https://ntrs.nasa.gov/search.jsp?R=19700023152 2018-07-24T22:17:04+00:00Z

General Disclaimer

One or more of the Following Statements may affect this Document

- This document has been reproduced from the best copy furnished by the organizational source. It is being released in the interest of making available as much information as possible.

- This document may contain data, which exceeds the sheet parameters. It was furnished in this condition by the organizational source and is the best copy available.

- This document may contain tone-on-tone or color graphs, charts and/or pictures, which have been reproduced in black and white.

- This document is paginated as submitted by the original source.

- Portions of this document are not fully legible due to the historical nature of some of the material. However, it is the best reproduction available from the original submission.

Produced by the NASA Center for Aerospace Information (CASI)

Hydrogen-Maser Time and Frequency Standard at Agassiz Observatory

Martin W. Levine and Robert F. C. Vessot

Presented at the
Symposium on Very Long-Baseline Interferometry
Charlottesville, Virginia
April 13-15, 1970

FACILITY FORM 602
N70-32463 (ACCESSION NUMBER) (THRU)
(PAGES) 1 (CODE)
CR-110689 (NASA CR OR TMX OR AD NUMBER) 16 (CATEGORY)

RECEIVED
NASA STI FACILITY
INPUT BRANCH
JUL 1970

April 1970

NSR-09-015-098

Smithsonian Institution
Astrophysical Observatory
Cambridge, Massachusetts 02138

004-20

ABSTRACT

A hydrogen maser was installed at the Harvard College Observatory/ Smithsonian 84-ft radio telescope in Harvard, Massachusetts, for VLBI experiments 14 to 15 October 1969 and 22 November to 14 December 1969. The maser is a compact unit, of relatively low power consumption, specifically designed for field use and readily transportable. A precision 5-MHz crystal oscillator, phase-locked to the maser, provides all frequency and time references for the VLBI receivers, recorders, and clocks. The maser was tuned against a rubidium standard by a rapid flux-switching technique; maser frequency resettability was estimated to be approximately $\pm 3 \times 10^{-13}$ with an overall accuracy of approximately $\pm 1 \times 10^{-12}$.

Loran-C was continuously monitored during the VLBI experiments, and the results of the Loran-C-maser comparisons are included.

Hydrogen-maser time and frequency standard at Agassiz observatory

Martin W. Levine and Robert F. C. Vessot
Smithsonian Astrophysical Observatory, Cambridge, Massachusetts 02138

1. INTRODUCTION

The hydrogen maser is generally acknowledged to be the ideal time and frequency standard for very long-baseline interferometry (VLBI), exhibiting a unique combination of superior short-term phase stability and freedom from drift. Further, the maser is a primary standard with unsurpassed resetability of frequency. In the past, the size, weight, and general awkwardness of the equipment have limited the hydrogen maser to fixed installations. For those observatories with only periodic or infrequent need for the phase stability of the maser standard, the investment required for the maser and its supporting electronics could not be justified.

The SAO hydrogen maser described in this paper was designed to be easily transportable and rugged enough to withstand the normal rigors of being moved from one station to another. It was trucked from Cambridge to Agassiz Station, Harvard, Massachusetts, for use during two VLBI experiments from 14 to 15 October and 22 November to 14 December 1969. The maser was installed at Agassiz, tuned against a rubidium-cell reference and operated as the master time and frequency standard for the Observatory for the duration of the observations. At the completion of the experiment, the maser was returned to Cambridge for use in other experiments. Figure 1 shows the SAO hydrogen maser on its shipping pallet enroute to Agassiz station.

The SAO hydrogen maser originated from a program sponsored by NASA Headquarters* to develop a clock for orbital applications for a precise test of the principle of equivalence [Kleppner et al., 1970]. NASA's Marshall Space Flight Center funded a second program** to build a small ground hydrogen maser incorporating the advanced technology of the space maser.

The design features of the SAO hydrogen maser are described in detail in a previous publication [Vessot et al., 1963]. Figure 2 is a cutaway illustrating the major assemblies of the maser. It should be noted that the design philosophy of this maser emphasizes good long-term frequency stability without the necessity for continuous automatic tuning. The cavity resonator is silver-coated CER-VIT, thermally compensated and enclosed in a two-stage oven. Provisions have been made for manual or automatic tuning using only a stable external reference oscillator and a digital-period counter. The tuning procedure, normally required only when the maser is moved to a new location, is detailed in a later section.

The short-term performance of the SAO hydrogen maser is summarized in Figure 3, which is a conventional $\sigma(\tau)$ plot. The RMS frequency stability as a function of averaging time is shown for quartz-crystal oscillators, and for rubidium and cesium standards, as well as for the maser. The same data are shown in Figure 4 in a form that might be more useful for VLBI experimenters. The RMS phase deviation as a function of observation time, normalized at 1 GHz, is shown for the four types of frequency standards.

3. MASER CLOCK SYSTEM

The hydrogen maser is an active oscillator with an output of approximately -95 dbm at 1420 MHz. A 5-MHz crystal oscillator is phase-locked to the maser signal to provide standard frequencies at levels useful to the clock

---

*Contract NASW-1337.

**Contract NAS 8-2604.

system. A simple dual-conversion receiver is used to generate the phase-locking signals in conjunction with a synthesizer to set the time scale. The synthesizer is not an integral component of the maser clock system; the instrument used in this experiment was borrowed from the Agassiz station.

The entire maser clock system is shown in block diagram in Figure 5. The maser output at 1420 MHz is fed to a balanced crystal diode mixer where it is hetrodyned with the 1400-MHz output of a 5-MHz to 1400-MHz (or ×280) multiplier. The first IF signal at 20.405 MHz is amplified by 40 db and then hetrodyned with the 20-MHz output of the ×4 multiplier. The second IF signal, at 405 kHz, is amplified by approximately 50 db and fed to one input of a balanced phase detector. The reference signal for the phase detector is supplied by a Hewlett-Packard 5102A digital synthesizer. The synthesizer is normally set at 405,794.3 Hz to approximate the UTC time scale. The output of the phase detector is used to phase lock a precision 5-MHz quartz-crystal oscillator through a very high-gain operational integrator. Double integration is incorporated into the phase-locked loop so that the phase tracking error (or velocity error) is very nearly zero. The time constant of the integrator is selected so that the closed-loop response is critically damped and the closed-loop bandwidth is approximately 10 Hz. The output of the phase-locked 5-MHz oscillator is used to drive the ×280 and ×4 multipliers and the digital synthesizer so that the entire maser clock system is phase-coherent. A 1-MHz signal, derived from internal dividers in the crystal oscillator, is used to drive the VLBI timing system.

The Agassiz VLBI installation includes a Hewlett-Packard 5065A rubidium standard. This instrument provides the 5-MHz quartz-crystal oscillator used in the hydrogen-maser clock system. The rubidium-cell reference loop in the 5065A is normally disabled and, as shown in Figure 5, the quartz oscillator is slaved to the maser. Using the rubidium standard in this fashion has a number of advantages. The cost of an additional quartz oscillator is eliminated, a stable backup standard is always available on-line, and the tuning of the maser is simplified. To change from hydrogen-maser operation to rubidium requires only the turn of a switch to transfer the electronic-frequency

control of the quartz oscillator from the external maser circuitry to the internal rubidium cell. The amplitude of the clock signals at 5 MHz, 1 MHz, and 100 kHz is not affected by the changes in the phase-lock circuitry, nor are any interconnection changes required.

4. TUNING THE HYDROGEN MASER

The oscillation frequency of a hydrogen maser is "pulled" by the maser cavity resonator. The amount of pulling is a function of cavity detuning and the linewidth of the atomic resonance [Vanier and Vessot, 1964]:

$$\nu = \nu_H + \left(\frac{\nu_c - \nu_H}{\nu_c} Q - \frac{0.29\, \bar{v}\, a_0^2\, \hbar\, V_c}{Q\, \mu_0^2\, \eta\, V_b} \right) \Delta\nu_\ell \qquad (1)$$

where

ν = maser oscillation frequency.

ν_H = center frequency of the atomic resonance line.

ν_c = center frequency of the cavity resonance.

Q = quality factor of the cavity.

$\bar{v}$ = mean velocity of the hydrogen atoms.

a_0 = first Bohr orbit radius.

$\hbar$ = Planck's constant divided by 2π.

μ_0 = Bohr magneton.

$\bar{V}_c$ = volume of the cavity.

V_b = volume of the storage bulb.

η = ratio of average electromagnetic field energy density in the storage bulb to average energy density over the entire cavity.

$\Delta\nu_\ell$ = atomic resonance linewidth.

If the cavity is tuned to a frequency ν_{c0} such that

$$\nu_{c0} = \nu_H \left[\frac{1}{1 - \frac{0.29 \bar{v} a_0^2 \hbar V_c}{Q^2 \mu_0^2 \eta V_b}} \right] \tag{2}$$

then the term in brackets in equation (1) vanishes and

$$\nu = \nu_H \quad . \tag{3}$$

The maser oscillates at the center of the atomic resonance line.

The cavity is tuned to ν_{c0} by modulating the flux of atoms entering the storage bulb. It can be shown that the spin-exchange contribution to the line width is directly proportional to the flux, and referring to equation (1), when the cavity is at the tuning point ν_{c0}, then ν is independent of line width and therefore also independent of the total hydrogen flux.

The maser can be tuned by using a frequency reference must less stable than that of the maser itself. The technique used is to switch the hydrogen flux periodically between a very low level, near threshold, and a very high level and to look for corresponding changes in the oscillation frequency of the maser. The flux level must be modulated as rapidly as possible to minimize the phase-noise contribution from the reference oscillator. The phase-noise power spectral density of quartz-crystal oscillators, rubidium standards, and cesium standards decreases as the offset from the carrier frequency is increased.

The effect of linear frequency drift in the reference standard can be eliminated by using an algorithm devised by L. C. Cutler (private communication, 1968). The period of the beat between the maser and the reference oscillator is measured an odd number of times, alternately at low and at high flux. The measurements at low flux are assigned a negative sign, the

measurements taken at high flux a positive sign. The first and last measurements are divided by two and all the measurements are then summed algebraically. This residue,

$$N_R = \frac{-(a_1 + a_n)}{2} + \sum_{k=2}^{n-1} (-1)^k a_k \quad , \tag{4}$$

is a measure of the cavity detuning. It can be readily shown that the value of the residue is unaffected by linear frequency drift of the reference.

The maser at Agassiz was tuned against the HP 5065A rubidium standard by the procedure outlined in the previous paragraph. Control of the atomic hydrogen flux into the maser storage bulb is achieved by varying the RF power level in the hydrogen dissociator. The power level can be switched between two preset values by means of a manual control on the front panel or by a logic signal from an external controller. The output of the phase detector (Figure 3) was disconnected from the 5065A rubidium standard and temporarily connected to a digital frequency counter set to read 10-period averages. The 5065A was slaved to its internal rubidium-cell reference to provide maximum stability. The frequency of the digital synthesizer was offset by 1.2 Hz to yield a beat period of 0.833 sec at the phase-detector output for a 10-period measurement interval of 8.333 sec.

Figure 6 shows the results of a tuning run at Agassiz taken just before the VLBI observations. The flux switching was done manually with the front-panel control on the maser. The data, eleven 8.3-sec measurements for each point on the curve, were recorded by a digital printer. A desk calculator was then used to calculate N_R from equation (4).*

The precision of this tuning procedure is estimated to be approximately $\pm 7 \times 10^{-13}$. That is, the maser can be reset to the same oscillation frequency with a standard deviation of about one millihertz. The actual oscillation frequency, the mean of a large number of such measurements, is a

*The entire process has since been automated by the addition of an index register and a reversible counter.

function of the bulb wall shift, the second-order doppler shift in the bulb, and the magnetic field. These effects can be measured or calculated and are discussed in the next section.

5. MASER ACCURACY AND LORAN-C

The wall shift of the SAO hydrogen maser has been directly measured against the Harvard University reference maser, the SAO reference maser, and a maser at the National Bureau of Standards The second-order doppler was calculated for the known temperature of the storage bulb, and the magnetic field was estimated from the measured frequency of the Zeeman transition. The oscillation frequency of the maser is determined as follows [Hellwig et al., 1970]:

Unperturbed hydrogen frequency in terms of the cesium second:	1,420,405,751.768 Hz	± 0.003
Conversion for A1 to UTC:	42.612	
Second-order doppler:	- 0.063	
Measured wall shift:	- 0.020	
Magnetic field shift:	+ 0.001	
Total (ν_H in UTC time scale):	1,420,405,794.298 Hz	± 0.003

The digital-synthesizer resolution was limited to 0.1 Hz, so the closest synthesizer setting was 405,794.3 Hz. We thus introduced a known "error" of -0.002 Hz; the VLBI timing-system clocks should have run 1.4 parts in 10^{-12} fast with respect to LORAN-C.

LORAN-C timing pulses were continuously monitored at Agassiz from 24 November to 15 December 1969. The Agassiz VLBI timing system gained 6 msec with respect to LORAN-C, while the USNO Daily Phase Values predict a gain of 1.6 μsec. The difference of 4.4 μsec for a 21-day period

corresponds to a local clock 2.42×10^{-12} high in frequency. Since it is known that the Agassiz clock was 1.4×10^{-12} low owing to the granularity of the synthesizer, the total average discrepancy between the maser and LORAN-C was $2.42 \times 10^{-12} + 1.4 \times 10^{-12}$ or 3.8×10^{-12}.

The LORAN-C transmissions are monitored and steered by the U. S. Naval Observatory. The USNO establishes and maintains a coodinated time scale based on the average of a large number of clock systems in this country and abroad. The unperturbed hydrogen frequency shown in an earlier paragraph was measured against the ensemble of cesium clocks at the National Bureau of Standards in Boulder, Colorado. The discrepancy of 3.8 parts in 10^{-12} observed in this experiment lies well within the combined error limits of the LORAN-C time scale and the precision of the hydrogen-cesium intercomparison at NBS, Boulder.

6. VLBI TIMING SYSTEM

The hydrogen maser clock provides the 1-MHz signal to drive the VLBI timing system shown in Figure 7. The SAO digital clock accumulates and displays the time of day with a resolution of 1 μsec. The digital clock also generates a 1-pps signal for the SAO digital delay generator. The delay generator is used to preset the LORAN-C propagation delay and to determine the time differential between a portable clock and the system clock.

Time of day is set into the VLBI timing system by means of either a portable quartz-crystal clock or LORAN-C transmissions. The digital clock is designed so that it can be directly reset to the 1-pps portable-clock signal. Setting the digital clock to the LORAN-C epoch is accomplished visually by means of an oscilloscope triggered by the LORAN rate generator.

The DEMAND inputs of the timing system freeze the clock display at the time of a demand input pulse. The LORAN rate generator, the delayed 1 pps, a VLF 1-pps signal, and the VLBI event encoder can be used to demand the clock.

The complete VLBI timing system is described in greater detail elsewhere in this issue (Michelini).

7. CONCLUSION

For VLBI observations of more than a few minutes or for observations at wavelengths less than 5 cm, the hydrogen maser is the only satisfactory frequency standard. The SAO hydrogen maser has demonstrated that it can be used routinely and reliably for VLBI. The ease with which the maser can be transported makes feasible the fabrication of complete traveling backends for radio telescopes so that maximum utilization of existing observatories and baselines can be obtained.

REFERENCES

Cutler, L. S., and R. Vessot (1968), Present status of clocks and frequency standards, NEREM Record, pp. 68-69.

Hellwig, H., R. Vessot, M. Levine, P. Zitzewitz, and H. Peters (1970), Determination of the unperturbed hydrogen hyperfine transition frequency with the hydrogen maser, Transactions of the IEEE—Instrumentation (in press).

Kleppner, D., R. Vessot, and N. Ramsey (1970), An orbiting clock experiment to determine the gravitational red shift, in Astrophysics and Space Science, vol. 6, pp. 13-32, D. Reidel Publ. Co., Dordrecht-Holland, Amsterdam.

Vanier, J., and R. Vessot (1964), Cavity tuning and pressure dependence of frequency in the hydrogen maser, Appl. Phys. Lett., 4, pp. 123-124.

Vessot, R., M. Levine, L. Cutler, M. Baker, and M. Mueller (1968), Progress in the development of hydrogen masers, in Proceedings, 22nd Annual Symposium on Frequency Control, Atlantic City, New Jersey.

List of Figure Captions

Fig. 1. The SAO hysrogen maser prepared for shipment from Cambridge to Harvard, Massachusetts. The phase-lock receiver can be seen to the rear of the maser.

Fig. 2. A section through the SAO hydrogen maser showing the major sub-assemblies. This unit, which constitutes the maser oscillator, is mounted with the electronic support systems in a steel cabinet 42" × 22" × 22".

Fig. 3. The RMS frequency stability of the hydrogen maser as a function of observation time. The characteristics of typical quartz-crystal, rubidium, and cesium standards are shown for comparison.

Fig. 4. The data of Fig. 3 are replotted to express directly the phase stability of the four types of frequency standards as a function of observation time. All the data have been normalized to 1 GHz [from Cutler and Vessot, 1968].

Fig. 5. The maser clock system in block diagram form. The rubidium cell in the Hewlett-Packard 5065A is disabled, and only the internal quartz-crystal oscillator is used.

Fig. 6. Data from a tuning run of the hydrogen maser using the rubidium standard as a reference.

Fig. 7. The VLBI timing system shown controlled by the hydrogen-maser clock system. The LORAN-C capability permits continuous monitoring of the epoch.

Figure 1

Figure 1

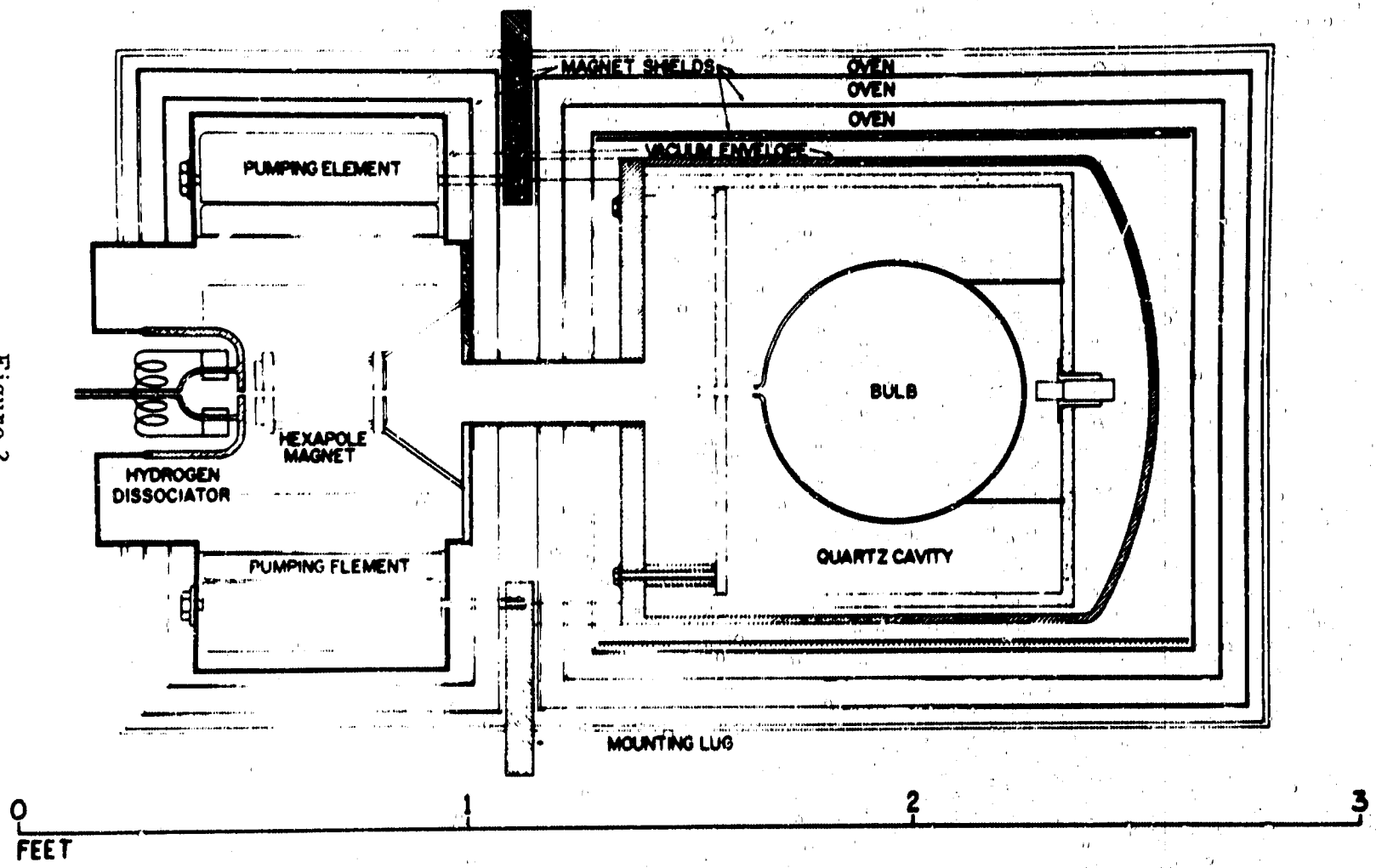

ATOMIC HYDROGEN MASER for SATELLITE EXPERIMENTS

Figure 2

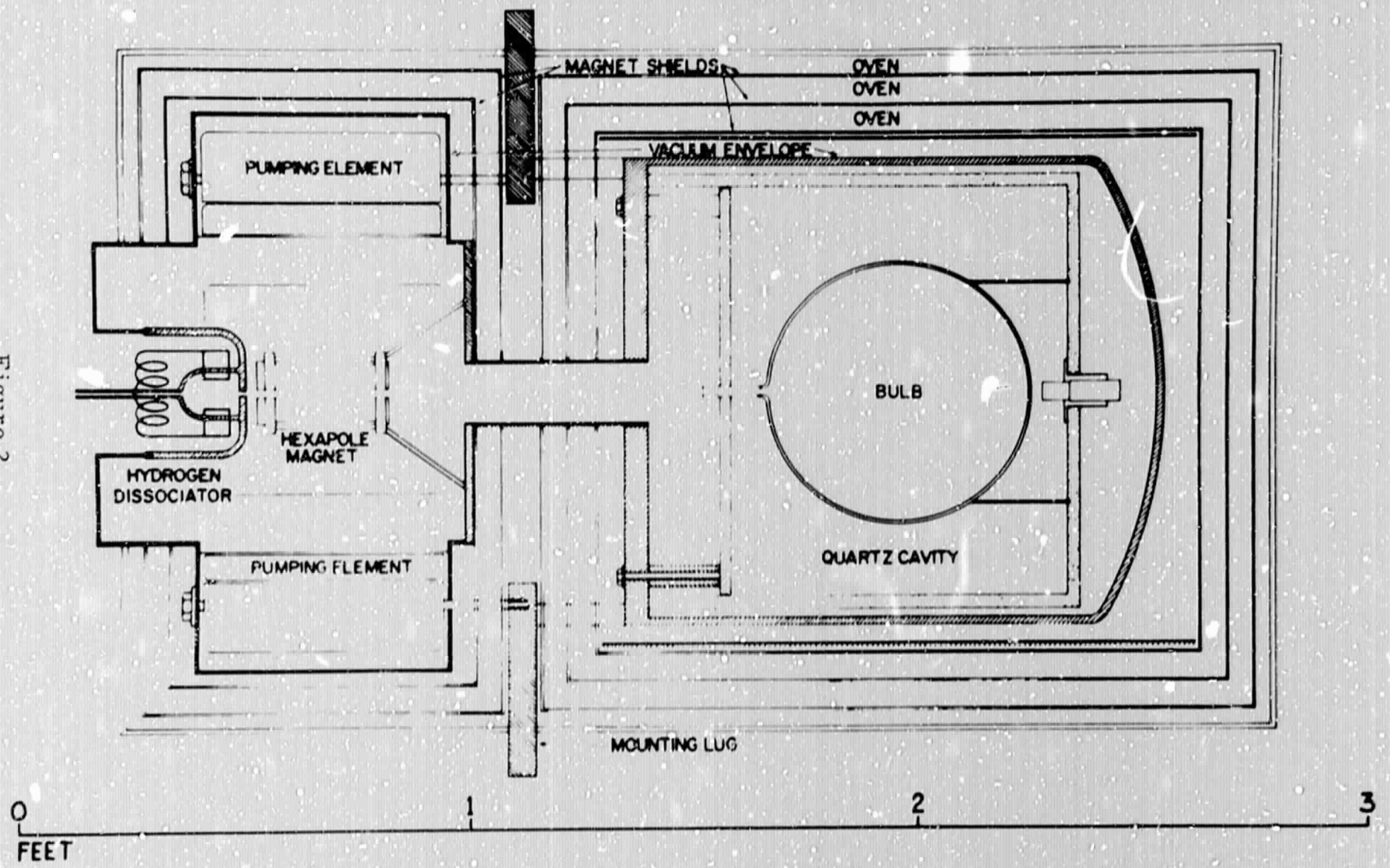

ATOMIC HYDROGEN MASER *for* SATELLITE EXPERIMENTS

Figure 2

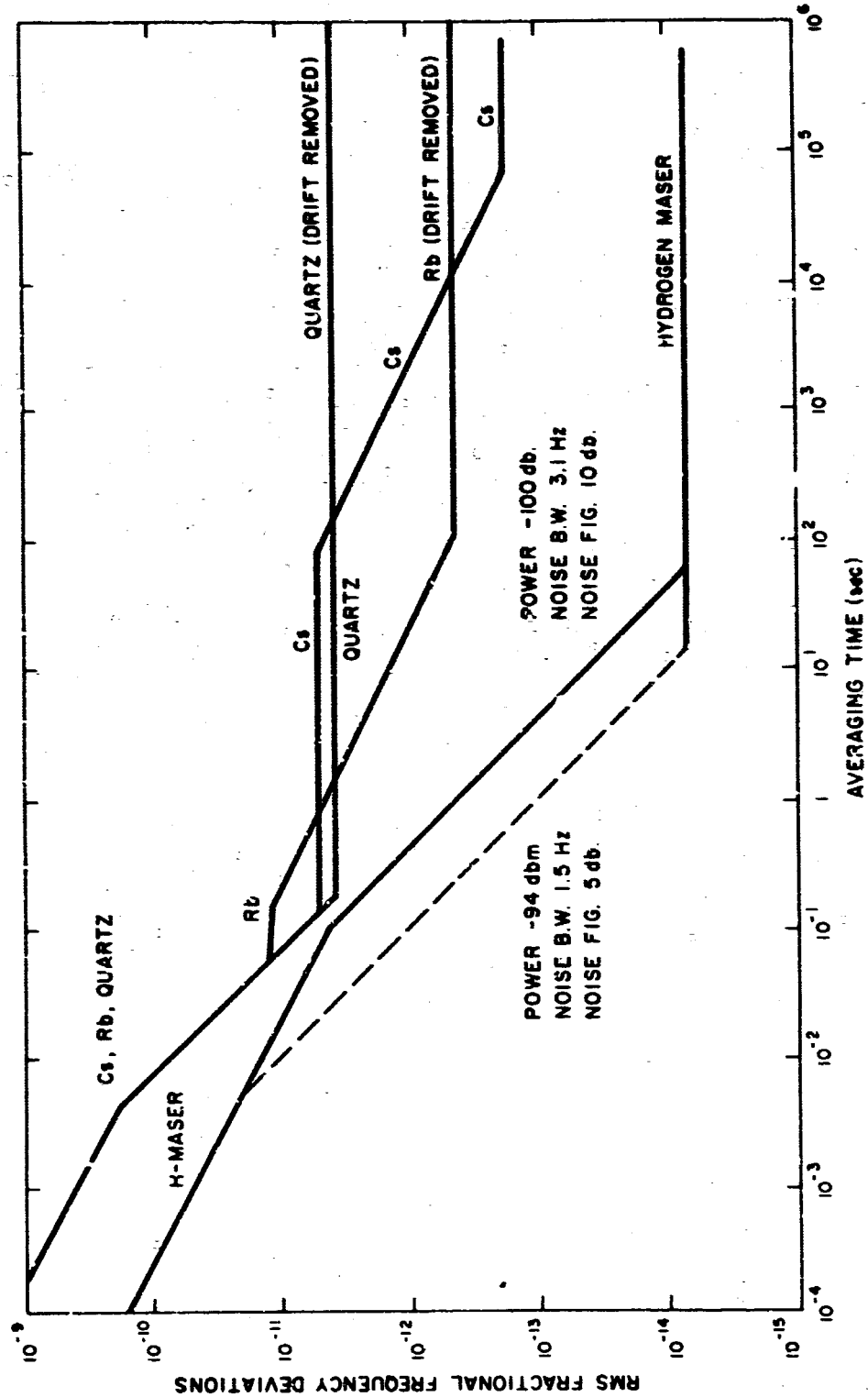
Cs, Rb, QUARTZ
H-MASER
Rb
Cs
QUARTZ
QUARTZ (DRIFT REMOVED)
Cs
Rb (DRIFT REMOVED)
Cs
HYDROGEN MASER
POWER -100 db.
NOISE B.W. 3.1 Hz
NOISE FIG. 10 db.
POWER -94 dbm
NOISE B.W. 1.5 Hz
NOISE FIG. 5 db.
RMS FRACTIONAL FREQUENCY DEVIATIONS
AVERAGING TIME (sec)

Figure 3

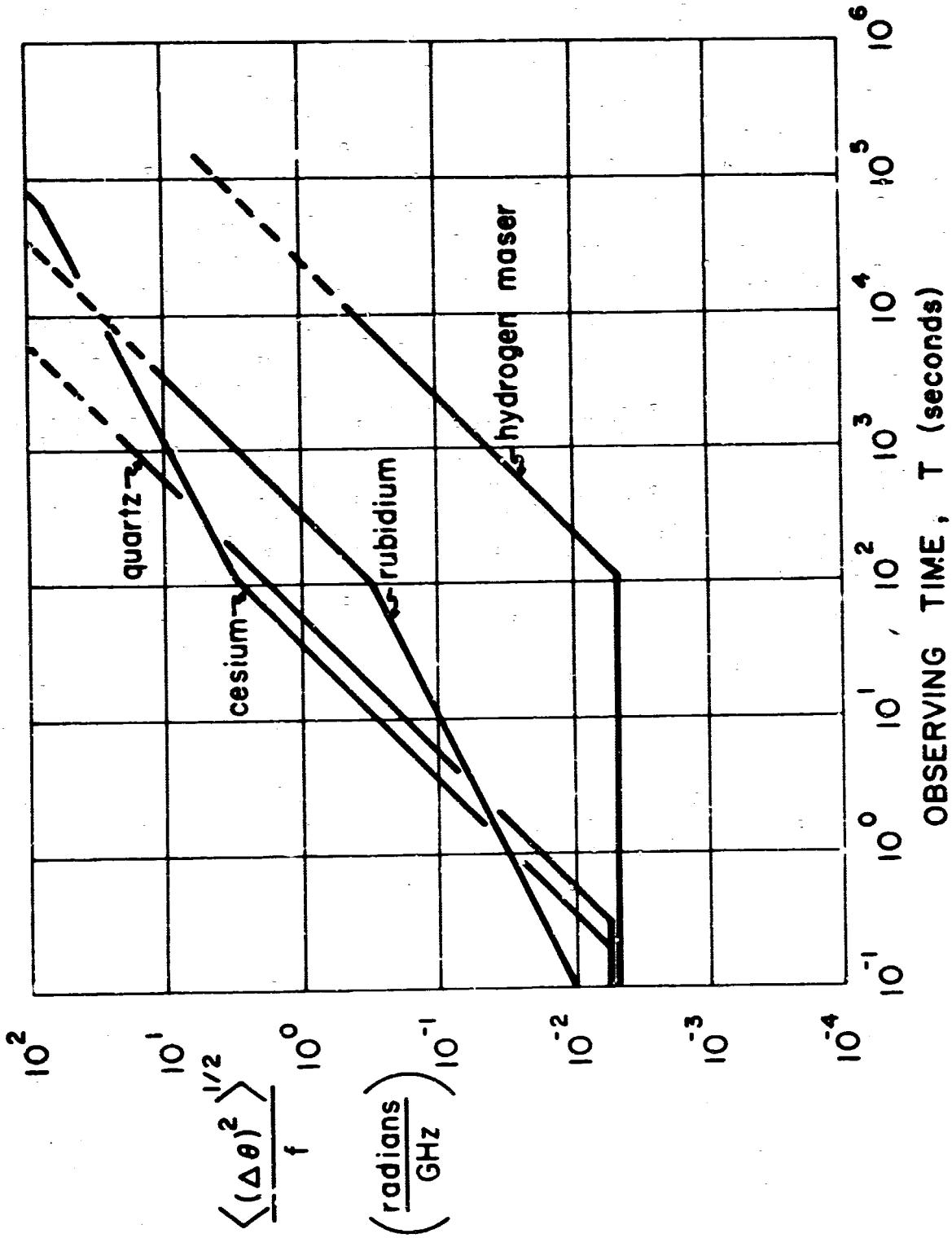
quartz
cesium
rubidium
hydrogen maser
OBSERVING TIME, T (seconds)
10^{-1}
10^{0}
10^{1}
10^{2}
10^{3}
10^{4}
10^{5}
10^{6}
$\frac{\langle(\Delta\theta)^2\rangle^{1/2}}{f}$
$\left(\frac{\text{radians}}{\text{GHz}}\right)$
10^{2}
10^{1}
10^{0}
10^{-1}
10^{-2}
10^{-3}
10^{-4}

Figure 4

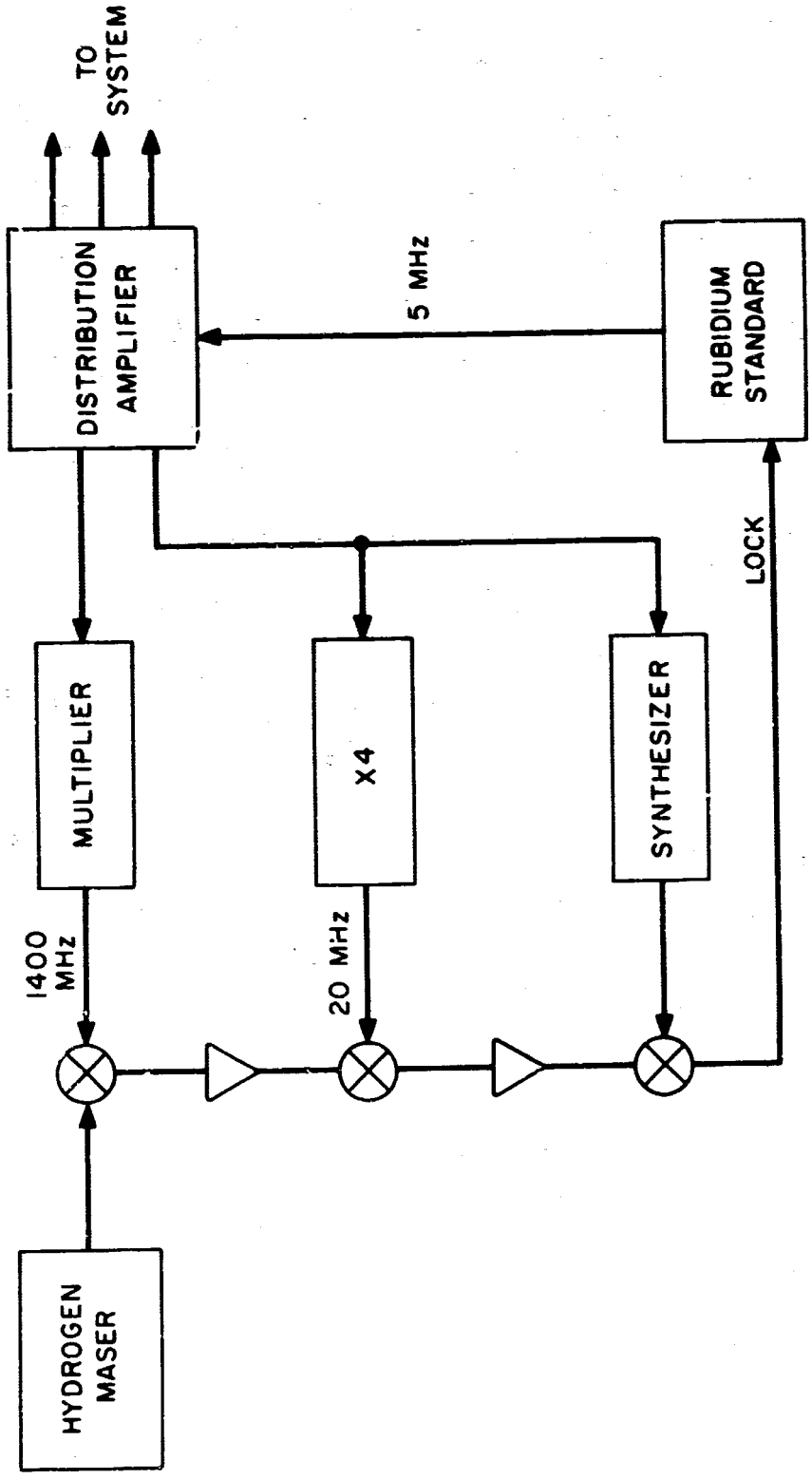
TO SYSTEM
DISTRIBUTION AMPLIFIER
5 MHz
RUBIDIUM STANDARD
LOCK
MULTIPLIER
X4
SYNTHESIZER
1400 MHz
20 MHz
HYDROGEN MASER

Figure 5

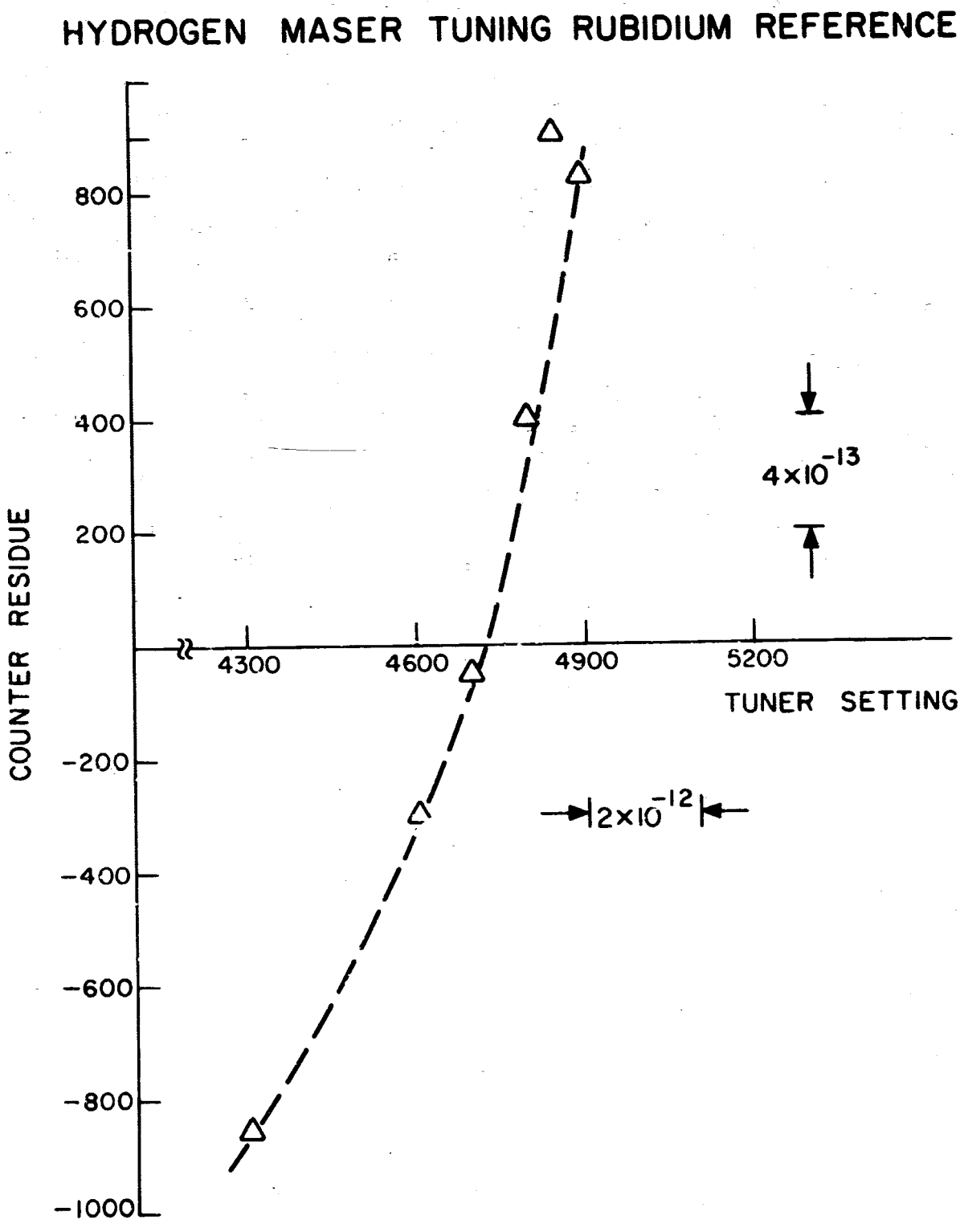
HYDROGEN MASER TUNING RUBIDIUM REFERENCE
COUNTER RESIDUE
800
600
400
200
-200
-400
-600
-800
-1000
4300
4600
4900
5200
TUNER SETTING
4×10^-13
2×10^-12

Figure 6

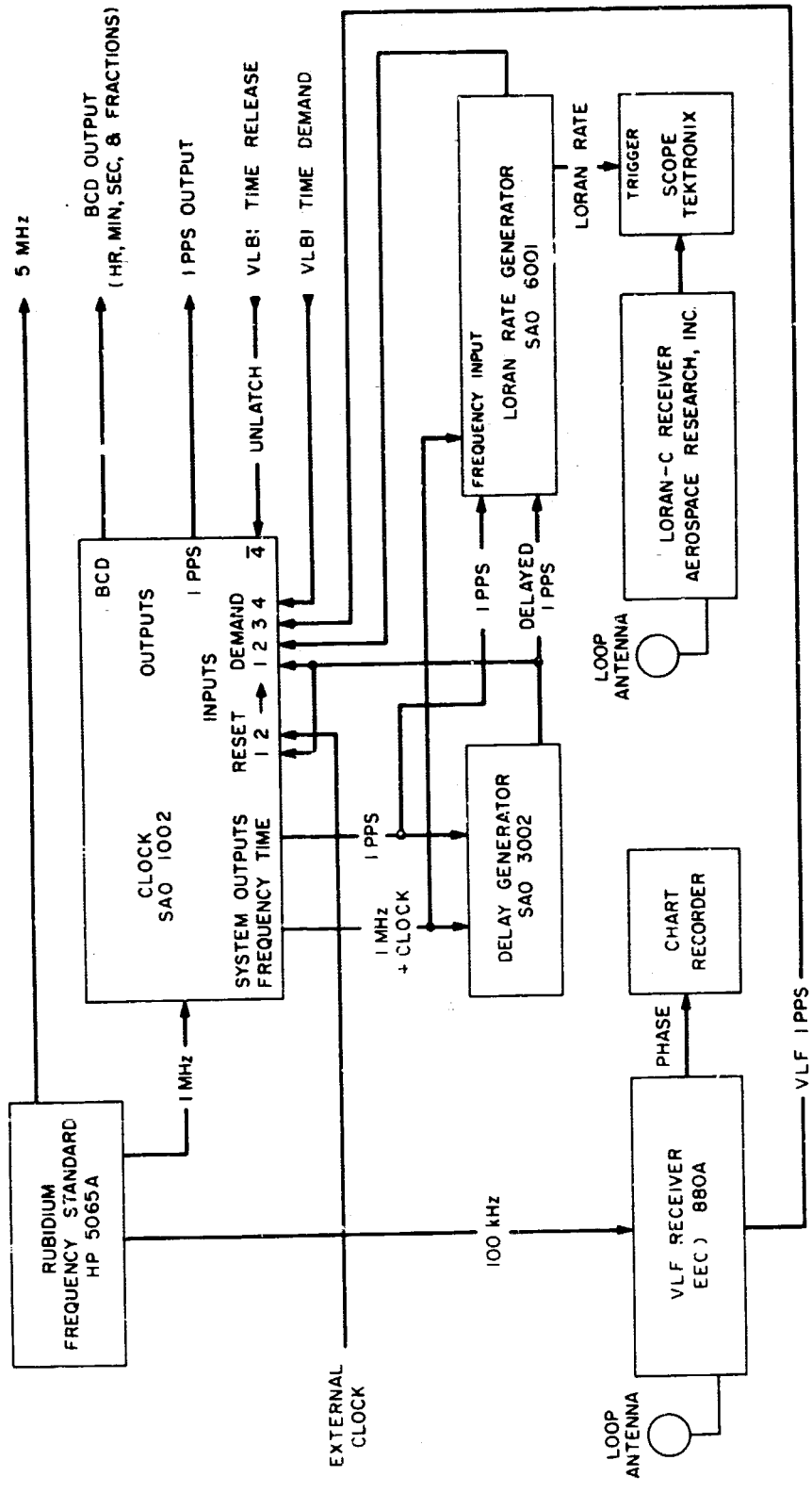
5 MHz
BCD OUTPUT
(HR, MIN, SEC, & FRACTIONS)
1 PPS OUTPUT
VLBI TIME RELEASE
VLBI TIME DEMAND
UNLATCH
BCD
OUTPUTS
1 PPS
INPUTS
DEMAND
1 2 3 4
4
RESET
1 2
CLOCK
SAO 1002
SYSTEM OUTPUTS
FREQUENCY TIME
1 MHz
RUBIDIUM
FREQUENCY STANDARD
HP 5065A
1 MHz
+ CLOCK
1 PPS
EXTERNAL
CLOCK
100 kHz
FREQUENCY INPUT
LORAN RATE GENERATOR
SAO 6001
LORAN RATE
1 PPS
DELAYED
1 PPS
DELAY GENERATOR
SAO 3002
TRIGGER
SCOPE
TEKTRONIX
LORAN-C RECEIVER
AEROSPACE RESEARCH, INC.
LOOP
ANTENNA
CHART
RECORDER
PHASE
VLF RECEIVER
EEC) 880A
LOOP
ANTENNA
VLF 1 PPS

Figure 7