General Disclaimer

One or more of the Following Statements may affect this Document

- This document has been reproduced from the best copy furnished by the organizational source. It is being released in the interest of making available as much information as possible.

- This document may contain data, which exceeds the sheet parameters. It was furnished in this condition by the organizational source and is the best copy available.

- This document may contain tone-on-tone or color graphs, charts and/or pictures, which have been reproduced in black and white.

- This document is paginated as submitted by the original source.

- Portions of this document are not fully legible due to the historical nature of some of the material. However, it is the best reproduction available from the original submission.

Produced by the NASA Center for Aerospace Information (CASI)

Copy No. 87

91

NASA PROGRAM APOLLO WORKING PAPER NO. 1196

FLIGHT ANALYSIS OF THE APOLLO PROPULSION SYSTEMS

AUG 1970
RECEIVED
NASA STI FACILITY
INPUT BRANCH

FACILITY FORM 602

N70-35710
(ACCESSION NUMBER)
40
(PAGES)
TMX 64427
(NASA CR OR TMX OR AD NUMBER)
(THRU)
1
(CODE)
28
(CATEGORY)

[redacted]

NATIONAL AERONAUTICS AND SPACE ADMINISTRATION

MANNED SPACECRAFT CENTER

HOUSTON, TEXAS

March 8, 1966

NASA PROGRAM APOLLO WORKING PAPER NO. 1196

FLIGHT ANALYSIS OF THE APOLLO PROPULSION SYSTEMS

Prepared By

Joe M. Thames Jr.

Joe M. Thames, Jr.
AST, Propulsion Analysis Section

AUTHORIZED FOR DISTRIBUTION

Warren Gillespie, Jr.
for Maxime A. Faget
Assistant Director for
Engineering and Development

NATIONAL AERONAUTICS AND SPACE ADMINISTRATION

MANNED SPACECRAFT CENTER

HOUSTON, TEXAS

March 8, 1966

NASA PROGRAM APOLLO WORKING PAPER NO. 1196

FLIGHT ANALYSIS OF THE APOLLO PROPULSION SYSTEMS

Prepared By

Joe M. Thames Jr.

Joe M. Thames, Jr.
AST, Propulsion Analysis Section

AUTHORIZED FOR DISTRIBUTION

Warren Gillespie, Jr.
for Maxime A. Faget
Assistant Director for
Engineering and Development

NATIONAL AERONAUTICS AND SPACE ADMINISTRATION

MANNED SPACECRAFT CENTER

HOUSTON, TEXAS

March 8, 1966

PRECEDING PAGE BLANK NOT FILMED.

CONTENTS

Section	Page
INTRODUCTION	1
Discussion of the Problem	1
SCOPE OF FLIGHT ANALYSIS	2
Aims and Objectives	2
Preflight objectives	2
Inflight objectives	2
Postflight objectives	3
Application and Synopsis of the Flight Analysis Method	3
Performance applications	3
Malfunction applications	3
Method synopsis	4
METHOD OF FLIGHT ANALYSIS	7
Data Adjustment by Weighted Least Squares	7
Best Estimate of Performance Parameters	10
Process Model	10
Flight process model	11
Propulsion system model	12
Trajectory Specific Impulse	14
Method of determination of I_{sp}	16
Additional Data Parameters to be Matched	18
Discussion of Apollo Applications	18

PRECEDING PAGE BLANK NOT FILMED.

CONTENTS

Section	Page
DATA PROCESSING	19
Computer Programing Scheme	20
Empirical model development	20
Flight analysis programs	22
Flight Time Data Processing	22
HARDWARE REQUIREMENTS	23
Computer Communication Network	23
Flight analysis computer	24
Analysis control computer	24
PROGRESS AND PLAN	25
Current Status	25
Threshold engineering work	25
Computer program development	25
Contracted Task	25
Subtask I - Ground test performance analysis	26
Subtask II - Preflight performance prediction	26
Subtask III - Flight evaluation	26
Flight Analysis Plan	26
Analysis program development	27
Computer hardware and executive program development	27
Inflight analysis preparation	27
REFERENCES	28

FIGURES

Figure		Page
1	Best estimate of propulsion parameters	29
2	Propulsion system schematic	30
3	Logic of nonlinear propulsion system model	31
4	Scheme of required computer programs	32
5	Communication network for inflight propulsion analysis	33
6	Special purpose computer configuration	34
7	1966 schedule for flight analysis preparation	35

FLIGHT ANALYSIS OF THE APOLLO PROPULSION SYSTEMS

By Joe M. Thames, Jr.

ABSTRACT

This paper presents a master plan for the evaluation of the Apollo propulsion systems prior to, during, and after actual flight tests. Included is a description of the methods involved and a plan for the implementation of these methods.

The proposed approach is to apply proven postflight evaluation techniques to the analysis of the Apollo propulsion systems during flight. The method of analysis (i.e., by reconstructing the firing phase of the mission) identifies and resolves malfunctions and provides accurate performance estimates. Although the method was perfected and utilized extensively in the ballistic missile program, it has never been implemented in flight time.

The experience and engineering innovation reflected in this paper belong predominately to the Propulsion Performance Analysis and Propulsion Systems Analysis Sections of TRW Systems, headed by D. W. Vernon and C. S. Powers.

FLIGHT ANALYSIS OF THE APOLLO PROPULSION SYSTEMS*

By Joe M. Thames, Jr.

INTRODUCTION

The flight analysis of the Apollo propulsion systems is an extremely complex procedure. Involved in the analysis are detailed considerations of vehicle trajectory, ground test data, flight test data, and instrumentation.

Propulsion systems, being quite active, are vulnerable to many malfunction possibilities. As these systems supply all of the required velocity changes, such malfunctions are likely to be mission-critical. It is therefore necessary that system performance be carefully monitored and malfunctions readily evaluated. Extensive analysis capability will be required to accomplish these objectives. This paper presents a logical plan for the preparation of such capability.

Discussion of the Problem

Analysts performing flight evaluations of the main propulsion systems are particularly fortunate in that the output of these systems (the vehicle trajectory) is directly detectable. Therefore, the output information can be fed back into the analysis to refine the results. Both the input (propulsion parameters) and the output are known, but a numerical calculation (simulation) involving the input parameters would not necessarily yield the same output. Therefore, the problem is mathematically overspecified. The paramount question then becomes: How well are the input parameters known? Since there is much more confidence in observed trajectory data than in the measured propulsion data, the problem is inverted. It may be restated as: Starting with the telemetered input data and the telemetered output data, find the best estimate of the input that will give the same output. The results of the refined analysis are aptly termed as the "best estimate of the propulsion parameters," and they arise as the solution to the indirect mathematical problem.

---

*Manuscript submitted September 1, 1965.

The method of analysis involves a weighted least squares technique. It makes use of all available data (i.e., both static test and flight test). Included are the physical laws which describe the behavior of the propulsion systems and their interactions with the spacecraft.

From such an analysis, the following advantages are derived:

(1) Quantities of data from different and potentially conflicting instruments are digested, the differences impartially resolved (with due reference to the applicable physical laws), and data discrepancies flagged.

(2) In addition to resolving the problem of hardware malfunction versus instrumentation malfunction, an accurate determination of performance degradation or off-nominal behavior is obtained, accompanied by statements on the accuracy of these results.

(3) Predictions of ensuing system behavior are obtained (e.g., remaining velocity capability) in conjunction with statements of the accuracy of these predictions.

SCOPE OF FLIGHT ANALYSIS

Such analyses may be performed: (a) prior to a flight for performance prediction, (b) during a flight for performance and malfunction analysis, and (c) after a flight for performance and malfunction analysis and subsequent feedback into system development.

Aims and Objectives

Preflight objectives.- For the preflight analysis, the propulsion output would be supplied by an analytical trajectory simulator containing a propulsion feedback model. The objective would be to predict (using the most current information) the performance of the propulsion systems for particular missions. Such predictions would be used to refine the trade-off between propellant load and payload.

Inflight objectives.- The inflight analysis would utilize propulsion and trajectory data telemetered and reduced in real time to evaluate propulsion firings in a post-event fashion. The final results of the analysis, which would lag the actual event by only a few minutes, would include: (a) an accurate determination of subsystem performance degradation, (b) malfunction detection and resolution, and (c) an accurate prediction of subsystem performance later in the mission. These

results would be used to re-evaluate the mission plan and, if necessary, select possible alternatives. This information would be supplied to the flight controllers who formulate inflight decisions.

Postflight objectives.- The postflight analysis would be a more sophisticated version of the inflight analysis. All available data would be utilized, and the complete mission would be reconstructed and evaluated several times. The results would be used to establish propulsion performance, to evaluate system malfunctions, and to update empirical models. Information feedback into the system development programs and future mission planning would be the primary objective.

Application and Synopsis of the Flight Analysis Method

Performance applications.- The propulsion performance for a missile or spacecraft is usually established from the results of static tests. The initial estimates of propulsion system parameters thus obtained usually indicate flight performance to an accuracy of only about 3 percent. However, propulsion parameters calculated directly from telemetered flight measurements decrease accuracy - because such calculations (and subsequent estimates) are based on static test relationships alone. However, incorrect estimates may be corrected, for individual propulsion systems, by using high quality trajectory data as well as the telemetered system data collected during the flight.

Experience on past missile programs has indicated that performance degradation or off-nominal behavior are much more probable events than outright malfunctions and are often more critical. Off-nominal specific impulse or mixture ratio, for example, can seriously compromise mission performance unless detected and either corrected, as in the case of a poorly operating propellant utilization (PU) system, or compensated for (by a change in mission plan). In addition, many hard-to-detect malfunctions, such as propellant leaks, affect vehicle performance in ways similar to performance degradations. These can be detected and their future effects on performance assessed by flight analysis.

Also, predictions of certain performance parameters, based on static test data, have been generally in error by amounts significantly greater than the dispersions assigned to them. Actual dispersions are typically affected by variations in propellant loading, tank pressurization, propellant temperatures, and PU system performance, as well as by engine performance. In many cases these errors have constituted biases which can be accurately determined by flight analysis.

Malfunction application.- Malfunctions may be grouped by relative ease of detection. Such a grouping is useful for the purpose of

defining the detection and correction capability required. Certain types of malfunctions may be detected readily by the astronaut onboard the spacecraft, for example, nonignition of an engine on firing command. Other types of malfunctions may require such immediate action as to necessitate automatic correction capability.

The detection of a wide variety of malfunctions, however, requires special instrumentation and a detailed analysis of the resulting data. The extent of analysis required is governed mostly by the probability of malfunction in the detecting instrumentation. In the case of single-instrument detection of malfunctions, flight test experience has shown that it is generally more likely that the detecting instrument will malfunction, rather than the hardware being monitored. Such an instrument malfunction may lead to a condition of no information, on a given subsystem, or to a worse condition of erroneous information. For a large class of malfunctions in the propulsion subsystems, however, the physical laws governing the operation of these systems combined with sophisticated data analysis techniques can be used to resolve the problem of separating actual hardware malfunctions from instrumentation malfunctions.

These same techniques are required for the detection of performance degradations which are often subtle and jeopardize the mission. A description of such applications (for the detection of malfunctions and performance degradations during flight) will be given in the next section.

Distinguishing between two or more different possible malfunctions requires redundant measurements. At its simplest, an example of redundancy is found in recurrent sampling of a measurement as a function of time. Measurements of a slowly varying function which are telemetered during a period of poor or noisy reception can be replaced by data obtained prior to and subsequent to such a noisy period. This type of redundancy tends to alleviate the problems of sporadically poor telemetry.

Measurement redundancy is usually considered as that which is obtained by the use of multiple instruments. Although somewhat common in ground testing, redundant instruments are virtually never used in flight except for critical measurements.

Whatever the type of redundancy, its utilization requires a means of assigning relative weight to each measurement. This is usually accomplished by engineering judgment.

Method synopsis.- A better method than simple redundancy is the use of weighted least squares adjustments in which the various measurements are assigned relative weights in accordance with expected accuracy.

This method has the advantage of being able to impartially balance large numbers of different types of measurements against one another and to provide not only estimates of performance parameters but also assessments of their accuracy. It has the disadvantage of requiring prior knowledge of the relative accuracy of various measurements. Intelligent mechanization of the weighted least squares technique provides the best assessment of performance, as well as an efficient digestion of massive quantities of data, thereby relegating to the analyst a limited set of data which he can effectively evaluate. A contingency check is automatically accomplished by comparing the various measurements at the different locations. Adjustments are made for those errors which were properly modeled before the flight. Hence, unexpected discrepancies may be made readily apparent.

The nature of the weighted least squares solution may be seen by considering the following set of circumstances. First, let there be several different functions of time, $Z_p(t)$, where $p = 1, 2, \ldots, m$. Let $Z_p(t)$ be described by a known function of $t, y, y_2, \ldots, y_n$ where the y_j $(j = 1, 2, \ldots, n)$ are unknown constants. Let there be N measurements, $Z_p^*(t_i)$, such that:

$$Z_p^*(t_i) = Z_p(t_i) + \varepsilon_{p_i}$$

A further condition is that ε_{p_i}, the difference between the measured value $Z_p^*(t_i)$ and the true value computed using the analytical function, $Z_p(t_i)$, can be described statistically as:

$$\langle \varepsilon_{p_i} \rangle = 0$$

$$\langle \varepsilon_{p_i}^2 \rangle = \sigma_{p_i}^2$$

where $\langle\ \rangle$ denotes the expected value. Restated, the requirement is that ε_p is a "noise" type of error, statistically describable as

having an expected value of zero and a variance of $\sigma^2_{p_i}$. If the number of parameters, y_j, required for computation of $Z_p(t)$ is less than the number of measurements, N, there is redundancy; that is, the solution for the n values for the y_j's is overdetermined. A condition may be imposed that the quadratic form

$$\chi^2 = \sum_{p,i}^{N} \frac{\left[Z^*_p(t_i) - Z_p(t_i)\right]^2}{\sigma^2_{p_i}} \tag{1}$$

be minimized with respect to the n values of y_j. This leads to n equations in n unknowns and allows solution of the problem of determining the values of the unknown parameters, y_j.

A very simple example of such a problem is the least squares average. Here, $Z(t_i) = y_o$. If more than one measurement of $Z(t)$ is made, a weighted least squares solution for y_o may be obtained. If the variances, σ^2_i of all measurements, $Z^*(t_i)$ are equal, the weighted least squares estimate of y_o is simply

$$y_o = \frac{1}{N} \sum_{i=1}^{N} Z^*(t_i)$$

This technique has been applied extensively to the solution of nonlinear equations.

The application of these techniques to propulsion system analysis involves a differential correction technique in which adjustments to the y_j quantities are obtained from successive weighted least squares

solutions. The $Z_p(t_i, y_1, y_2 \ldots y_n)$ are successively recalculated until χ^2 in equation (1) is minimized. The adjusted quantities involved in the iteration which attains minimization are then accepted as the solution to the problem. A detailed explanation of this method is presented in the next section.

This method has been implemented by George C. Marshall Space Flight Center (refs. 1, 2, 3,) for postflight evaluation of the Jupiter and Saturn vehicles. It has been used by TRW Systems (refs. 4, 5, 6) for the preflight and postflight analyses of Thor, Atlas, Titan I, Titan II, Minuteman, Able-Star, Centaur, and Gemini-Titan. The Aerospace Corporation (ref. 7) has used the same method in the preflight and postflight evaluation of Titan II, Titan III, and Gemini-Titan.

Because of accurate assessments by Aerospace and TRW Systems, a larger Gemini-Titan payload capability was recognized. The confidence placed on their predictions enabled the inclusion, in GT-4, of the equipment needed for the space-walk experiment. According to ground-test information, the extra payload capability did not exist.

No vehicle containing a complex propulsion system has flown a sufficient time to require detailed propulsion system analysis during flight. However, the Apollo program (with several hours between engine firings and potential 14-day missions) necessitates a detailed inflight analysis to insure that flight decisions are formulated with the most accurate information. It is therefore conceivable that - with reliance on inflight analysis - certain missions will be successfully completed which would otherwise be aborted because of unrealistic preflight criteria.

METHOD OF FLIGHT ANALYSIS

Data Adjustment by Weighted Least Squares

The quantity chi-squared, defined by equation (1), is minimized by an iterative process in which independent variables, y_j (e.g., nominal thrust, flow rate, and calibration constants), are adjusted to promote matching between the dependent variables, Z_p, and flight conditions, Z_p^*. The dependent variables are generally nonlinear functions of the independent variables. Therefore, several iterations may be necessary before the linearized equations will lead to the true minimum. The

adjustments $\left(y_j^{\circ} - y_j\right)$ to the independent variables, y_j, are determined by solving the set of linear overdetermined equations,

$$\sum_{j=1}^{n} \frac{1}{\sigma_i} \frac{\partial Z_i}{\partial y_j} \left(y_j^{\circ} - y_j\right) - \frac{1}{\sigma_i} \left(Z_i^* - Z_i\right) = \frac{1}{\sigma_i} \left(u_i + \Delta_i + \delta_i\right), \qquad (2)$$

(where $i = 1, 2, \ldots, N$ and $N > n$),

or in matrix form

$$A\bar{v} - \bar{b} = \bar{r} \qquad (2a)$$

The equations (2) are the weighted least squares equations. The matrix A is the weighted partial derivative matrix, and the vector $\bar{b}$ is the weighted data difference. The dependent variables, $Z_i\left(y_j\right)$ are the initial estimates of the match. The unknown vector, $\bar{v}$, is the adjustment required of the independent parameters to obtain a better match. The quantity $\bar{r}$ is the weighted residual vector; the structure of each of its components is treated in the following paragraphs.

It is assumed that the Z_i^* are perfect statistical observations. Then their expected values, $\langle Z_i^* \rangle$, will describe a true physical situation, and their noise, $\delta_i = Z_i^* - \langle Z_i^* \rangle$, will be random stationary processes. Due to the use of empirical models, linearization, and other approximations, a performance model is generally imperfect; that is, it will not calculate the $\langle Z_i^* \rangle$ to the desired degree of accuracy. However, by minimizing equation (1), the model may be constrained to calculate the adjusted performance parameters, $Z^{\circ}_i = Z_i\left(y_j^{\circ}\right)$, so that they give the closest fit to $\langle Z_i^* \rangle$. The discrepancy will then be $\Delta_i = \langle Z_i^* \rangle - Z_i^{\circ}$. To calculate the Z_i°, an optimum set of propulsion parameters, y_j°, will be needed. Such an optimum set is approached by the repeated solution of equations (2).

The regression equations (2) are obtained by writing a Taylor series for Z_i°; that is,

$$Z_i^{\circ} = Z_i + \sum_{j=1}^{n} \frac{\partial Z_i}{\partial y_j}\left(y_j^{\circ} - y_j\right) + u_i, \quad (i = 1, 2, \ldots, N) \tag{3}$$

(where u_i is the remainder term), and combining it with definitions for δ_i and Δ_i.

The values δ_i are assumed to arise from a stationary statistical process of zero mean, caused by uncertainties of measurement and data-transmission apparatus. The Δ_i are not constrained to have zero mean. The Taylor series remainder term u_i, containing higher order derivatives of Z_i with respect to y_j, is the result of the linearization of equations (2). It is because of u_i that an iterative technique yielding repeated adjustments from equations (2) becomes necessary. In all practical problems u_i becomes negligible compared to Δ_i and δ_i as the iterative process converges. Therefore, it plays no part in the statistics of the problem.

The normal solution to the least squares equations is found by transposing the A matrix into equations (2a), in which case the residuals will vanish,

$$A^t A\bar{v} - A^t\bar{b} = 0 \tag{4}$$

Equations (4) are a determined set of linear equations (n equations with n unknowns), still in the unknown vector $\bar{v}$. Their solution will be that which minimizes the residual vector $\bar{r}$.

Best Estimate of Propulsion Parameters

The successive solutions of equations (4) are obtained until equation (1) is minimized. The parameters $\left(Z_i^{\circ},\ y_j^{\circ}\right)$ involved in the last iteration (which attains convergence) are then taken to be the best estimate of the propulsion parameters. Figure 1 is a schematic which illustrates the best-estimate process in its most general form. The process consists of six main subsystems:

(1) Independent variable data processor - calculates y_j from test data

(2) Process model - generates $Z_i\left(y_j\right)$

(3) Dependent variable data processor - calculates Z_i^* from test data

(4) Data comparison - tests for convergence, and forms the $\bar{b}$ vector

(5) Partial derivatives - forms the A matrix

(6) Linear least squares equations - solves for $\bar{v}$

The best-estimate concept, which is really a process of logic, requires the use of a computer in its application. In general, the process would be broken down into two computer programs as indicated by the dashed line in figure 1.

Program A would be a combination data processing/scientific program which would contain numerical filters, calibration conversions, and special calculations. Its purpose would be to transform the experimental flight data into a form acceptable to program B.

Program B is the iterative BEPP (best estimate of propulsion parameters) program. With the exception of the process model, the substance of this program has been treated in the above paragraphs.

Process Model

The process model is an empirical mathematical model of the propulsion and flight processes. It may contain a complete closed-loop propulsion/trajectory simulation. This is nearly always the case when a pump-fed liquid propellant propulsion system is involved. However, except for preflight simulation (where a complete trajectory simulation

is desirable) a propulsion model is sufficient for the flight analysis of pressure-fed liquid propellant and solid propellant propulsion systems. Such a propulsion model consists, in general, of two parts: a flight process model which determines the data comparison quantities (Z_i), and a propulsion system model which supplies the independent variables to the flight process model.

Flight process model.- The following equations are used to calculate the Z_i quantities that are employed in the calculation of χ^2 with equation (1), and in the calculation of the $\bar{b}$ vector of equations (2a).

(a) Thrust acceleration

$$\alpha = \frac{F}{W} \tag{5}$$

(b) Specific impulse

$$I_{sp} = \frac{F}{\dot{W}} \tag{6}$$

(c) Total vehicle weight

$$W = W_d + W_o + W_f + W_m + W_a \tag{7}$$

(d) Oxidizer weight

$$W_o = W_{o_p} - \int_{t_p}^{t} \dot{W}_o \, dt \tag{8}$$

(e) Fuel weight

$$W_f = W_{f_p} - \int_{t_p}^{t} \dot{W}_f \, dt \tag{9}$$

where F = instantaneous vehicle thrust

W = instantaneous total vehicle weight

$\dot{W}$ = total flow rate

W_d = dry weight of vehicle

W_a = vehicle ablative material instantaneous weight

W_m = miscellaneous instantaneous vehicle variable weights

W_{o_p} = oxidizer weight at time t_p

W_{f_p} = fuel weight at time t_p

t_p = initial engine ignition time

The independent varibles in the above equations are calculated from the propulsion system model.

Propulsion system model.- A schematic of the propulsion system with functional dependencies is shown in figure 2. For preflight simulation, a nonlinear fluid-dynamic model would be used (see fig. 3). A complete simulation involves balancing all of the iteration loops shown. As indicated in figure 3, the propulsion system and flight process models are directly coupled through the thrust acceleration, α, which is required in the calculation of fluid pressures.

For inflight and postflight analyses, the propulsion model would consist of empirical modeling of propellant flow rate, thrust, and ablative material weight, that is, empirical relationships of the form

$$
\begin{aligned}
\dot{W}_o &= \dot{W}_o(P_c, P_{I_o}, T_{I_o}) \\
\dot{W}_f &= \dot{W}_f(P_c, P_{I_f}, T_{I_f}) \\
F &= F(P_c, \dot{W}_o, \dot{W}_f, A_t, \varepsilon) \\
A_t &= A_t(P_c, \dot{W}_o, \dot{W}_f, t) \\
W_a &= W_a(P_c, \dot{W}_o, \dot{W}_f, t)
\end{aligned}
\tag{10}
$$

would be established from previous static test and flight test data. The independent variables (y_i), chamber pressure (P_c), interface pressures (P_{I_o}, P_{I_f}), interface temperatures (T_{I_o}, T_{I_f}), and time (t) would be telemetered input. These variables would be adjusted (to y_i^o) by solving equations (2) during the BEPP iteration process (see fig. 1).

Equations (10) would be represented in the form

$$X_j = \bar{X}_j + \sum_{i=1}^{n} \Delta X_{j_{y_i}} \tag{11}$$

where the $\bar{X}_j$ represent the nominal values of the dependent parameters (F, $\dot{W}_f$, $\dot{W}_o$, etc.), and the y_i are the independent parameters (P_{I_o}, P_{I_f}, P_c, etc.).

The

$$\Delta X_{j_{y_i}} = \frac{\partial X_j}{\partial y_i} \Delta y_i$$

are obtained from specially generated tables (of $\Delta X_{j_{y_i}}$ vs y_i) or from special single variable functions.

Trajectory Specific Impulse

Included in the category of measured or derived quantities (Z_j^*), which the BEPP program attempts to match, is the quantity referred to as trajectory specific impulse. Techniques for calculating the quantity have been documented in reference 4.

The applicability and success of the technique depend on the truth of the assumptions that thrust and mass flow rate are constant. The desired equation is then derived by simple manipulation of Newton's Second Law,

$$m\vec{a} = \vec{F} - m\vec{g} \tag{12}$$

where m is the instantaneous vehicle mass, a is the inertial acceleration vector, F is the vectorial thrust, and g is the gravitational acceleration. Using the definition of thrust acceleration, namely

$$\vec{\alpha} = \vec{a} + \vec{g} \tag{13}$$

equation (12) becomes

$$m\vec{\alpha} = \vec{F} \tag{14}$$

and hence,

$$m|\vec{\alpha}| = |\vec{F}| \tag{15}$$

or simply

$$m\alpha = F \tag{16}$$

The thrust acceleration, $\bar{\alpha}$, is that quantity which is measured by the vehicle-borne accelerometers. The force F in this context represents the resultant of all forces acting on the vehicle, except gravity.

The assumption of constant flow rate allows the usage of the following expression

$$m = m_o - \dot{m}\left(t - t_o\right) \tag{17}$$

where m_o is the vehicle mass at the initial firing time t_o. From equation (16),

$$\frac{1}{\alpha} = \frac{m}{F} \tag{18}$$

which, combined with equation (17), yields

$$\frac{1}{\alpha} = \frac{m_o}{F} - \frac{\dot{m}}{F}\left(t - t_o\right) \tag{19}$$

With the assumption that F is constant, $\frac{1}{\alpha}$ has the form of a straight line,

$$\frac{1}{\alpha} = A + B\tau \tag{20}$$

where

$$A = \frac{m_o}{F} \tag{21}$$

$$B = \frac{-\dot{m}}{F} \tag{22}$$

$$\tau = t - t_o \tag{23}$$

Consequently,

$$I_{sp} = -\frac{1}{Bg_o} \tag{24}$$

Equations (19) and (24) state that the effect of I_{sp} on the trajectory is seen directly in the increase of acceleration due to decreasing vehicle mass.

Method of determination of I_{sp}.- The procedure involved is to use values of α known at various times, t, to solve equation (20) for values of A and B. Since a straight line is completely determined by two points, a minimum of two values of α (at two different times) may be used to compute A and B.

The specific impulse so obtained depends solely on the two values of acceleration, the two times at which they apply, and the standard acceleration of gravity ($g_o = 32.174$ ft/sec^2). It must be remembered, however, that the I_{sp} so computed is vehicle I_{sp}, not engine I_{sp}, since $\dot{m}$ in this context includes all mass leaving the vehicle. For example, propellant leakage (by reducing the weight of the vehicle) serves to increase acceleration. The contributions of the RCS engines are also included when such systems are thrusting during the firing of the primary system. These effects must be accounted for in the determination of propulsion performance. However, for mission assessment, the vehicle I_{sp} is more desirable than engine I_{sp} since its contribution to the total velocity gain of the vehicle is more important.

As a general rule this method requires considerable quantities of high quality data. Furthermore, the results are very sensitive to violations of the assumptions previously discussed, especially that of constant thrust.

Using the definition

$$F \equiv F_o + \delta F \tag{25}$$

equation (19) becomes

$$\frac{1}{\alpha} = \frac{m_o}{F_o\left(1 + \frac{\delta F}{F_o}\right)} - \frac{\dot{m}}{F_o\left(1 + \frac{\delta F}{F_o}\right)} \tag{26}$$

Performing the division by the quantity $\left(1 + \frac{\delta F}{F_o}\right)$ to form a power series with each term, neglecting higher order terms and rearranging, equation (26) becomes

$$\frac{1}{\alpha} \approx \frac{m_o}{F_o} - \frac{\dot{m}\tau}{F_o}\left[\frac{m_o}{\dot{m}}\,\frac{\bar{\dot{F}}}{F_o} + 1\right] + \frac{\dot{m}\tau^2}{F_o}\,\frac{\bar{\dot{F}}}{F_o} \tag{27}$$

where $\bar{\dot{F}} = \frac{\delta F}{\tau}$, the average change in F over the period between t_o and t. Unless $\bar{\dot{F}}$ is constant, the quantity $\frac{\dot{m}}{F}\left[1 + \frac{m_o}{\dot{m}}\,\frac{\bar{\dot{F}}}{F_o}\right]$ changes as a function of time.

Equating coefficients of equations (27) and (20),

$$-B = \frac{\dot{m}}{F_o}\left[1 + \frac{m_o}{\dot{m}}\,\frac{\bar{\dot{F}}}{F_o}\right] \tag{28}$$

is obtained. Therefore

$$-\frac{1}{Bg_o} = I_{sp}\,\frac{1}{\left[1 + \frac{m_o}{F_o}\,\frac{\bar{\dot{F}}}{\dot{m}}\right]} \tag{29}$$

Since $-1/Bg_o$ is the quantity that is determined by this method, it does not reflect the true I_{sp}, but a quantity related to it. With an estimate of the term $\bar{\dot{F}}/\dot{m}$, the quantity $-1/Bg_o$ can be corrected to obtain the true I_{sp}.

As explained with considerable detail in reference 4, the very sensitivity of this method to changing thrust may be used to indicate not only when the asumptions are being violated but, in some cases, why.

Additional Data Parameters To Be Matched

The trajectory specific impulse and thrust acceleration, itself, are quantities in the Z_i^* category which will be matched by the quantities, Z_j, calculated from the flight process model. These quantities are determined from the trajectory alone and are calculated or filtered by subsystem 3 of program A (see fig. 1). In addition, the vehicle weight and propellant weights of the flight process model, equations (7), (8), and (9), will be adjusted to match like quantities derived from flight measurements. The accuracies of these parameters are critically dependent on the ability to measure propellant quantity as a function of firing time.

For this reason, as far as flight analysis is concerned, the propellant gaging systems are by far the most important measuring devices in the propulsion system.

Discussion of Apollo Applications

The primary function of the propulsion systems on the Apollo spacecraft is to provide translational or rotational capability by producing thrust. An additional effect of significance is to change the vehicle weight by expenditure of fluids. The capability of any given propulsion system is limited primarily by its specific impulse and the available quantity of usable propellants. Also of concern are thrust and mixture ratio. Hence, procedures for the detection of performance degradation can generally concentrate on these quantities. In addition, malfunctions of concern that are not of the easily detectable type generally affect one or more of these parameters.

The determination of these key propulsion parameters requires data from the various propulsion, propellant, and pressurization systems. In return, the analysis can comment on the validity of such data. Hence, major parameters from supporting subsystems are studied and their performance assessed.

A unique feature of the BEPP approach is evident in the fact that the solution also provides a statistical assessment of how well the calculated performance parameters are known at any given time. This information is important in assessing the validity of the calculated parameters and in determining the cause of an anomaly.

Since the performance parameters have been calculated using system models, it is a simple and efficient process to use the same models (in

Additional Data Parameters To Be Matched

The trajectory specific impulse and thrust acceleration, itself, are quantities in the Z_i^* category which will be matched by the quantities, Z_j, calculated from the flight process model. These quantities are determined from the trajectory alone and are calculated or filtered by subsystem 3 of program A (see fig. 1). In addition, the vehicle weight and propellant weights of the flight process model, equations (7), (8), and (9), will be adjusted to match like quantities derived from flight measurements. The accuracies of these parameters are critically dependent on the ability to measure propellant quantity as a function of firing time.

For this reason, as far as flight analysis is concerned, the propellant gaging systems are by far the most important measuring devices in the propulsion system.

Discussion of Apollo Applications

The primary function of the propulsion systems on the Apollo spacecraft is to provide translational or rotational capability by producing thrust. An additional effect of significance is to change the vehicle weight by expenditure of fluids. The capability of any given propulsion system is limited primarily by its specific impulse and the available quantity of usable propellants. Also of concern are thrust and mixture ratio. Hence, procedures for the detection of performance degradation can generally concentrate on these quantities. In addition, malfunctions of concern that are not of the easily detectable type generally affect one or more of these parameters.

The determination of these key propulsion parameters requires data from the various propulsion, propellant, and pressurization systems. In return, the analysis can comment on the validity of such data. Hence, major parameters from supporting subsystems are studied and their performance assessed.

A unique feature of the BEPP approach is evident in the fact that the solution also provides a statistical assessment of how well the calculated performance parameters are known at any given time. This information is important in assessing the validity of the calculated parameters and in determining the cause of an anomaly.

Since the performance parameters have been calculated using system models, it is a simple and efficient process to use the same models (in

conjunction with the derived parameters) to predict ensuing performance and remaining system capability. For example, the overall velocity gain capability and the associated confidence limits can then be used to determine whether the mission should be continued or whether a contingency abort plan should be initiated.

Hence, not only can malfunctions and performance degradations be detected by this method, but in addition their effects on the subsequent portions of the mission can be properly assessed.

The emphasis of this report has been placed on the translational propulsion systems: SPS, LEM DPS, and LEM APS. The same techniques, however, are applicable to reaction control system analysis. Because the requirements placed on the Apollo RCS are less stringent (from a performance viewpoint) than those of the translational systems, and because of the redundancy of the RCS, the analyses of these systems have not been detailed.

DATA PROCESSING

Because the flight analysis technique requires considerable use of experimental data, a large part of the effort must be expended in the reduction and evaluation of such data. Another major data processing task is that of analysis simulation prior to actual flights.

In general, four major categories of data processing are readily recognizable:

(1) Processing of static test data for empirical model development. Considerable leadtime will be required for the initial development of computer programs as well as for actual data processing.

(2) Simulation of the inflight analysis, for familiarization. Considerable leadtime before the first flight will be required for the development and extensive use of the necessary computer programs.

(3) Processing of real-time propulsion and trajectory data. Included will be data reduction quantification, filtering, and inflight analysis.

(4) Processing of flight data for postflight analysis and feedback into the empirical models. This category requires essentially no leadtime for program development.

Computer Programing Scheme

As indicated above, a considerable amount of programing will be necessary to support the flight analysis effort. The programing aim is to provide all necessary input for engineering judgment with as small an expenditure of manpower as possible. Such an effort requires a coherent, well-balanced plan, and a closely coordinated effort (engineering/programing) to carry it out.

An overall scheme for the required computer programs is given in figure 4. This schematic illustrates the desired programing sequence, and the planned usage of the programs. Three types of program analysis are involved:

(a) Data reduction and information processing

(b) Statistical analysis

(c) Scientific analysis

Empirical model development.- PROMERGE, the propulsion test-tape merge program, is a type (a) program. Its purpose is to merge and transform test data tapes from various propulsion testing facilities (AEDC, WSMR-PSDF) into a standard format tape for intermediate data storage. The tapes thus generated will then be batch-merged into a single tape by the secondary merge program, BIMERGE.

The resulting batch-merged tapes, containing data contiguously stored from many test firings, would then be processed by DATASAVE, the Propulsion Data Assimilation Program. DATASAVE, a type (a) program, is a data storage and retrieval system. Its purposes are (a) to permanently store data in a manner which allows specialized retrieval upon request and (b) to retrieve data, according to special criteria, for compilation of samples for statistical analysis and plotting. Associated with DATASAVE is a type (c) program, ANYMODEL. This is a propulsion-oriented analytical model used to convert propulsion system data to standard inlet conditions or rated operating conditions.

The samples compiled by DATASAVE will be composed predominately of raw measurement data. To generate various propulsion parameters, a means must be supplied for performing calculations with such data. This function will be provided by DATATRAN, another type (a) program.

In the course of data storage and retrieval, each measurement will be identified by problem-oriented names. Examples are FLOWOX and FLOWFU for oxidizer and fuel flow rate, FAXIAL and PCELL for axial thrust and

ambient cell pressure. Such names will be standard for all propulsion data; they will result from measurement decoding in the PROMERGE program.

To perform calculations involving the raw measurements, Fortran-type equations involving the associated measurement names may be submitted to DATATRAN in punched card form. DATATRAN will interpret the equations and perform the desired operations to generate new parameters. Vacuum specific impulse, for example, might be calculated from the raw measurements described above - for each set of such data - if the following expression were supplied to DATATRAN:

```
ISPVAC = FAXIAL/(FLOWOX + FLOWFU) + 7555.*PCELL
```

(The constant 7555 in this expression is the nozzle exit area.). The new parameters will henceforth be identified by the corresponding name which occurs on the left of the equal sign. Thus a new data sample is generated (a sample of ISPVAC for instance) from a combination of data samples already in existence.

The samples produced by the foregoing programs will then be evaluated through the use of STATPACK, a group of statistical-analysis programs, and PLOTPACK, a group of type (a) programs to be used for automatic plotting. STATPACK will contain regression programs for function generation and methods for confidence determination, as well as analysis of variance methods. The programs that will compose STATPACK have been acquired previously and are presently in operation. PLOTPACK will consist of programs which will allow optionally selected plotting on either a high-speed microfilm plotter, such as the SC 4020, or a somewhat slower high-resolution plotter, such as the Calcomp 564.

Programs in box A of figure 4 would eventually be lumped into a chain program from which each specific program could be called individually or sequentially through an executive routine. The resulting chain program would be a general propulsion data-evaluator. It could be used for all types of data analysis, regardless of the application. Its primary use in the flight analysis effort would be in the synthesis of the propulsion models, PROMODEL and PREMODEL.

PROMODEL, the empirical propulsion system model for inflight and postflight analysis, is represented conceptually by equations (10). The functions involved would be derived almost exclusively from test data obtained in ground static firings and flight test firings. This model would require extensive development and maintenance. A considerable amount of engineering judgment would be involved. PREMODEL, a nonlinear

fluid-dynamic propulsion simulator (see fig. 3), would also require test data analysis in the determination of empirical resistance factors and orifice coefficients.

Flight analysis programs.- PREMODEL would be used as a subroutine in the Preflight Propulsion Performance Predictor, PREBEPP, to predict the flight performance of the propulsion system. The flight process model of PREBEPP would probably be a two-dimensional trajectory simulator.

Programs in box B of figure 4, REALBEPP and POSTBEPP, will be the primary flight analysis tools. REALBEPP will incorporate all of the analysis methods involved in the BEPP process that can be effectively utilized during flight. Associated with the BEPP process would be a trajectory simulator to predict ensuing flight performance based on the BEPP results for a particular engine firing. This simulator might be a part of REALBEPP, or a separate program entirely (e.g., the Real-time Trajectory Program). The purpose of REALBEPP would be to supply analysis information to the flight controllers as soon as possible after an engine firing. To support this program, a large amount of real-time data processing would be required. The capability for processing such data in a semi-automatic fashion is contingent on the hardware involved. This topic is treated in more detail under Hardware Requirements.

POSTBEPP, the Postflight Propulsion Evaluator, will incorporate the most accurate methods available for the BEPP process. Less emphasis will be placed on the speed of analysis (as in REALBEPP) and considerably more data will be evaluated. However, the analysis methods will be substantially the same.

Flight-Time Data Processing

All telemetry data from the propulsion system to be analyzed will be utilized by REALBEPP unless the instrumentation is known to have malfunctioned. Thus, part of the REALBEPP program will address itself to preliminary data editing to eliminate obviously spurious points. This editing can be quite coarse since REALBEPP can be mechanized to do fine editing as part of its analysis.

In addition to normal propulsion-system flight data (pressures, temperatures, etc.), trajectory data must be processed in real time. The primary trajectory parameter, thrust acceleration, is the quantity sensed by the internal guidance system accelerometers. IGS accelerometers have been developed to a state of reliability and accuracy far exceeding any instrumentation directly monitoring the propulsion system.

fluid-dynamic propulsion simulator (see fig. 3), would also require test data analysis in the determination of empirical resistance factors and orifice coefficients.

Flight analysis programs.- PREMODEL would be used as a subroutine in the Preflight Propulsion Performance Predictor, PREBEPP, to predict the flight performance of the propulsion system. The flight process model of PREBEPP would probably be a two-dimensional trajectory simulator.

Programs in box B of figure 4, REALBEPP and POSTBEPP, will be the primary flight analysis tools. REALBEPP will incorporate all of the analysis methods involved in the BEPP process that can be effectively utilized during flight. Associated with the BEPP process would be a trajectory simulator to predict ensuing flight performance based on the BEPP results for a particular engine firing. This simulator might be a part of REALBEPP, or a separate program entirely (e.g., the Real-time Trajectory Program). The purpose of REALBEPP would be to supply analysis information to the flight controllers as soon as possible after an engine firing. To support this program, a large amount of real-time data processing would be required. The capability for processing such data in a semi-automatic fashion is contingent on the hardware involved. This topic is treated in more detail under Hardware Requirements.

POSTBEPP, the Postflight Propulsion Evaluator, will incorporate the most accurate methods available for the BEPP process. Less emphasis will be placed on the speed of analysis (as in REALBEPP) and considerably more data will be evaluated. However, the analysis methods will be substantially the same.

Flight-Time Data Processing

All telemetry data from the propulsion system to be analyzed will be utilized by REALBEPP unless the instrumentation is known to have malfunctioned. Thus, part of the REALBEPP program will address itself to preliminary data editing to eliminate obviously spurious points. This editing can be quite coarse since REALBEPP can be mechanized to do fine editing as part of its analysis.

In addition to normal propulsion-system flight data (pressures, temperatures, etc.), trajectory data must be processed in real time. The primary trajectory parameter, thrust acceleration, is the quantity sensed by the internal guidance system accelerometers. IGS accelerometers have been developed to a state of reliability and accuracy far exceeding any instrumentation directly monitoring the propulsion system.

In addition, other error-producing components of an IGS principally affect accuracy of orientation. Since the primary analysis of the performance of translational propulsion systems is not concerned with the direction of thrust, but only with its magnitude, the IGS orientation errors generally are of no significance for propulsion analysis. In any event, a functioning IGS has accuracy sufficient for propulsion analysis. The only limitations on such data are associated with data transmission rates, data resolution, and data processing.

Alternate sources of thrust acceleration are provided by tracking systems. However, it appears that on most Apollo missions the tracking data will be useful in propulsion flight analysis primarily to verify IGS operation and provide updated calibrations of it, rather than to provide instantaneous thrust accelerations.

HARDWARE REQUIREMENTS

The inflight evaluation of the propulsion systems will require the utilization of special data-processing equipment. A means must be provided for the following sequential operations:

(a) Reduction of telemetered real-time propulsion system data and trajectory data.

(b) Transmission of reduced real-time data to an evaluation computer.

(c) Evaluation of a propulsion firing using the REALBEPP program.

(d) Transmission of the evaluation results to the propulsion subsystem support area for interpretation.

(e) Transmission of the interpreted results to the flight controllers.

Computer Communication Network

To accomplish the operations enumerated above, a computer communication network is proposed. Such a network is conceptually illustrated in figure 5. As indicated, real-time flight data transmitted from ground tracking stations to the RTCC would be tapped and channeled to the Data Reduction Complex. Selected propulsion data would be reduced by the Data Reduction Computer and transmitted by wire to a Propulsion Flight Analysis Computer. When sufficient data have been received for

a particular engine firing, an evaluation would be performed by the REALBEPP program. The results of the evaluation would then be transmitted by wire to the propulsion subsystem support area for interpretation. The interpreted results would then be presented to the mission controllers.

Figure 6 shows how the propulsion flight analysis process would be semi-automatically controlled. The propulsion flight-analysis computer, a large high-speed machine with external interrupt capability, would be operated for flight analysis by a smaller machine (the propulsion-analysis control computer). The satellite computer would be coupled to the large machine to enable direct interrupt for analysis during flight.

Flight-analysis computer.- The propulsion flight-analysis computer would be subject to demand usage intermittently during the entire flight, potentially a 2-week period. To utilize this machine efficiently during the interim periods, a special executive program, possessing an interrupt load/restore feature, would be required. Such a feature would allow an executing program to be interrupted (through an external command), removed from memory (in a dump fashion), and placed in interim storage (disc or drum). The REALBEPP program would then be loaded and executed using reduced real-time flight data. After the REALBEPP execution, the original program would be restored, and its execution would continue from the interruption point.

Because of the potentially large size of the REALBEPP program (projected 50 000 words) and the necessity for processing very large data matrices (potentially 90 000 elements for the full engine life of the Service Propulsion System), the flight-analysis computer must possess a large directly-accessible memory plus extensive auxiliary storage. The special interrupt load/restore monitor would also be quite useful in the execution of large time-consuming simulation programs such as spacecraft thermal analyzers. Such programs, which are now in existence, require at least a 65K memory.

The flight-analysis computer would be available for open-shop data processing when not being utilized for propulsion flight analysis operation.

Analysis-control computer.- The analysis-control computer would be physically located in the propulsion support area of the Mission Control Center. Its primary purpose would be to provide the means for semi-automatic operation of the REALBEPP program during flights. It would handle all peripheral processing for the main frame during the REALBEPP operation. Associated peripheral equipment would be a card reader, a line printer, several magnetic tape transports, and plotting equipment.

PROGRESS AND PLAN

Current Status

Threshold engineering work.- Much of the fundamental engineering work necessary to insure the existence of flight analysis capability has been accomplished. Evaluations of vehicle instrumentation and telemetry have been requested. Mission profiles and requirements have been assessed with regard to the facility of flight analysis. Additional requirements have been submitted in cases where critical discrepancies were apparent, and in cases where sufficient leadtime for rectification was available.

Because of limitations in instrumentation and hardware in AFRM 009 and AFRM 011, the evaluation of SPS firings on missions 201 and possibly 202 will be severely compromised. However, telemetered information from AFRM 012 should be sufficient for the performance of a detailed analysis during mission 204.

Propulsion test objectives have been formulated for the later Block I missions. Such objectives have been established with a view to obtaining the maximum amount of propulsion system information within the constraints of mission capability.

Computer program development.- Some programing progress has been realized. The PROMERGE program has been checked out sufficiently to process tapes from AEDC and is being used for this purpose. The BIMERGE program has been essentially checked out and DATASAVE is in the final checkout stages. An initial version of ANYMODEL, sufficient for SPS usage, has been checked out; but much modification is anticipated. Preliminary coding has been completed for DATATRAN, and checkout has begun. All of the programs necessary to make up STATPACK are in existence and in common usage. However, much interface work is required. All of these programs are being developed in Fortran for the CDC 3600 computer.

Contracted Task

Under the Apollo Systems Analysis Program (Contract NAS 9-2938), TRW Systems will support MSC in the development and implementation of flight analysis capability. Independent backup analyses during actual flights will also be conducted. This task is divided into three major subtasks.

Subtask I - Ground test performance analysis.- The purpose of this subtask is to facilitate the use of static test data in support of the Manned Spacecraft Center flight analysis objectives for Apollo. TRW will document and deliver existing computer programs to carry out performance analyses of engine static tests and to store, retrieve, statistically analyze, and graphically display the test data and performance results. In addition TRW will operate these programs to meet the requirements of the Manned Spacecraft Center analytical efforts.

Subtask II - Preflight performance prediction.- The purpose of this task is to provide improved capability for the preflight prediction of the performance and missions effects of the Apollo propulsion systems. This effort is designed to aid in mission planning in order to maximize the capabilities of the Apollo vehicle. TRW will develop a computer program which will provide the capability for predicting the performance of propulsion systems on Apollo flights. This program (PREBEPP) will incorporate the capability of simulating malfunctions and of assessing the effect of variation in system parameters on performance.

In addition, TRW will update performance simulation models and programs and develop new analytical studies and evaluations conducted for mission planning and support.

Subtask III - Flight evaluation.- The purpose of this subtask is to facilitate the development of propulsion system evaluation capability at Manned Spacecraft Center. TRW will formulate and deliver preliminary program documentation to provide capability for the evaluation of the Apollo propulsion systems during and after each mission. This program documentation will be used to develop the computer programs REALBEPP and POSTBEPP for the flight-analysis computer. Such programs will also be developed by TRW for their own computer. TRW will implement such programs independently during flights to provide backup verification to the Manned Spacecraft Center analysis and, hence, added confidence in the results.

Flight Analysis Plan

The emphasis of this paper has been predominately on the inflight analysis which is most critical in a manned flight and requires the most preparation. The goal of flight-analysis preparation is to be ready for the first manned Apollo flight, mission 204. The preparation for the inflight analysis of the propulsion systems during this mission will, for reasons to be made apparent, necessitate that the preflight and postflight analysis capability be prepared at the same time.

Analysis program development.- A complete set of preliminary program documentation for the development of the flight-analysis programs will have been received from TRW Systems by February 1966. However, this flow of information will have been continuous throughout the last quarter of 1965, thereby enabling the programing effort to proceed in an efficient manner. The completion of the flight-analysis programs (REALBEPP and POSTBEPP) under favorable conditions can therefore be expected by July 1966. These dates, however, are contingent upon the availability of computer hardware.

The preflight prediction program, PREBEPP, will be developed entirely by TRW Systems. It is to be delivered to the Manned Spacecraft Center in February 1966. The primary function of this program, in the flight-analysis effort, will be mission simulation. An extensive amount of simulation will be necessary to train engineers in the effective use of the inflight analysis program REALBEPP. Various types of malfunctions will be simulated and the resulting trends recorded.

In addition, the normally expected preflight performance predictions will be conducted to support the Mission Planning and Analysis Division.

Computer hardware and executive program development.- Because of the relative uniqueness of the computer hardware arrangements for inflight analysis, special system (executive) programing will be required. Estimates of such an effort by system programers have indicated that it would require approximately 1 month to modify an existing program to this purpose. Such a modification could be performed by the computer manufacturer and initiated prior to machine installation.

Inflight analysis preparation.- Figure 7 is a proposed schedule for the preparation and accomplishment of flight analysis for mission 204 and subsequent missions. Because of the extensive amount of data processing required in model development and simulation, it is necessary that a computer be obtained by May 1966. Much of the computer program development and data processing can be accomplished prior to this date on other machines. However, all of the required hardware and software must be available for the inflight analysis simulation.

REFERENCES

1. Speer, F. A.; and Jackson, F. W.: The Ballistic Evaluation of Rocket Engine Performance. ABMA DA-TR-6-59, May 26, 1959.

2. Jackson, J. W.: Propulsion System Evaluation Through Flight Simulation. MSFC MTP-AERO-62-69, August 31, 1962.

3. Speer, F. A.; and Emanuel, G. R.: Flight Evaluation Procedure for Saturn Vehicles. MSFC MTP-AERO-62-78, November 5, 1962.

4. Powers, C. S.: Precision Determination of Vacuum Specific Impulse from Trajectory Data. Fifth Symposium on Ballistic Missile and Space Technology, August 1960.

5. Lear, C. W.: Program for Best Estimate of Propulsion Parameters. TRW/STL IOC 9732.6-182, December 5, 1961.

6. Lear, C. W.: A Method for Estimating Missile Propulsion Performance from Flight Data. Eighth Symposium on Ballistic Missile and Space Technology, August 1963.

7. Beck, L. A.; and Smalley, W. M.: Aerospace Post Flight Propulsion System Analysis of Gemini Launch Vehicle GT-1 (BEEP Program Reconstruction) ATM-64-2432.43-23, September 1964.

8. Lieberman, S.: Generalized Non-Linear Pressurized Feed/Propulsion System Steady-State Model. TRW/STL IOC 65.9731.10-31, April 19, 1965.

9. Lieberman, S.: Direct Increment Factor Rocket Engine Model (DIFREM). TRW/STL IOC 65.9731.10-32, May 10, 1965.

10. Powers, C. S.: Apollo Diagnostic Logic Study: In Flight Analysis of Propulsion and Propellant Systems. Unpublished communication, July 26, 1965.

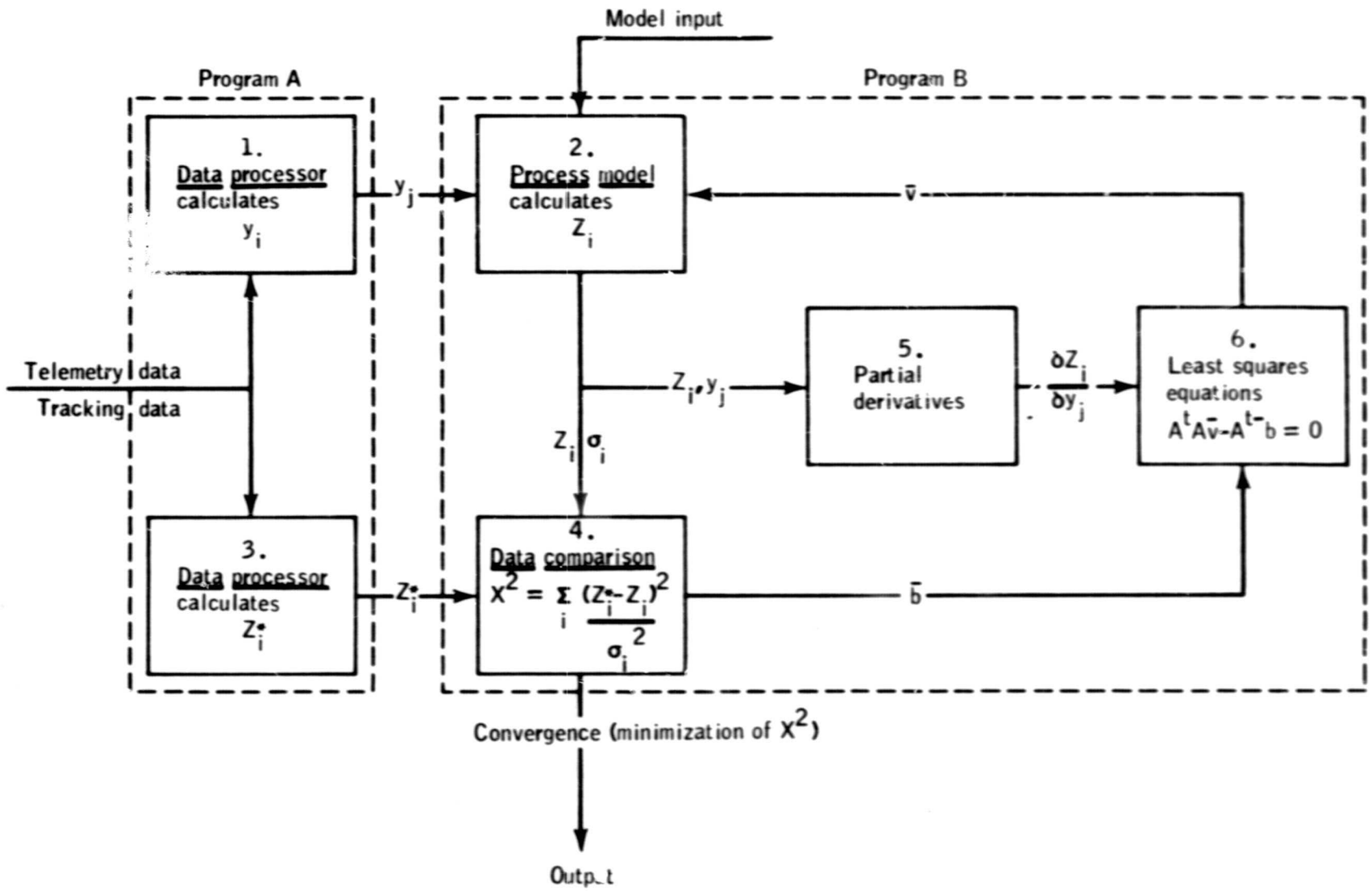

Figure 1.- Best estimate of propulsion parameters.

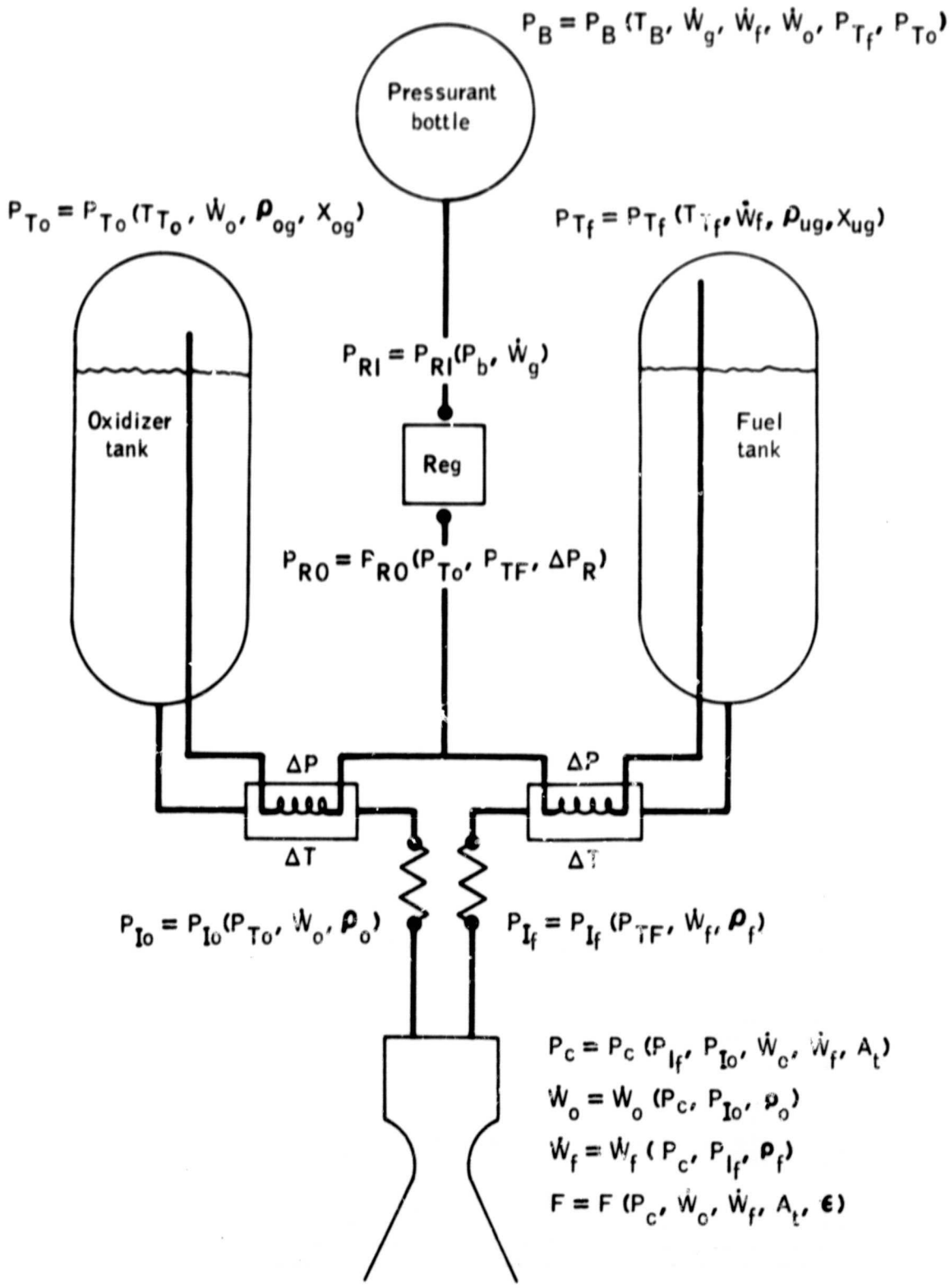

Figure 2.- Propulsion system schematic.

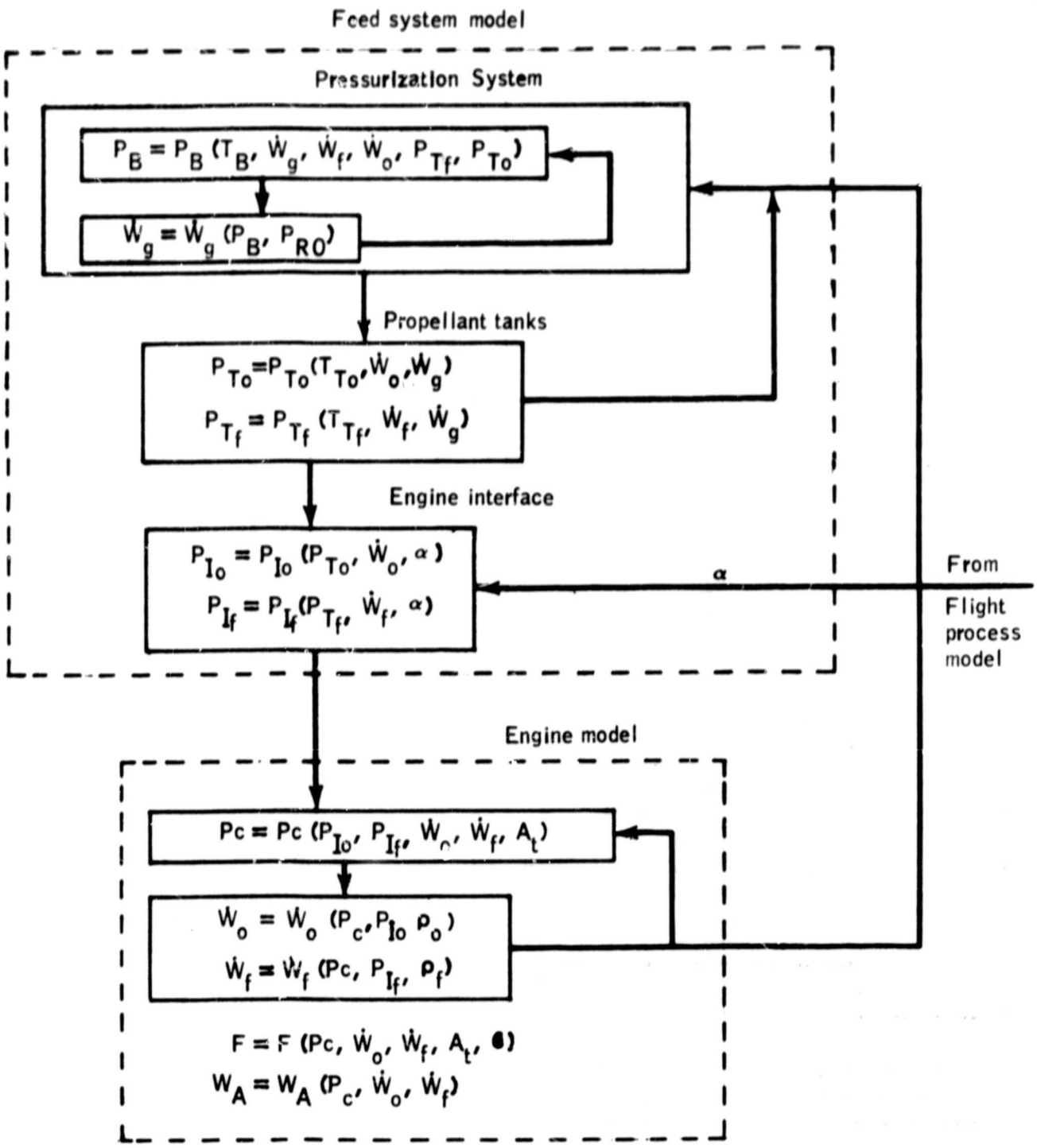

Figure 3.- Logic of nonlinear propulsion system model.

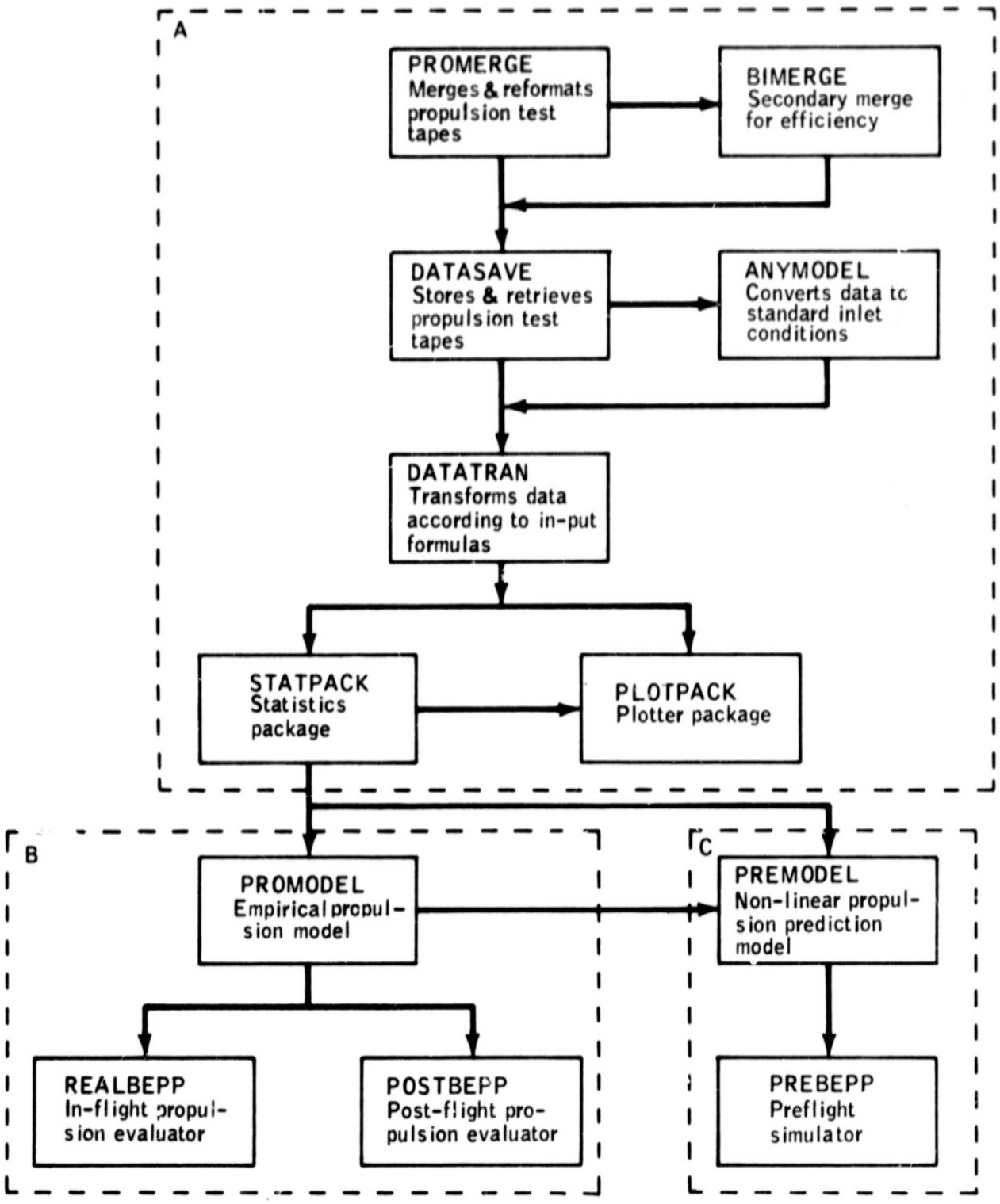

Figure 4.- Scheme of required computer programs.

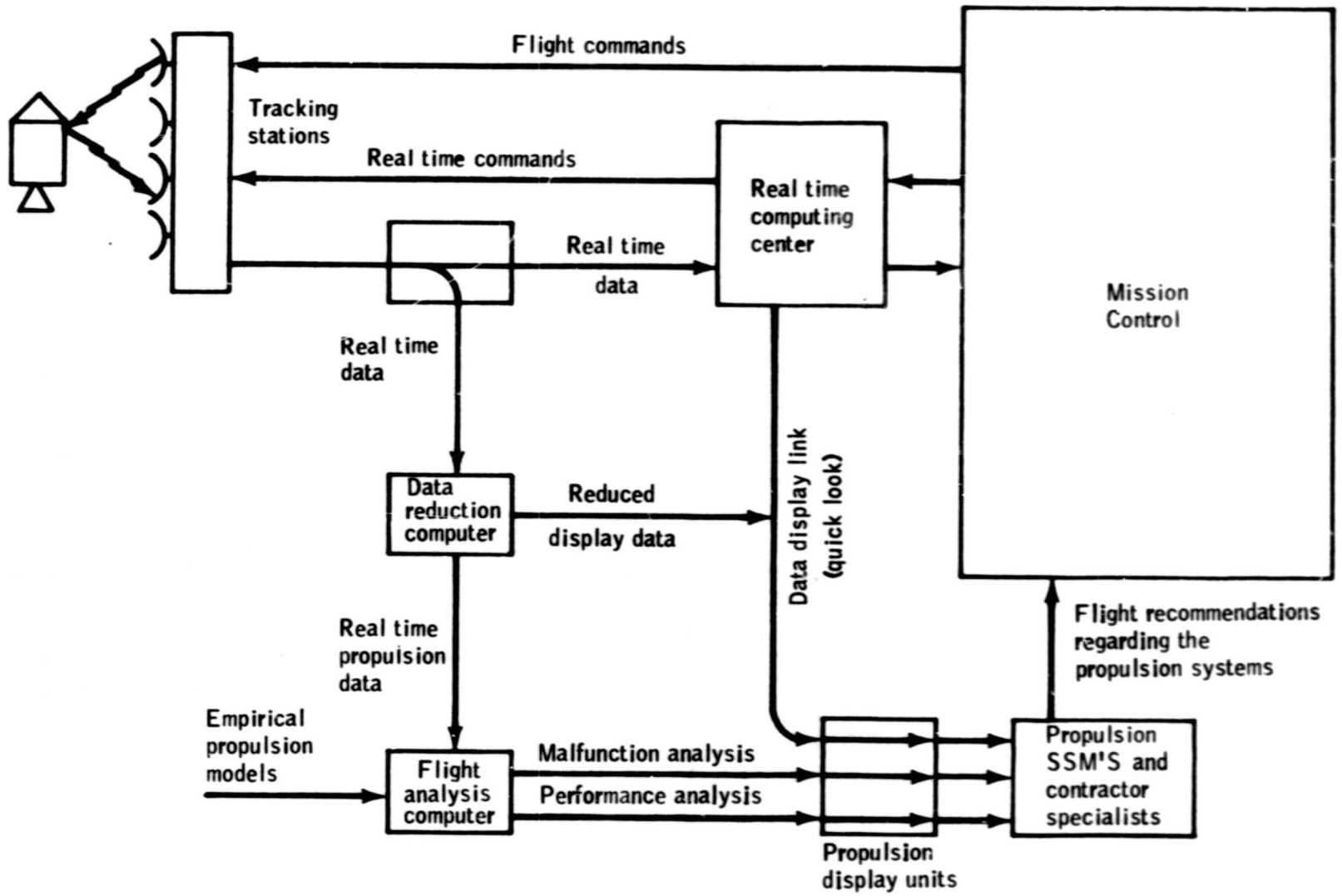

Figure 5.- Communication network for inflight propulsion analysis.

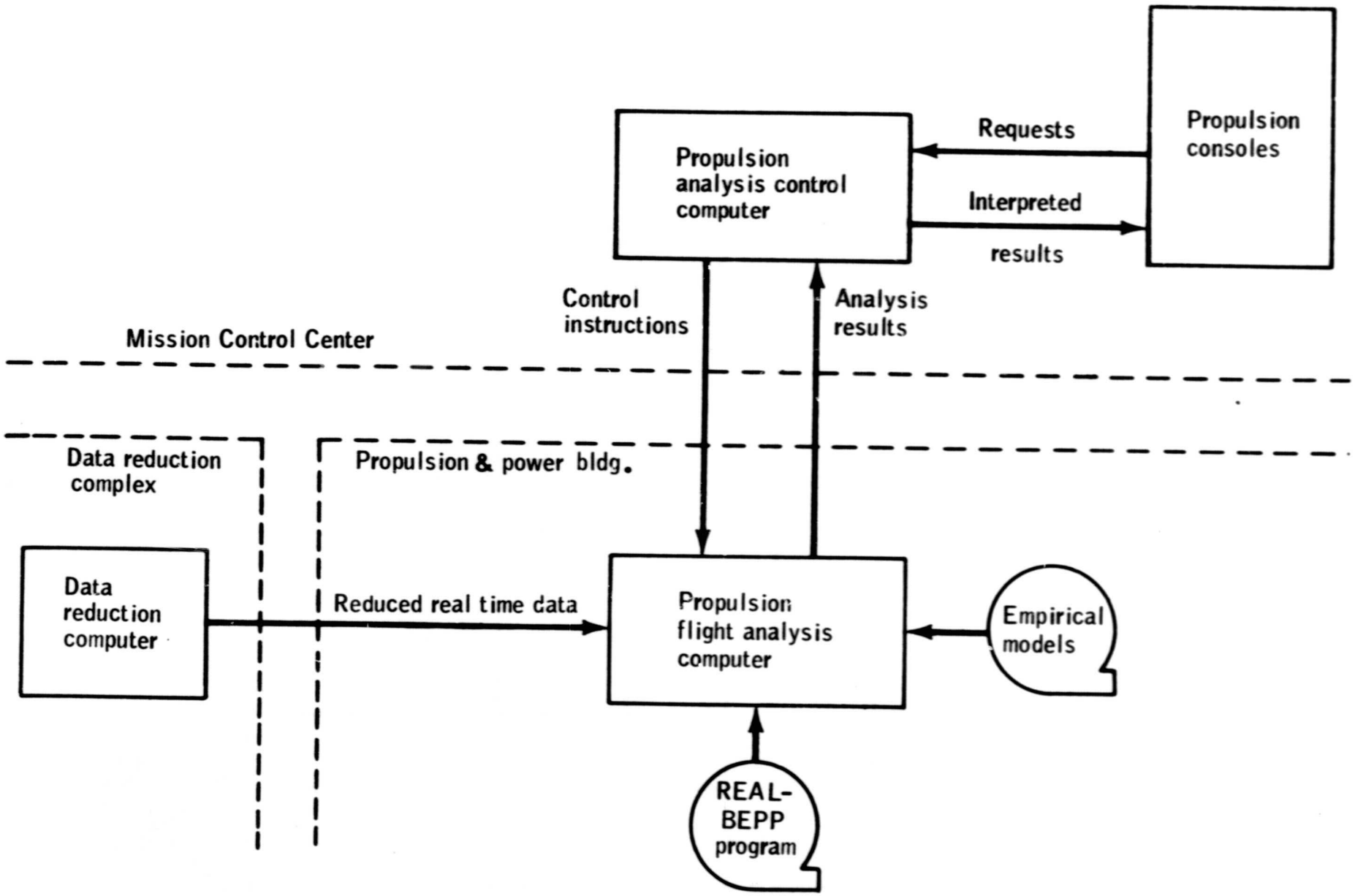

Figure 6.- Special purpose computer configuration.

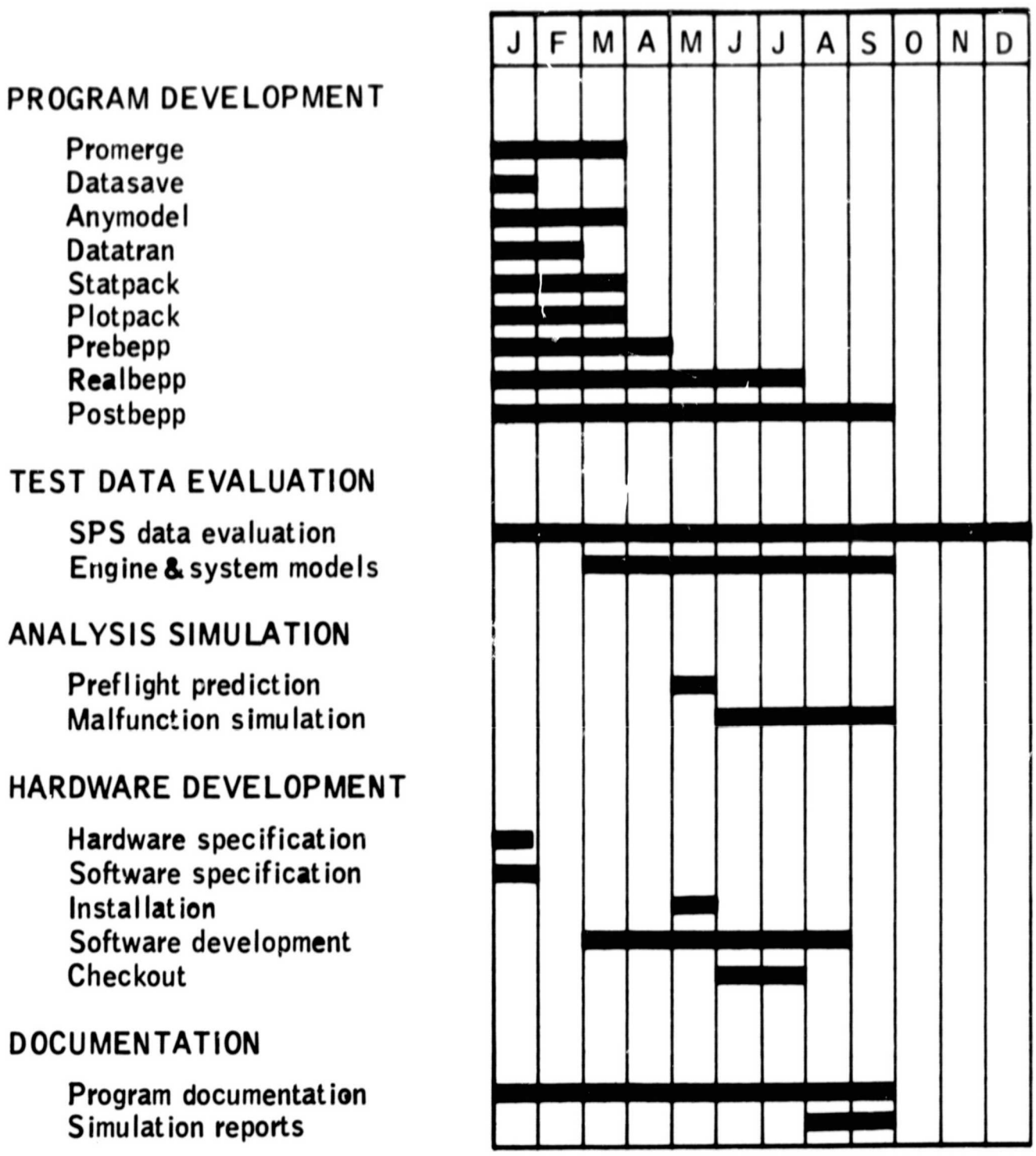

Figure 7.- 1966 schedule for flight analysis preparation.