March 3, 1964 M. F. HEIDMANN 3,122,885

INJECTOR FOR BIPROPELLANT ROCKET ENGINES

Filed June 19, 1961 3 Sheets-Sheet 1

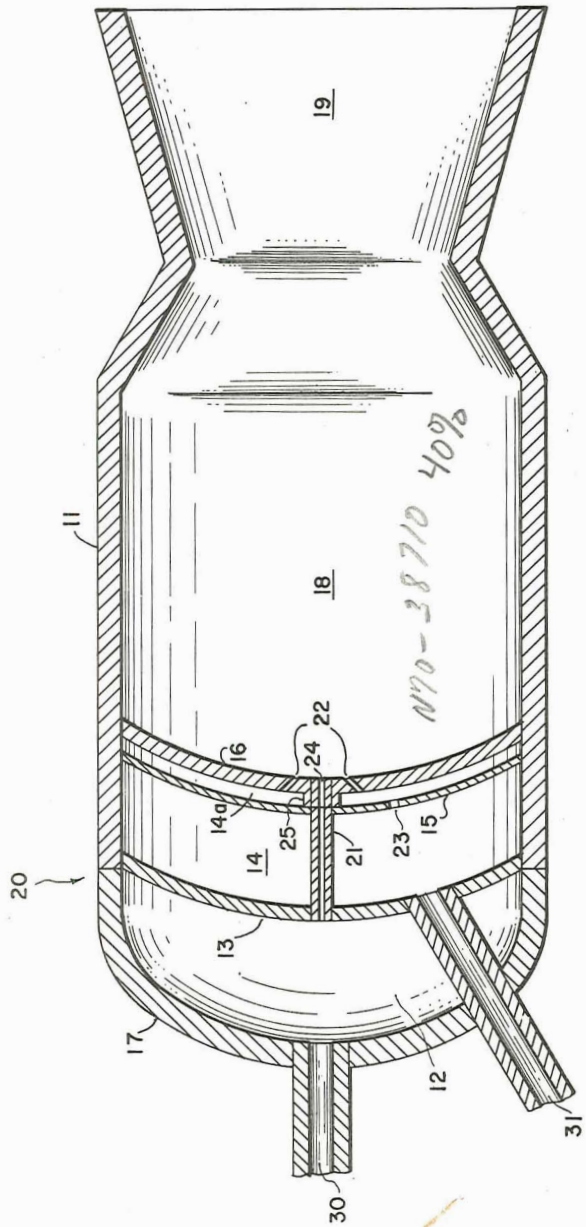

FIG. 1

INVENTOR.
MARCUS F. HEIDMANN

BY G. D. O'Brien
C. M. Woodward
ATTORNEY

570

INJECTOR FOR BIPROPELLANT ROCKET ENGINES

Filed June 19, 1961 3 Sheets-Sheet 2

LEGEND
- ⊗ HYDROGEN DISTRIBUTION ORIFICE
- ○ FUEL INJECTOR ORIFICE
- ◎ OXIDANT INJECTOR ORIFICE

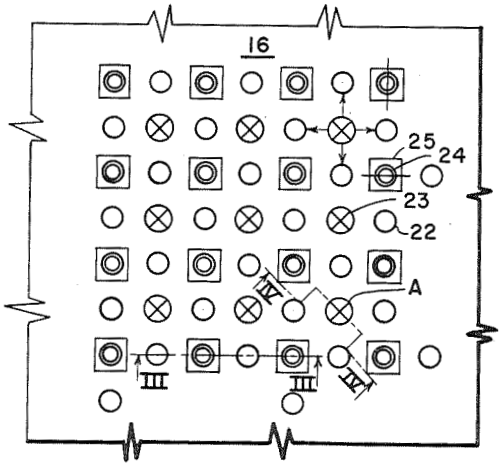

FIG. 2

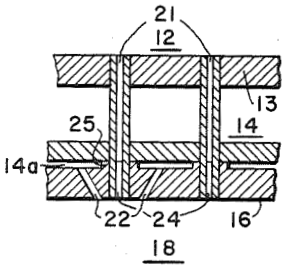

FIG. 3

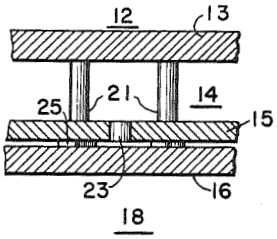

FIG. 4

INVENTOR.
MARCUS F. HEIDMANN
BY G. M. Woodward
ATTORNEY

INJECTOR FOR BIPROPELLANT ROCKET ENGINES

Filed June 19, 1961 3 Sheets-Sheet 3

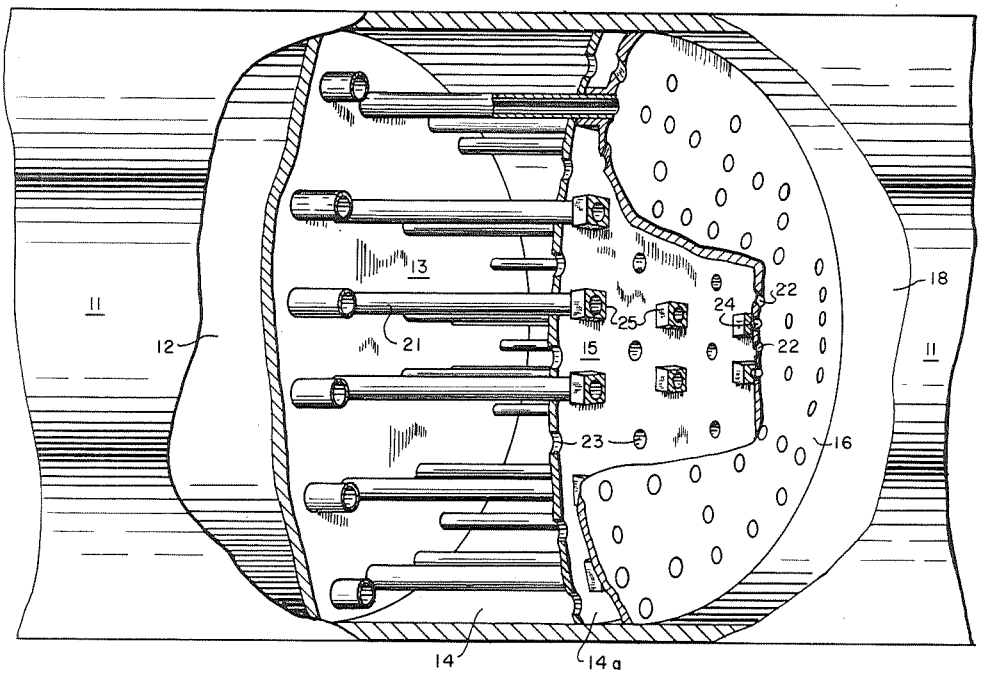

FIGURE 5

MARCUS F. HEIDMANN
INVENTOR.
BY G. D. O'Brien
E. M. Woodward
ATTORNEYS

United States Patent Office

3,122,885

Patented Mar. 3, 1964

1

3,122,885
INJECTOR FOR BIPROPELLANT ROCKET ENGINES

Marcus F. Heidmann, Rocky River, Ohio, assignor to the United States of America as represented by the Administrator of the National Aeronautics and Space Administration

Filed June 19, 1961, Ser. No. 118,202
2 Claims. (Cl. 60—35.6)
(Granted under Title 35, U.S. Code (1952), sec. 266)

The invention described herein may be manufactured and used by or for the Government of the United States of America for governmental purposes without the payment of any royalties thereon or therefor.

This invention relates generally to a device for injecting propellants into a rocket thrust chamber and more particularly to an improved fuel and oxidant injector.

The propellant injector is one of the major components, and at the same time one of the most vulnerable to malfunction, of the rocket engine, functioning to introduce and meter the flow of the propellants to the combustion chamber, while at the same time it atomizes the propellants for ready combustion. It is extremely important that these functions be performed so that a correctly proportioned fuel-oxidizer mixture will result which can be readily vaporized and burned. The particular injector pattern employed, orifice size and arrangement, may of course vary. The design criteria is that the injector must obtain as uniform and predictable a mixture and mass distribution across the injector face plate as is possible, and that it combine lightweight construction with high performance, simplicity and reliability.

A major failing of the prior art is the liability of the injector face plate to ablation and the difficulty of providing for uniform cooling of the injector face so that a uniform stress distribution is obtained during heating and cooling of the injector. In addition, the known prior art injectors in general fail to obtain a uniform pressure drop across the injection orifices of each propellant, which uniform pressure drop is desirable as a characteristic in that such uniformity leads to a more predictable mass and mixture distribution across the injector face, thus obtaining uniformity in combustion. Lastly, it is difficult in the known prior art devices to readily seal joints between the oxidizer and fuel passages because of the physical construction and relationships obtaining in such injectors.

It is a general object of the invention to provide improved means by which combustion liquids may be delivered to a combustion chamber.

It is a further general object of the invention to provide an improved method by which two combustion liquids may be delivered to a combustion chamber.

It is a further object of the invention to provide a bipropellant injector assembly capable of developing a predetermined stream pattern.

It is a more specific object of the invention to provide an improved means of delivering combustion liquids to a combustion chamber so that one of the propellants acts as an internal coolant for a component of the chamber.

It is a further, more specific object of the invention to position the propellant manifolds of a rocket engine so that the manifolds comprise a portion of the walls of the rocket motor while the fuel serves to cool the face of the injector.

It is an additional specific object of the invention to provide an injector assembly wherein a portion of the oxidant system serves to reinforce the structural components of the device.

According to the present invention the foregoing and other objects are obtained by providing a rocket motor with what may best be described as a wafer-like injector

2

assembly. This assembly has manifolds for each of the propellants, which manifolds are "in-line" and form a portion of the rocket motor itself. The fuel manifold communicates with a coolant chamber provided between this manifold and the injector face plate so that fuel in passing from its manifold to the combustion chamber acts on the rear face of the injector face plate to cool the face plate. This construction permits the propellant manifolds to be maintained at near stagnation conditions, since they do not serve as coolant passages, which in turn permits the obtaining of uniform orifice pressure drop, metering, mass distribution and controlled mixture distribution across the injector face. The oxidant propellant is supplied to the combustion chamber through injection tubes which pass through the fuel manifold and coolant chamber to the injector face in the combustion chamber. This configuration aids materially in the structural strength of the assembly, thus permitting lightweight construction. Since these tubes are straight and relatively short they provide an ideal entrance means to the combustion chamber, permitting a uniform pressure drop and forming a jet of known characteristics due to the identical flow entrances to all injection orifices. In addition, the joints occurring between the oxidizer and fuel passages are readily sealed since they occur around small, stable tubes rather than the longer or linear joints which exist in concentric or parallel manifold designs of the prior art. An additional feature of the invention is the "checkerboard" arrangement of the propellant distribution orifices. This construction permits the thrust level to be varied, assuming other parameters are fixed, merely by encompassing a larger or smaller segment of the repeating arrangement, and obtains a maximum interspersal of the propellants upon injection into the combustion chamber.

Other objects and many attendant advantages of the present invention will be apparent from the following detailed description when taken together with the accompanying drawings in which:

FIGURE 1 is a sectional side elevation of an idealized thrust chamber assembly, for orientation purposes only, and showing the general arrangement of the invention;

FIGURE 2 is a front view, with the intervening plates removed, of the checkerboard arrangement of the invention;

FIGURE 3 is a sectional view of the wafer-like construction of FIGURE 2, with the plates in position, taken on the lines III—III;

FIGURE 4 is a sectional view at point "A" of FIGURE 2 along line IV—IV with the intervening plates in position, and

FIGURE 5 is a perspective view of the rocket motor with portions broken away.

Referring to FIGURE 1 for orientation, there is shown a rocket motor **11** comprising a combustion chamber **18** and nozzle portion **19**. A simplified injector assembly embodying the principles of the invention is designated generally by **20**. The injector assembly **20** comprises a curved injector face plate **16** disposed across the cross-sectional area of the chamber and having an oxidant injector orifice **24** centrally formed therein and a plurality of fuel injector orifices **22** obliquely formed therein about the orifice **24**.

A coolant chamber **14***a*, which serves to cool the injector face plate **16**, is formed between a concave fuel distribution plate **15** and the rear face of the injector face plate **16**. Chamber **14***a* is in communication with the combustion chamber **18** through the fuel injection orifices **22** in the injector face plate **16**, and with a fuel manifold **14** (defined by the distribution plate **15** and a concave separation plate **13**) through the distribution orifice **23** in the distribution plate **15**. The compara-

tively small volume of the coolant chamber 14*a* in relation to the relatively large volume of the fuel manifold 14, as seen in FIGURE 1, obtains a substantially stagnant condition within the fuel manifold, as explained in detail hereinafter, and a relatively rapid flow of fuel in and through the coolant chamber 14*a*, thus optimizing the operation of the coolant chamber.

An oxidant manifold 12 is delineated by a concave cover plate 17 and the separation plate 13. The manifold 12 is provided with an oxidant injector tube 21 which passes centrally through the fuel manifold 14, fuel distribution plate 15, cooling chamber 14*a* and injector face plate 16, ending in the oxidant injection orifice 24 at the combustion chamber. Since the only possible source of leakage between the oxidant and fuel manifold is the oxidant injection tube 21, with the exception of the periphery of the separation plate 13, it is obvious that the sealing of the two manifolds from each other is readily accomplished by merely insuring the seal around the oxidant injector tube 21 where it passes through the separation plate 13, a relatively simple operation considering the small size and stability of the portion to be sealed. Also it is obvious that the oxidant injector tube 21 structurally reinforces the assembly while permitting ready access of the oxidant to the combustion chamber and providing a jet of known characteristics due to the uniform pressure drop and near stagnation conditions obtaining with the construction. This is due to the fact that the fuel and oxidant are under uniform pressure within their respective manifolds, since there is no cooling of engine parts at the manifold, and the fuel will not be subject to heating, excessive expansion or convection currents and the unstable results thereof while it is in the manifold. The oxidant, in turn, has a direct communication with the combustion chamber.

The manifolds 12 and 14 are supplied by the lines 30, 31, respectively, disposed through the cover plate 17, from suitable propellant reservoirs (not shown). Although the fuel injection orifices 22 are shown as being formed obliquely for the purpose of obtaining a triplet impinging stream pattern, it is obvious that the pattern could be varied to include any of the well recognized injection types such as doublet impinging, shower head, etc., merely by reorienting the injection orifices.

A specific embodiment of the invention is illustrated in FIGURES 2–5.

The injector as exemplified by this embodiment of the invention, and as most clearly shown in FIGURES 3, 4 and 5, is a wafer-like construction and comprises a fluorine manifold 12 formed by a cover plate (not shown, but illustrated by plate 17 in the orientation view of FIGURE 1) and a separation plate 13. Immediately adjacent to the fluorine manifold 12 is a hydrogen manifold 14, the separation plate 13 serving as the lower bulkhead for the fluorine manifold and the upper bulkhead for the hydrogen manifold. A coolant chamber 14*a*, formed by a hydrogen distribution plate 15 and the rear face of an injector face plate 16, is in communication with the hydrogen manifold 14 by means of hydrogen distribution orifices 23 (see FIGURES 2, 4 and 5).

The fluorine enters the combustion chamber 18 (FIGURES 3 and 5) through fluorine injector tubes 21, which tubes end in injection orifices 24. These injector tubes 21 are in communication with the fluorine manifold 12 and pass through the separation plate 13, hydrogen manifold 14, hydrogen distribution plate 15, coolant chamber 14*a*, and the injector face plate 16. It should be noted that the rear face of the injector face plate 16 is formed with bosses 25 which serve to space the distribution plate 15, seated thereon, from the injector face plate, thus forming the coolant chamber 14*a*. The fluorine injector tubes 21 are most conveniently positioned through these bosses, as best shown in FIGURES 3 and 5. The fluorine injector tubes 21, besides the primary function of carrying the fluorine, also have an important secondary function as structural members which add strength to the wafer construction, thereby permitting a lighter construction. In addition, such construction provides ideal entrance passage to the combustion chamber 18 through the fluorine injection orifices 24 due to the possibility of obtaining both uniform pressure and a jet of known characteristics because of the configuration and relationship of the tubes to the manifold and combustion chamber.

Hydrogen passes in a flow train from the hydrogen manifold 14 through the distribution plate 15 and enters coolant chamber 14*a* (FIGURES 3, 4 and 5) between the distribution plate and face plate 16. The hydrogen enters the coolant chamber 14*a* through the hydrogen distribution orifice 23 (as best shown in FIGURES 4 and 5) in the center of a square of fluorine tubes, i.e. the hydrogen distribution point "A" of FIGURE 2. This arrangement is most efficient in that it permits each hydrogen distribution orifice 23 to partially supply four adjacent hydrogen injection orifices 22 (as illustrated by the flow arrows in the upper, right portion of FIGURE 2) so that a more uniform pressure and mass distribution is obtained. The hydrogen injection orifices 22 in the injector face plate 16 are located between adjacent fluorine tubes 21 and fluorine injector orifices 24 as most clearly shown in FIGURES 2, 3 and 5. This permits each oxidant injection orifice 24 to be impinged by a pair of fuel injection orifices 22. Thus, each hydrogen distribution orifice 23 partially supplies four hydrogen injection orifices 22, while each of the hydrogen injection orifices is symmetrically supplied from two diametrically opposed directions. This construction greatly facilitates providing an even mixture of propellants within the combustion chamber and, obviously, a maximum degree of uniformity of orifice pressure drop, metering, mass distribution and mixture distribution. Thus it is apparent that the described construction reinforces the composite structure while at the same time it provides manifolding and flow paths which serve to carry out the novel method of uniformly cooling the injector plate and producing and maintaining the desired pressure and injection characteristics.

The design concept is not limited to hydrogen and fluorine as propellants of course, but may be adapted to any liquid or gaseous bipropellant combination. The mechanical details such as orifice size, spacing, injector types, etc. are subject to application within wide limits to meet the specific requirements of propellant combinations, size, weight, etc., without departing from the scope of the invention.

It is therefore seen that an injector assembly has been provided for use in a rocket motor which overcomes the prior art objections and deficiencies by providing such an assembly with in-line manifolds, the manifolds being an essentially integral portion of the motor, being easily and expeditiously sealed from one another and being capable of maintenance at near stagnation conditions, one of the manifolds communicating with a combustion chamber through an intermediate chamber which serves to cool the injector face, the other manifold communicating with the combustion chamber by means of short, stable tubes opening directly into the combustion chamber, all of the injection orifices bearing a particular relationship one to another to derive the most efficient mixture and distribution of the propellants. The wafer design is strong, light, and efficient as herein employed. The injector face itself, because of the cooling by one of the propellants and the uniform distribution and mixing of the propellants is not subject to fracture by stresses produced by pressure or nonuniform heating, thus eliminating, substantially, critical seals in the injection face plate.

The structure is easily adaptable to various injector patterns by merely reorienting the orifices but without major structural change, and the thrust levels are vari-

able by encompassing larger or smaller portions of the checkerboard arrangement without structural modifications. In essence, it is seen that the invention discloses an injection system having new features wherein the manifold passages and the coolant passages are separated so that one of the propellants acts to cool the injector face plate; a wafer construction wherein the oxidant injector tubes act as material structural members; and a checkerboard arrangement of injection orifices in an internally cooled injector.

Obviously, many modifications and variations of the present invention are possible in the light of the above teachings. It is, therefore, to be understood that within the scope of the appended claims the invention may be practiced other than as specifically described.

What is claimed is:

1. A wafer-like, checkerboard, fuel injector assembly for a bipropellant rocket motor in which said injector assembly has an injector face plate, separate manifolds for the fuel and for the oxidant, oxidant injector tubes, said oxidant injector tubes ending in injection orifices at the face of said injector face plate, said tubes being in communication with said oxidant manifold, a distribution plate having distribution orifices therein and spaced from said oxidant manifold by said oxidant injector tubes, said distribution orifices affording passage of the fuel to injector orifices in the face plate, each said distribution orifice being located in the center of a square formed by said oxidant injector orifices, said fuel injector orifices being located between adjacent oxidant injector orifices, so that each distribution orifice partially supplies four injector orifices and each fuel injector orifice is symmetrically supplied from diametrically opposed directions.

2. A rocket motor comprising a combustion chamber having a nozzle on one end thereof, a cover plate on the other end of said motor, said cover plate providing one wall of an oxidant manifold, a second plate spaced from said cover plate within said motor and forming a second wall of said oxidant manifold, a third plate spaced longitudinally from said second plate and forming a second wall of a fuel manifold, and a fourth plate in spaced longitudinal relationship to said third plate and forming

an injector face plate, said fourth plate having bosses at spaced, predetermined positions thereon, said bosses forming spacing means for said third plate, a fuel line operatively connecting a fuel reservoir and said fuel manifold, an oxidant line operatively connecting an oxidant reservoir and said oxidant manifold, a plurality of oxidant injection tubes rigidly attached to and extending through said second plate, said third plate and said fourth plate, said tubes each forming an oxidant injector orifice at one face portion of said fourth plate, said third plate having a plurality of orifices positioned therein, each said orifice being located between diagonally aligned oxidant injection tubes so that said orifice is in the center of a square formed by said tubes, and said fourth plate having in addition to said oxidant injection orifices a plurality of fuel injector orifices, said fuel injector orifices being in communication with the chamber defined by said third and fourth plates, and said fuel injector orifices being aligned in one direction with two of said oxidant injector orifices and in the other direction with at least one of said orifices in said third plate; whereby said second, third and fourth plates form a wafer-like construction reinforced structurally by said oxidant injector tubes, the chamber defined by said third and fourth named plates is a coolant chamber of comparatively small volume relative to said other chambers for said fourth plate, and each oxidant injector orifice is operatively associated with two fuel injection orifices from diametrically opposed sides and each fuel injector orifice is supplied by two diametrically opposed distribution orifices.

References Cited in the file of this patent

UNITED STATES PATENTS

2,217,649	Goddard	Oct. 8, 1940
2,396,567	Goddard	Mar. 12, 1946
2,405,785	Goddard	Aug. 13, 1946
2,532,708	Goddard	Dec. 5, 1950
2,733,726	Kaufman et al.	Feb. 7, 1956
2,749,706	Goddard	June 12, 1956
2,929,208	Schultz	Mar. 22, 1960
2,958,183	Singelmann	Nov. 1, 1960