https://ntrs.nasa.gov/search.jsp?R=19700032478 2018-07-26T03:57:16+00:00Z

N 70 41794
CR 113860

SPACE RESEARCH COORDINATION CENTER

CALIBRATION OF VACUUM ULTRAVIOLET MONOCHROMATORS BY THE MOLECULAR BRANCHING - RATIO TECHNIQUE

CASE FILE COPY

BY

M. J. MUMMA AND E. C. ZIPF
DEPARTMENT OF PHYSICS

SRCC REPORT NO. 137

NGL-39-011-030

UNIVERSITY OF PITTSBURGH
PITTSBURGH, PENNSYLVANIA

14 AUGUST 1970

CALIBRATION OF VACUUM ULTRAVIOLET MONOCHROMATORS BY THE MOLECULAR BRANCHING-RATIO TECHNIQUE†

M. J. Mumma* and E. C. Zipf

Physics Department

University of Pittsburgh

Pittsburgh, Pennsylvania 15213

July 1970

ABSTRACT

The Lyman-Birge-Hopfield system of $N_2(a^1\Pi_g - X^1\Sigma_g^+)$ and the CO Fourth Positive system $(A^1\Pi - X^1\Sigma^+)$ are readily excited by low energy electrons (100 eV). Together these molecular systems have numerous emission bands spread uniformly over the wavelength region 1150Å to 2500Å. Because the absolute transition probabilities for both of these systems have been accurately measured, relative measurements of the intensity of these bands excited by electron impact can be used as a convenient technique for calibrating VUV monochromators. This is the basis of the molecular branching ratio technique described in this paper. These relative measurements can be placed on an absolute basis by comparing the band intensities to the brightness of the hydrogen Ly α line (1215Å) and the OI resonance triplet (1302, 4, 6Å) produced by the dissociative excitation of H_2 and O_2 respectively and to a standard lamp at wavelengths greater than 1500Å. The results obtained by this method are shown to be in excellent agreement with spectral response measurements obtained using the atomic branching ratio technique.

I. INTRODUCTION

The absolute calibration of vacuum ultraviolet spectrometers has been hampered in the past by a lack of a convenient light source with a known spectral distribution. There are continuous light sources such as electron synchrotons and black body radiators for which the spectral distribution can be calculated.[1] However, electron synchrotons are not generally available and black body sources require operating temperatures in excess of 3000°K in order to obtain reasonable photon fluxes in the 1000 → 2000Å wavelength range. Black body sources must also be used with considerable care in this wavelength range in order to avoid substantial errors due to scattered light at longer wavelengths. In addition, little is known about the emissivity of materials in this wavelength range and at these elevated temperatures so that the actual output from such a source can only be estimated approximately.

Numerous authors have used the atomic branching ratio method[2] to make multi-point relative calibrations of optical systems. The wavelengths at which relative calibrations may be made via this technique are usually separated by intervals of hundreds and even thousands of Angstrom units, whereas it is often desirable to be able to measure the relative spectral response at intervals of 10 Å.

Aarts et al.[3] have suggested extending the atomic branching ratio method to intensity measurements on vibrational bands of molecules. Aarts and de Heer[4] have used emission intensity measurements of vibrational bands of the $CO(A^1\Pi - X^1\Sigma^+)$ Fourth Positive system to calibrate their optical system, presuming that the electronic transition moment was constant over

the band system. Mumma et al.[5] have recently shown that, in fact, the electronic transition moment decreases with increasing r-centroid for the $CO(A^1\Pi - X^1\Sigma^+)$ system. This variance must be included when deriving a relative calibration curve from intensity measurements.

In the present work, we have used intensity measurements on 32 vibrational bands of the $N_2(a^1\Pi_g - X^1\Sigma_g^+)$ Lyman-Birge-Hopfield system, occurring in the region 1275Å - 1850Å, to determine the relative spectral response of a normal incidence vacuum ultraviolet monochromator. An independent calibration was made using atomic branching ratio measurements on selected multiplets of atomic nitrogen and these results were in excellent agreement with the relative spectral response curve obtained from the vibrational branching ratio measurements. Because this technique requires the use of a comparatively simple electron gun and little else, it can be readily incorporated into a more elaborate experiment. This arrangement permits routine calibration checks with a minimum of inconvenience.

II. THE EXPERIMENTAL METHOD

A. Theory

In the atomic branching ratio method,[2] atoms in an upper energy level, E_k, make electric dipole allowed transitions to any of several lower energy levels, E_i, E_j. If the number density of atoms in level E_k is $n_k(cm^{-3})$ and the transition probability to level E_i is $A_{ki}(sec^{-1})$, then the volume emission rate, $\beta_{ki}(cm^{-3}sec^{-1}(4\pi \text{ steradians})^{-1})$, for photons of wavelength λ_{ki} emitted in the transition is given by

$$\beta_{ki} = n_k \quad A_{ki} \tag{1}$$

If the emitted photons are collected by a spectrometer system such as is shown in Figure 1, then the counting rate measured by the detector, S(counts/second), will be related to a geometrical collection factor, G, and the wavelength-dependent spectral response of the collection-detection system, Q, by the expression

$$S_{ki} = GQ_{ki} \beta_{ki} \tag{2}$$

Equation (2) assumes an isotropic distribution of the emitted photons and negligible absorption and reemission of photons by intervening gas molecules. The counting rate for photons arising from transition $E_k \rightarrow E_j$ is given by a relation analogous to equation (2), so that the relative spectral responses of the collection-detection system for photons of wavelengths λ_{ki} and λ_{kj} are given by

$$\frac{Q_{ki}}{Q_{kj}} = \frac{S_{ki}}{S_{kj}} \frac{A_{kj}}{A_{ki}} \tag{3}$$

Knowledge of the relative transition probabilities enables us to calculate the relative spectral responses of the optical detection system at the two wavelengths by using equation (3).

The method is extended to emission intensity measurements on the vibrational bands of molecular band systems in the following way. The total volume emission rate, $\beta_{v' v''}$, for the (v' v") vibrational band emitted by molecules making the transition from an upper electronic energy level

(X_2, v') to a lower electronic energy level (X_1, v'') is given by

$$\beta_{v' v''} = n_{v'} A_{v' v''} \tag{4}$$

The total counting rate, $S_{v' v''}$, of the (v', v'') band is again given by a relation analogous to equation (2).

$$S_{v' v''} = GQ_{v' v''} \beta_{v' v''} \tag{5}$$

The relative total counting rates of two bands in the same v" progression (v' - constant) are related to the relative spectral responses of the collection-detection system and the transition probabilities of the bands by the following expression

$$\frac{Q_{v' v''_i}}{Q_{v' v''_j}} = \frac{S_{v' v''_i}}{S_{v' v''_j}} \frac{A_{v' v''_j}}{A_{v' v''_i}} \tag{6}$$

If the molecular transition is allowed by an electric dipole interaction, then the transition probability of the (v', v'') band may be written as follows

$$A_{v' v''} = q_{v' v''} \nu^3_{v' v''} R_e^2 (\bar{r}_{v' v''}) \tag{7}$$

where $q_{v' v''}$ is the Franck-Condon factor, $\nu_{v' v''}$ is the wavenumber, $R_e(\bar{r}_{v' v''})$ is the electronic transition moment, and $\bar{r}_{v' v''}$ is the r-centroid

of the (v', v") transition.

In general, the electronic transition moment is not constant over the band system and therefore the particular functional dependence of R_e on $\bar{r}_{v' \, v''}$ must usually be included in equations (7) and (6).

An example of a band system for which the electronic transition moment is known to be constant is the N_2 Lyman-Birge-Hopfield (LBH) system.[6,7] The $N_2(a^1\Pi_g - X^1\Sigma_g^+)$ transition is allowed via electric quadrupole and magnetic dipole interactions and bands of this system lie in the wavelength range from ~ 1200Å to ~ 2200Å. McEwen[6] has shown that the effective electronic transition moment is constant for this system and Shemansky[7] has verified this result and has measured absolute transition probabilities for bands of this system. Hence, the relative spectral response of an optical spectrometric system may be extracted from emission intensity measurements on bands of the N_2 (LBH) system by using equation (6) and the absolute transition probabilities.

B. INSTRUMENTATION

Since the apparatus has been described in detail elsewhere[8] only a brief description will be given here. The experimental apparatus is shown schematically in Figure 1. An electrostatically focussed beam of nominally monoenergetic electrons axially traversed a cylindrical collision chamber and was collected by a Faraday cup. Photons emitted in the interaction region traversed a LiF window and were collected at 90° to the electron beam by a McPherson Model 225 normal incidence vacuum ultraviolet monochromator. Photons transmitted by the monochromator were detected by an EMR 541G-08-18 solar blind photomultiplier tube and

appropriate pulse counting circuitry. The electron beam was aligned parallel to the vertical dimension of the monochromator entrance slit.

Intensity profiles of emission features were obtained by scanning the monochromator in wavelength and simultaneously accumulating the detected photon counts with a Hewlett-Packard multi-channel analyzer which was operated in the multi-scaling mode. In this way a histogram of emission features was stored for subsequent readout and data-analysis. Equal entrance and exit slit widths were used and the monochromator was advanced manually between emission features, thus minimizing the effects of long term drifts in the electron beam current and the N_2 pressure. The electron collector and N_2 pressure were monitored throughout data taking periods and these parameters drifted less than 1% in the time required to scan a molecular band.

III. N_2 LYMAN-BIRGE-HOPFIELD SYSTEM

The $N_2(a^1\Pi_g)$ state was excited by an incident beam of 100 eV electrons and the beam current was typically 2×10^{-4} amperes. The N_2 pressure was less than 10 milli-torr and therefore absorption of photons of the N_2(LBH) band system was completely negligible. The absorption spectrum of N_2 in the region 1200 - 2000 Å consists of absorption features of the forbidden transition $N_2(a^1\Pi_g \rightarrow X^1\Sigma_g^+)$ and the absorption cross section is less than 4×10^{-21} cm^2 throughout this region.[9] Hence, an optical path length of ~ 76 torr-cm is required to produce ~ 1% absorption, whereas the maximum optical path length in our collision chamber was 5×10^{-2} torr-cm.

Radiative lifetimes of vibrational levels of the $N_2(a^1\Pi_g)$ state are typically 1.5×10^{-4} seconds[7] so that in the absence of collisions thermal

molecules travel a mean distance ~ 6 cm before radiating. The collision chamber diameter was ~ 5 cm and the molecular mean free path at 10 millitorr was ~ 1 cm so that collisional quenching may depopulate the $N_2(a^1\Pi_g)$ state. These considerations are of importance if it is necessary to know the local number density, $n_{v'}$. For relative intensity measurements on bands belonging to a specific v" progression the local number density does not enter equation (6). The N_2(LBH) radiation constituted a diffuse source for these excitation conditions and the monochromator accepted photons from an emitting volume having cross sectional area ~ 1 cm x 1 cm and depth 5 cm.

Vibrational bands of each v" progression (v' = 1 → 6) of the N_2(LBH) band system were scanned sequentially in v" and the total number of counts in each fully resolved band was obtained by summing the counts in the histogram of that band. Figure 2 shows the histograms of bands in the (v' = 1, v") progression which were taken at a resolution of 0.88 Å and an equivalent channel width of 0.25 Å. The total number of counts in each band was obtained by summing over 24 channels, starting 6 channels before the channel containing the peak number of counts, and these totals were taken to be $S_{v'\ v''}$ in equation (6). Relative spectral responses were than calculated with respect to the (1,0) band via equation (6). Similar measurements were made on 7 bands of the (v' = 2, v") progression and on 7 bands of the (v' = 3, v") progression.

Total intensity measurements on bands of the (4, v"), (5, v"), and (6, v") progression were complicated by extensive overlapping of bands. Therefore, we developed a method for extrapolating the total counting rate

of a band from measurements made on a selected portion of that band. The ratio of the counts, $M_{v'\ v''}$, in a three channel passband centered on the peak histogram channel to the total intensity, $S_{v'\ v''}$, of a band was calculated for the instrumental parameters used in these measurements.

The volume emission rate, $\beta_{J'\ J''}$, of the (J' J") rotational lines of the (v', v") band is given by

$$\beta_{J'\ J''} = n_{v'} \frac{S^B_{J'}}{R_{v'}} \exp\left(-E_{J'}/KT_{ROT}\right) \left[C_4 D_4\ {}^2\nu^5_{J'\ J''} + C_2 D_2\ {}^2\nu^3_{J'\ J''}\right] R_e^2(\bar{r}_{v'\ v''}) \tag{8}$$

where $S^B_{J'}$ is the line strength factor for the (J', J") line,

T_{ROT} is the rotational temperature of the upper level,

$E_{J'}$ is the rotational energy of the upper level,

$D_4{}^2$, $D_2{}^2$ are vibrational matrix elements,

C_2, C_4 are constants,

$R_{v'}$ is the rotational partition function, and the other quantities have been defined earlier in this paper.

For equal slit widths, the monochromator transfer function is triangular in shape and is given by

$$T_m(\lambda_c) = \begin{cases} \dfrac{1 - |\lambda - \lambda_c|}{\Delta\lambda} & , |\lambda - \lambda_c| \leq \Delta\lambda \\ 0 & , |\lambda - \lambda_c| > \Delta\lambda \end{cases} \tag{9}$$

where $\Delta\lambda$ is the resolution for the slit settings and λ_c is the wavelength

at the center of the passband. The detected counting rate is given by

$$S(\lambda_c) = C_o G Q_{\lambda_c} \Sigma_{\lambda_{J'\ J''}} [T_M(\lambda_{J'\ J''})\ S_{J'} \exp(-E_{J'}/KT_{ROT}) n_{v'}] \qquad (10)$$

The detected intensity profile was calculated by varying λ_c over the extent of the band and normalizing $S(\lambda_c)$ to 1.0 at the maximum. We used the line strength factors given by Shemansky[7] and a rotational temperature of 390°K to calculate the emission profile via equation (10). A histogram of this theoretical emission profile was formed using a channel width of 0.25 Å and assuming that the rotational line of lowest wavelength entered monochromator bandpass just as the multi-channel analyzer addressed a new channel. A calculated histogram for the (1,1) band is compared to an experimentally measured histogram in Figure 3. The ratio $M_{v'\ v''}/S_{v'\ v''}$ was calculated. Taking a three channel sum for $M_{v'\ v''}$ helped to correct for slewing of the emission profile about the peak channel, caused by uncertainty in the entry phase of photons stored in the first non-zero channel of an experimentally measured histogram. Figure 4 shows a comparison between the theoretically calculated and experimentally measured ratios $M_{v'\ v''}/S_{v'\ v''}$ for the (2, v") progression. Similarly good agreement was obtained for bands of the (1, v") and (3, v") progression. Theoretically calculated ratios were then used to extrapolate total band intensities from measured values of $M_{v'\ v''}$ for 3 bands of the (4, v") progression, 5 bands of the (5, v") progression, and 4 bands of the (6, v") progression. Relative quantum efficiency curves were determined for these progressions as described earlier.

The data for these six v" progressions were combined in order to determine the best relative quantum efficiency curve. A data set ($\lambda_{v'\ v''}$, $a_{v'}Q_{v'\ v''}$) was defined and a_1 was arbitrarily set equal to one. The values of $a_2 \rightarrow a_6$ which gave a least squares fit of the data to a fourth order equation in λ were determined using a computer. The resulting spectral response curve was identical above 1300 Å with the curve shown in Figure 5, which was derived from a combination of molecular branching ratio measurements and atomic multiplet branching ratio measurements.

IV. ATOMIC NITROGEN MULTIPLETS

The molecular branching ratio results were checked by making intensity measurements on selected atomic nitrogen (NI) multiplet pairs which branched from a common upper energy level (see Table I). Absolute transition probabilities for the NI multiplets listed in Table I have been measured by Labuhn[10] and Lawrence and Savage[11]. These multiplets were produced in our collision chamber by electron impact dissociative excitation of N_2 under the same experimental conditions used in producing the N_2 (LBH) band system.

The transitions listed in Table I lead to metastable states of the ground configuration of NI and it is the metastable atom density which will be responsible for possible absorption effects. Theoretically derived estimates[12] of the column density of metastable atoms predict that absorption will be negligible for the experimental conditions described here (10 millitorr of N_2, 2×10^{-4} amperes of 100 eV electrons, and a maximum column length of 2.5 cm). These predictions were verified experimentally by observing

a constant 1493 Å/1743 Å counting ratio and 1311 Å/1164 Å counting ratio for N_2 pressures up to at least 20 millitorr.

The total emission intensity of these multiplets was obtained in a manner similar to that used in scanning the N_2(LBH) bands, and the relative spectral responses were determined via equation (3). The relative spectral responses as determined from atomic branching ratio measurements on the 1493Å and 1743 Å multiplets were in excellent agreement with the relative spectral responses as determined from measurements on the N_2(LBH) band system (Figure 5). Similar intensity measurements were made on the other NI multiplets listed in Table I and the relative spectral responses at those wavelengths were calculated using Labuhn's experimentally determined transition probabilities and equation (3). For the excitation conditions described here, the total intensity of several NI multiplets had to be corrected for overlap by a band of the N_2(LBH) band system. This was done by summing the total intensity of band + multiplet and then subtracting the band intensity, which was related to the measured intensity of a resolved band in the same v" progression by the expression

$$S_{v' v''_i} = \frac{A_{v' v''_i}}{A_{v' v''_j}} \frac{Q_{v' v''_i}}{Q_{v' v''_j}} S_{v' v''_j} \qquad (11)$$

The required correction was ~ 4% for the total intensity of the NI 1493 multiplet and ~ 20% for the NI 1412 Å multiplet.

It should be noted that the upper levels of NI which give rise to the multiplets observed in this work have radiative lifetimes of less

than 10^{-8} seconds so that even if the dissociation fragments have ~ 1 eV of kinetic energy (corresponding to a velocity of 3.5×10^5 cm/sec), the limits of the emitting region correspond roughly to the electron beam limits and hence the emitting region may be considered to be a line source. Conversely, the lifetime of a vibrational level of the $N_2(a^1\Pi_g)$ state is typically 1.5×10^{-4} seconds so that even thermal molecules (~ 4×10^4 cm/sec) form a diffuse source of LBH band radiation. The good agreement between the atomic multiplet data and LBH molecular band data in Figure 4 suggests that spatial effects were unimportant in our experiment.

The data set ($\lambda_{v' \; v''}$, $a_{v'} Q_{v' \; v''}$) obtained by measurements on the N_2(LBH) band system was augmented by data from the atomic branching ratio measurements and a_7, a_8, a_9 were assigned to the data from the multiplet pairs in the order listed in Table I. This nine-fold data set (6 LBH progressions and 3 atomic branching ratio pairs) was fitted to a fourth order curve in wavelength and the results are shown in Figure 5. The smooth curve in Figure 5 is the curve of best fit and the crosses and dots are renormalized data derived from the emission intensity measurements on the N_2(LBH) bands and NI atomic multiplets, respectively.

V. RESULTS AND DISCUSSION

Measurements of the intensities of selected bands of the N_2(LBH) system have been used to calibrate the relative spectral response of a window-monochromator-photomultiplier combination at 32 wavelengths in the spectral range 1275 Å - 1850 Å. The relative spectral response curve determined in this way is in excellent agreement with relative response

values determined via independent measurements on multiplets of atomic nitrogen. Intensity measurements on the NI multiplet pairs 1412 Å - 1243 Å and 1311 Å - 1164 Å have been used to extend the calibration to lower wavelengths. The spectral response curve from 1150 Å - 1900 Å was then determined via a least squares fit procedure and is shown in Figure 5.

The calibration range can be extended from 1150 Å to 2500 Å by augmenting the N_2(LBH) measurements with similar measurements on the CO Fourth Positive system ($A^1\Pi$ - $X^1\Sigma^+$). When using the CO Fourth Positive system, a correction for the variation of the electronic transition moment with r-centroid must be included.[5] These relative intensity measurements can be placed on an absolute basis by directly comparing the band intensities to the brightness of the hydrogen Ly α line (1215.6Å) and the OI resonance triplet (1302, 4, 6Å) produced by the dissociative excitation[13,14,15] of H_2 and O_2 respectively and to a standard lamp at wavelengths greater than 1500 Å[16]. In this way the sensitivity of a VUV monochromator can be determined over this wavelength range with an absolute accuracy of $\pm$ 10%. This technique is particularly convenient because it only requires the use of a comparatively simple and inexpensive electron gun that can easily be incorporated in a more elaborate experiment.

ACKNOWLEDGEMENTS

The authors wish to thank W. L. Borst and E. J. Stone for their valuable assistance.

FOOTNOTES AND REFERENCE

† This research was supported in part by the Advanced Research Project Agency, The Department of Defense, and was monitored by the U. S. Army Research Office-Durham, under Contract No. DA-31-124-ARO-D-440 and by the National Aeronautics and Space Administration (NGL 39-011-030).

* Present Address: Astrochemistry Branch, Laboratory for Extraterrestrial Physics, NASA/Goddard Space Flight Center, Greenbelt, Maryland 20771.

1. E. Ya. Schreider; Sov. Phys. Tech. Phys. 9, 12, 1609 (1965).
2. J. A. R. Samson, Techniques of Vacuum Ultraviolet Spectroscopy, (John Wiley and Sons, N. Y., 1967). p. 288-90.
3. J. F. M. Aarts, F. J. de Heer, B. F. J. Luyken, F. W. Saris, L. Vriens, and D. A. Vroom, Physics 41, 209 (1969).
4. J. F. M. Aarts and F. J. de Heer, J. Opt. Soc. Am. 58, 1665 (1968).
5. M. J. Mumma, E. J. Stone, and E. C. Zipf, to be published.
6. D. J. McEwen, Intensity Measurements of the Lyman-Birge-Hopfield Band System of N_2, Ph. D. Thesis, University of Western Ontario (1965).
7. D. E. Shemansky, J. Chem. Phys. 51, 5487 (1969).
8. M. J. Mumma and E. C. Zipf, to be published.
9. K. Watanabe and F. F. Marmo, J. Chem. Phys. 25, 5, 965 (1956).
10. F. Labuhn, in "Atomic Transition Probabilities H to Ne, Vol. 1", ed. W. L. Wiese, B. M. Glennon, and M. W. Smith, U. S. Government Printing Office, Washington, D. C. (1966).
11. G. M. Lawrence and B. D. Savage, Phys. Rev. 141, 1, 67 (1966).
12. M. J. Mumma, Dissociative Excitation of Atmospheric Gases, Ph. D. Thesis, Physics Dept., University of Pittsburgh (1970).

13. W. L. Fite and R. T. Brackmann, Phys. Rev. 112, 1151 (1958).

14. G. M. Lawrence, Phys. Rev. A (to be published).

15. M. J. Mumma and E. C. Zipf, submitted to Phys. Rev.

16. J. Buckley, submitted to Applied Optics.

Table I

Transition Probabilities for Multiplets of NI

$\lambda(\mathring{A})$	Multiplet	$A_{ki}(10^8\ sec^{-1})$ Lawrence and Savage[11]	Labuhn[10]	A_{ki}/A_{kj}
1243	$2P^3\ {}^2D^0 - 3s\ {}^2D$	4.1	4.6	9.1
1412	$2P^3\ {}^2P^0 - 3s\ {}^2D$		0.52	
1493	$2P^3\ {}^2D^0 - 3s\ {}^2P$	3.9	5.5	2.75[a]
1743	$2P^3\ {}^2P^0 - 3s\ {}^2P$	1.4	2.0	2.79[b]
1164	$2P^3\ {}^2D^0 - 3d\ {}^2D$		0.47	0.36
1311	$2P^3\ {}^2P^0 - 3d^2\ D$		1.3	

a. Lawrence and Savage used the branching ratios of Labuhn to determine the transition probabilities from the radiative lifetime of the NI($3s\ {}^2P$) state.

b. Calculated from Labuhn's data.

FIGURE CAPTIONS

Figure 1 A schematic drawing of the experimental apparatus.

Figure 2 A histogram of the measured emission profiles for bands of the N_2 Lyman-Birge-Hopfield system, v' = 1. The wavelength equivalent channel width is 0.25 Å. The band designation (v', v") and the bandhead wavelength are given above each band.

Figure 3 A computed histogram of the (1,1) vibrational band of the N_2 Lyman-Birge-Hopfield band system, for the experimental system shown in Figure 1. The rotational temperature used was 390°K, which was comparable to the equilibrium temperature of the collision chamber walls. The crosses are in experimentally measured histogram of the (1,1) band. The bandhead wavelength is ~ 1464 Å.

Figure 4 The percent of the total band intensity included in a three channel interval centered on the peak. The crosses are experimental values and the dots are theoretically calculated values.

Figure 5 The relative spectral response of the window-monochromator-detector combination. The crosses are derived from measurements on the N_2 Lyman-Birge-Hopfield System and the dots are derived from measurements on multiplets of atomic nitrogen. The smooth curve represents the least squares fit to the data.

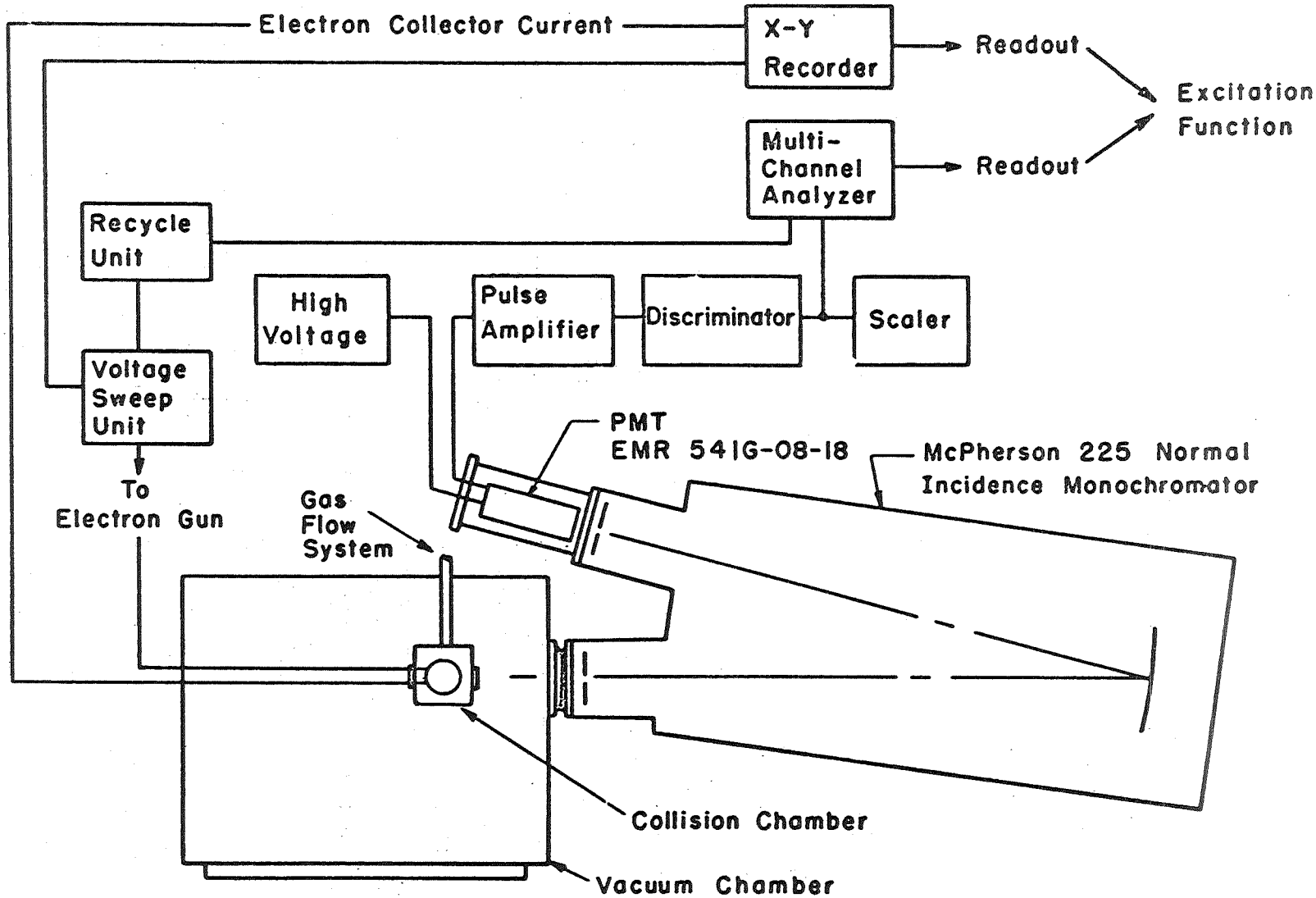
Electron Collector Current
X-Y Recorder
Readout
Excitation Function
Multi-Channel Analyzer
Readout
Recycle Unit
High Voltage
Pulse Amplifier
Discriminator
Scaler
Voltage Sweep Unit
To Electron Gun
PMT EMR 541G-08-18
McPherson 225 Normal Incidence Monochromator
Gas Flow System
Collision Chamber
Vacuum Chamber

Figure 1

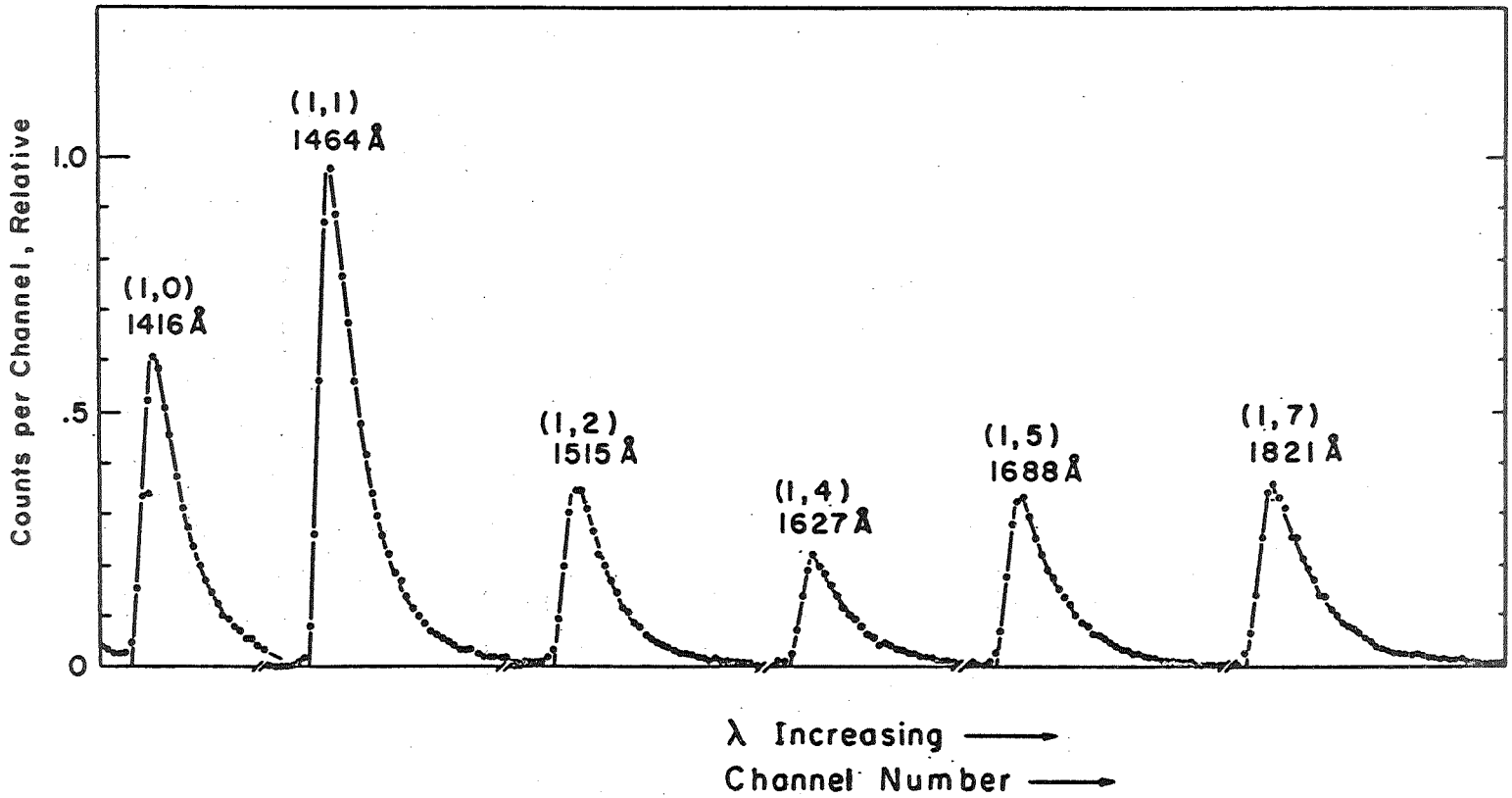
Counts per Channel, Relative
1.0
.5
0
(1,0)
1416 Å
(1,1)
1464 Å
(1,2)
1515 Å
(1,4)
1627 Å
(1,5)
1688 Å
(1,7)
1821 Å
λ Increasing
Channel Number

Figure 2

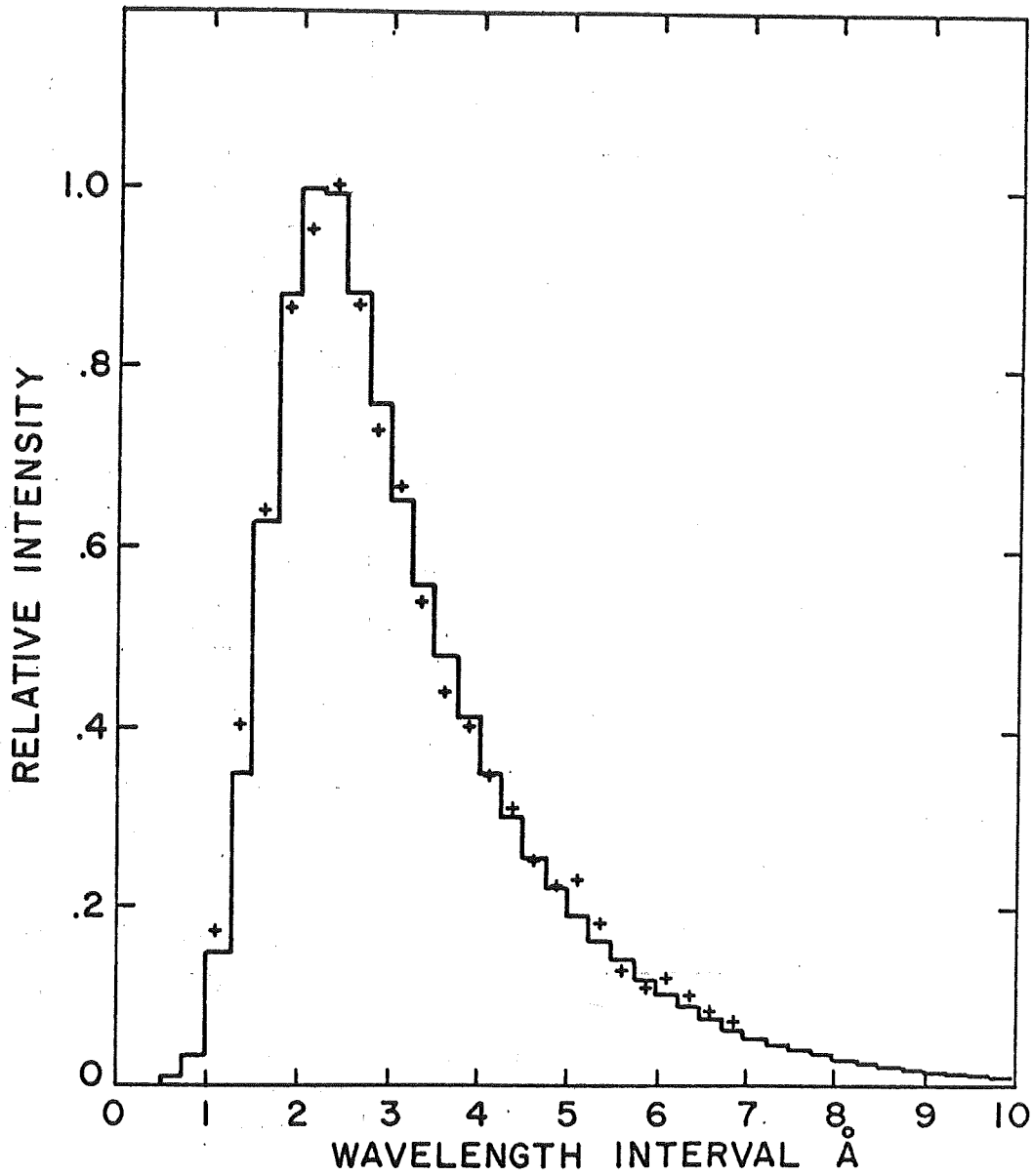
RELATIVE INTENSITY
1.0
.8
.6
.4
.2
0
0
1
2
3
4
5
6
7
8
9
10
WAVELENGTH INTERVAL Å

Figure 3

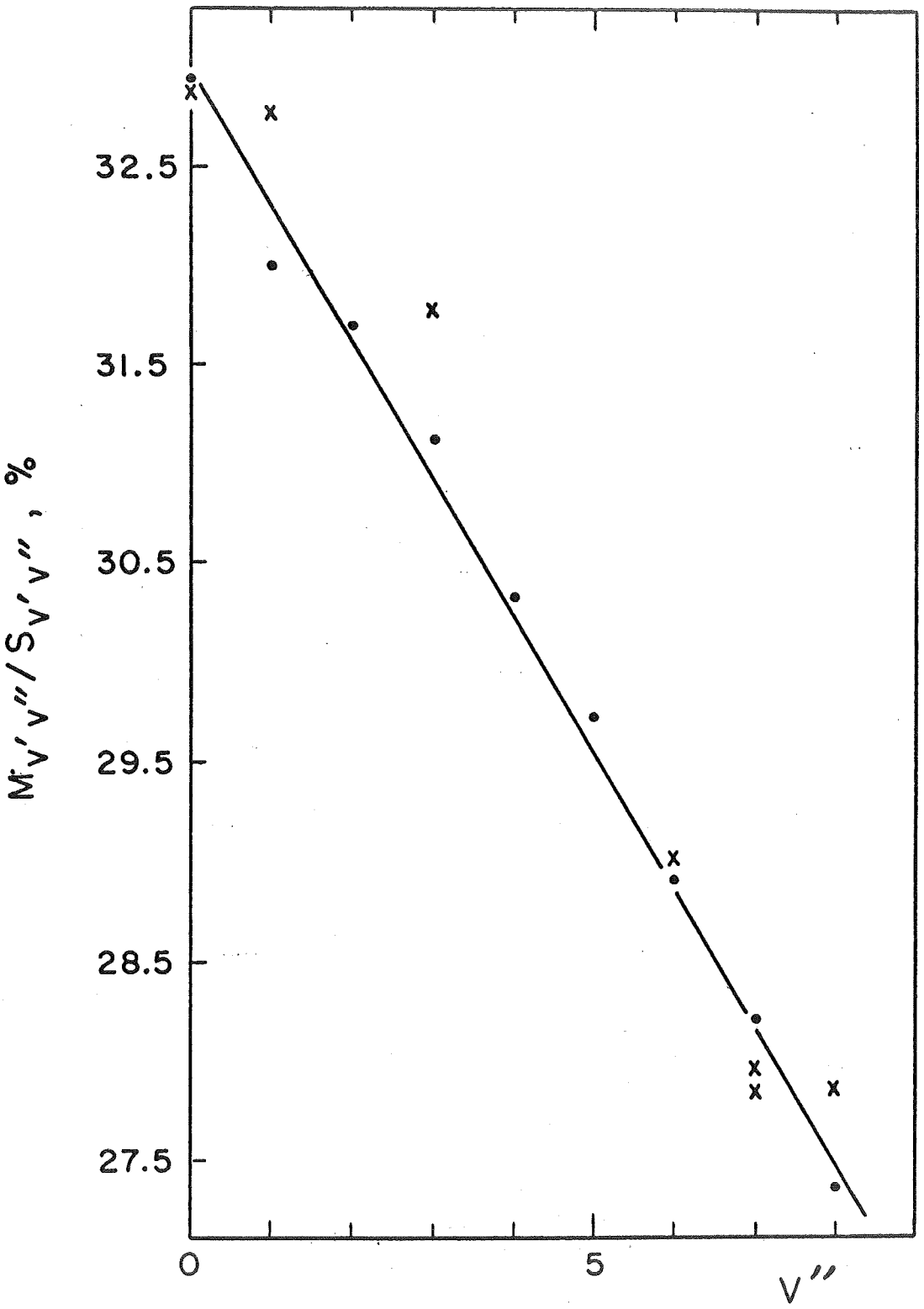

Figure 4

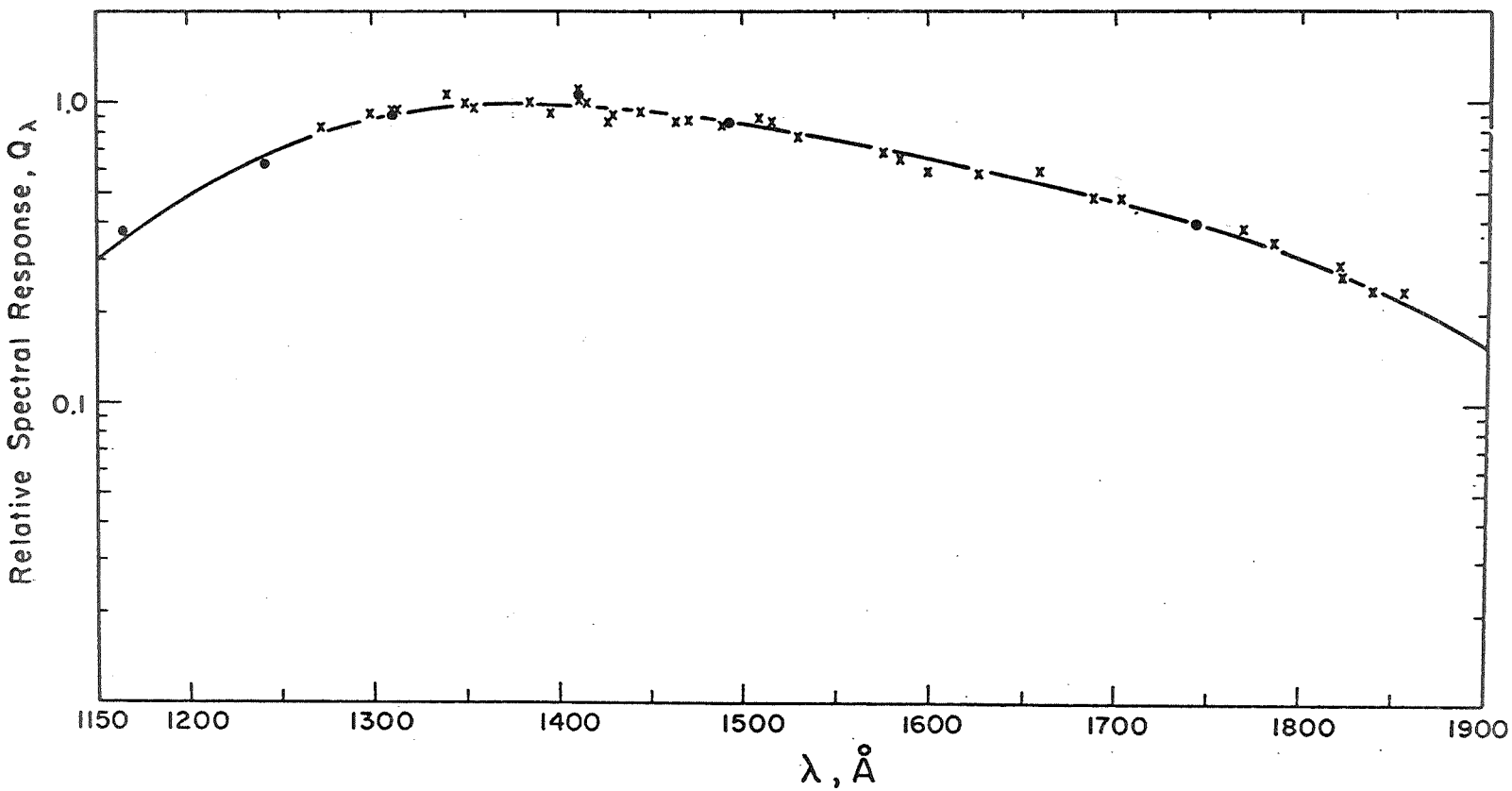
Relative Spectral Response, Q_λ
1.0
0.1
1150
1200
1300
1400
1500
1600
1700
1800
1900
λ, Å

Figure 5

The Space Research Coordination Center, established in May, 1963, has the following functions: (1) it administers predoctoral and postdoctoral fellowships in space-related science and engineering programs; (2) it makes available, on application and after review, allocations to assist new faculty members in the Division of the Natural Sciences and the School of Engineering to initiate research programs or to permit established faculty members to do preliminary; work on research ideas of a novel character; (3) in the Division of the Natural Sciences it makes an annual allocation of funds to the interdisciplinary Laboratory for Atmospheric and Space Sciences; (4) in the School of Engineering it makes a similar allocation of funds to the Department of Metallurgical and Materials Engineering and to the program in Engineering Systems Management of the Department of Industrial Engineering; and (5) in concert with the University's Knowledge Availability Systems Center, it seeks to assist in the orderly transfer of new space-generated knowledge in industrial application. The Center also issues periodic reports of space-oriented research and a comprehensive annual report.

The Center is supported by an Institutional Grant ~~(NsG-416)~~ from the National Aeronautics and Space Administration, strongly supplemented by grants from the A. W. Mellon Educational and Charitable Trust, the Maurice Falk Medical Fund, the Richard King Mellon Foundation and the Sarah Mellon Scaife Foundation. Much of the work described in SRCC reports is financed by other grants, made to individual faculty members.