CDS TECHNICAL REPORT 70-4

AD-711102

H T BANKS
MARC Q JACOBS
M R LATINA

THE SYNTHESIS OF OPTIMAL CONTROLS FOR LINEAR PROBLEMS WITH RETARDED CONTROLS

JULY, 1970

CENTER FOR DYNAMICAL SYSTEMS

RECEIVED
NASA STI FACILITY
INPUT BRANCH
OCT 1970

FACILITY FORM 602
N70-42296
(ACCESSION NUMBER)
97
(PAGES)
CR-114256
(NASA CR OR TMX OR AD NUMBER)
(THRU)
1
(CODE)
19
(CATEGORY)

DIVISION OF APPLIED MATHEMATICS BROWN UNIVERSITY

Reproduced by
NATIONAL TECHNICAL
INFORMATION SERVICE
Springfield, Va 22151

THE SYNTHESIS OF OPTIMAL CONTROLS[+] FOR LINEAR PROBLEMS WITH RETARDED CONTROLS

by

H. T. Banks
Marc Q. Jacobs
M. R. Latina

Center for Dynamical Systems
Division of Applied Mathematics
Brown University
Providence, Rhode Island

[+]This research was supported in part by the National Aeronautics and Space Administration under Grant No. NGL 40-002-015, in part by the Air Force Office of Scientific Research under Grant No. AF-AFOSR 693-67B and in part by the National Science Foundation under Grant No. GP 15132.

ABSTRACT

Optimization problems involving linear systems with retardations in the controls are studied in a systematic way. Some physical motivation for the problems is discussed. The topics covered are: controllability, existence and uniqueness of the optimal control, sufficient conditions, techniques of synthesis, dynamic programming. A number of solved examples are presented.

1. Introduction

Optimal control problems involving systems with delays in the state variables have been studied extensively and the difficulties encountered in such problems have been well documented [1, 2, 8, 15, 17, 23, 24, 27 and the bibliographies of 2, 24]. Recently, more sophisticated models with systems containing retardations in both the state and control variables have come under investigation [2, 4, 6, 7, 12, 14, 17, 24]. In [2] Banks and Jacobs presented the mathematical foundations necessary for the study of very general control systems modeled by equations of the type

$$\dot{x}(t) = \int_{-\tau}^{0} x(t+s)d_sF(t,s) + \int_{-\tau}^{t} h(u(s),s)d_sG(t,s)$$

where F and G are Stieltjes measures. The purpose of this paper is to investigate the effect (from both the theoretical and computational points of view) of lags in the control variables. We shall attempt to do this in a number of ways, but our aim always will be to point out the pathological differences between systems with delayed controls and those without. In order to isolate the effect of delays in the controls, we shall consider only the simplest models with lags in controls, and ignore any retardations in the state variables. Indeed, the examples of section 7 below illustrate very well the novel behavior of solutions to optimal control problems with these types of models.

In section 2, motivated by models arising in current applications,

we formulate several different types of systems which appear to be of interest. Controllability of these systems is considered in section 3 where results involving controllability matrices analogous to those for non-delay linear systems are presented. In the next two sections the questions of existence, uniqueness, and sufficiency conditions for time optimal problems are considered in the spirit of [11]. In section 6 we extend to our systems a synthesis technique due to Neustadt [21]. A number of solved examples are presented in section 7. These fundamental examples, governed by systems which at time t depend on the control at times t and $t - h$, are intrinsically more complicated than those involving systems which at time t depend on the control only at time $t - h$ and give rise to prediction problems. Finally, the paper is concluded with a section concerning the applicability of dynamic programming techniques to certain cases of the systems under study, including mention of a Riccati type theory for quadratic payoff problems.

We have tried to present numerous examples throughout the paper in order to provide the reader with an insight in regard to limitations of our results.

2. Notation and Formulation of Problems

We shall denote by $\mathcal{L}_{pq}$ the real vector space of all $p \times q$ matrices. If $A \in \mathcal{L}_{pq}$ the transpose of A will be denoted by A^*. We shall not distinguish a column vector from its form as a row vector since it will always be transparent which form is intended by the order of multiplication in any matrix operations.

In order to facilitate the discussion of several types of problems involving various different system equations some special notation is required. We denote by $\mathcal{S}_h(A,B_0,B_1)$ the system

$$\dot{x}(t) = Ax(t) + B_0u(t) + B_1u(t-h)$$

where $A \in \mathcal{L}_{nn}$, B_0, $B_1 \in \mathcal{L}_{nm}$ and h is a positive constant. The system

$$\dot{x} = Ax(t) + Bw(t)$$

is denoted by $\mathcal{S}(A,B)$ where $A \in \mathcal{L}_{nn}$, and $B \in \mathcal{L}_{nr}$.

The term <u>control</u> means a triple $\{u,t_0,t_1\}$ where $u: [t_0-h,t_1] \to R^m$ is a function and t_0,t_1 are real numbers.

<u>Definition 2.1.</u> Given $U \subset R^m$ the symbol $\mathcal{S}_h^1(A,B_0,B_1)$ denotes the system $\mathcal{S}_h(A,B_0,B_1)$ with constraint

$$u(t) \in U, \qquad t \in [t_0-h,t_1]$$

on the controls $\{u,t_0,t_1\}$, $t_0,t_1 \in R$.

<u>Definition 2.2.</u> Given $U \subset R^m$ and a bounded measurable function $v_0: [-h,0] \to U$, we use $\mathcal{S}_h^2(A,B_0,B_1)$ to denote the system $\mathcal{S}_h(A,B_0,B_1)$ with constraints

$$u(t) \in U, \qquad t \in [t_0,t_1]$$
$$u_{t_0} = v_0$$

on the controls, $\{u,t_0,t_1\}$, $t_0,t_1 \in R$ where $u_t(s) \equiv u(t+s)$, $s \in [-h,0]$.

<u>Definition 2.3.</u> Given $U \subset R^m$ and bounded measurable functions $v_i: [-h,0] \to U$, $i = 0,1$, we denote by $\mathcal{S}_h^3(A,B_0,B_1)$ the system $\mathcal{S}_h(A,B_0,B_1)$ subject to constraints

$$u(t) \in U, \qquad t \in [t_0,t_1-h]$$
$$u_{t_0} = v_0, \quad u_{t_1} = v_1$$

on the controls $\{u,t_0,t_1\}$, $t_0,t_1 \in R$.

In the problems considered in this paper we shall often take $U = R^m$ or $U = K^m$, where K^m is the <u>unit cube</u>, $\{u = (u^1,\ldots,u^m) \in R^m \mid |u^i| \leq 1, i = 1,\ldots,m\}$, in R^m. Whenever, h, A, B_0, B_1 are understood $\mathcal{S}^i$ will be used instead of $\mathcal{S}_h^i(A,B_0,B_1)$, $i = 1,2,3$.

Systems of type $\mathcal{S}^2$ with $v_0 = 0$ are models for physical problems where at initial time t_0 there is no delayed control effect, but after some time $t_0 + h$ there enters a non-negligible effect on the system at time t by the control given previously at time $t - h$. This is exactly the case which occurs in the study of lossless transmission lines when one reduces a linear hyperbolic partial differential equation system with boundary controls to a linear differential-difference equation of neutral type in which control terms $u(t)$, $u(t-h)$ also appear linearly [14].

Day and Hsia [7] have recently proposed a modification involving delayed controls for a model [18] of a gas-pressurized bipropellent rocket engine. In addition to being of type $\mathcal{S}^2$, this modified model also provides motivation for study of systems in which the kernel of B_0 and the kernel of B_1 are complementary subspaces. $\mathcal{S}^2$-type systems are also models for continuous stirred tank reactors as studied by Ray and Soliman [24]. Although the example studied in [24] is non-linear, linearization about a nominal yields a system which satisfies kernel $(B_0) \subset$ kernel(B_1) (see section 4 below).

Problems with systems of type $\mathcal{S}^3$ with $v_0 = v_1 = 0$ are motivated by air traffic control models currently under study [26]; one such model has system equations $\dot{x}(t) = -\ell(t,x(t)) + u(t-h)$, $\dot{y}(t) = q(t) - u(t)$, where ℓ is a landing rate, q is a queing or scheduling rate, and u is a takeoff rate. These models also involve systems in which kernel B_0 and kernel B_1 are complementary subspaces. Systems of type $\mathcal{S}^3$ with $v_1 = 0$ are of importance in

so-called "settling problems"; i.e., problems in which one desires to attain the equilibrium state $x(t_1) = 0$ in such a way that the system will remain at this state without further control if other disturbances are absent.

We note that all three types of systems defined above are quite different from systems such as those modeling remote earth control of deep-space satellites studied by Foerster [9] and others [10, 12, 23] which contain only control terms with a delay (i.e., $B_0 = 0$).

A control $\{u, t_0, t_1\}$ will be called <u>admissible</u> for the system $\mathcal{S}_h^i(A, B_0, B_1)$ (or simply <u>$\mathcal{S}^i$-admissible</u>) if $u: [t_0-h, t_1] \to R^m$ is bounded, measurable and satisfies the constraints detailed in the definition of $\mathcal{S}^i$, $i = 1,2,3$. Given $x_0, x_1 \in R^n$ and $t_0 \in R$, we shall denote by P_i, $i = 1,2,3$, the problem of finding an $\mathcal{S}^i$-admissible triple $\{\bar{u}, t_0, \bar{t}\}$ with $U = K^m$ satisfying $x(\bar{t}; t_0, x_0, \bar{u}) = x_1$ and $\bar{t} = \min \{t_1 | \{u, t_0, t_1\}$ is $\mathcal{S}^i$-admissible with $x(t_1; t_0, x_0, u) = x_1\}$, where $x(\cdot; t_0, x_0, u)$ is the response (solution) of system $\mathcal{S}_h(A, B_0, B_1)$ to control u with $x(t_0; t_0, x_0, u) = x_0$. That is, P_1 denotes the time optimal problem from x_0 to x_1 for the system $\mathcal{S}_h^1(A, B_0, B_1)$ with $U = K^m$. The special case of problem P_3 with $v_0 = v_1 = 0$ will be denoted by P_3^0. Finally, we shall denote by P the special time optimal problem as studied in [11]; i.e., the minimum time to origin for the system $\mathcal{S}(A, B)$ with $U = K^m$.

Necessary conditions in the form of a maximum principle for the problem P_1 are a special case of the general necessary conditions

derived previously by the authors [2]. Using similar proofs one can derive necessary conditions for the problems P_2 and $P_3(P_3^o)$. Use of these conditions yields that an optimal control $\{\bar{u}, t_0, \bar{t}\}$ for problem P_1 must satisfy

$$(2.1a) \qquad \bar{u}(t) = \begin{cases} \operatorname{sgn}[\psi(t+h)B_1], & t \in [t_0-h, \bar{t}-h] \\ \text{arbitrary}, & t \in (\bar{t}-h, t_0) \\ \operatorname{sgn}[\psi(t)B_0], & t \in [t_0, \bar{t}], \end{cases}$$

if $0 \leq \bar{t} - t_0 < h$, and if $h \leq \bar{t} - t_0$, then $\{\bar{u}, t_0, \bar{t}\}$ must satisfy

$$(2.1b) \qquad \bar{u}(t) = \begin{cases} \operatorname{sgn}[\psi(t+h)B_1], & t \in [t_0-h, t_0) \\ \operatorname{sgn}[\psi(t)B_0 + \psi(t+h)B_1], & t \in [t_0, \bar{t}-h) \\ \operatorname{sgn}[\psi(t)B_0], & t \in [\bar{t}-h, \bar{t}], \end{cases}$$

where $\psi(t) = \eta \exp(\bar{t}-t)A$, and the vector $\eta \neq 0$ is an outward normal to a support hyperplane for the attainable set at time $\bar{t}$ passing through the boundary point x_1. It is understood that when $a, b \in R^m$, the relation "a = sgn b" is to be interpreted using the same convention as in [11, pg. 50]. For the problem P_2 one obtains

the corresponding necessary conditions from (2.1a) and (2.1b) by deleting the requirements in the first two lines on the right-hand side of (2.1a), and the condition on the interval $[t_0-h,t_0)$ in (2.1b). For problem (P_3) one always has $\bar{t} \geq h$ so that the situation in (2.1a) never occurs. Thus the necessary conditions for problem P_3 are obtained from (2.1b) by deleting the requirements on the intervals $[t_0-h,t_0)$ and $[\bar{t}-h,\bar{t}]$.

Any admissible control in problem P_i satisfying the above necessary conditions for P_i will be called an <u>extremal control</u> for problem P_i, $i = 1,2,3$. Evidently, when computing extremal responses (i.e., responses to extremal controls) what one uses is what might be termed an extremal "effective control", i.e., $\bar{v}(t) = B_0\bar{u}(t) + B_1\bar{u}(t-h)$, $t \in [t_0,\bar{t}]$ where $\{\bar{u},t_0,\bar{t}\}$ is an extremal control. This $\bar{v}$ is easily computed from (2.1a) and (2.1b) or their appropriate modifications for problems P_2,P_3.

3. Controllability

In this section we shall derive necessary and sufficient conditions for controllability of the systems $\mathscr{S}^i$ as defined above. These conditions will be analogous to the well-known rank condition on the controllability matrix for systems $\mathscr{S}(A,B)$.

Definition 3.1. The system $\mathscr{S}^i_h(A,B_0,B_1)$, $i = 1,2,3$, is controllable on $[t_0,t_1]$ if for every $x_0,x_1 \in R^n$ there is an $\mathscr{S}^i$-admissible triple $\{u,t_0,t_1\}$ such that $x(t_1; t_0,x_0,u) = x_1$.

Remark 3.1. We shall find that the necessary and sufficient conditions for controllability are actually independent of the interval $[t_0,t_1]$ as long as $t_1 > t_0 + h$. Hence one could define the equivalent concept of a "controllable system" in addition to a "controllable on $[t_0,t_1]$ system". For the systems $\mathscr{S}(A,B)$ it is well-known that these concepts (and others) are equivalent [11,19]. Since we are mainly interested in obtaining the form of the necessary and sufficient conditions, we shall not pursue that aspect of the development here.

Let us denote by $\mathscr{C}: \mathscr{L}_{nn} \times \mathscr{L}_{nr} \to \mathscr{L}_{n(nr)}$ the usual controllability matrix $\mathscr{C}(A,B) = [B,AB,\ldots,A^{n-1}B]$.

Theorem 3.1. A necessary condition that $\mathscr{S}^i_h(A,B_0,B_1)$, $i = 1,2,3$ be controllable on any $[t_0,t_1]$ with $t_1 > t_0 + h$ is that $[\mathscr{C}(A,B_0),\ \mathscr{C}(A,B_1)]$ have rank n.

<u>Proof</u>: $\mathscr{S}_h^1(A,B_0,B_1)$ controllable $\Rightarrow \mathscr{S}(A,(B_0,B_1))$ controllable $\Rightarrow$ $\mathscr{C}(A,(B_0,B_1))$ has rank $n \Rightarrow [\mathscr{C}(A,B_0),\ \mathscr{C}(A,B_1)]$ has rank n.

The above condition will be shown sufficient for systems $\mathscr{S}^1$ and $\mathscr{S}^2$ whenever $U = R^m$, but a much stronger condition will be necessary and sufficient for systems $\mathscr{S}^3$. Note that the condition does <u>not</u> depend on h, the lag size.

<u>Theorem 3.2</u>. Let $U = R^m$. A sufficient condition that $\mathscr{S}_h^1(A,B_0,B_1)$ and $\mathscr{S}_h^2(A,B_0,B_1)$ be controllable on every $[t_0,t_1]$ with $t_1 > t_0 + h$ is that $[\mathscr{C}(A,B_0),\ \mathscr{C}(A,B_1)]$ have rank n.

<u>Proof</u>: It suffices to give the proof for the system $\mathscr{S}_h^2(A,B_0,B_1)$. We shall give a proof that is a slight modification of that given for the systems $\mathscr{S}(A,B)$ in [19]. The usual constructive proof (see [13]) using a special symmetric matrix can also be made. Assume that $[\mathscr{C}(A,B_0),\ \mathscr{C}(A,B_1)]$ has rank n. Let $[t_0,t_1]$ with $t_1 > t_0 + h$ and v_0 be given for $\mathscr{S}_h^2(A,B_0,B_1)$. Define $x_0(v_0) =$ $-e^{-(t_1-t_0)A}\int_{t_0-h}^{t_0} e^{(t_1-t-h)A} B_1 v_0(t-t_0)dt$ and consider $\mathscr{A}^M(x_0(v_0))$, the attainable set at time t_1 for the system $\mathscr{S}_h^2(A,B_0,B_1)$ with $x(t_0) = x_0(v_0)$ and $U = \{u \in R^m \mid |u^i| \leq M,\ i = 1,\ldots,m\}$. The set $\mathscr{A}^M(x_0(v_0))$ consists of all points z of the form $z =$ $\int_{t_0}^{t_1-h} e^{(t_1-t-h)A} B_1 u(t)dt + \int_{t_0}^{t_1} e^{(t_1-t)A} B_0 u(t)dt$ where $u\colon [t_0,t_1] \to R^m$

is bounded measurable with $|u^1(t)| \leq M$. We claim that $\mathscr{A}^M(x_0(v_0)) \subset R^n$ has dimension n. If not, there is a vector $\lambda \neq 0$ such that $\lambda z = 0$ for all $z \in \mathscr{A}^M(x_0(v_0))$, or

$$(3.1) \qquad \lambda \int_{t_0}^{t_1-h} e^{(t_1-t-h)A} B_1 u(t)dt + \lambda \int_{t_0}^{t_1} e^{(t_1-t)A} B_0 u(t)dt = 0$$

for all bounded measurable u with $|u^1(t)| \leq M$. Taking $u = 0$ on $[t_0, t_1-h]$ in (3.1) yields $\lambda e^{(t_1-t)A} B_0 = 0$ for $t \in [t_1-h, t_1]$. It follows by the usual arguments that $\lambda A^k B_0 = 0$ for $k = 0,1,2,\ldots$; thus $\lambda \mathscr{C}(A,B_0) = 0$ and $\lambda e^{\xi A} B_0 = 0$ for $\xi \in R$. Use of this latter result with (3.1) yields $\lambda e^{(t_1-t-h)A} B_1 = 0$ for $t \in [t_0, t_1-h]$. It then follows that $\lambda[\mathscr{C}(A,B_0), \mathscr{C}(A,B_1)] = 0$, contradicting the rank condition hypothesized above.

That the n-dimensional set $\mathscr{A}^M(x_0(v_0))$ is compact and convex in R^n follows from previous results by the authors [2]. Furthermore, it is easily seen that $\mathscr{A}^M(x_0(v_0))$ is symmetric about the origin in R^n and hence must contain a neighborhood of the origin. Since $2\mathscr{A}^M(x_0(v_0)) \subset \mathscr{A}^{2M}(x_0(v_0))$ we find that the attainable set $\mathscr{A}(x_0(v_0))$ at time t_1 for $\mathscr{S}^2$ with $U = R^m$ and $x(t_0) = x_0(v_0)$ must be all of R^n. The conclusion of the theorem then follows from the fact that

$$\mathscr{A}(x_0) = e^{(t_1-t_0)A}\{x_0 - x_0(v_0)\} + \mathscr{A}(x_0(v_0))$$

for any $x_0 \in R^n$.

We remark that an obvious modification of the above proof will show that the condition of the theorem is also sufficient for controllability of systems of type $\mathcal{S}_h^2(A,B_0,B_1)$ where one has a boundary condition $u_{t_1} = v_1$ in place of $u_{t_0} = v_0$. As one would expect, if U is a proper subset of R^m, then the condition of Theorem 3.2 is no longer sufficient for controllability (see examples 7.3, 7.4 below). An immediate consequence of Theorem 3.2 is that systems $Lx = b_0u(t) + b_1u(t-h)$ will always give rise to $\mathcal{S}^1$ and $\mathcal{S}^2$ type systems which are controllable. Here L denotes the usual real scalar n^{th} order differential operator with constant coefficients, $Lx = x^{(n)} + a_{n-1}x^{(n-1)} + \cdots + a_0x$.

<u>Remark 3.2.</u> In a recent note [5] D. H. Chyung considered the controllability question for systems of type $\mathcal{S}^2$. He obtained as necessary and sufficient for controllability the condition that $[\mathcal{C}(A,B_0),\ \mathcal{C}(A,e^{-hA}B_1)]$ be of rank n. Note that from this condition one might suspect that lag size h could affect controllability. However, it is not difficult to show that $[\mathcal{C}(A,B_0),\ \mathcal{C}(A,e^{-hA}B_1)]$ has rank n if and only if $[\mathcal{C}(A,B_0),\ \mathcal{C}(A,B_1)]$ has rank n. From a practical point of view, use of the second matrix is more desirable since it can be computed without computing e^{-hA}.

In practice when delays are small in a problem one sometimes chooses to ignore them and work with an approximate system obtained by setting $h = 0$ in the original system. For $i = 1,2$, the system $\mathcal{S}_h^i(A,B_0,B_1)$ is thus approximated by the system $\mathcal{S}(A,B_0+B_1)$. In connection with this approximation we make the following observation.

<u>Theorem 3.3.</u> For $i = 1,2$, $\mathcal{S}(A,B_0+B_1)$ controllable implies $\mathcal{S}_h^i(A,B_0,B_1)$ controllable when $U = R^m$.

<u>Proof:</u> $\mathcal{S}(A,B_0+B_1)$ controllable $\Rightarrow$ $\mathcal{C}(A,B_0+B_1)$ has rank n $\Rightarrow$ $[B_0+B_1, A(B_0+B_1), \ldots, A^{n-1}(B_0+B_1), -B_0, -AB_0, \ldots, -A^{n-1}B_0]$ has rank n $\Rightarrow$ $[\mathcal{C}(A,B_0), \mathcal{C}(A,B_1)]$ has rank n.

It is easy to give an example to show that the converse of Theorem 3.3 is not true, e.g., take $B_1 = -B_0$. Indeed, even in situations where the approximation might seem more reasonable, controllability can still be lost by use of the approximation.

<u>Example 3.1.</u> Consider the system

$$\dot{x}(t) = fy(t) + au(t) + bu(t-h)$$
$$\dot{y}(t) = gx(t) + cu(t-h)$$

where a,b,c,f,g,h are not zero. One finds that

$[\mathscr{C}(A,B_0),\ \mathscr{C}(A,B_1)]$ has rank 2 while $\det \mathscr{C}(A,B_0+B_1) = g(a+b)^2 - fc^2$. Thus by using the approximation one destroys controllability if $(a+b)^2 = fc^2/g$. For example, if $a = 1$, $b = -\varepsilon$ and $c = (g/f)^{1/2}(1-\varepsilon)$ where $g/f > 0$, one would probably not wish to ignore the lag h.

We remark that the results of this section can be extended to systems with multiple delays and even to systems with certain types of time variable delays. For example, for systems with dynamics given by

$$(3.2) \qquad \dot{x}(t) = Ax(t) + \sum_{i=0}^{\nu} B_i u(t-h_i) \qquad t \in [t_0,t_1]$$

with $0 = h_0 < h_1 < \cdots < h_\nu$ and $u(t) \in U$, $t \in [t_0-h_\nu,t_1]$, one can modify the previous proof to obtain the following theorem.

<u>Theorem 3.4.</u> Let $U = R^m$. A necessary and sufficient condition that (3.2) be controllable on any $[t_0,t_1]$ with $t_1 > t_0 + h_\nu$ is that $[\mathscr{C}(A,B_0),\ \mathscr{C}(A,B_1),\ldots,\mathscr{C}(A,B_\nu)]$ have rank n.

As a corollary to this theorem we obtain a sufficient condition for controllability which does not involve A.

<u>Corollary 3.1.</u> For the system (3.2) with $U = R^m$ and $(\nu+1)m \geq n$, a sufficient condition for controllability on any $[t_0,t_1]$ with $t_1 > t_0 + h_\nu$ is that $[B_0,B_1,\ldots,B_\nu]$ have rank n.

Once one has obtained necessary and sufficient conditions for controllability of systems $\mathscr{S}_h^1(A,B_0,B_1)$ and $\mathscr{S}_h^2(A,B_0,B_1)$ in terms of a rank condition on a "controllability matrix", one should be able to prove many theorems for these systems analogous to those for the system $\mathscr{S}(A,B)$ which involve the usual controllability matrix. We shall present one such result involving the domain of null controllability, the proof being developed in a manner similar to one in [19].

We define the domain of null controllability for $\mathscr{S}_h^1(A,B_0,B_1)$ by

$$\mathscr{D}_0^1 \equiv \left\{ x_0 \in R^n \,\middle|\, \begin{array}{l} \text{there exists an } \mathscr{S}^1\text{-admissible triple} \\ \{u,t_0,t_1\} \text{ with } x(t_1;\, t_0,x_0,u) = 0 \end{array} \right\}.$$

In a similar manner we define for $\mathscr{S}_h^2(A,B_0,B_1)$ the set

$$\mathscr{D}_0^2(v_0) \equiv \left\{ x_0 \in R^n \,\middle|\, \begin{array}{l} \text{there exists an } \mathscr{S}^2\text{-admissible triple} \\ \{u,t_0,t_1\} \text{ with } u_{t_0} = v_0 \text{ such that} \\ x(t_1;\, t_0,x_0,u) = 0 \end{array} \right\}.$$

Note that for a given U, $\mathscr{D}_0^2(v_0) \subset \mathscr{D}_0^1$ for any v_0. We shall be especially interested in the set $\mathscr{D}_0^2(0)$, i.e., $v_0 \equiv 0$.

<u>Lemma 3.1.</u> Suppose $0 \in U \subset R^m$ and A is asymptotically stable. If $\mathscr{D}_0^2(0)$ contains a neighborhood $\mathscr{N}$ of the origin in R^n, then $\mathscr{D}_0^2(0) = R^n$.

<u>Proof:</u> Given $x_0 \in R^n$, let $\tau > 0$ be such that $x(\tau;\ 0,x_0,0) = e^{\tau A}x_0$ is in $\mathscr{N} \subset \mathscr{D}_0^2(0)$. Then let $\{\tilde{u},t_0,t_1\}$ be $\mathscr{S}^2$-admissible with $\tilde{u}_{t_0} = 0$ such that $x(t_1;\ t_0,e^{\tau A}x_0,\tilde{u}) = 0$. Defining

$$\hat{u}(\xi) = \begin{cases} 0 & \xi \in [-h,\tau] \\ \tilde{u}(\xi-\tau+t_0) & \xi \in (\tau,\tau+t_1-t_0], \end{cases}$$

it is easy to show that $x(\tau+t_1-t_0;\ 0,x_0,\hat{u}) = 0$ which implies $x_0 \in \mathscr{D}_0^2(0)$.

<u>Lemma 3.2.</u> Suppose $0 \in \operatorname{int} U$ and $[\mathscr{C}(A,B_0),\ \mathscr{C}(A,B_1)]$ has rank n. Then $\mathscr{D}_0^2(0)$ contains a neighborhood of the origin in R^n.

<u>Proof:</u> Let $\mathscr{A}_{t_1}^-(y_0)$ denote the attainable set at time t_1 corresponding to $y(0) = y_0$ using the system

$$\begin{cases} \dot{y}(t) = -Ay(t) - B_1w(t) - B_0w(t-h) & t \in [0,t_1] \\ w_{t_1} = 0, \quad w(t) \in U, & t \in [-h,t_1]. \end{cases}$$

This system may be thought of as the system "$\mathscr{S}_h^2(A,B_0,B_1)$ with $v_0 \equiv 0$" run in reverse time. Since rank $[\mathscr{C}(-A,-B_1), \mathscr{C}(-A,-B_0)]$ = rank $[\mathscr{C}(A,B_0), \mathscr{C}(A,B_1)]$, arguments similar to those in the proof of Theorem 3.2 may be used to show that $\mathscr{A}_{t_1}^-(0)$ contains a neighborhood of the origin in R^n for $t_1 > h$ whenever $0 \in \text{int } U$. It remains only to show $\mathscr{A}_{t_1}^-(0) \subset \mathscr{D}_0^2(0)$ for $t_1 > h$. Since $x_1 \in \mathscr{A}_{t_1}^-(0)$ is of the form

$$x_1 = \int_0^{t_1} e^{(t_1-s)(-A)} [-B_1 w(s) - B_0 w(s-h)]ds$$

where $w_{t_1} = 0$, one can easily obtain

$$0 = e^{t_1 A} x_1 + \int_0^{t_1} e^{(t_1-t)A} [B_0 u(t) + B_1 u(t-h)]dt$$

with $u(t) \equiv w(t_1-h-t)$ for $t \in [-h,t_1]$, yielding that $x_1 \in \mathscr{D}_0^2(0)$.

Combining the two lemmas one obtains the following results.

<u>Theorem 3.5.</u> Suppose A is asymptotically stable, $0 \in \text{int } U$, and $[\mathscr{C}(A,B_0), \mathscr{C}(A,B_1)]$ has rank n. Then $\mathscr{D}_0^2(0)$ (and hence $\mathscr{D}_0^1$) is all of R^n.

Obvious modifications of the above arguments yield the following corollary.

Corollary 3.2. Under the hypotheses of Theorem 3.5, we have $\mathscr{D}_0^2(v_0) = R^n$ for any v_0.

Remark 3.3. One can obtain a result similar to Theorem 3.5 for the systems $\mathscr{S}_h^2(A,B_0,B_1)$ with the condition $u_{t_0} = v_0$ replaced by $u_{t_1} = v_1$. However, the rank condition of the hypotheses must be replaced by the, in general, stronger condition "$\mathscr{C}(A, e^{-hA}B_1+B_0)$ has rank n". The reason for this change will be apparent after our discussion on the controllability of systems of type $\mathscr{S}_h^3(A,B_0,B_1)$ which follows.

Although controllability conditions for systems $\mathscr{S}_h^3(A,B_0,B_1)$ can be derived from basic principles as was done above for systems $\mathscr{S}^1$ and $\mathscr{S}^2$, we shall make a simple observation about systems of type $\mathscr{S}^3$ which will yield the same results immediately by applying known theorems [11, 19] for certain non-delayed systems. For $\mathscr{S}_h^3(A,B_0,B_1)$ on $[t_0,t_1]$ and v_0,v_1 given, a straightforward calculation shows that the response $x(\cdot;\ t_0,x_0,u)$ to $\mathscr{S}_h^3(A,B_0,B_1)$ satisfies

$$x(t_1;\ t_0,x_0,u) = \hat{x}(t_1-h;\ t_0,\tilde{x}_0,u)$$

where $\hat{x}$ is the solution to system $\mathscr{S}(A, e^{hA}B_0+B_1)$ on $[t_0,t_1-h]$ subject to $\hat{x}(t_0) = \tilde{x}_0 \equiv e^{hA}x_0 + e^{-(t_1-h-t_0)A}\Delta$ with $\Delta = \Delta(v_0,v_1,t_0,t_1)$

defined by

$$\Delta(v_0,v_1,t_0,t_1) \equiv \int_{t_0-h}^{t_0} e^{(t_1-t-h)A} B_1 v_0(t-t_0)dt$$

$$+ \int_{t_1-h}^{t_1} e^{(t_1-t)A} B_0 v_1(t-t_1)dt.$$

Therefore, it is not difficult to verify that $\mathcal{S}_h^3(A,B_0,B_1)$ is controllable on $[t_0,t_1]$ if and only if $\mathcal{S}(A,e^{hA}B_0+B_1)$ is controllable on $[t_0,t_1-h]$. It follows that studying controllability of systems $\mathcal{S}_h^3(A,B_0,B_1)$ is equivalent to studying that of systems $\mathcal{S}(A,e^{hA}B_0+B_1)$. Since the matrix $\mathcal{C}(A,e^{hA}B_0+B_1)$ is rank equivalent to $\mathcal{C}(A,B_0+e^{-hA}B_1)$, we have the following theorems.

<u>Theorem 3.6.</u> A necessary condition that $\mathcal{S}_h^3(A,B_0,B_1)$ be controllable on any $[t_0,t_1]$ with $t_1 > t_0 + h$ is that $\mathcal{C}(A,B_0+e^{-hA}B_1)$ have rank n.

<u>Theorem 3.7.</u> Let $U = R^m$. A sufficient condition that $\mathcal{S}_h^3(A,B_0,B_1)$ be controllable on any $[t_0,t_1]$ with $t_1 > t_0 + h$ is that $\mathcal{C}(A,B_0+e^{-hA}B_1)$ have rank n.

<u>Remark 3.4.</u> The rank of $\mathcal{C}(A,B_0+e^{-hA}B_1)$ equals n implies the rank of $[\mathcal{C}(A,B_0), \mathcal{C}(A,B_1)]$ is n, but not conversely (see Example 3.2 below). Thus the rank condition of Theorems 3.6 and 3.7

is, in general, stronger than that of Theorem 3.1. Furthermore, the dependence of the rank condition here on the lag size h is not illusory (see Remark 3.2) as the following example demonstrates.

<u>Example 3.2.</u> Consider the system

$$\dot{x}(t) = \pi y(t)$$
$$\dot{y}(t) = -\pi x(t) + u(t) + u(t-h).$$

For $h = 1$ we find $\mathscr{C}(A, B_0 + e^{-hA}B_1) = 0$ while for $h = 2$ $\mathscr{C}(A, B_0 + e^{-hA}B_1) = \begin{bmatrix} 0 & 2\pi \\ 2 & 0 \end{bmatrix}$. In addition, $[\mathscr{C}(A,B_0), \mathscr{C}(A,B_1)]$ has rank 2.

The above example also shows that the systems $Lx = b_0 u(t) + b_1 u(t-h)$, $u_{t_0} = v_0$, $u_{t_1} = v_1$, need not be controllable (see the comments preceding Remark 3.2). It is also easy to see that controllability of $\mathscr{S}_h^3(A, B_0, B_1)$ is not, in general, implied by controllability of either $\mathscr{S}(A, B_0)$ or $\mathscr{S}(A, B_1)$.

That a result on approximation similar to Theorem 3.3 does not hold for $\mathscr{S}^3$ type systems can be seen from Example 3.2 above. Finally, defining the domain of null controllability $\mathscr{D}_0^3(v_0, v_1)$ for $\mathscr{S}_h^3(A, B_0, B_1)$ in the obvious way, we do obtain the following analogue to Theorem 3.5.

<u>Theorem 3.8</u>. Suppose A is asymptotically stable, $0 \in \operatorname{int} U$, and $\mathscr{L}(A, B_0 + e^{-hA} B_1)$ has rank n. Then, $\mathscr{D}_0^3(v_0, v_1) = R^n$ for any v_0, v_1.

4. Sufficient Conditions for the Special Time Optimal Control Problem

In this section we prove sufficient conditions for problems of the form P_1, P_2, or P_3^o where $U \equiv K^m$, the "unit cube" in R^m (see section 2) and the terminal condition $x(t_1; t_0, x_0, u) = 0$. Actually, in sections 4 through 7 we always take $t_0 = 0$ so t_0 will be suppressed in the notation $x(t; t_0, x_0, u)$ and in the notation $\{u, t_0, t_1\}$ for an admissible triple. The sufficiency condition in this section is an extension of a sufficient condition given by Hermes and LaSalle [11, pg. 72]. The discussion is facilitated by introducing the concept of the <u>set of reachable states</u> at time t [11] for problems P, P_1, P_2, and P_3^o. We say that a point (or state) $x \in R^n$ is <u>reachable at time $t \geq 0$ in problem P</u> if there is an admissible u for problem P such that

$$(4.1) \qquad x = \int_0^t e^{-As} Bu(s)ds.$$

We say that x is <u>reachable at time $t \geq 0$ in problem</u> P_1, P_2, P_3^o if there is an admissible $\{u, t\}$ for problem P_1, P_2, P_3^o respectively such that

$$(4.2) \qquad x = \int_0^t e^{-As}[B_0 u(s) + B_1 u(s-h)]ds.$$

The symbols $\mathscr{R}(t)$, $\mathscr{R}_1(t)$, $\mathscr{R}_2(t)$, $\mathscr{R}_3^o(t)$ denote respectively the set of all states x reachable at time t in problems P, P_1, P_2, P_3^o. Properties of $\mathscr{R}(t)$ have been carefully studied in [11]. The

behavior of $\mathscr{R}_1(t)$ and $\mathscr{R}_2(t)$ is somewhat more complicated. In fact, we shall see that some of the basic properties of $\mathscr{R}(t)$ simply are not true for $\mathscr{R}_1(t)$ and $\mathscr{R}_2(t)$ without making special assumptions on B_0 and B_1.

If $x,y \in R^p$, then we use $\langle x,y\rangle$ to denote the usual scalar product in R^p. If $S \subset R^p$, then $S^\perp$ denotes the orthogonal complement of S, i.e., $S^\perp \equiv \{x \in R^p \mid \langle x,y\rangle = 0,\ y \in S\}$. If M is a $p \times q$ real matrix, i.e., $M \in \mathcal{L}_{pq}$, then we reserve $\ker(M)$ and $\mathrm{Im}(M)$ for the kernel and image respectively of the linear transformation $x \mapsto xM$, $x \in R^p$, i.e., $\ker(M) = \{x \in R^p \mid xM = 0\}$ and $\mathrm{Im}(M) = \{y \in R^q \mid y = xM \text{ for some } x \in R^p\}$. The following norms will be used for vectors $x = (x^1,\ldots,x^p) \in R^p$:

$$\|x\|_\infty \equiv \max\{|x^i|,\ i = 1,\ldots,p\}$$

$$\|x\| \equiv \sqrt{\langle x,x\rangle}$$

$$|x| \equiv \sum_{i=1}^{p} |x^i|.$$

We also use the symbol $\|M\|_\infty$ to denote the matrix norm subordinate to the vector norm $\|\cdot\|_\infty$ on R^p and R^q, i.e.,

$$\|M\|_\infty \equiv \max\{\|xM\|_\infty \mid \|x\|_\infty \leq 1,\ x \in R^p\}$$

$$= \max\{\sum_{i=1}^{p} |m_{ij}| \mid j = 1,\ldots,q\},$$

where $M = (m_{ij})$, $i = 1,\ldots,p$; $j = 1,\ldots,q$. The matrix norm $|M|$ subordinate to the vector norm $|\cdot|$ is similarly defined and is likewise easy to compute.

Some hypotheses which will be invoked to obtain various results in the sequel are now listed for future reference.

(H1) Matrix B_0 has a left inverse B_{0L}^{-1} and $C \equiv B_{0L}^{-1}B_1$ satisfies $\|C\|_\infty \leq 1$.

(H2) Hypothesis (H1) with $|C| < 1$ instead of $\|C\|_\infty \leq 1$.

(H3) For any t_1, t_2 satisfying $0 < t_1 < t_2$

$$\int_{t_1}^{t_2} |\eta e^{-As} B_0| \, ds > \int_{t_1}^{t_2} |\eta e^{-As} B_1| \, ds$$

whenever $\eta \in R^n$ and $\eta \neq 0$.

(H4) $|xB_0| > |xB_1|$, $x \in [\ker (B_0)]^\perp = \operatorname{Im} [B_0^*]$, $x \neq 0$.

(H4') $|xB_0| \geq |xB_1|$, $x \in R^n$.

<u>Proposition 4.1.</u> There is an $m \times m$ real matrix G such that $B_1 = B_0 G$ if and only if $\ker (B_0) \subset \ker (B_1)$.

<u>Proof:</u> Evidently, $B_1 = B_0 G$ implies $\ker (B_0) \subset \ker (B_1)$. Conversely,

$\ker(B_0) \subset \ker(B_1)$ implies $[\ker(B_0)]^{\perp} \supset [\ker(B_1)]^{\perp}$ or equivalently, $\mathrm{Im}(B_0^*) \supset \mathrm{Im}(B_1^*)$. The existence of G with the required properties follows at once from the last inclusion and some elementary matrix operations.

<u>Proposition 4.2.</u> (a) (H4') implies $\ker(B_0) \subset \ker(B_1)$.

(b) (H4) and $\ker(B_0) \subset \ker(B_1)$ imply (H4').

(c) If $\mathcal{S}(A,B_0)$ is proper[1], $\ker(B_0) \subset \ker(B_1)$, and (H4) is satisfied, then (H3) is satisfied.

(d) If (H3) is satisfied, then $\mathcal{S}(A,B_0)$ is proper, and (H4') is satisfied.

(e) (H4') and (H2) imply (H4).

<u>Proof:</u> Statements (a) and (b) are obvious. Suppose (H3) is satisfied. Then for $\delta > 0$, $\eta \in R^n$, $\eta \neq 0$ we have

$$\frac{1}{\delta}\int_{t_1}^{t_1+\delta} |\eta e^{-As}B_0|\,ds > \frac{1}{\delta}\int_{t_1}^{t_1+\delta} |\eta e^{-As}B_1|\,ds, \quad t_1 > 0.$$

Hence there results

$$|\eta e^{-As}B_0| \geq |\eta e^{-As}B_1|, \quad \eta \in R^n, \quad s \geq 0$$

and (H4') is satisfied. Evidently (H3) implies $\mathcal{S}(A,B_0)$ is proper.

---

[1] See [11] for the definition of a proper system $\mathcal{S}(A,B_0)$.

Now assume (H4), ker $(B_0) \subset$ ker (B_1), and $\mathscr{S}(A,B_0)$ is proper. Observe that

$$R^n = \ker (B_0) \oplus [\ker (B_0)]^{\perp} = \ker (B_0) \oplus \operatorname{Im} (B_0^*).$$

Choose $\eta \neq 0$, $\eta \in R^n$ and define $\psi(t) = \eta e^{-At}$. Then $\psi(t) = \nu(t) + \mu(t)$, where $\nu(t) \in \ker (B_0)$ and $\mu(t) \in \operatorname{Im} (B_0^*)$. This decomposition is unique and μ and ν are continuous. Choose $0 < t_1 < t_2$, then (H4) implies

$$|\mu(t)B_0| > |\mu(t)B_1|$$

on $[t_1,t_2]$ with the possible exception of a finite number of points since $\mathscr{S}(A,B_0)$ is proper. The assumptions ker $(B_0) \subset$ ker (B_1) implies

$$|\psi(t)B_0| > |\psi(t)B_1| \qquad \text{a.e. on } [t_1,t_2]$$

and (H3) follows at once.

Suppose now that (H4') and (H2) are satisfied. Then $B_1 = B_0C$ by Proposition 4.1. If $x \in [\ker B_0]^{\perp}$, $x \neq 0$, then $|xB_0| > 0$. Whence $|xB_1| = |xB_0C| \leq |xB_0|\ |C| < |xB_0|$, and (H4) is satisfied.

<u>Corollary 4.1.</u> If $\mathscr{S}(A,B_0)$ is proper, ker $(B_0) \subset$ ker (B_1), and (H4) is satisfied, then $|\eta e^{-At}B_0| > |\eta e^{-At}B_1|$, $\eta \neq 0$, $\eta \in R^n$ for all but a finite number of t on any compact interval.

Example 4.1. Let L denote the linear differential operator

$$Lx = x^{(n)} + a_{n-1}x^{(n-1)} + \cdots + a_0 x$$

where a_i, $i = 0,\ldots,n-1$ are real constants. Consider the control system $Lx = b_0 u(t) + b_1 u(t-h)$ where b_0, b_1 are real constants. Since we refer to this example several times in the sequel we write this explicitly in the form $\mathscr{S}_h(A,B_0,B_1)$. Let

$$B_0 = \begin{pmatrix} 0 \\ \vdots \\ 0 \\ b_0 \end{pmatrix}, \qquad B_1 = \begin{pmatrix} 0 \\ \vdots \\ 0 \\ b_1 \end{pmatrix}$$

$$A = \begin{pmatrix} 0 & 1 & 0 & \cdots & 0 \\ 0 & 0 & 1 & \cdots & 0 \\ \cdot & \cdot & \cdot & \cdots & \cdot \\ 0 & 0 & 0 & \cdots & 1 \\ -a_0 & -a_1 & -a_2 & \cdots & -a_{n-1} \end{pmatrix}.$$

Then $Lx = b_0 u(t) + b_1 u(t-h)$ is equivalent to the system $\mathscr{S}_h(A,B_0,B_1)$. The condition that matrix B_0 have a left inverse is equivalent to $b_0 \neq 0$. Hypothesis (H1) is satisfied if $b_0 \neq 0$ and $\left|\frac{b_1}{b_0}\right| \leq 1$. Clearly $\ker(B_0) \subset \ker(B_1)$. Moreover, $b_0 \neq 0$ implies $\mathscr{S}(A,B_0)$ is proper. Finally (H4) is satisfied if $|b_0| > |b_1|$.

Let $\Gamma(t)$ denote any one of the reachable sets at time t (i.e., $\mathscr{R}(t)$, $\mathscr{R}_1(t)$, $\mathscr{R}_2(t)$, $\mathscr{R}_3^0(t)$). Then $\Gamma(t)$ is <u>increasing</u> if $0 \leq t_1 \leq t_2$ implies $\Gamma(t_1) \subset \Gamma(t_2)$. We say $\Gamma(t)$ is <u>expanding</u> if

$\Gamma(t) \subset \text{Int}\,(\Gamma(t_1))$ for $0 \leq t < t_1$. Let K_S denote the characteristic function of a set $S \subset X$. Define

$$(4.3) \qquad u(s;\, t,\eta) \equiv \text{sgn}\,[\eta e^{-As}B_0K_{[0,t]}(s) + \eta e^{-A(s+h)}B_1K_{[-h,t-h]}(s)]$$

for $-h \leq s \leq t$ and $\eta \in R^n$, $\eta \neq 0$. When $u(s;\, t,\eta)$ is referred to with $-h \leq s \leq t$ it is understood that we are referring to problem P_1. The corresponding $u(s;\, t,\eta)$ for problem P_2 merely requires $u(s;\, t,\eta)$ have the form (4.3) for $0 \leq s \leq t$ and $u_0(\cdot;\, t,\eta) = v_0$. In problem P_3^o we do not invoke this symbol. The notation $\varphi(t,u)$ where $\{u,t\}$ is admissible in P_1, P_2, or P_3 is defined by

$$(4.4) \qquad \varphi(t,u) \equiv \int_0^t e^{-As}[B_0u(s) + B_1u(s-h)]ds.$$

It is also convenient to take the following definitions,

$$(4.5) \qquad z(t,\eta) \equiv \varphi(t,u(\cdot;\, t,\eta)),$$

$$(4.6) \qquad g(t,\eta) \equiv \langle\eta, z(t,\eta)\rangle.$$

<u>Proposition 4.3.</u> $\mathscr{R}(t)$ and $\mathscr{R}_3^o(t)$ are increasing.

<u>Proof:</u> The statement concerning $\mathscr{R}(t)$ is obvious. Note that

$\mathscr{R}_3^o(t)$, $t \geq h$ is merely $\mathscr{R}(t-h)$ for problem P with system $\mathscr{S}(A, B_0 + e^{-Ah}B_1)$. For $0 \leq t \leq h$, $\mathscr{R}_3^o(t) = \{0\}$, so $\mathscr{R}_3^o(t)$ is increasing.

<u>Proposition 4.4.</u> $\mathscr{R}_1(t)$, $\mathscr{R}_2(t)$ are both increasing if any of the following three conditions is satisfied:

(1) $\ker(B_0) \subset \ker(B_1)$ and (H1) is satisfied.

(2) $\ker(B_0) \subset \ker(B_1)$ and a matrix G satisfying the conditions of Proposition (4.1) also satisfies $\|G\|_\infty \leq 1$.

(3) (H4') is satisfied.

<u>Proof:</u> We shall prove only that $\mathscr{R}_1(t)$ is increasing is implied by (2) or (3). The remaining situations are similar. If $\ker(B_0) \subset \ker(B_1)$, then an $m \times m$ matrix G exists satisfying $B_1 = B_0 G$ (Proposition 4.1). If (2) is true we may take $\|G\|_\infty \leq 1$. If $p = \varphi(t_1, u)$ and $0 < t_2 - t_1 < h$, then $w(t) \equiv -Gu(t-h)$, $t_1 \leq t \leq t_2$ is measurable and satisfies

$$\|w(t)\|_\infty \leq 1,$$
$$B_0 w(t) + B_1 u(t-h) = 0$$

on $[t_1, t_2]$. Define $u_1 : [-h, t_2] \to K^m$ by the conditions $u_1 | [-h, t_1] = u$, and $u_1 | (t_1, t_2] = w$. Then $\varphi(t_2, u_1) = \varphi(t_1, u) = p \in \mathscr{R}_1(t_2)$ and we infer that $\mathscr{R}_1(t)$ is increasing.

Suppose that (H4') is satisfied. Choose t_1 and t_2 such that

$0 \leq t_1 \leq t_2$ and pick $\eta \in R^n$, $\eta \neq 0$. There are support hyperplanes $\pi_{1\eta}$ and $\pi_{2\eta}$ to $\mathscr{R}_1(t_1)$ and $\mathscr{R}_1(t_2)$ respectively with outward normal η. Thus there exist $p_1 \in \mathscr{R}_1(t_1)$ and $p_2 \in \mathscr{R}_1(t_2)$ such that $\langle\eta,p_1\rangle \geq \langle\eta,q\rangle$, $q \in \mathscr{R}_1(t_1)$ and $\langle\eta,p_2\rangle \geq \langle\eta,q\rangle$, $q \in \mathscr{R}_1(t_2)$. Hence $\langle\eta,p_1\rangle = g(t_1,\eta)$ and $\langle\eta,p_2\rangle = g(t_2,\eta)$. Now $g(t,\eta)$ as defined in (4.6) can be written in the form

$$(4.7) \quad g(t,\eta) = \int_{-h}^{0} |\eta e^{-A(s+h)}B_1|\,ds + \int_{0}^{t-h} |\eta e^{-As}B_0 + \eta e^{-A(s+h)}B_1|\,ds$$

$$+ \int_{t-h}^{t} |\eta e^{-As}B_0|\,ds, \quad \text{if} \quad t \geq h.$$

From (4.7) and (H4') one deduces that $\frac{\partial g}{\partial t}(t,\eta) \geq 0$, $t \geq h$ and $t \longmapsto g(t,\eta)$, $t \geq h$ is nondecreasing. Therefore, if $t_1 \geq h$, then

$$H_{1\eta} \equiv \{q \in R^n \mid \langle\eta,q\rangle \leq g(t_1,\eta)\} \subset H_{2\eta} \equiv \{q \in R^n \mid \langle\eta,q\rangle \leq g(t_2,\eta)\},$$

and since $\mathscr{R}_1(t_1) = \bigcap_{\eta\neq 0} H_{1\eta}$ and $\mathscr{R}_1(t_2) = \bigcap_{\eta\neq 0} H_{2\eta}$ we have $\mathscr{R}_1(t_1) \subset \mathscr{R}_1(t_2)$ for $t_2 \geq t_1 \geq h$. If $0 \leq t_1$, $t_2 \leq h$, then $\mathscr{R}_1(t_1) \subset \mathscr{R}_1(t_2)$ is clear. The fact that $\mathscr{R}_1(t)$ is increasing is now a simple deduction.

It is easy to construct examples that show that (1), (2), and (3) in the preceding proposition are in general independent. We give below two examples showing that the conclusion of Proposition 4.4 need not be true if some of the assumptions of Proposition 4.4 are dropped.

Example 4.2. Consider the scalar control system $\dot{x} = x + u(t) + Ku(t-1)$ where $1 - 2e < K < -e$. Using this system with problem P_1 we see that

$$g(t,1) = \int_{-1}^{0} |K| e^{-(s+1)} ds + \int_{0}^{t-1} |e^{-s} + Ke^{-(s+1)}| ds + \int_{t-1}^{t} e^{-s} ds, \quad t > 1.$$

Since $\mathscr{R}_1(t) = [-g(t,1), g(t,1)]$ is a compact interval and since $\frac{\partial g}{\partial t}(t,1) < 0$ for $t > 1$, it follows that $\mathscr{R}_1(t)$ is not increasing.

Example 4.3. Let $A = \begin{pmatrix} 1 & 0 \\ 0 & 1 \end{pmatrix}$, $B_0 = \begin{pmatrix} 1 \\ 0 \end{pmatrix}$, and $B_1 = \begin{pmatrix} 0 \\ 1 \end{pmatrix}$ in problem P_2 with $v_0 \equiv 0$. Then $\ker(B_0) \not\subset \ker(B_1)$ and $\mathscr{R}_2(t)$ is not increasing. For example, for $t > 1$ define $\mu(t)$ to be $\max\{x \in R \mid (x,0) \in \mathscr{R}_2(t)\}$. Then

$$\mu(t) = \int_{t-1}^{t} e^{-s} ds$$

so that μ decreases for $t > 1$.

Proposition 4.5. $\mathscr{R}_3^{\circ}(t)$ is expanding $t \geq h$ if and only if $\mathscr{S}(A, B_0 + e^{-Ah} B_1)$ is proper.

Proof: This follows at once from [11, pg. 73] and the remark in the

proof of Proposition 4.3.

<u>Proposition 4.6.</u> If (H3) is satisfied, then $\mathscr{R}_i(t)$, $i = 1,2$, are both expanding. Moreover, if $\ker(B_0) \subset \ker(B_1)$ and $\mathscr{R}_1(t)$ or $\mathscr{R}_2(t)$ is expanding, then $\mathscr{S}(A,B_0)$ is proper.

<u>Proof:</u> Note that $\mathscr{R}_i(t)$, $i = 1,2$, are increasing (Propositions 4.2d and 4.4). Choose t_1, t_2 satisfying $0 < t_1 < t_2$. Pick $q \in \mathscr{R}_1(t) \subset \mathscr{R}_1(t_2)$. If $q \notin \operatorname{Int}(\mathscr{R}_1(t_2))$, then $q \in \operatorname{Bd}(\mathscr{R}_1(t_2))$, the boundary of $\mathscr{R}_1(t_2)$. Consequently, there is an $\eta \neq 0$ which is an outward normal to a support hyperplane for $\mathscr{R}_1(t_2)$ through q; i.e.,

$$\langle \eta, p-q \rangle \leq 0, \qquad p \in \mathscr{R}_1(t_2).$$

The point q has the form $q = \varphi(t_1,u)$ where $\{u,t_1\}$ is admissible in P_1. A function $u_2: [-h,t_2] \to K^m$ is defined by

$$u_2(t) \equiv \begin{cases} u(t), & -h \leq t \leq t_1 \\ \operatorname{sgn}[\eta e^{-At} B_0], & t_1 < t \leq t_2 \end{cases}.$$

Then $\{u_2,t_2\}$ is admissible in P_1. If $p \equiv \varphi(t_2,u_2)$, then

$$\langle \eta, p-q \rangle = \int_{t_1}^{t_2} [|\eta e^{-As} B_0| + \eta e^{-As} B_1 u_2(s-h)]ds$$

$$\geq \int_{t_1}^{t_2} [|\eta e^{-As}B_0| - |\eta e^{-As}B_1|]ds$$

$$> 0$$

by (H3). This is a contradiction. Hence $\mathscr{R}_1(t)$ is expanding. The same proof works for $\mathscr{R}_2(t)$.

Now suppose $\ker(B_0) \subset \ker(B_1)$ and $\mathscr{R}_1(t)$ is expanding. If $\mathscr{S}(A,B_0)$ is not proper, then there is an $\eta \neq 0$, $\eta \in R^n$ such that $\eta e^{-At}B_0 \equiv 0$, and consequently $\eta e^{-At}B_1 \equiv 0$. Now the control function $u_1 \equiv 0$ has the form $u(s; t,\eta)$ (see Equation 4.3). Hence $0 \in \mathrm{Bd}\,\mathscr{R}_1(t)$, $t > 0$ so that $\mathscr{R}_1(t)$ is not expanding. Analogous reasoning holds for the case where $\mathscr{R}_2(t)$ is expanding.

It will be pointed out in section 7 when some solved examples of problems of type P_1, P_2, P_3^0 are presented that hypothesis (H3) cannot be omitted and still obtain $\mathscr{R}_i(t)$, $i = 1,2$ are expanding. Indeed, as we shall point out in the discussion of those examples, the hypotheses of the first part of Proposition 4.6 cannot be weakened, and there does not appear to be an analog of Theorem 17.2 in [11]. The sufficient condition of Hermes and LaSalle [11] can now be stated.

<u>Theorem 4.1.</u> Let $\Gamma(t)$ be any one of the reachable sets at time t, $\mathscr{R}(t)$, $\mathscr{R}_1(t)$, $\mathscr{R}_2(t)$, $\mathscr{R}_3^0(t)$. If $\Gamma(t)$ is expanding, if $\{\bar{u},t\}$ is an extremal control for the corresponding problem, and if $x(\bar{t}; x_0,\bar{u}) = 0$, then $\{\bar{u},\bar{t}\}$ is a time optimal solution to the problem

associated with $\Gamma(t)$.

The proof of this theorem is obvious. Of course, the result is not of much interest without computable criteria for showing $\Gamma(t)$ is expanding. Propositions 4.5 and 4.6 in conjunction with Propositions 4.2, 4.3, and 4.4 give us such criteria.

<u>Example 4.4.</u> Consider problem P_1 with $A = \begin{pmatrix} 0 & 1 \\ 0 & 0 \end{pmatrix}$, $B_0 = \begin{pmatrix} 0 \\ 0 \end{pmatrix}$, and $B_1 = \begin{pmatrix} 0 \\ 1 \end{pmatrix}$. Then $\mathscr{S}(A,B_0)$ is not proper, and it is easy to see $\mathscr{R}_1(t)$ is expanding. Moreover, (H3) is not satisfied.

5. Existence and Uniqueness for the Time Optimal Control Problem

It is easy to modify the uniqueness theorem in [11, pg. 69] to apply to problems P_i, $i = 1,2,3$. Two admissible controls $\{u_1,t_1\}$, $\{u_2,t_2\}$ are regarded as equivalent if $t_1 = t_2$ and $u_1(t) = u_2(t)$ a.e. on $[-h,t_1]$. An admissible control $\{u,t_1\}$ for P_1 is said to be bang-bang if $|u(t)| = m$ a.e. on $[-h,t_1]$. Similarly, an admissible control $\{u,t_1\}$ for P_2 (respectively P_3) is bang-bang if the above condition is satisfied a.e. on $[0,t_1]$ (respectively $[0,t_1-h]$). The following extension of a result in [11] is obtained.

Theorem 5.1. If $\{\bar{u},\bar{t}\}$ is an optimal solution to P_i implies $\{\bar{u},\bar{t}\}$ is bang-bang, then there is at most one optimal control for problem P_i, $i = 1,2,3$.

Proof: One merely supposes there are two optimal controls $\{\bar{u}_1,\bar{t}\}$, $\{\bar{u}_2,\bar{t}\}$ in problem P_i which differ on a subset of $[-h,\bar{t}]$ of positive measure. Then $x(\bar{t}; x_0,\bar{u}_1) = x_1 = x(\bar{t}; x_0,\bar{u}_2)$. If we define $w: [-h,\bar{t}] \to K^m$ by $w(t) = \dfrac{\bar{u}_1(t) + \bar{u}_2(t)}{2}$, then $\{w,\bar{t}\}$ is admissible in P_i. Moreover, it is clear that $x(\bar{t}; x_0,w) = x_1$, and $\{w,\bar{t}\}$ is not bang-bang. This is a contradiction.

One never obtains uniqueness of the optimal control problem P_1 if $0 \leq \bar{t} \leq h$ since the control $\{\bar{u},\bar{t}\}$ is not effective in $\mathcal{S}_h(A,B_0,B_1)$ for $\bar{t} - h \leq t \leq 0$. For this reason when we discuss

uniqueness of the solution to problem P_1 we assume $\bar{t} \geq h$. This is only a minor point and the situation $0 \leq \bar{t} \leq h$ can essentially be treated as in [11].

The next result is a reformulation of a general existence theorem obtained in [2]. Actually, problem P_3 was not discussed there, but the existence theorem easily extends to this situation.

Theorem 5.2. If there is at least one admissible control $\{u, t_1\}$ for problem P_i satisfying $x(t_1; x_0, u) = x_1$, then there is an optimal solution+ to problem P_i, $i = 1,2,3$.

Proposition 5.3. There is at most one solution to problem P_1 if $\mathcal{S}(A,B_0)$, $\mathcal{S}(A,B_0+e^{-Ah}B_1)$, and $\mathcal{S}(A,B_1)$ are normal (see [11] for the definition of normal). The statement of uniqueness holds for problem P_2 if $\mathcal{S}(A,B_0+e^{-Ah}B_1)$ and $\mathcal{S}(A,B_0)$ are normal, while for P_3 the normality of $\mathcal{S}(A,B_0+e^{-Ah}B_1)$ suffices.

Proof: We consider only problem P_1. Clearly, the necessary condition (2.1) and normality of the three systems imply that the hypothesis of Theorem 5.1 is satisfied.

+The problems P_i, $i = 1,2,3$ were formulated so that the admissible controls were in the class of Lebesgue measurable functions. The results in [2] when specialized to the present situation reveal that we could just as well have restricted our attention to piecewise continuous controls.

If A, B_0, B_1, and e^{-Ah} are known, then computable conditions assuring the normality of $\mathcal{S}(A,B_0)$, $\mathcal{S}(A,B_0+e^{-Ah}B_1)$, and $\mathcal{S}(A,B_1)$ are given in [11]. In general, e^{-Ah} is difficult to determine so we would like to obtain conditions that can be directly computed from A, B_0, B_1. (In this connection it should be observed that, in general, the normality of any two of the systems $\mathcal{S}(A,B_0)$, $\mathcal{S}(A,B_0+e^{-Ah}B_1)$, $\mathcal{S}(A,B_1)$ does <u>not</u> imply the normality of the third. For instance in Example 3.2 $\mathcal{S}(A,B_0)$ and $\mathcal{S}(A,B_1)$ are normal but $\mathcal{S}(A,B_0+e^{-Ah}B_1)$ is not normal if $h = 1$.) Some results are possible in this direction. For example, let us consider the control system $\mathcal{S}_h(A,B_0,B_1)$ discussed in Example 4.1. Along with the differential operator L in that example we consider its adjoint L^* given by

$$L^*x = x^{(n)} - a_{n-1}x^{(n-1)} + \cdots + (-1)^n a_0 x.$$

It is now assumed that $|b_0| + |b_1| \neq 0$ in Example 4.1.

<u>Proposition 5.4.</u> System $\mathcal{S}(A,B_0)$ is normal if and only if $b_0 \neq 0$. System $\mathcal{S}(A,B_1)$ is normal if and only if $b_1 \neq 0$. If $b_0 = b_1$, and if $Lx = 0$ has no nontrivial solutions of period $2h$, then $\mathcal{S}(A,B_0+e^{-Ah}B_1)$ is normal. On the other hand if $b_0 = -b_1$, then $\mathcal{S}(A,B_0+e^{-Ah}B_1)$ is normal if and only if $Lx = 0$ has no nontrivial solutions of period h.

Let $\lambda(A)$ denote the eigenvalues of A, and let $\operatorname{Re}\lambda(A)$ denote the real parts of $\lambda(A)$.

<u>Proposition 5.5.</u> If $|b_0| < |b_1|$, and if $\operatorname{Re} \lambda(A) \leq 0$, then $\mathcal{S}(A, B_0 + e^{-Ah} B_1)$ is normal.

<u>Proposition 5.6.</u> If $|b_0| > |b_1|$, and if $\operatorname{Re} \lambda(A) \geq 0$, then $\mathcal{S}(A, B_0 + e^{-Ah} B_1)$ is normal.

Propositions 5.4, 5.5 and 5.6 are pretty clear, so we will only indicate the proof for one of these (Proposition 5.5). If $b_0 = 0$, then Proposition 5.5 is true. Thus suppose $b_0 \neq 0$. Suppose $\mathcal{S}(A, B_0 + e^{-Ah} B_1)$ is not normal. Then there is a nontrivial solution ψ of $L^* x = 0$ such that

$$b_0 \psi(t) + b_1 \psi(t+h) \equiv 0.$$

An easy induction argument shows that

$$\psi(t+Kh) \equiv (-1)^K \left(\frac{b_0}{b_1} \right)^K \psi(t) \tag{5.1}$$

$K = 1, 2, 3, \ldots$. Since $\psi(t)$ is nontrivial there is a sequence t_K such that $t_K \to \infty$ as $K \to \infty$ and $\psi(t_K) \to 0$ as $K \to \infty$. This contradicts the assumption that $\operatorname{Re} \lambda(-A) = -\operatorname{Re} \lambda(A) \geq 0$. This proves Proposition 5.5.

<u>Example 5.1.</u> Let $Lx = \ddot{x} + a_1 \dot{x} + a_0 x$, $h = 1$, $b_0 = 2$, $b_1 = 1$, $a_1 = 2 \log 2$, and $a_0 = (\log 2)^2 + \pi^2$. Then $\lambda(A) = \{-\log 2 \pm \pi i\}$,

and

$$\psi(t) = \exp[t(\log 2 - \pi i)]$$

is a solution of $L^*x = 0$ satisfying

$$2\psi(t) + \psi(t+1) \equiv 0$$

and for this system $\mathscr{S}(A, B_0 + e^{-Ah}B_1)$ is not normal.

<u>Example 5.2.</u> Using the same notation as Example 5.1, consider the control system

$$L^*x = u(t) + 2u(t-1).$$

Then

$$\psi(t) \equiv \exp(\pi i - \log 2)t$$

is a solution of $L\bar{x} = 0$ and

$$\psi(t) + 2\psi(t+1) \equiv 0,$$

and for this system $\mathscr{S}(A, B_0 + e^{-Ah}B_1)$ is not normal.

6. Synthesis for the Special Time Optimal Control Problem

Neustadt's method of synthesis [21] can be extended to cover problems P_1, P_2, P_3^o. Some rather restrictive assumptions are required for problems P_1 and P_2. It is assumed in our discussion in this section that $x_1 = 0$ (x_1 is the "target"). The development will be carried out only for problem P_1, but if the arguments are suitably adapted problems P_2 and P_3^o can also be treated. The validity of Neustadt's approach depends on the following condition for problem P: If $\{\bar{u},\bar{t}\}$ is an extremal control for problem P satisfying $x(\bar{t}; x_0,\bar{u}) = 0$, then $\{\bar{u},\bar{t}\}$ is an optimal solution to problem P. Neustadt [21] assumed that the system $\mathcal{S}(A,B)$ was normal so that the above condition turns out to be satisfied by the sufficient condition in [11, pg. 72]. For the problems we are studying, however, the optimal control $\{\bar{u},\bar{t}\}$ may be unique where all three of the systems $\mathcal{S}(A,B_0)$, $\mathcal{S}(A,B_0+e^{-Ah}B_1)$, $\mathcal{S}(A,B_1)$ are normal and yet $\mathcal{R}_1(t)$ can fail to be expanding (see Example 7.1) so that the analogous sufficient condition for problem P_1 could fail.

Recalling the definition of $z(t,\eta)$ in Equation (4.5), we can obtain the following proposition.

Proposition 6.1. Let the following conditions be satisfied: $\ker(B_0) \subset \ker(B_1)$, $\mathcal{S}(A,B_0)$, $\mathcal{S}(A,B_0+e^{-Ah}B_1)$, $\mathcal{S}(A,B_1)$ are normal, and (H4). Let $S \equiv \{\eta \in R^n \mid \langle\eta,x_0\rangle < 0\}$. If the optimal control $\{\bar{u},\bar{t}\}$ exists for problem P_1, then it has the form

(4.3). Any vector $\eta \in S$ which maximizes the time t for which $\langle\eta, z(t,\eta)\rangle = -\langle\eta, x_0\rangle$ may be used in (4.3) to obtain the optimal control $\{\bar{u},\bar{t}\} = \{u(\cdot,\bar{t},\eta),\ \bar{t}\}$. Conversely, if η defines the optimal control $\{\bar{u},\bar{t}\}$ by means of (4.3), then it maximizes the above time t.

<u>Proof</u>: Note that $g(t,\eta)$ defined in (4.6) can be written in the form (4.7) if $t \geq h$, and if $0 \leq t \leq h$ we get

$$(6.1) \qquad g(t,\eta) = \int_0^t |\eta e^{-As}B_0| + |\eta e^{-As}B_1|\,ds.$$

Hence (4.7), (6.1), and Corollary 4.1 imply that $\frac{\partial g}{\partial t}(t,\eta) > 0$ so that $t \longmapsto g(t,\eta)$ $t \geq 0$ is strictly increasing. The function $(t,\eta) \longmapsto g(t,\eta)$, $t \geq 0$, $\eta \in S$ is continuous. For $\eta \in R^n$, $\eta \neq 0$ we have that

$$(6.2) \qquad \langle\eta, z(t,\eta)\rangle > \langle\eta, x\rangle, \quad x \in \mathscr{R}_1(t),\ x \neq z(t,\eta),$$

by the normality assumptions in the proposition. Define $f\colon [0,\infty) \times S \times R^n \to R$ by the equation

$$f(t,\eta,x_0) \equiv \langle\eta, z(t,\eta) + x_0\rangle,$$

and define

$$H_0 \equiv \{\eta \in R^n \mid \eta \neq 0,\ \langle\eta,-x_0\rangle = \max_{y\in\mathscr{R}_1(\bar{t})} \langle\eta,y\rangle\}.$$

The set H_0 is convex. Observe that

$$(6.3) \qquad f(0,\eta,x_0) < 0, \quad \eta \in S$$

whereas

$$(6.4) \qquad f(\bar{t},\eta,x_0) > 0, \quad \eta \in S \setminus H_0.$$

The assumptions of the proposition imply that $\mathscr{R}_1(t)$ is expanding. Hence Theorem 4.1 and relation (6.2) assure us that

$$(6.5) \qquad f(t,\eta,x_0) = 0$$

implies that $t = \bar{t}$ if $\eta \in H_0$. Hence using (6.3), (6.4) and the last remark it is seen that (6.5) defines t implicitly as a function of η, for $\eta \in S$. We denote the function so defined by F. Then F is continuous and $F(\eta) = \bar{t}$, $\eta \in H_0$, and $\bar{t} > F(\eta)$, $\eta \in S\setminus H_0$.

The purpose of the observation in the above proposition is to obtain a method for finding a vector η which can be used in (4.3) to determine the optimal control. It is easy to see that g is a C^1 function on $([0,\infty)\setminus\{h\}) \times S$ by direct computation in formulas (4.7) and (6.1) using standard results on the differentiation of Lebesgue integrals

involving parameters [20, pp. 216-217] and the normality hypotheses of Proposition 6.1. Hence if $\eta \in S$ is such that $F(\eta) \neq h$, and $\frac{\partial g}{\partial t}(F(\eta),\eta) \neq 0$, then the implicit function theorem tells us that F is continuously differentiable on a neighborhood of η. Using the fact that under the assumptions of Proposition 6.1 $\mathscr{R}_1(t)$ is expanding (so that the sufficient condition, Theorem 4.1, applies to P_1) and the above remarks, the gradient technique for determining the maximum of F on S can be applied to Problem P_1. We do not carry out the details here, but refer the reader to Neustadt's paper [21].

7. Examples.

In this section we solve some examples which illustrate the strange behavior of solutions to problems of type P_1, P_2, P_3^o. All of the examples are two dimensional. Since we would like as much as possible to avoid using superscripts and subscripts, we shall agree in this section that $(x,y) = (x^1,x^2)$.

Example 7.1. The system equations are

$$\begin{aligned} \mathring{x} &= y \\ \mathring{y} &= u(t) + u(t-1). \end{aligned} \tag{7.1}$$

Thus $A = \begin{pmatrix} 0 & 1 \\ 0 & 0 \end{pmatrix}$, $B_0 = B_1 = \begin{pmatrix} 0 \\ 1 \end{pmatrix}$, $h = 1$. Here we consider a problem of type P_1 with boundary conditions,

$$x(t_1;\ (x_0,y_0),u) = y(t_1;\ (x_0,y_0),u) = 0. \tag{7.2}$$

It is not difficult to see that given any $(x_0,y_0) \in R^2$ there is an admissible $\{u,t_1\}$ satisfying (7.2). Hence there is (Theorem 5.2) an optimal solution to problem P_1. Proposition 5.4 and Theorem 5.1 assure us that the optimal control $\{\bar{u},\bar{t}\}$ is unique if $\bar{t} \geq 1$ and if $0 \leq \bar{t} < 1$, $\{\bar{u},\bar{t}\}$ is unique where it is effective, i.e., on $[-1,\bar{t}-1]$ and $[0,\bar{t}]$. The necessary condition (2.1) when applied to this problem yields

$$(7.3) \qquad \bar{u}(t) = \begin{cases} \operatorname{sgn}[\psi^2(t+1)] & -1 \leq t \leq \bar{t} - 1 \\ \text{undetermined} & \bar{t} - 1 < t < 0 \\ \operatorname{sgn}[\psi^2(t)] & 0 \leq t \leq \bar{t} \end{cases}$$

if $0 \leq \bar{t} \leq 1$, and if $\bar{t} > 1$, then

$$(7.3') \qquad \bar{u}(t) = \begin{cases} \operatorname{sgn}[\psi^2(t+1)] & , \quad -1 \leq t < 0 \\ \operatorname{sgn}[\psi^2(t) + \psi^2(t+1)], & 0 \leq t < \bar{t} - 1 \\ \operatorname{sgn}[\psi^2(t)] & , \quad \bar{t} - 1 \leq t \leq \bar{t} \end{cases}$$

where $\psi = (\psi^1, \psi^2)$ is a nontrivial solution of the adjoint equation $\dot{\psi} = -\psi A$. Hence $\psi^2(t) = \mu t + \delta$ where $\psi^2(t)$ is not identically zero. Along with the optimal control $\{\bar{u}, \bar{t}\}$ we consider the effective optimal control $\{\bar{v}, \bar{t}\}$ where

$$(7.4) \qquad \bar{v}(t) = \bar{u}(t) + \bar{u}(t-1).$$

With problem P_1 for system (7.1) and boundary conditions (7.2) we consider the auxiliary problem P with system $\mathcal{S}(A, B_0)$ only with the restraint set changed to $[-2,2]$. The synthesis for this problem except for an obvious scaling factor of 2 (i.e., the switching curve is $x = -y^2/4$, $y \geq 0$ and $x = y^2/4$, $y \leq 0$) is described in [22]. If $\{\bar{w}, \bar{t}\}$ is the optimal solution to the

auxiliary problem P and if $\bar{w}$ is expressible in the form $u(t) + u(t-1)$ with $\{u,\bar{t}\}$ admissible in P_1, then $\{u,\bar{t}\}$ is the optimal solution of P_1. Thus P_1 can be considered solved if $0 \leq \bar{t} \leq 1$. Figure 1 shows the reachable set $\mathscr{R}_1(1)$ and the synthesis in case $(x_0,y_0) \in \mathscr{R}_1(1)$.

Figure 1.

Thus we now assume that $(x_0,y_0) \notin \mathscr{R}_1(1)$ so that $\bar{t} > 1$. Here the situation is a good deal more complicated since the above $\bar{w}$ is no longer expressible in the required form. It is noted from (7.3') and (7.4) that the effective optimal control has $\bar{v}(t)$ taking only the values in the set $\{-2,0,2\}$, $0 \leq t \leq \bar{t}$. For brevity let us denote the optimal trajectory issuing from (x_0,y_0) by $(\bar{x},\bar{y})$. Then $(\bar{x}(t),\bar{y}(t))$ can reach $(0,0)$ only along one of the two curves

$$S_+ : x = y^2/4, \quad y \leq 0,$$
$$S_- : x = -y^2/4, \quad y \geq 0.$$

If $\mu = 0$, then $\delta \neq 0$ and from (7.3') we see $u^*(t) \equiv \operatorname{sgn}(\delta)$, i.e.,

there is no switching. Hence $\delta > 0$ implies $(x_0,y_0) \in S_+$ and $\delta < 0$ implies $(x_0,y_0) \in S_-$. Conversely, $(x_0,y_0) \in S_+ \cup S_-$ implies $\mu = 0$. If $(x_0,y_0) \notin S_+ \cup S_-$, then $\mu \neq 0$. It is not difficult to show that $\mu > 0$ or $\mu < 0$ accordingly as (x_0,y_0) is to the right of $S_+ \cup S_-$ or to the left of $S_+ \cup S_-$. Let $-\delta/\mu$ be denoted by β. If one finds $\bar{v}(t) = \bar{u}(t) + \bar{u}(t-1)$ using (7.3'), then it is clear that both $\bar{v}$ and $\bar{u}$ will be known completely if the disposition of the points $-\frac{1}{2} + \beta$, β, $\frac{1}{2} + \beta$ relative to $[0,\bar{t}]$ can be discovered. Now the boundary conditions (7.2) impose additional conditions on $\bar{t}$ and β. In fact with $u = \bar{u}$ and $t_1 = \bar{t}$ (7.2) reduces to

$$(7.5) \qquad x_0 = \int_0^{\bar{t}} s\bar{v}(s)ds$$

$$y_0 = -\int_0^{\bar{t}} \bar{v}(s)ds.$$

By a systematic and laborious enumeration of the possible positions of $-\frac{1}{2} + \beta$, β, $\frac{1}{2} + \beta$ relative to $[0,\bar{t}]$ it can be shown that (7.3') and (7.5) uniquely determine $\bar{t}$ and β as functions of $(x_0,y_0) \notin S_+ \cup S_-$. In principle at least the determination of $\bar{t}(x_0,y_0)$ and $\beta(x_0,y_0)$ represents no difficulty, so we shall only describe the results. However, it must be pointed out that when the possibilities are exhausted our calculations revealed the following: There corresponds to each $(x_0,y_0) \in R^2 \setminus \mathscr{R}_1(1)$ exactly one extremal control satisfying the boundary conditions (7.2).

Hence an extremal control satisfying (7.2) must be time optimal. (It will be seen momentarily that $\mathscr{R}_1(t)$ is not expanding, so Theorem 4.1 does not apply.)

Let D_R (respectively, D_L) denote the open region to the right (respectively, left) of $S_+ \cup S_-$. Sets D_i, $i = 1,2,\ldots,7$ are defined by the following relations:

$$D_1 = \{(x_0,y_0) \in D_R \mid x_0 \leq \frac{1}{2} - \frac{y_0}{2} - \frac{y_0^2}{8}\},$$

$$D_2 = \{(x_0,y_0) \in D_R \mid -2 \leq y_0 < 0,\ \frac{1}{2} - \frac{y_0}{2} - \frac{y_0^2}{8} \leq x_0 \leq \frac{1}{2} - \frac{y_0}{2} + \frac{y_0^2}{8}\},$$

$$D_3 = \{(x_0,y_0) \in D_R \mid y_0 \geq 0,\ \frac{1}{2} - \frac{y_0}{2} - \frac{y_0^2}{8} < x_0 \leq \frac{3}{2} - \frac{3}{2}y_0 + \frac{y_0^2}{8}\} \cup$$
$$\{(x_0,y_0) \in D_R \mid y_0 \leq 0,\ \frac{1}{2} - \frac{y_0}{2} + \frac{y_0^2}{8} \leq x_0 \leq \frac{3}{2} - \frac{y_0}{2} - \frac{y_0^2}{8}\},$$

$$D_4 = \{(x_0,y_0) \in D_R \mid y_0 \leq -2,\ \frac{y_0^2}{4} \leq x_0 \leq \frac{y_0^2}{4} - \frac{y_0}{2}\},$$

$$D_5 = \{(x_0,y_0) \in D_R \mid y_0 \leq 0,\ -\frac{y_0}{2} + \frac{y_0^2}{4} \leq x_0 \leq \frac{3}{2} - 2y_0 + \frac{y_0^2}{4}$$
$$\text{and } x_0 \geq \frac{3}{2} - \frac{y_0}{2} - \frac{y_0^2}{8}\},$$

$$D_6 = \{(x_0,y_0) \in D_R \mid 0 \leq y_0 \leq 2,\ \frac{3}{2} - \frac{3}{2}y_0 + \frac{y_0^2}{8} \leq x_0 \leq \frac{3}{2} - \frac{y_0^2}{4}\} \cup$$
$$\{(x_0,y_0) \in D_R \mid y_0 \geq 2,\ x_0 \leq \frac{3}{2} - \frac{y_0^2}{4}\},$$

$$D_7 = \{(x_0,y_0) \in D_R \mid y_0 \geq 0,\ x_0 \geq \frac{3}{2} - \frac{y_0^2}{4}\} \cup$$
$$\{(x_0,y_0) \in D_R \mid y_0 \leq 0,\ x_0 \geq \frac{3}{2} - 2y_0 + \frac{y_0^2}{4}\}.$$

We define D_{-i}, $i = 1,2,\ldots,7$ by symmetry through the origin, i.e.,

$D_{-i} = -D_i = \{(x_0,y_0) \mid -(x_0,y_0) \in D_i\}$, $i = 1,2,\ldots,7$. Then $\left[\bigcup_{i=1}^{7} D_{-i}\right] \cup \left[\bigcup_{i=1}^{7} D_i\right] \cup [S_+ \cup S_-]$ is R^2, and $\mathscr{R}_1(1) = \mathrm{cl}\,(D_1) \cup \mathrm{cl}\,(D_{-1})$, where $\mathrm{cl}\,(E)$ denotes the closure of E. The regions D_{-i}, D_i, S_+, S_-, $i = 1,2,\ldots,7$ are depicted in Figure 2.

Figure 2.

The following formulas obtain for $\bar{t}$ and β:

$$\bar{t}(x_0,y_0) = \begin{cases} \dfrac{y_0 + \sqrt{2y_0^2 + 8x_0}}{2}, & (x_0,y_0) \in D_1 \\[2ex] -\dfrac{x_0}{y_0} + \dfrac{1}{2y_0} - \dfrac{y_0}{8} + \dfrac{1}{2}, & (x_0,y_0) \in D_2 \\[2ex] 1 + \dfrac{y_0}{4} + \dfrac{1}{2}\sqrt{4x_0 + y_0^2/2 + 2y_0 - 2}, & (x_0,y_0) \in D_3 \\[2ex] -\dfrac{x_0}{y_0} - \dfrac{y_0}{4}, & (x_0,y_0) \in D_4 \\[2ex] \dfrac{y_0}{4} + \dfrac{1}{2} + \dfrac{1}{4}\sqrt{3y_0^2 + 12y_0 + 24x_0}, & (x_0,y_0) \in D_5 \\[2ex] \dfrac{y_0}{2} + \dfrac{1}{2} + \dfrac{1}{2}\sqrt{6(x_0 + y_0^2/4)}, & (x_0,y_0) \in D_6 \\[2ex] \dfrac{y_0}{2} + \sqrt{1 + 2(x_0 + y_0^2/4)}, & (x_0,y_0) \in D_7, \end{cases}$$

$$\bar{t}(x_0,y_0) = \begin{cases} \dfrac{y_0}{2}, & (x_0,y_0) \in S_- \\ -\dfrac{y_0}{2}, & (x_0,y_0) \in S_+, \end{cases}$$

$$\beta(x_0,y_0) = \begin{cases} \dfrac{y_0 + 2\bar{t}}{4}, & (x_0,y_0) \in D_1 \cup D_7 \\ \dfrac{y_0 + 4\bar{t} - 2}{4}, & (x_0,y_0) \in D_2 \\ \dfrac{y_0 + 4\bar{t}}{8}, & (x_0,y_0) \in D_3 \\ \dfrac{y_0 + 2\bar{t}}{2}, & (x_0,y_0) \in D_4 \\ \dfrac{y_0 + 2\bar{t} + 2}{6}, & (x_0,y_0) \in D_5 \\ \dfrac{y_0 + 4\bar{t} - 2}{6}, & (x_0,y_0) \in D_6. \end{cases}$$

It is noted that if $D_i \cap D_k \neq \emptyset$ for some $i,k = 1,2,\ldots,7$, then there is still no ambiguity in the formulas for $\bar{t}(x_0,y_0)$ and $\beta(x_0,y_0)$. In order to complete the definition of $\bar{t}$ and β on all of R^2 we merely take advantage of the symmetry in the problem to observe that $\bar{t}(x_0,y_0) = \bar{t}(-x_0,-y_0)$ and $\beta(x_0,y_0) = \beta(-x_0,-y_0)$ if

$(x_0,y_0) \in D_L$. We note that $\bar{t}$ is not continuous at points on $S_+ \cup S_-$ and on $D_1 \cap \mathrm{cl}\,(D_3)$. However, at every other point of D_R both $\bar{t}$ and β are continuous.

Now to see the nature of the optimal trajectories we describe the optimal effective control $\bar{v}(t) = \bar{u}(t) + \bar{u}(t-1)$ if the initial data $(x_0,y_0) \in D_i$, $i = 1,2,\ldots,7$. We use $\bar{v}_i$ to denote the optimal effective control defined on $[0,\bar{t}(x_0,y_0)]$ if $(x_0,y_0) \in D_i$, $i = 1,2,\ldots,7$. Of course, if $(x_0,y_0) \in D_{-i}$, then the optimal effective control is $-\bar{v}_i$, $i = 1,2,\ldots,7$. The formulas for $\bar{v}_i$ are as follows:

$$\bar{v}_1(t) = \begin{cases} -2 & 0 \leq t \leq \beta \\ +2 & \beta < t \leq \bar{t} \end{cases},$$

$$\bar{v}_2(t) = \begin{cases} 0\,, & 0 \leq t \leq \bar{t} - 1 \\ -2\,, & \bar{t} - 1 < t \leq \beta \\ +2\,, & \beta < t \leq \bar{t} \end{cases},$$

$$\bar{v}_3(t) = \begin{cases} -2\,, & 0 \leq t \leq -\frac{1}{2} + \beta \\ 0\,, & -\frac{1}{2} + \beta < t \leq \bar{t} - 1 \\ -2\,, & \bar{t} - 1 < t \leq \beta \\ +2\,, & \beta < t \leq 1 \\ 0\,, & 1 < t \leq \frac{1}{2} + \beta \\ +2\,, & \frac{1}{2} + \beta < t \leq \bar{t} \end{cases}$$

$$\bar{v}_4(t) = \begin{cases} 0 & 0 \leqq t \leqq \beta \\ +2 & \beta < t \leqq \bar{t} \end{cases}$$

$$\bar{v}_5(t) = \begin{cases} -2\,, & 0 \leqq t \leqq -\frac{1}{2} + \beta \\ 0\,, & -\frac{1}{2} + \beta < t \leqq \beta \\ +2\,, & \beta < t \leqq 1 \\ 0\,, & 1 < t \leqq \frac{1}{2} + \beta \\ +2\,, & \frac{1}{2} + \beta < t \leqq \bar{t} \end{cases}$$

$$\bar{v}_6(t) = \begin{cases} -2\,, & 0 \leqq t \leqq -\frac{1}{2} + \beta \\ 0\,, & -\frac{1}{2} + \beta < t \leqq \bar{t} - 1 \\ -2\,, & \bar{t} - 1 < t \leqq \beta \\ 0\,, & \beta < t \leqq \frac{1}{2} + \beta \\ +2\,, & \frac{1}{2} + \beta < t \leqq \bar{t} \end{cases}$$

$$\bar{v}_7(t) = \begin{cases} -2\,, & 0 \leqq t \leqq -\frac{1}{2} + \beta \\ 0\,, & -\frac{1}{2} + \beta < t \leqq \frac{1}{2} + \beta \\ +2\,, & \frac{1}{2} + \beta < t \leqq \bar{t} \end{cases}$$

If $(x_0,y_0) \in D_{\pm 1} \cup D_{\pm 2} \cup D_{\pm 4} \cup D_{\pm 6} \cup D_{\pm 7}$, then the optimal trajectory, $(\bar{x}(t),\bar{y}(t))$, beginning at (x_0,y_0) can be described in a simple geometric fashion. If $(x_0,y_0) \in \mathrm{cl}\,(D_1 \cup D_{-1}) = \mathscr{R}_1(1)$, then this description is given in Figure 1. Evidently, if $(x_0,y_0) \in D_4$, then $\bar{v}_4(t)$ switches from 0 to +2 as $(\bar{x}(t),\bar{y}(t))$ crosses S_+. Moreover, in all cases where $(x_0,y_0) \in D_R$ the last

switch occurs as $(\bar{x}(t),\bar{y}(t))$ crosses S_+. Now let $C_{21} = \{(x,y) \mid x = \frac{1}{2} - \frac{y}{2} - \frac{y^2}{8},\ -2 \leq y \leq 0\}$ (note C_{21} is a segment of Bd $(\mathscr{R}_1(1))$). Then if $(x_0,y_0) \in D_2$, the point $(\bar{x}(t),\bar{y}(t))$ coasts to C_{21} and then the synthesis for $\mathscr{R}_1(1)$ obtains (Figure 1). Let curves C_{61}, C_{62}, C_{63} be defined as follows:

$$C_{61} = \{(x,y) \mid x = \frac{3}{8} - \frac{3}{4}y + \frac{y^2}{8},\ -1 \leq y \leq 1\},$$

$$C_{62} = \{(x,y) \mid x = \frac{3}{8} - \frac{y}{2} - \frac{y^2}{8},\ -1 \leq y \leq 1\},$$

$$C_{63} = \{(x,y) \mid x = -\frac{y}{2} + \frac{y^2}{4},\ -1 \leq y \leq 0\}.$$

If $(x_0,y_0) \in D_6$, then the first, second, and third switches of $\bar{v}_6(t)$ take place as $(\bar{x}(t),\bar{y}(t))$ crosses C_{6i}, $i = 1,2,3$ respectively. Finally, define $C_{71} = \{(x,y) \mid x = \frac{y^2}{4} - y,\ y \leq -1\}$. If $(x_0,y_0) \in D_7$, then the first switch of $\bar{v}_7(t)$ happens when $(\bar{x}(t),\bar{y}(t))$ crosses C_{71}. If $(x_0,y_0) \in D_{-2} \cup D_{-4} \cup D_{-6} \cup D_{-7}$, then by use of symmetry the optimal trajectories are similarly described using curves $C_{-ij} = -C_{ij}$. The synthesis for $(x_0,y_0) \in D_2 \cup D_4 \cup D_{-6} \cup D_{-7}$ is shown in Figure 3.

Figure 3.

For $(x_0,y_0) \in D_3 \cup D_5$ the set of "first switching points" do not

lie on a curve and the situation is too complex to describe geometrically. Some typical optimal trajectories are given in Figure 4 for $(x_0, y_0) \in D_{\pm 3} \cup D_{\pm 5}$.

Figure 4.

It is interesting to note that some of the optimal trajectories initiating in D_3 or D_6 can come to rest on the x-axis for a positive time duration before continuing on to the origin. Trajectory Δ in Figure 4 shows an instance of this, but this is not typical.

In this example, $\mathscr{S}(A,B_0)$, $\mathscr{S}(A,B_1)$, and $\mathscr{S}(A,B_0+e^{-A}B_1)$ are all normal (and all proper) and yet $\mathscr{R}_1(t)$ is <u>not expanding</u> although $\mathscr{R}_1(t)$ is increasing. The boundary of $\mathscr{R}_1(t)$ for a few values of t is sketched in Figure 5.

Figure 5.

This figure clearly shows $\mathscr{R}_1(t)$ is not expanding.

An example of a problem of the form P_3^o is now considered.

<u>Example 7.2.</u> The example considered here is exactly the same as that treated in Example 7.2 except that here we impose the constraints

$$u_0 = u_{t_1} = 0. \tag{7.6}$$

We give only a brief discussion of the solution to P_3^o. The reachable set $\mathscr{R}_3^o(t)$ is the same as $\mathscr{R}(t-1)$ for system $\mathscr{S}(A,B_0+e^{-A}B_1)$. The control system $\mathscr{S}(A,B_0+e^{-A}B_1)$ is given by

$$\begin{aligned} \dot{x} &= y - u(t) \\ \dot{y} &= 2u(t). \end{aligned} \tag{7.7}$$

Now given $(x_0,y_0) \in R^2$ there is an admissible control $\{u,t_1\}$ for P with system (7.7) such that the response of (7.7) to this control satisfies

$$x(t_1;\ (x_0,y_0),u) = y(t_1;\ (x_0,y_0),u) = 0.$$

Hence the same is true of (7.1) with $\{u,t_1+1\}$ admissible in P_3^o. This assures us that an optimal control $\{\bar{u},\bar{t}\}$ for P_3^o exists and is unique (Theorem 5.2, Proposition 5.3). We note that if $u(t) \equiv 1$ in (7.7) then we obtain the curve

$$S_+: \quad x = \frac{y^2}{4} - \frac{y}{2}, \qquad y \leq 0,$$

and if $u(t) \equiv -1$ we obtain

$$S_-: \quad x = -\frac{y^2}{4} - \frac{y}{2}, \qquad y \geq 0.$$

Figure 6 illustrates the synthesis for $\bar{u}$ using the auxiliary trajectories from (7.7).

Figure 6.

We let D_R (respectively, D_L) denote the open region to the right (respectively, left) of $S_+ \cup S_-$. For this problem the regions D_i, $i = 1,2,\ldots,5$ are as follows:

$$D_1 = \{(x_0,y_0) \in D_R \mid x_0 \leq \frac{1}{2} - y_0 - \frac{y_0^2}{8}\},$$

$$D_2 = \{(x_0,y_0) \in D_R \mid \frac{1}{2} - y_0 - \frac{y_0^2}{8} \leq x_0 \leq 2 - \frac{5}{2}y_0 + \frac{y_0^2}{4}$$
$$\text{and } x_0 \leq 2 - \frac{y_0}{2} - \frac{y_0^2}{4}\},$$

$$D_3 = \{(x_0,y_0) \in D_R \mid 2 - \frac{y_0}{2} - \frac{y_0^2}{4} \leq x_0 \leq 2 - \frac{5}{2} y_0 + \frac{y_0^2}{4}\}$$

$$D_4 = \{(x_0,y_0) \in D_R \mid y_0 \geq 2 \text{ and } x_0 \leq 2 - \frac{y_0}{2} - \frac{y_0^2}{4}\} \cup$$
$$\{(x_0,y_0) \in D_R \mid y_0 \leq 2 \text{ and } 2 - \frac{5}{2} y_0 + \frac{y_0^2}{4} \leq x_0 \leq 2 - \frac{y_0}{2} - \frac{y_0^2}{4}\},$$

$$D_5 = \{(x_0,y_0) \in D_R \mid x_0 \geq 2 - \frac{5}{2} y_0 + \frac{y_0^2}{4},\ x_0 \geq 2 - \frac{y_0}{2} - \frac{y_0^2}{4}\}.$$

The sets D_{-i}, $i = 1,2,\ldots,5$ are defined by symmetry as in Example 7.1. We have

$$\left[\bigcup_{i=1}^{5} D_i\right] \cup \left[\bigcup_{i=1}^{5} D_{-i}\right] \cup [S_+ \cup S_-] = R^2.$$

The regions $D_{\pm i}$, $i = 1,2,\ldots,5$ are shown in Figure 7.

Figure 7.

Using the boundary conditions (7.2) and the maximum principal for P_3^o one can show

$$\bar{u}(t) = \begin{cases} 0\,, & -1 \leq t \leq 0 \\ -1\,, & 0 < t \leq \lambda \\ +1\,, & \lambda < t < \bar{t} - 1 \\ 0\,, & \bar{t} - 1 \leq t \leq \bar{t} \end{cases},$$

where

$$\bar{t}(x_0,y_0) = 1 + \frac{y_0}{2} + \frac{1}{2}\sqrt{2y_0^2 + 4y_0 + 8x_0}\,,$$

$$\lambda(x_0,y_0) = \frac{y_0}{4} + \frac{\bar{t} - 1}{2}\,,$$

if $(x_0,y_0) \in D_R$. By symmetry we have

$$\bar{t}(x_0,y_0) = \bar{t}(-x_0,-y_0),\ \lambda(x_0,y_0) = \lambda(-x_0,-y_0)$$

if $(x_0,y_0) \in D_L$. The optimal effective control $\{\bar{v},\bar{t}\}$ for $(x_0,y_0) \in D_i$ is denoted by $\bar{v}_i$, $i = \pm 1, \pm 2, \ldots, \pm 5$. Evidently, $\bar{v}_i = -\bar{v}_{-i}$, $i = 1,2,\ldots,5$. The following formulas for $\bar{v}_i$ are obtained:

$$\bar{v}_1(t) = \begin{cases} -1\,, & 0 \leqq t < \lambda \\ +1\,, & \lambda \leqq t < \bar{t} - 1 \\ 0\,, & \bar{t} - 1 \leqq t < 1 \\ -1\,, & 1 \leqq t < \lambda + 1 \\ +1\,, & \lambda + 1 \leqq t \leqq \bar{t} \end{cases}$$

$$\bar{v}_2(t) = \begin{cases} -1\,, & 0 \leqq t < \lambda \\ +1\,, & \lambda \leqq t < 1 \\ 0\,, & 1 \leqq t < \bar{t} - 1 \\ -1\,, & \bar{t} - 1 \leqq t < \lambda + 1 \\ +1\,, & \lambda + 1 \leqq t \leqq \bar{t} \end{cases}$$

$$\bar{v}_3(t) = \begin{cases} -1\,, & 0 \leqq t < \lambda \\ +1\,, & \lambda \leqq t < 1 \\ 0\,, & 1 \leqq t < \lambda + 1 \\ +2\,, & \lambda + 1 \leqq t < \bar{t} - 1 \\ +1\,, & \bar{t} - 1 \leqq t \leqq \bar{t} \end{cases}$$

$$\bar{v}_4(t) = \begin{cases} -1\,, & 0 \leqq t < 1 \\ -2\,, & 1 \leqq t < \lambda \\ 0\,, & \lambda \leqq t < \bar{t} - 1 \\ -1\,, & \bar{t} - 1 \leqq t < \lambda + 1 \\ +1\,, & \lambda + 1 \leqq t \leqq \bar{t} \end{cases}$$

$$\bar{v}_5 = \begin{cases} -1\,, & 0 \leqq t < 1 \\ -2\,, & 1 \leqq t < \lambda \\ 0\,, & \lambda \leqq t < \lambda + 1 \\ +2\,, & \lambda + 1 \leqq t < \bar{t} - 1 \\ +1\,, & \bar{t} - 1 \leqq t \leqq \bar{t} \end{cases} .$$

Figure 8 shows some typical optimal trajectories for P_3^o with $(x_0,y_0) \in D_{\underset{-}{+}i}$, $i = 2,\ldots,5$. Figure 9 illustrates some additional curious phenomena for this problem.

Figure 8.

Figure 9.

For example if $(x_0,y_0) = (-2,2) \in D_1$, then the optimal trajectory to the origin is simply the arc p0 of the curve $x = -y^2/2$ connecting $(-2,2)$ to $(0,0)$ (Figure 9). However, a subarc pq

of arc $p0$ is contained in D_2. Thus if one starts at a point n on the subarc pq, then the optimal trajectory does not follows arc $n0$ to the origin, but will go off on a rather pathological trajectory (curve γ in Figure 9), finally coming to the origin on an arc $r0$ of the curve $x = y^2/2$. Figure 9 also depicts what can happen when $x_0 = \pm y_0^2/2$. For example, starting at point ℓ on $x = y^2/2$ the optimal trajectory is the curve σ. Note that σ in Figure 9 hits 0 at time $t = \frac{2}{3}$ bounces down and then swings back to hit the origin at time $\bar{t} = 2$. Other variations of this type of behavior can also occur because of the boundary conditions on the controls in P_3^0.

The next two examples demonstrate what can happen in problems which are not "normal" and where $\ker(B_0)$ and $\ker(B_1)$ are complementary spaces (see section 2). For these examples the attainable sets at time t can be determined without difficulty, enabling one to make a judicious choice (whenever there is more than one support hyperplane at the boundary point) of an outward normal for use directly in the maximum principle.

<u>Example 7.3</u>. This is an example of the form P_1. The system equations are

$$\dot{x} = u(t), \quad \dot{y} = u(t-1) \tag{7.8}$$

with boundary conditions the same as in equation (7.2). For system (7.8) the domain $\mathscr{D}_0^1$ of null controllability (here $U = [-1,1]$)

turns out to be

$$\mathscr{D}_0^1 = \{(x_0,y_0) \in R^2 \mid |x_0-y_0| \leqq 2\}.$$

Thus the problem P_1 has a solution only if $(x_0,y_0) \in \mathscr{D}_0^1$. On the other hand if $(x_0,y_0) \in \mathscr{D}_0^1$, then Theorem 5.2 assures us that problem P_1 has a solution. The attainable set at time t turns out to be $(x_0,y_0) + \mathscr{R}_1(t)$ which we denote by $\mathscr{A}_t(x_0,y_0)$ and this can be explicitly computed:

$$\mathscr{A}_t(x_0,y_0) = \{(x,y) \in R^2 \mid |x-x_0| \leqq t,\ |y-y_0| \leqq t,\ |x-y| \leqq 2\}.$$

Figure 10 shows $\mathscr{A}_{t_i}(x_0,y_0)$, $i = 1,2$, for $t_1 < 1 < t_2$.

Figure 10.

Taking advantage of the simple geometric structure of $\mathscr{R}_1(t)$ one finds that $\bar{t}(x_0,y_0) = \max\{|x_0|, |y_0|\}$, $(x_0,y_0) \in \mathscr{D}_0^1$. Thus an admissible control $\{\bar{u},\bar{t}\}$, $\bar{t} = \bar{t}(x_0,y_0)$ satisfying the boundary conditions (7.2) is a time optimal solution. The maximum principle for this problem says that if $\eta = (\eta^1,\eta^2) \neq 0$ is a vector which is

an outward normal to a support hyperplane for $\mathscr{A}_{\bar{t}}(x_0,y_0)$ passing through $(0,0)$ and if $\bar{t} < 1$, then

$$(7.9) \qquad \bar{u}(t) = \begin{cases} \operatorname{sgn}[\eta^2], & -1 \leq t \leq \bar{t} - 1 \\ \text{undetermined}, & \bar{t} - 1 < t < 0 \\ \operatorname{sgn}[\eta^1], & 0 \leq t \leq \bar{t} \end{cases}$$

and if $\bar{t} \geq 1$, then

$$(7.9') \qquad \bar{u}(t) = \begin{cases} \operatorname{sgn}[\eta^2], & -1 \leq t < 0 \\ \operatorname{sgn}[\eta^1+\eta^2], & 0 \leq t < \bar{t} - 1 \\ \operatorname{sgn}[\eta^1], & \bar{t} - 1 \leq t \leq \bar{t} \end{cases} .$$

Let us consider some of the possibilities. Suppose (x_0,y_0) is on the line $y = x - 2$ and $y_0 > -x_0$. Figure 11(a) shows how $\mathscr{A}_{\bar{t}}(x_0,y_0)$ is positioned at $(0,0)$ and we see that $\eta = (\eta^1,\eta^2)$ can be chosen so that $\eta^1 < 0 < \eta^2$ and $|\eta^1| > \eta^2$. Using this η in (7.9') one obtains

$$\bar{u}(t) = \begin{cases} +1, & -1 \leq t < 0 \\ -1, & 0 \leq t \leq \bar{t} \end{cases}$$

if $\bar{t} \geq 1$, with an obvious modification using (7.9) if $\bar{t} < 1$.

Figure 11.

If $(x_0,y_0) \in \mathscr{D}_0^1$ and $y_0 > -x_0$, $x_0 - 2 < y_0 < x_0$, $x_0 > 1$, then $\mathscr{A}_{\bar{t}}(x_0,y_0)$ is positioned at the origin as shown in Figure 11(b), where $\bar{t} = x_0 > 1$. Hence $\eta = (\eta^1,0)$, $\eta^1 < 0$ and (7.9') gives no information on the interval $[-1,0)$ but (7.9') does specify $\bar{u}(t) \equiv -1$, $0 \leq t \leq \bar{t}$. In this situation it turns out that any $\bar{u}$ such that $\{\bar{u},\bar{t}\}$ is admissible in P_1 satisfying $\bar{u}(t) \equiv -1$, $0 \leq t \leq \bar{t}$, and which drives (x_0,y_0) to (x_0-1,x_0-1) at time $t = 1$, turns out to be optimal. Let $(\bar{x},\bar{y})$ denote a response initiating at (x_0,y_0) to a control $\{\bar{u},\bar{t}\}$ of the above form. Then we see that $\bar{x}(t) = \bar{y}(t)$, $1 \leq t \leq \bar{t}$ and

$$|\dot{\bar{y}}(t)|/|\dot{\bar{x}}(t)| \leq 1 \tag{7.10}$$

for $0 \leq t \leq \bar{t}$. On the other hand if $y_0 > -x_0$, $x_0 - 2 < y_0 < x_0$, and $x_0 \leq 1 (\bar{t} \leq 1)$, then (7.10) is all that is required of the admissible trajectory $(\bar{x},\bar{y})$ as long as the boundary conditions (7.2) are satisfied.

Suppose now that $x_0 = y_0$ and $y_0 > 0$. Then we find that $\bar{t} = y_0$ and

$$\bar{u}(t) \equiv -1 \qquad -1 \leq t \leq \bar{t},$$

where $\{\bar{u},\bar{t}\}$ is the optimal control.

If $y_0 = -x_0$ and $y_0 < 0$, then the optimal control $\{\bar{u},\bar{t}\}$ is given by

$$\bar{u}(t) = \begin{cases} +1 & -1 \leq t \leq \bar{t} - 1 \\ -1 & 0 \leq t \leq \bar{t} \end{cases}$$

where $\bar{t} = |y_0| \leq 1$.

Using similar techniques one obtains optimal controls $\{\bar{u},\bar{t}\}$ for all (x_0,y_0) lying in $\mathscr{D}_0^1$ with $y_0 \geq -x_0$. By taking advantage of the symmetry with respect to the origin an optimal control can then be determined for (x_0,y_0) in the remainder of $\mathscr{D}_0^1$.

Figure 12 illustrates the typical situations. In this figure heavy lines indicate pieces of optimal trajectories when $\{\bar{u},\bar{t}\}$ is unique, and the broken lines indicate segments of optimal trajectories where the uniqueness of the optimal control does not obtain..

In this problem $\mathscr{R}_1(t)$ is increasing but not expanding.

Figure 12.

Example 7.4. In this example we look briefly at the same situation as in Example 7.3 except we change to a problem of type P_2 where $v_0 \equiv 0$. Now the domain of null controllability (with $U = [-1,1]$) is

$$\mathscr{D}_0^2(0) = \{(x_0,y_0) \in R^2 \mid |x_0-y_0| \leq 1\},$$

and the attainable set at time t which we again denote by $\mathscr{A}_t(x_0,y_0)$ is equal to $(x_0,y_0) + \mathscr{R}_2(t)$. It is easily shown that

$$\mathscr{A}_t(x_0,y_0) = \{(x,y) \in R^2 \mid |x-x_0| \leq t,\ |y-y_0| \leq t - 1,\ |x-y| \leq 1\}$$

for $t \geq 1$ and

$$\mathscr{A}_t(x_0,y_0) = \{(x,y) \in R^2 \mid |x-x_0| \leq t,\ y = y_0\}$$

for $0 < t < 1$. These sets are shown in Figure 13.

Figure 13.

Again, if one takes advantage of the simple geometry present in the problem, then the "minimum time" $\bar{t}$ is determined to be

$$\bar{t}(x_0,y_0) = \begin{cases} 1 + |y_0|, & (x_0,y_0) \in \mathscr{D}_0^2(0),\ y_0 \neq 0 \\ |x_0| \quad , & (x_0,y_0) \in \mathscr{D}_0^2(0),\ y_0 = 0, \end{cases}$$

which is discontinuous on $\mathscr{D}_0^2(0)$ at every point on the line $\{(x_0,y_0) \in R^2 \mid |x_0| < 1,\ y_0 = 0\}$. If $(x_0,y_0) \in \mathscr{D}_0^2(0)$, then an optimal control $\{\bar{u},\bar{t}\}$ exists for problem P_2 and $\bar{t} = \bar{t}(x_0,y_0)$ (Theorem 5.2). The necessary conditions for this example are the same as in Example 7.3 (equations (7.9) and (7.9')) except the condition on $\bar{u}(t)$, $-1 \leq t < 0$ is deleted. To solve this problem one considers (as in Example 7.3) the possible $\eta = (\eta^1,\eta^2)$ which are normal to support hyperplanes for $\mathscr{A}_{\bar{t}}(x_0,y_0)$ through $(0,0)$ and makes an appropriate choice when there is more than one candidate.

We now consider some of the cases. If $y_0 \geq 1$ (i.e., $\bar{t} \geq 2$), then (7.9') yields

$$(7.11) \qquad \bar{u}(t) = -1, \qquad 0 \leq t \leq \bar{t} - 1.$$

If in addition to $y_0 \geq 1$ we have $y_0 = x_0 - 1$, then $\bar{u}(t) = -1$, $0 \leq t \leq \bar{t}$ and the optimal control $\{\bar{u}, \bar{t}\}$ is unique. On the other hand if $y_0 \geq 1$ and $y_0 = x_0 + 1$, then in addition to (7.11) we find that $\bar{u}(t) = +1$, $\bar{t} - 1 < t \leq \bar{t}$, and again the optimal control $\{\bar{u}, \bar{t}\}$ is unique. Now if $y_0 \geq 1$ and $x_0 - 1 < y_0 < x_0 + 1$, then any admissible control $\bar{u}$ will be optimal as long as it satisfies (7.11) and is defined on $[\bar{t}-1, \bar{t}]$ so that the boundary conditions (7.2) are satisfied. The cases that we have just discussed are shown in Figure 14 (where again non-unique segments of optimal trajectories are denoted by broken lines) by the trajectories initiating at points p_1; p_2; and p_3, p_4, p_5 respectively. We note that in many cases the optimal trajectories contain subarcs which lie outside the domain of null controllability.

Figure 14.

If $y_0 = 0$, then one can show that

$$\bar{u}(t) \equiv -1, \quad 0 \leq t \leq \bar{t} \quad \text{if} \quad 1 \geq x_0 > 0$$

and

$$\bar{u}(t) \equiv +1, \quad 0 \leq t \leq \bar{t} \quad \text{if} \quad -1 \leq x_0 < 0,$$

so that the optimal control is also unique and the corresponding trajectories are very simple. Finally, we consider one other typical situation when optimal controls $\bar{u}$ are not unique. Suppose $0 < y_0 < 1$ and $x_0 - 1 < y_0 < x_0$. The necessary conditions still give (7.11), but in this case any admissible $\bar{u}$ satisfying (7.11) and the boundary conditions (7.2) at time $\bar{t} = 1 + y_0 < 2$ is optimal. For example the trajectory issuing from point p_2 in Figure 15 shows one of the many optimal trajectories starting at this point at time 0. This trajectory passes through q_2 at time $\bar{t} - 1$, arrives at r_2 at time 1, passes through s_2 at some time t, $1 < t < \bar{t}$, and finally arrives at 0 at time $\bar{t}$.

Other optimal trajectories are also illustrated in Figure 15. In this figure once again heavy lines denote pieces of optimal trajectories where the optimal control is unique, while along broken lines the optimal control is not unique.

In this example $\mathscr{R}_2(t)$ turns out to be increasing but not expanding.

Figure 15.

Finally, it is noted that if we consider system (7.8) with a problem of type P_3^0, then the domain of null controllability is merely the straight line $y = x$. This problem is easily solved and some optimal trajectories for this problem are depicted in Figure 16.

Figure 16.

8. Delayed Control Problems and Dynamic Programming

Consider once again Example 7.4 above. If we consider the optimal trajectory emanating from p_4 in Figure 14, we notice that this trajectory has subarcs which are not optimal. Thus the principle of optimality in its usual form [19] does not hold here. This is not too surprising since this principle fails even in ordinary control problems with time dependent restraint sets $U(t)$ if one interprets "state" to mean $x(t)$ instead of $(t,x(t))$ (cf. [16]). However, in the problems we are studying this difficulty is more serious.

We also observe that in Examples 7.1 and 7.2 the principle of optimality in its usual sense fails to be true. On the basis of this experience one expects the failure of this principle of optimality to be an intrinsic property of optimization problems involving systems of the form $\mathcal{S}_h(A,B_0,B_1)$ and not just a peculiar property redounding from the special boundary conditions in Examples 7.2 and 7.4 or the particular criterion for optimality. Hence one anticipates serious obstacles to obtaining results for problems involving $\mathcal{S}_h(A,B_0,B_1)$ using dynamic programming. Nonetheless, for certain special performance indices we are able to adapt the methods of dynamic programming to problems governed by systems $\mathcal{S}_h(A,B_0,B_1)$, even though it is easy to construct examples showing that the standard principle of optimality is also invalid for these problems.

The remarks below are valid for time varying systems even though

we shall, in keeping with our practice in this paper, restrict our presentation to the case of constant coefficients.

Let $\sigma: R^n \to R$ and $L: R \times R^m \to R$ be given C^2 functions. Suppose $U \subset R^m$ is given and $t_1 \in R$ is fixed. For $t_0 < t_1 - h$ we shall denote by Π the problem of minimizing

$$J(u; t_0, x_0) \equiv \sigma(x(t_1)) + \int_{t_0}^{t_1} L(t, u(t))dt$$

over the class of $\mathscr{S}^2$-admissible controls u where $x(\cdot; t_0, x_0, u)$ is the solution of $\mathscr{S}_h^2(A, B_0, B_1)$ (v_0 is a given fixed function throughout) subject to $x(t_0) = x_0$.

<u>Remark 8.1.</u> We shall consider only the free endpoint problem; problems with restricted endpoints $x(t_1) \in \Sigma \subset R^n$ require the usual modifications [3, 19].

An easy calculation shows that the response to $\mathscr{S}_h^2(A, B_0, B_1)$ satisfies

$$x(t_1; t_0, x_0, u) = \hat{x}(t_1; t_0, Tx_0, u)$$

whenever $t_0 \leq t_1 - h$, where $\hat{x}$ is the solution to

$$\dot{\hat{x}}(t) = A\hat{x}(t) + \Omega(t, t_1)u(t) \qquad t \in [t_0, t_1] \tag{8.1}$$

subject to $\hat{x}(t_0) = Tx_0$ with $Tx_0 \equiv x_0 + \int_{-h}^{0} e^{-(\xi+h)A} B_1 v_0(\xi)d\xi$ and

$$\Omega(t,t_1) \equiv \begin{cases} B_0 & t \in [t_1-h,t_1] \\ B_0 + e^{-hA}B_1 & t < t_1 - h \end{cases}$$

We shall denote by $\hat{\Pi}$ the problem of minimizing

$$\hat{J}(u;\ t_0,x_0) \equiv \sigma(\hat{x}(t_1)) + \int_{t_0}^{t_1} L(t,u(t))dt$$

over all bounded measurable controls $u: [t_0,t_1] \to U$ where $t_0 < t_1$ and $\hat{x}(\cdot;\ t_0,x_0,u)$ is the solution to (8.1) subject to $\hat{x}(t_0) = x_0$. Note that the payoff J ($\hat{J}$) depends only on $x(t_1)$ ($\hat{x}(t_1)$) and not on $x(t)$ ($\hat{x}(t)$) for $t < t_1$.

Since $J(u;\ t_0,x_0) = \hat{J}(u;\ t_0,Tx_0)$ for every $t_0 < t_1 - h$ and $x_0 \in R^n$, we see that the problems Π and $\hat{\Pi}$ are equivalent whenever $t_0 \leq t_1 - h$. That is, if, for given initial data (t_0,x_0) with $t_0 \leq t_1 - h$, $\bar{u}$ is optimal for $\hat{\Pi}$, then $\bar{u}$, extended to $[t_0-h,t_1]$ by taking $\bar{u}_{t_0} = v_0$, is optimal for Π with initial data $(t_0,T^{-1}x_0)$. Conversely, if $\bar{u}$ is optimal for Π with initial data (t_0,x_0), $t_0 \leq t_1 - h$, then $\bar{u}$ restricted to $[t_0,t_1]$ is optimal for $\hat{\Pi}$ with initial data (t_0,Tx_0).

Applying the methods of dynamic programming to the problem $\hat{\Pi}$ we obtain the Hamilton-Jacobi equation [3, 19]

$$\hat{\Phi}_t(t,z) + \min_{w\in U} \{L(t,w) + \hat{\Phi}_z(t,z)f(t,z,w)\} = 0 \tag{8.2}$$

for $t < t_1$ and $z \in R^n$, where $\hat{\Phi}(t,z) = \inf_u \hat{J}(u;\, t,z)$ and $f(t,z,w) = Az + \Omega(t,t_1)w$. Solving (8.2) with data $\hat{\Phi}(t_1,z) = \sigma(z)$, one obtains $\hat{\Phi}(t_0,x_0)$ for $t_0 < t_1, x_0 \in R^n$. Since for $t_0 \leq t_1 - h$ we have $\Phi(t_0,x_0) = \hat{\Phi}(t_0,Tx_0)$, where $\Phi(t,z) = \inf_u J(u;\, t,z)$, one thus has the optimal payoff for problem Π. It should be noted that although (8.2) is valid for $t < t_1$, one has $\Phi(t,z) = \hat{\Phi}(t,Tz)$ only for $t \leq t_1 - h$. In case $v_0 \equiv 0$, one has $Tz = z$ and $\Phi(t,z) = \hat{\Phi}(t,z)$ for all $t < t_1$.

Let us now consider a special case of the problems $\Pi, \hat{\Pi}$ for which (8.2) can be solved using known techniques. Denote by Π_q and $\hat{\Pi}_q$ respectively the problems Π and $\hat{\Pi}$ for quadratic payoffs $\sigma(x) = xSx$, $L(s,u) = uR(s)u$ where $U \equiv R^m$. We assume that $S \in \mathcal{L}_{nn}$ is symmetric positive semi-definite and $R(s) \in \mathcal{L}_{mm}$ is symmetric positive definite for $s \in R$. Application of known results to the problem $\hat{\Pi}_q$ yields the optimal (feedback) control

$$(8.3) \qquad \bar{u}(t) = -R^{-1}(t)\Omega^*(t,t_1)G(t)\hat{x}(t)$$

for $t \in [t_0,t_1]$ where G satisfies the matrix Riccati equation

$$(8.4) \qquad \mathring{G}(t) + G(t)A + A^*G(t) - G(t)\Omega(t,t_1)R^{-1}(t)\Omega^*(t,t_1)G(t) = 0$$

for $t \in [t_0,t_1]$ with boundary condition $G(t_1) = S$. Note that (8.3) gives a feedback solution for the problem $\hat{\Pi}_q$ which can be used to solve the problem Π_q in the following manner. Given

(t_0,x_0), $t_0 \leq t_1 - h$, as initial data for the problem Π_q one solves the problem $\hat{\Pi}_q$ with initial data (t_0,Tx_0), obtaining a feedback of the form (8.3). Next one uses this in (8.1) to find the optimal $\hat{x}$; i.e., one solves

$$(8.5) \qquad \mathring{\hat{x}}(t) = \{A-\Omega(t,t_1)R^{-1}(t)\Omega^*(t,t_1)G(t)\}\hat{x}(t)$$

for $t \in [t_0,t_1]$ with data $\hat{x}(t_0) = Tx_0$. Using this together with (8.3) gives the optimal open loop control for Π_q.
This control can then be used in $\mathscr{S}_h^2(A,B_0,B_1)$ with $x(t_0) = x_0$ and $u_{t_0} = v_0$ to find the optimal trajectory for problem Π_q. This latter step is not necessary to find the optimal value of the payoff for Π_q, since knowledge of $\hat{x}$ and $\bar{u}$ yields $J(\bar{u};\ t_0,x_0)$ at once from

$$J(\bar{u};\ t_0,x_0) = \hat{J}(\bar{u};\ t_0,Tx_0) = \hat{x}(t_1)S\hat{x}(t_1) + \int_{t_0}^{t_1} \bar{u}(t)R(t)\bar{u}(t)dt.$$

We note that in (8.1) and the performance index $\hat{J}(u;\ t_0,x_0)$ we could make the change of variable $\hat{y} = e^{-At}\hat{x}$, and then system (8.1) takes the form $\mathring{\hat{y}} = \tilde{\Omega}(t,t_1)u(t)$. If one carries out these substitutions, then the corresponding Riccati equation will have the simple form $\mathring{G} - GC(t,t_1)G = 0$ which can often be solved by a quadrature (see [25, p. 227]).

<u>Remark 8.2.</u> It is not difficult to give a rigorous derivation

(including existence of the required solution to the Riccati equation (8.4) on the entire interval $[t_0, t_1]$) of the above solution to the problem Π_q using the maximum principle for $\hat{\Pi}_q$ and arguments similar to those by Lee and Markus [19, sections 3.2 and 3.3].

Remark 8.3. The above ideas can be applied to certain optimal control problems where retardations occur in both the state and control variables. For the corresponding quadratic payoff problem Π_q, one can then use recent extensions of the Riccati theory [1, 8, 15, 17, 27].

References

[1] Y. Alekal, Synthesis of feedback controllers for systems with time-delay, Ph.D. thesis, University of Minnesota, 1969.

[2] H. T. Banks and M. Q. Jacobs, The optimization of trajectories of linear functional differential equations, SIAM Journal on Control, 8(1970).

[3] L. D. Berkovitz, Variational methods in problems of control and programming, J. Math. Anal. Appl., 3(1961), 145-169.

[4] J. J. Budelis and A. E. Bryson, Jr., Some optimal control results for differential-difference systems, IEEE Trans. Automatic Control, AC-15(1970), 237-241.

[5] D. H. Chyung, On the controllability of linear systems with delay in control, IEEE Trans. Automatic Control, AC-15(1970), 255-257.

[6] D. H. Chyung and E. B. Lee, Delayed action control problems, Proc. 4th IFAC Conf., Warsaw, 1969.

[7] K. S. Day and T. C. Hsai, Optimal control of linear time-lag systems, Proc. JACC (Ann Arbor, Mich., 1968), American Society of Mechanical Engineers, New York, 1968, 1046-1055.

[8] D. H. Eller, J. K. Aggarwal, and H. T. Banks, Optimal control of linear time-delay systems, IEEE Trans. Automatic Control, AC-14(1969), 678-687.

[9] R. E. Foerster, Control of linear systems with large time delays in the control, Dept. Aeronautics and Astronautics Report No. 376, Stanford University, 1969.

[10] A. T. Fuller, Optimal nonlinear control of systems with pure delay, Int. J. Control, 8(1968), 145-168.

[11] H. Hermes and J. P. LaSalle, Functional Analysis and Time Optimal Control, Academic Press, New York, 1969.

[12] K. Ichikawa, Pontryagin's maximum principle in optimizing time-delay systems, Electrical Engineering in Japan, 87(1967), 75-83.

[13] R. E. Kalman, Contributions to the theory of optimal control, Bol. Soc. Mat. Mexicana, 5(1960), 102-119.

[14] G. A. Kent, Optimal control of functional differential equations of neutral type, Ph.D. thesis, Brown University, 1971.

[15] H. J. Kushner and D. I. Barnea, On the control of a linear functional-differential equation with quadratic cost, SIAM J. Control, 8(1970), 257-272.

[16] M. R. Latina, Some aspects of mathematical control problems with time-dependent control constraints, M. S. thesis, Brown University, 1970.

[17] E. B. Lee, Optimal control of systems with time delays, Proc. JACC (Boulder, Col., 1969) American Society of Mechanical Engineers, New York, 451-452.

[18] Y. C. Lee, M. R. Gore, and C. C. Ross, Stability and control of liquid propellant rocket systems, American Rocket Society Journal, 23(1953), 75-81.

[19] E. B. Lee and L. Markus, Foundations of Optimal Control Theory, John Wiley, New York, 1967.

[20] E. J. McShane, Integration, Princeton University Press, Princeton, 1944.

[21] L. W. Neustadt, Synthesizing time optimal control systems, J. Math. Anal. Appl., 1(1960), 484-493.

[22] L. S. Pontryagin, V. G. Boltyanskii, R. V. Gamkrelidze and E. F. Mishchenko, The Mathematical Theory of Optimal Processes, Interscience, New York, 1962.

[23] B. C. Ragg and C. A. Stapleton, Time optimal control of second-order systems with transport lag, Int. J. Control, 9(1969), 243-257.

[24] W. H. Ray and M. A. Soliman, The optimal control of processes containing pure time delays, Proc. JACC (Atlanta, Ga., 1970) American Society of Mechanical Engineers, New York, 1970, 476-484.

[25] W. T. Reid, Solutions of a Riccati matrix differential equation as functions of initial values, J. Math. Mech., 8(1959), 221-230.

[26] R. W. Rishel, private communication.

[27] D. W. Ross and I. Flugge-Lotz, An optimal control problem for systems with differential-difference equation dynamics, SIAM J. Control, 7(1969), 609-623.

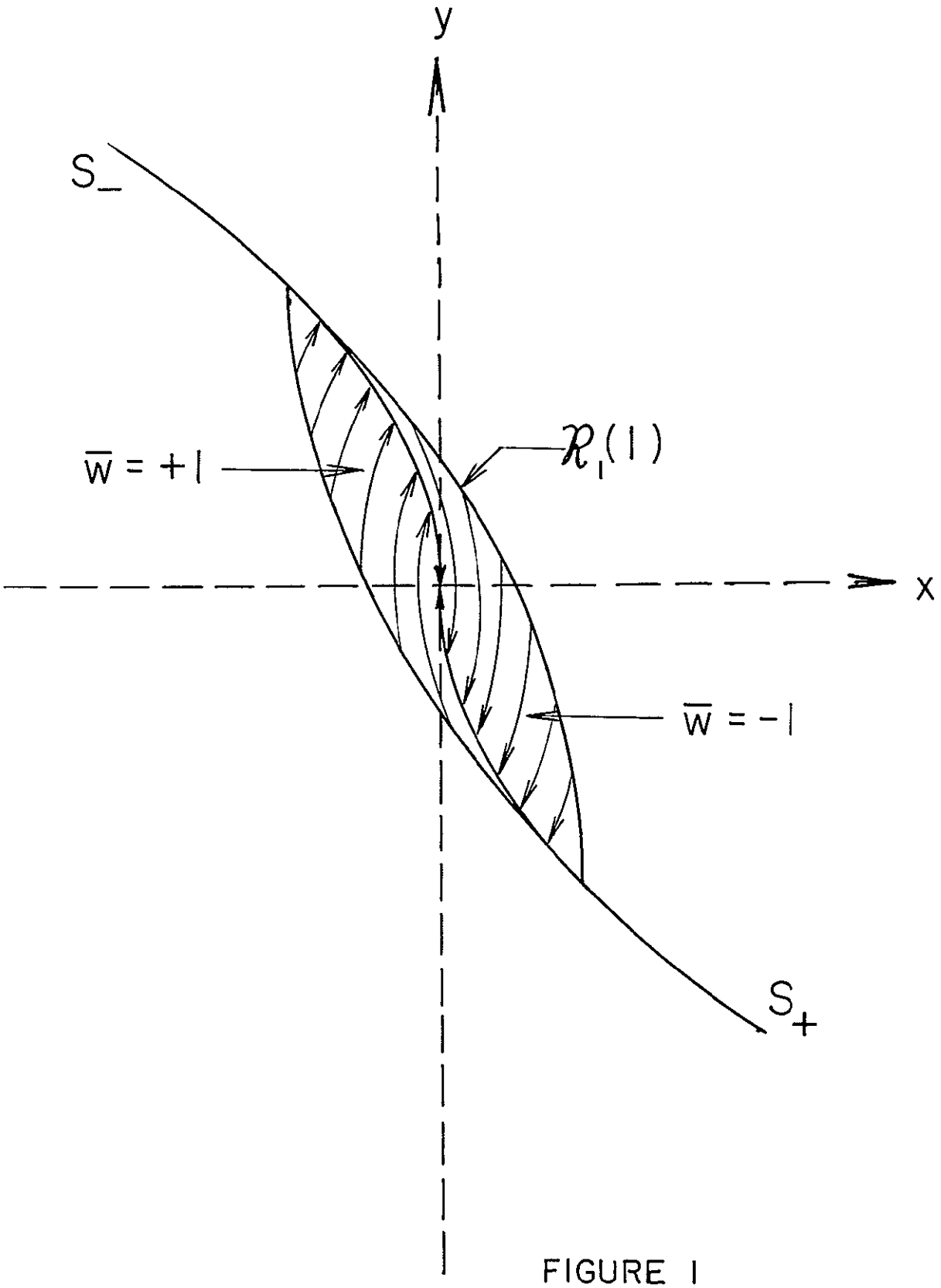

FIGURE 1

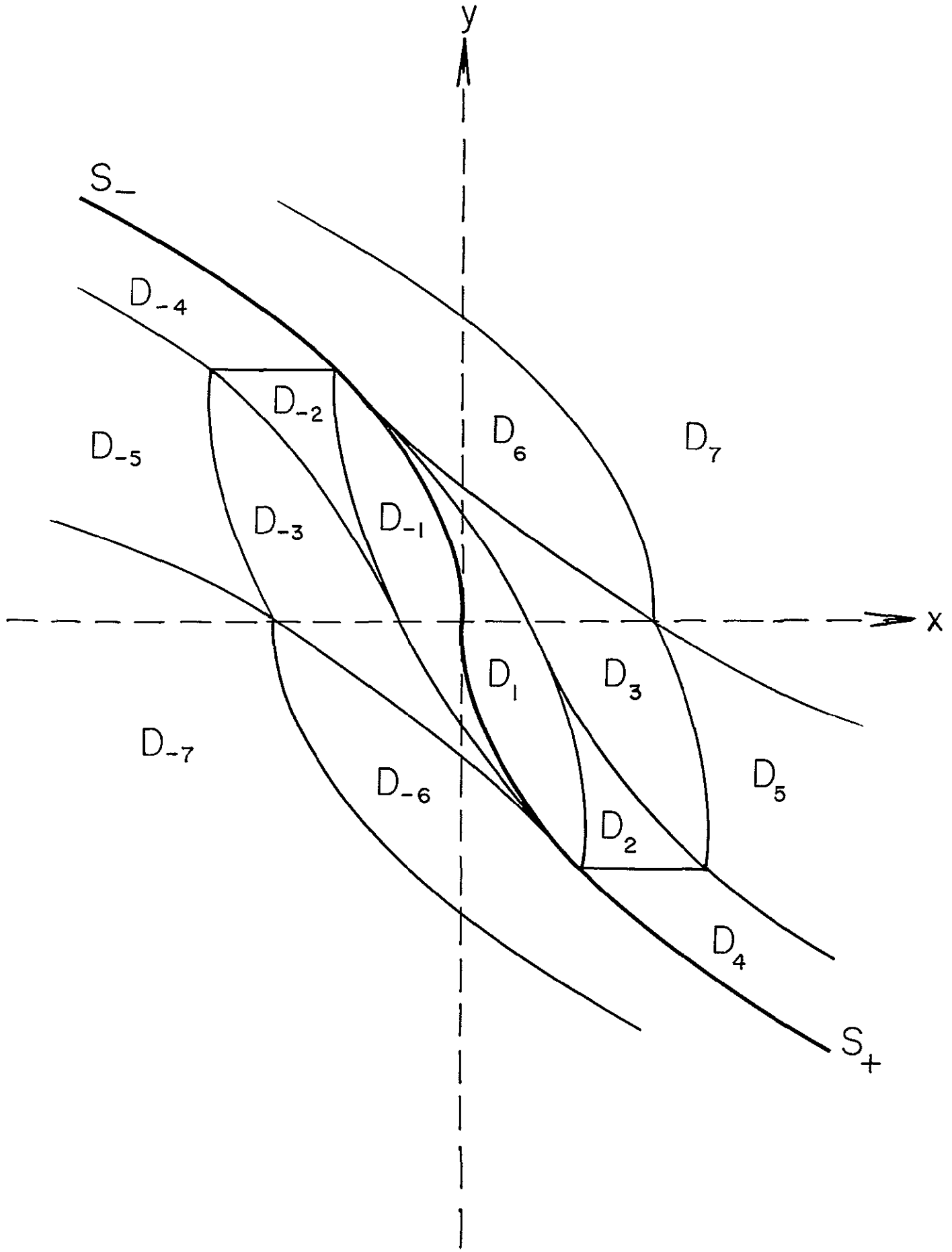

FIGURE 2

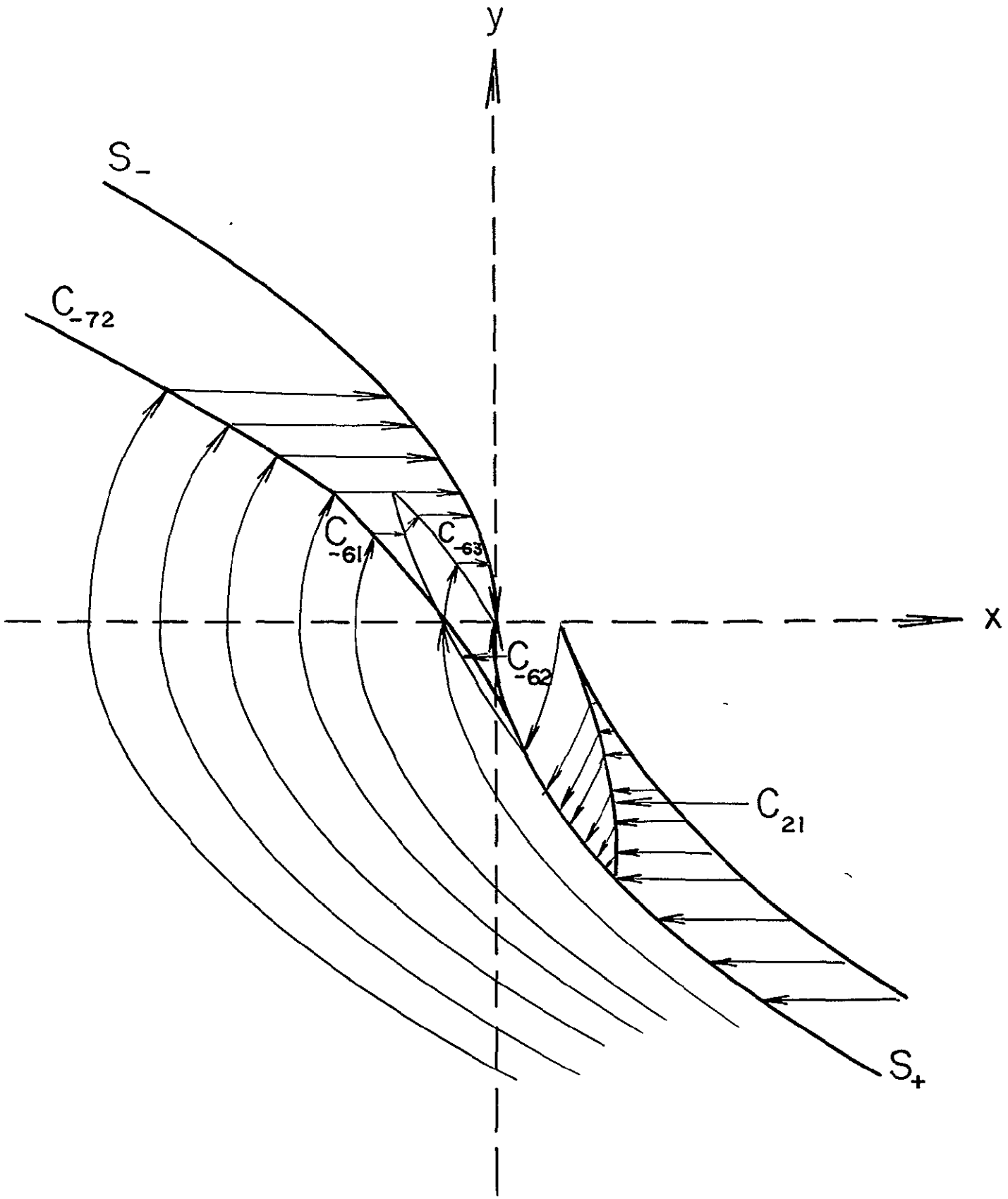

FIGURE 3

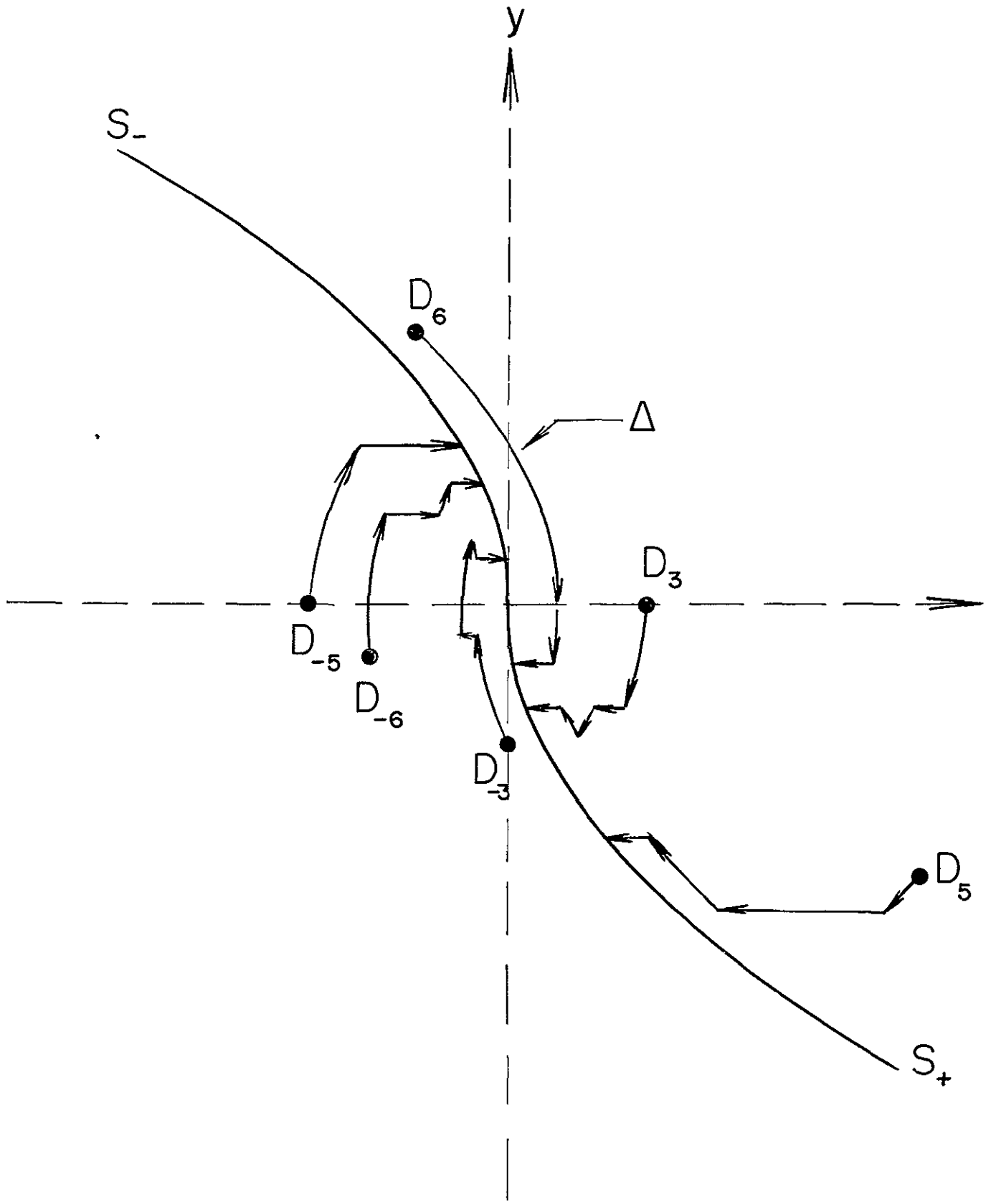

FIGURE 4

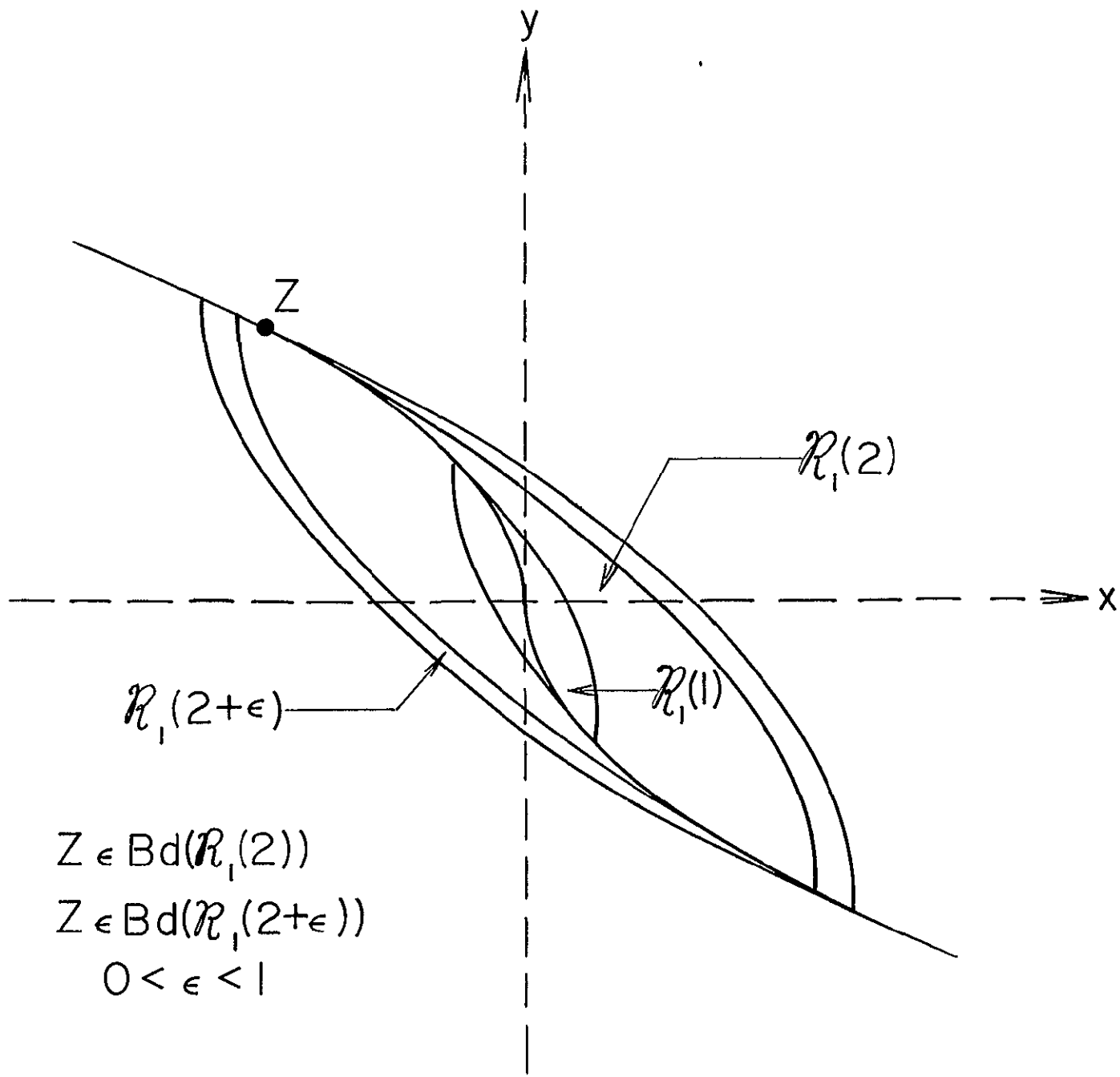
y
x
Z
$\mathcal{R}_1(2)$
$\mathcal{R}_1(1)$
$\mathcal{R}_1(2+\epsilon)$
$Z \in Bd(\mathcal{R}_1(2))$
$Z \in Bd(\mathcal{R}_1(2+\epsilon))$
$0 < \epsilon < 1$

FIGURE 5

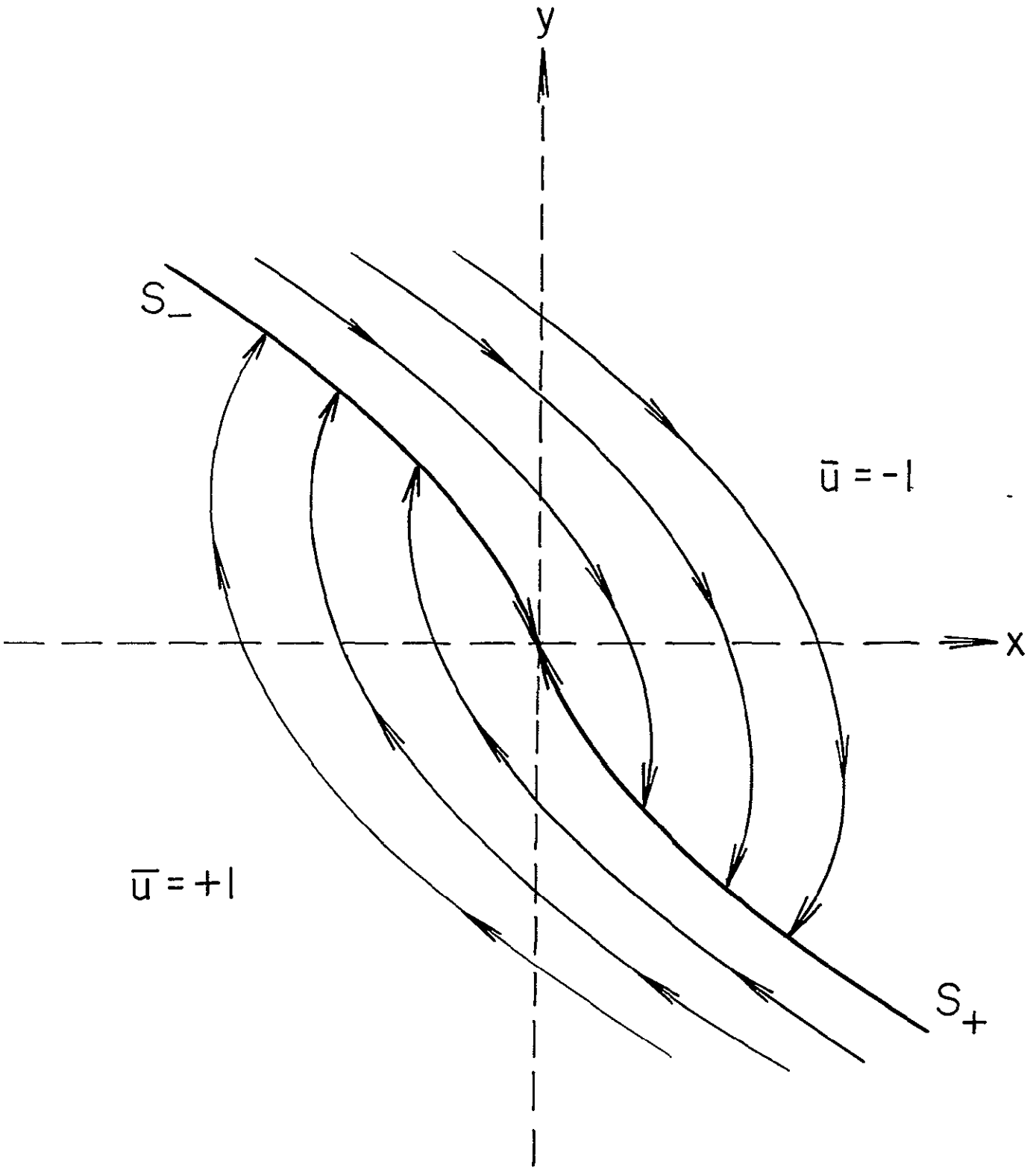

FIGURE 6

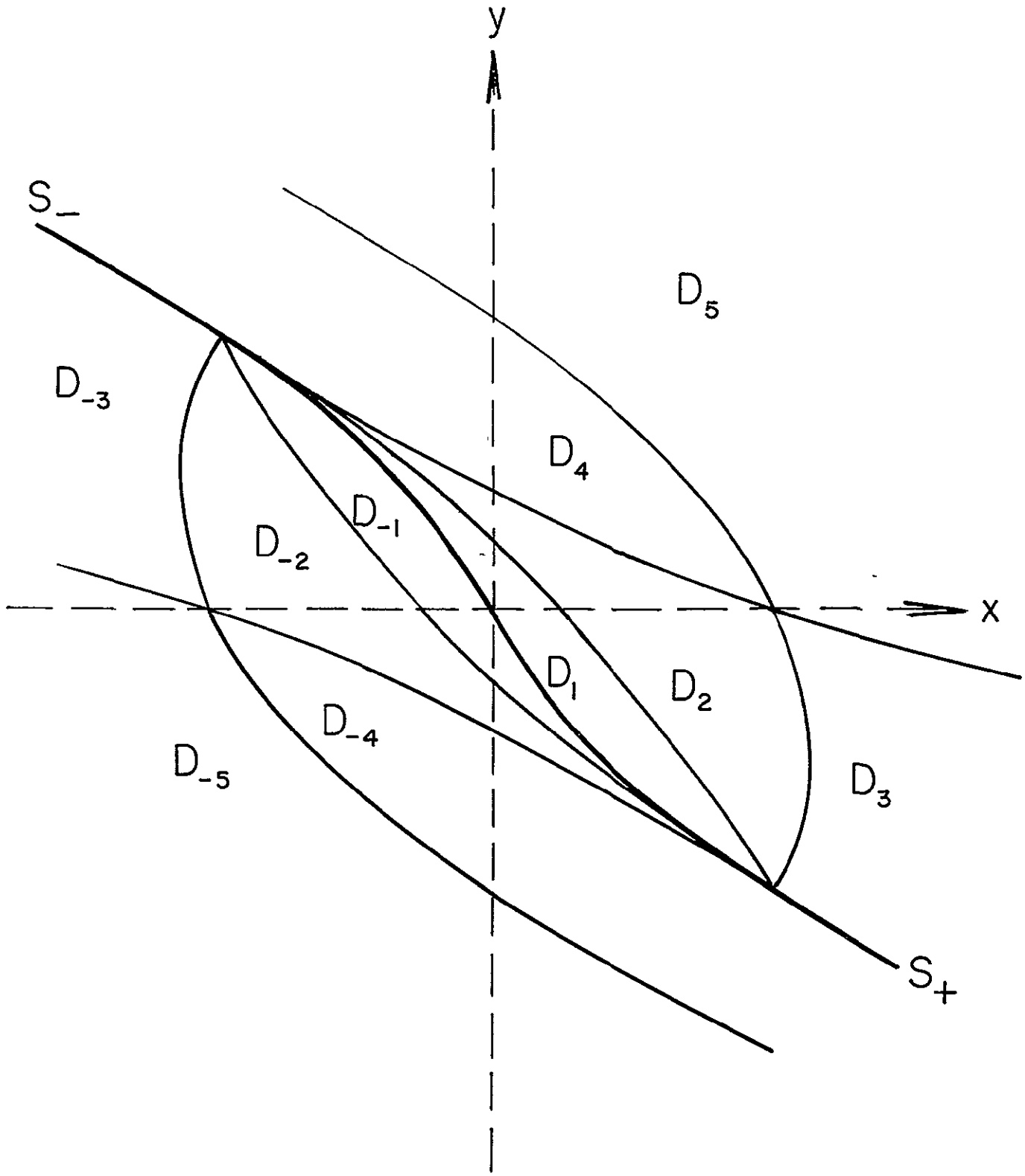

FIGURE 7

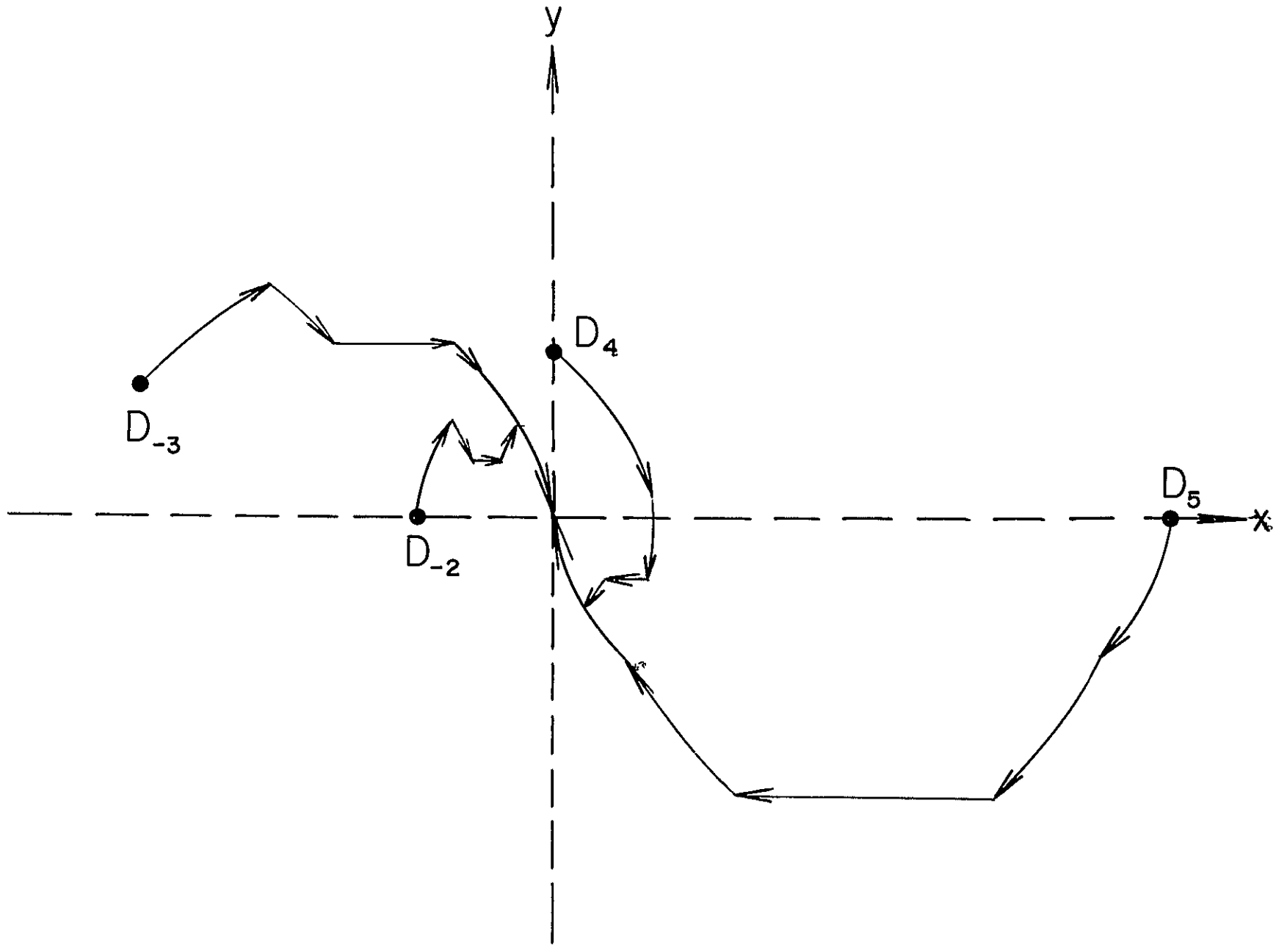

FIGURE 8

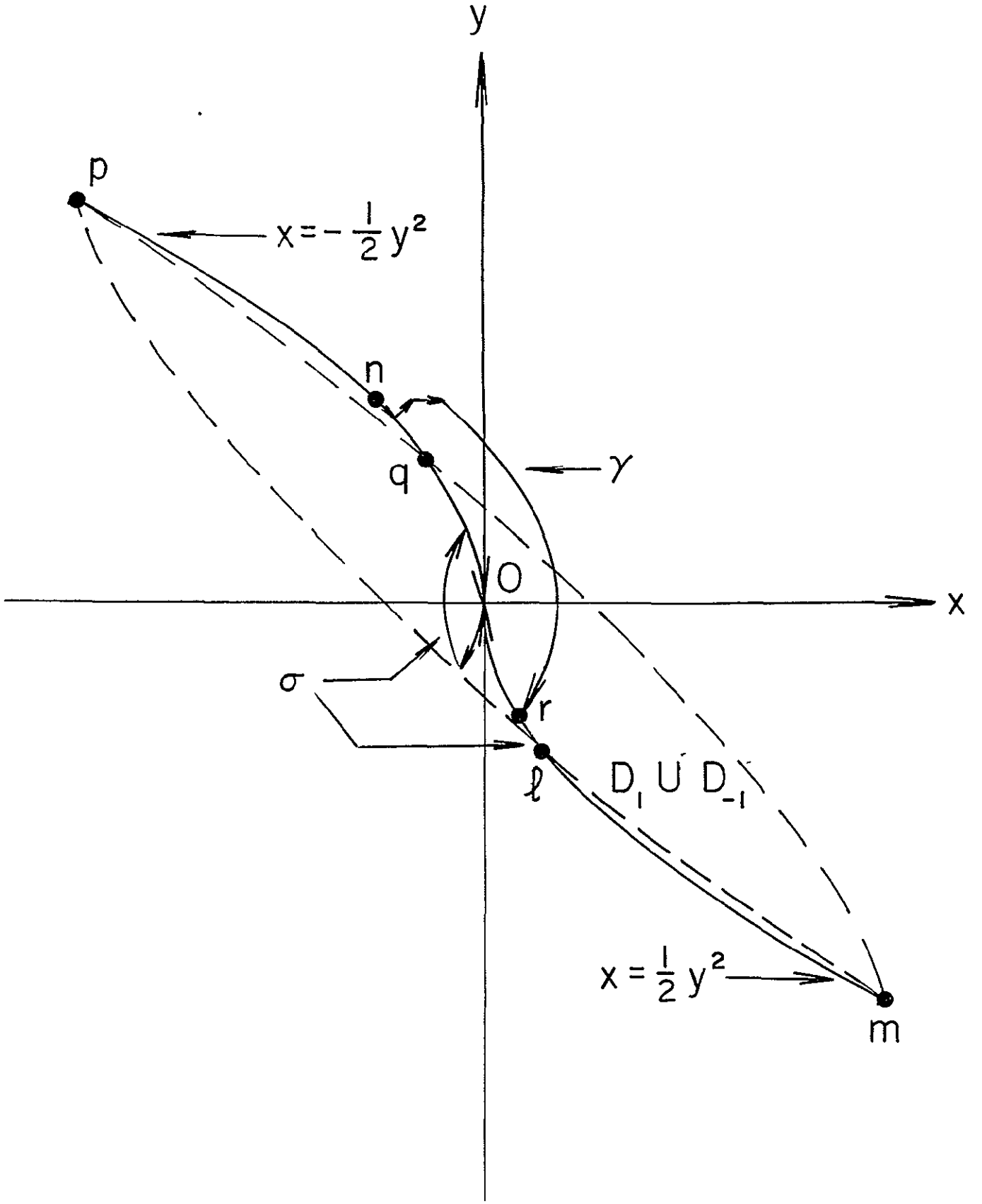

FIGURE 9

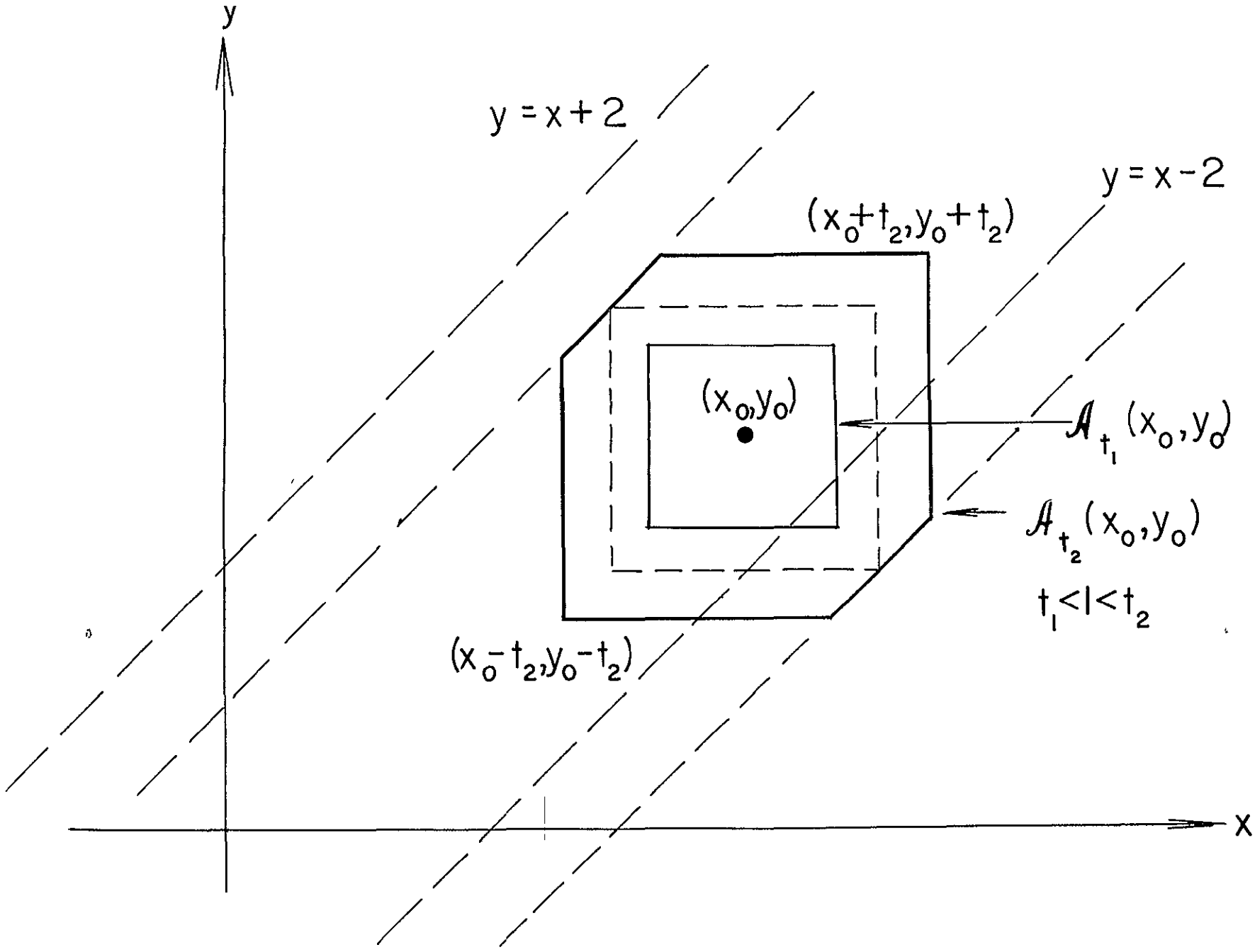
y
y = x + 2
y = x - 2
(x_0+t_2, y_0+t_2)
(x_0, y_0)
$\mathcal{A}_{t_1}(x_0, y_0)$
$\mathcal{A}_{t_2}(x_0, y_0)$
$t_1 < 1 < t_2$
(x_0-t_2, y_0-t_2)
x

FIGURE 10

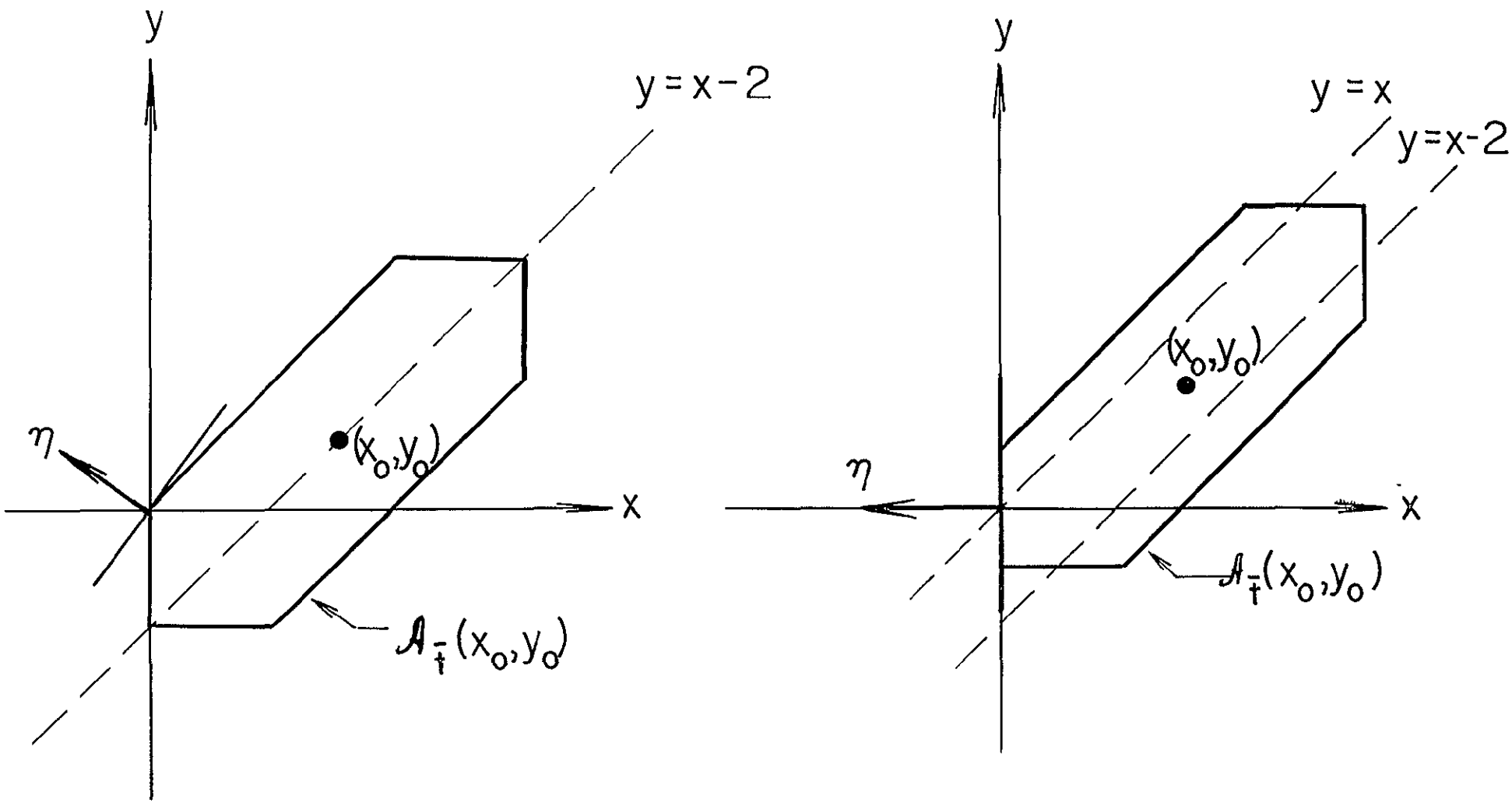

FIGURE II

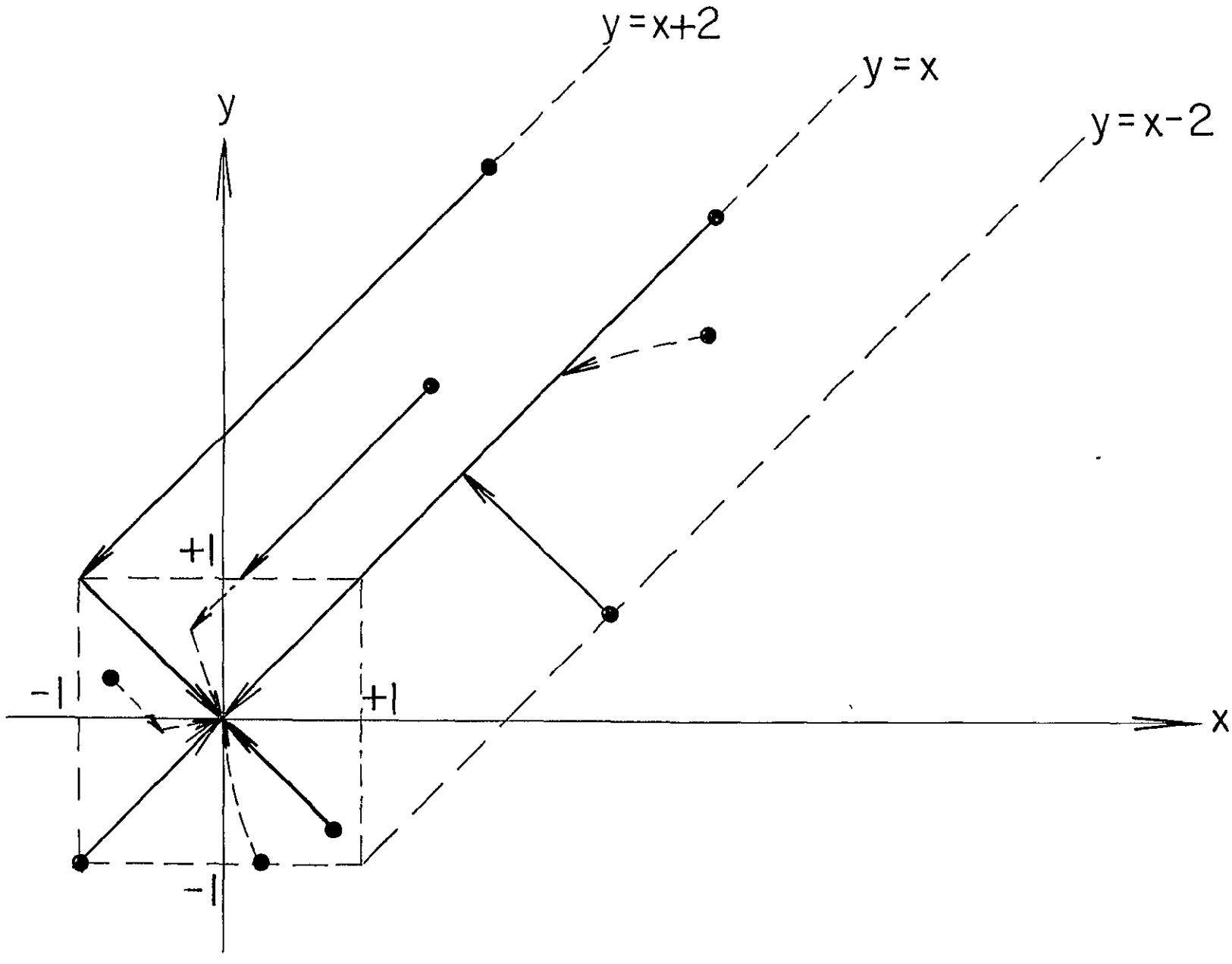

FIGURE 12

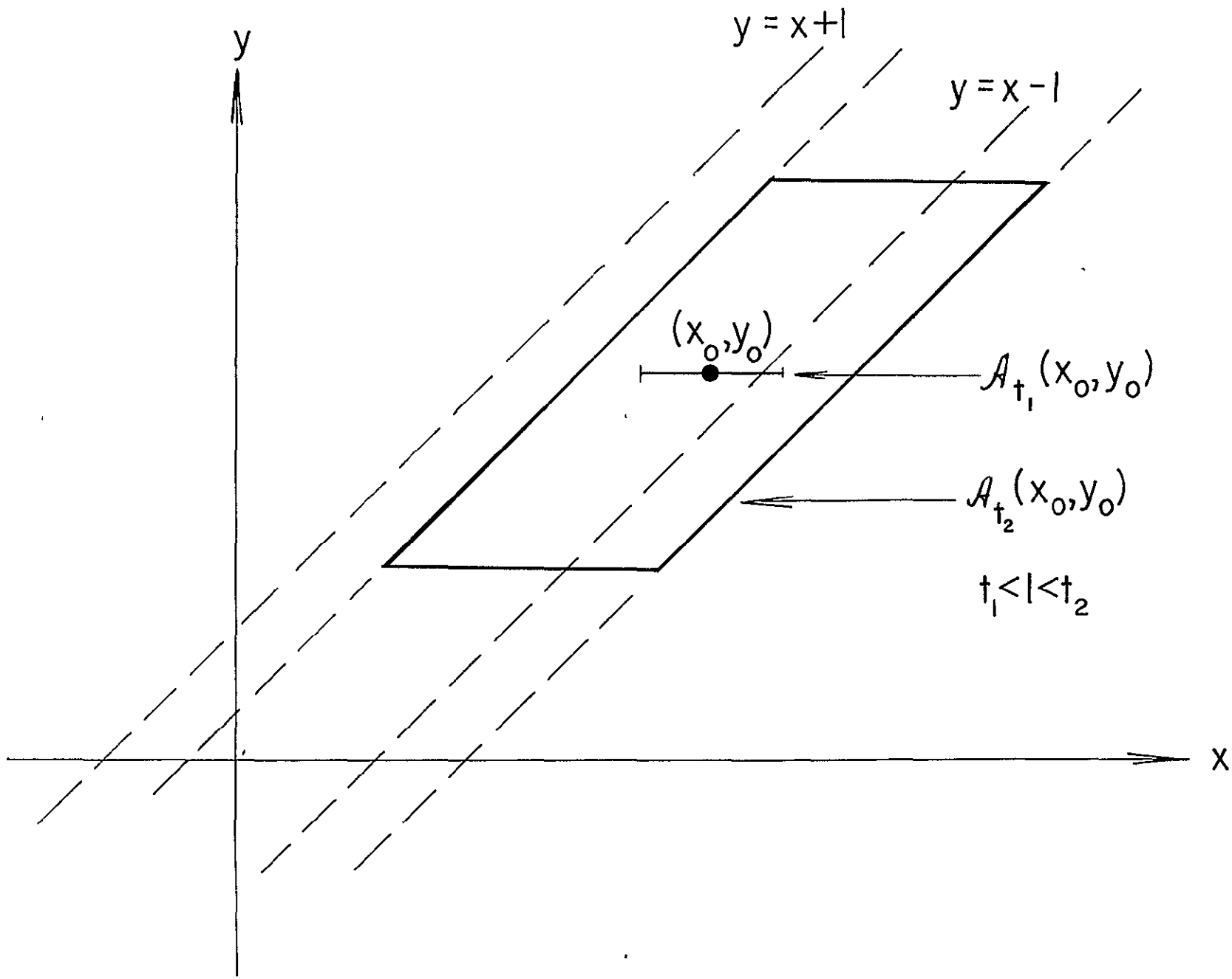

FIGURE 13

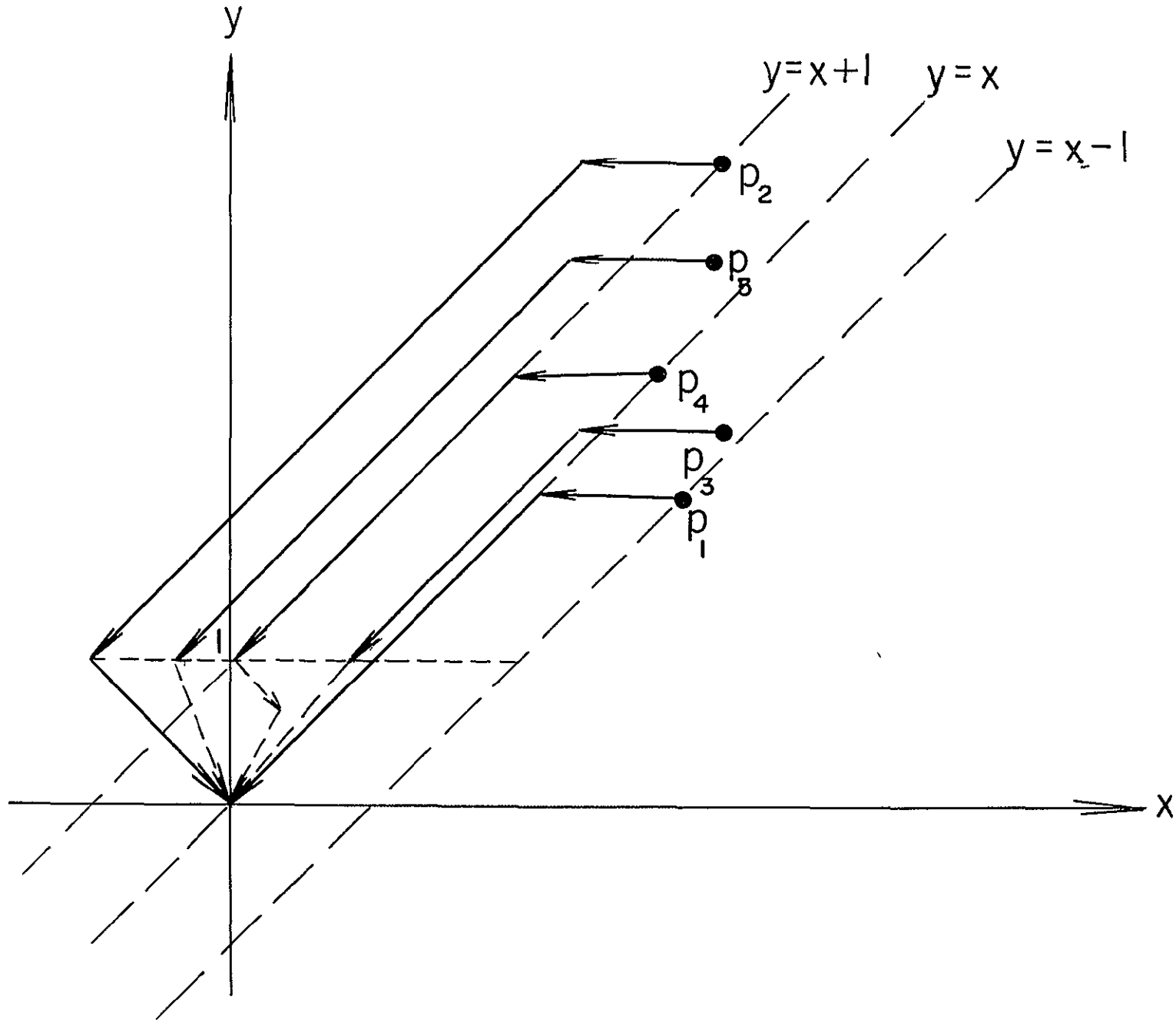

FIGURE 14

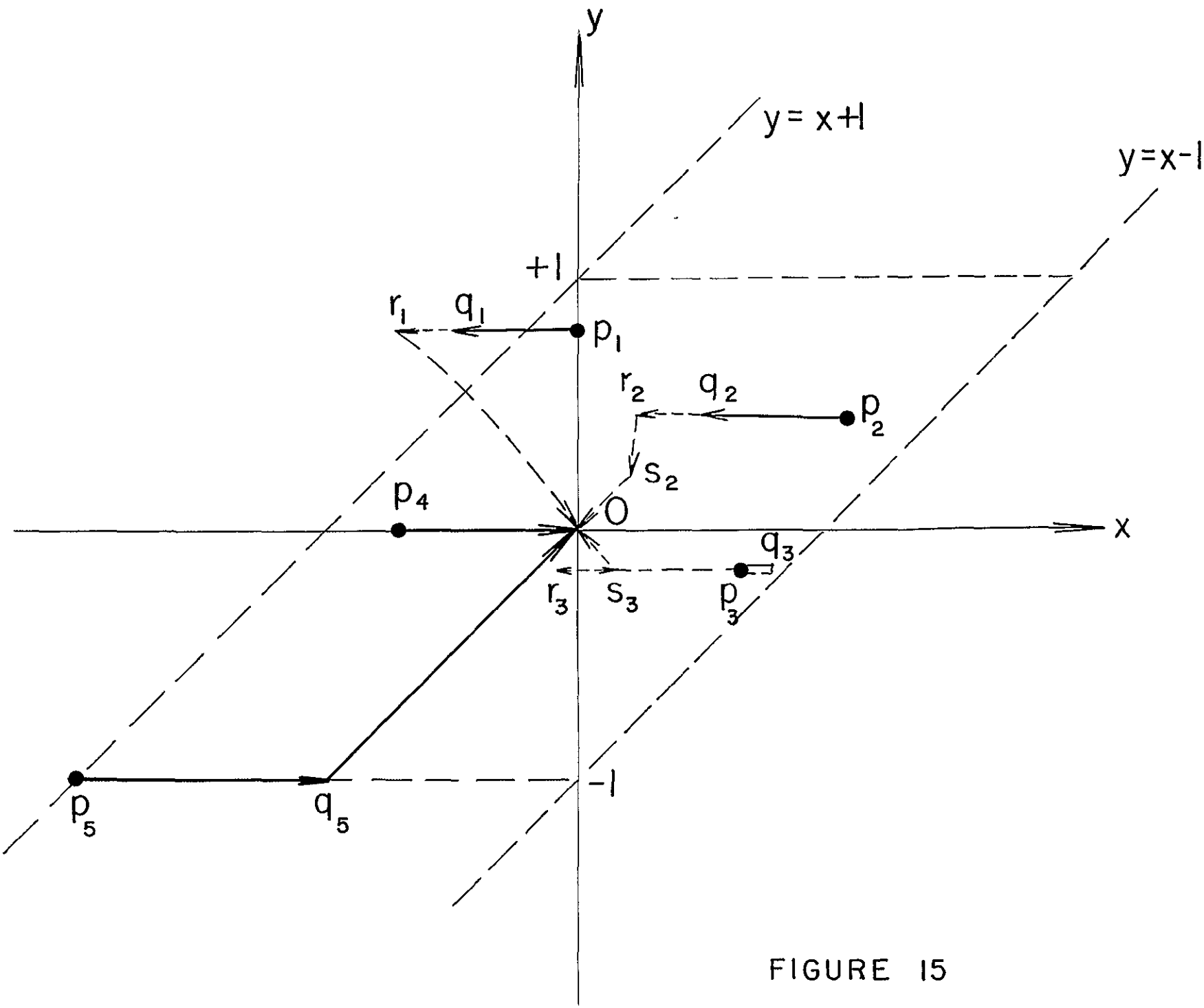

FIGURE 15

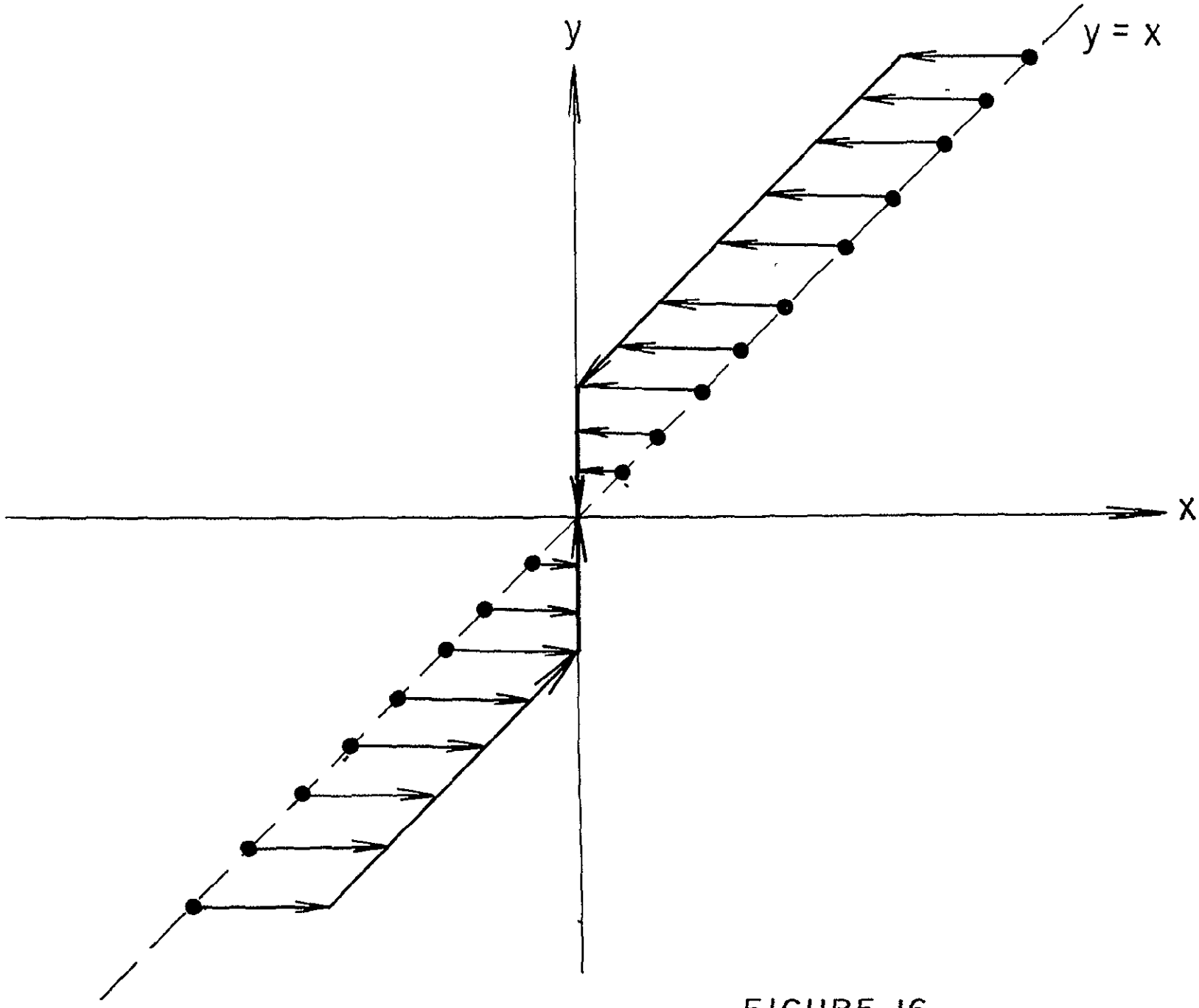
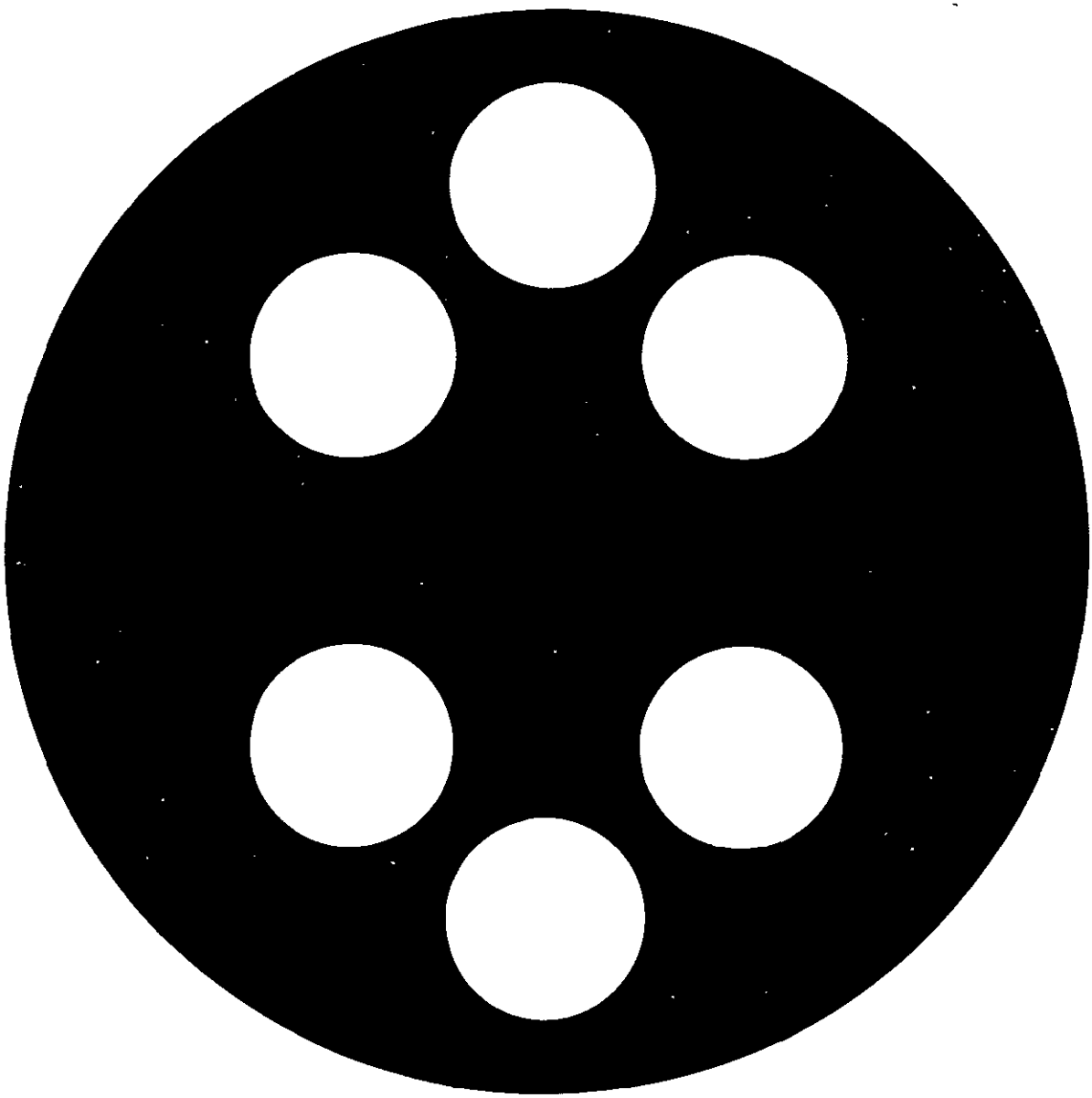
FIGURE 16