NASA TECH BRIEF

Manned Spacecraft Center

NASA Tech Briefs announce new technology derived from the U.S. space program. They are issued to encourage commercial application. Tech Briefs are available on a subscription basis from the National Technical Information Service, Springfield, Virginia 22151. Requests for individual copies or questions relating to the Tech Brief program may be directed to the Technology Utilization Office, NASA, Code KT, Washington, D.C. 20546.

Digital Parallel-to-Series Pulse-Train Converter

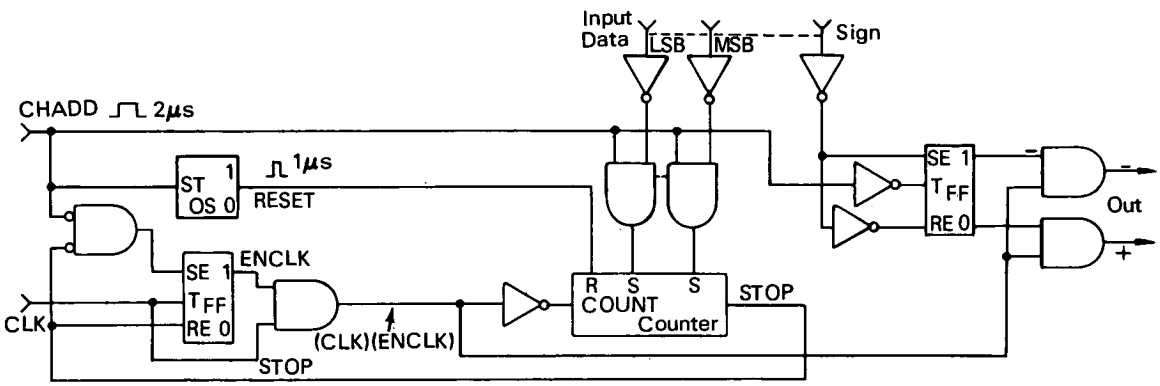

Figure 1

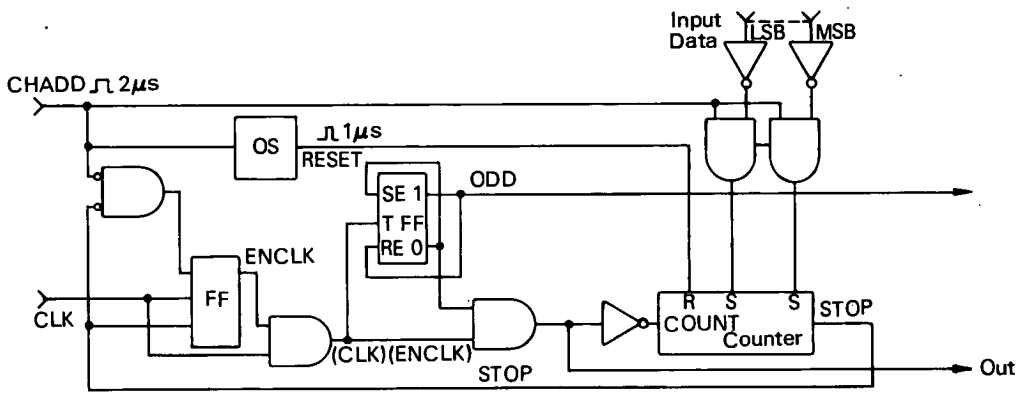

Figure 2.

A new digital logic circuit can convert a number represented as a two-level signal on n-bit lines (parallel binary) to a series of pulses on one of two lines, depending on the sign of the number. This parallel-to-series pulse-train converter accepts parallel binary input data and produces a number of output pulses equal to the number represented by the input data.

Circuits 1 and 2 (see Fig.'s 1 and 2) are two versions of the converter. Each version contains a binary counter, input-data sampling gates, address one-shot, stop logic, and clock enable logic. Circuit 1 also contains a sign flip-flop, and circuit 2 includes both a sign flip-flop and a toggle flip-flop. The toggle flip-flop logic reduces the clock frequency by one-half.

Data are loaded into the counter and the sign flip-flop from a common data bus, using a 2 μs channel

(continued overleaf)

This document was prepared under the sponsorship of the National Aeronautics and Space Administration. Neither the United States Government nor any person acting on behalf of the United States Government assumes any liability resulting from the use of the information contained in this document, or warrants that such use will be free from privately owned rights.

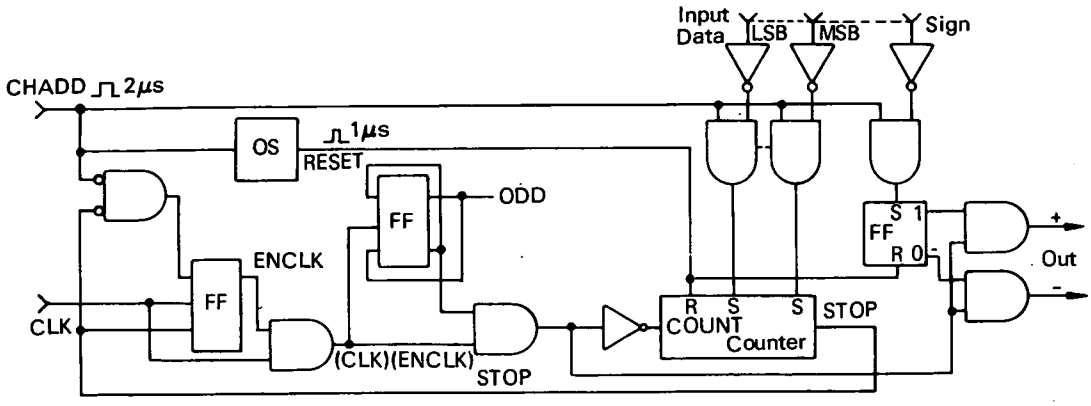

Figure 3

address (CHADD) pulse. The leading edge of the CHADD pulse initiates a 1 μs RESET pulse which forces all flip-flops in the counter to reset. The trailing edge of the 2 μs CHADD pulse then loads the "one's" complement of the input-data magnitude into the counter by sampling the inverted input data. The trailing edge of the CHADD pulse also loads the input-data sign bit into the sign flip-flop. Therefore, for any input data other than an "all zeros," the STOP level goes false after the data are loaded.

The counter advances with the trailing edge of each output pulse until the STOP level goes true. The next CLK pulse resets the ENCLK flip-flop, inhibiting any further CLK pulses from appearing at the output.

If only the magnitude of the number is required, one output line is sufficient (see Fig. 3). If sign as well as magnitude is required, the sign logic of either circuit 1 or cirtuit 2 may be added to direct a signal to the appropriate (plus or minus) output line.

Note:

No additional documentation is available. Specific questions, however, may be directed to:

Technology Utilization Officer
Code JM7
Manned Spacecraft Center
Houston, Texas 77058
Reference: B71-10450

Patent status:

No patent action is contemplated by NASA.

Source: J. Hussey of
Grumman Aerospace Corp.
under contract to
Manned Spacecraft Center
(MSC-12417)