NATIONAL AERONAUTICS AND SPACE ADMINISTRATION

MSC APOLLO 13 INVESTIGATION TEAM

FINAL REPORT

PANEL 6

Get DRAFT

RELATED SYSTEMS EVALUATION

VOLUME I
SUMMARY

FACILITY FORM 602

N71-19953
(ACCESSION NUMBER)

29
(PAGES)

TMX 66928
(NASA CR OR TMX OR AD NUMBER)

(THRU)

G3
(CODE)

37
(CATEGORY)

MAY 1970

RECEIVED
NASA STI FACILITY
INPUT BRANCH
FEB 1971

MANNED SPACECRAFT CENTER
HOUSTON, TEXAS

MSC APOLLO 13 INVESTIGATION TEAM

FINAL REPORT

PANEL 6

RELATED SYSTEMS EVALUATION

May 27, 1970

Calvin H. Perrine
Chairman, Panel 6

MSC APOLLO 13 INVESTIGATION TEAM
FINAL REPORT

PANEL 6
RELATED SYSTEMS EVALUATION

Volume I

Summery

PANEL 6

Related Systems Evaluation

The purpose of the investigation by Panel 6 was to reevaluate the Apollo system design in light of the failure of the CSM cryogenic oxygen tank which caused the abort of the Apollo 13 mission.

Figure 1 outlines the maximum scope of the related systems evaluation that was considered as a result of the Apollo 13 incident. Consideration was limited to gaseous and liquid subsystems. Subsystems hardware is divided into six categories at the top of the matrix. Potential causes of failure and their consequences are listed vertically along the left side of the matrix. The rationale used in reducing the scope of the Panel 6 investigation to a more manageable size was:

1. The Apollo 13 incident was apparently an electrically induced failure in an oxygen tank. Therefore, emphasis should be placed on:

a. Oxygen and oxidizer systems

b. Electrically induced modes of failure

2. Subsystem fluid lines and line components without electrical interfaces were not included because:

a. The probability of finding design deficiencies in these portions of the subsystems seemed very low in view of the ground and flight test experience to date.

b. These types of components and their failure modes are not related to the Apollo 13 incident.

c. The quantity of lines and components is so large that the effort required to evaluate these lines and components would reduce significantly the effort available for the Apollo 13 related systems investigations.

Note that an exception has been made to include a review of the compatibility of nonmetallic materials in all high pressure (20 psi) oxygen and oxidizer subsystem components.

3. Fluid line components with electrical interfaces in non-oxygen/oxidizer subsystems were also eliminated for the same reason listed under item 2.

4. For fluid line components with electrical interfaces in oxygen/oxidizer systems, the investigation was limited to that portion of the system with pressures greater than 20 psi. The low pressure portion of the oxygen systems was reviewed thoroughly after the Apollo 204 accident and has been under rigorous control since then.

5. The investigation of fracture mechanics as a potential cause of GSE tank failure has not been included because of the large safety factors employed in GSE tank design. For the spacecraft and GFE subsystems, fracture mechanics has not been included in this investigation due to a separate review being conducted by the Structures and Mechanics Division, Directorate of Engineering and Development, MSC.

6. Manufacturing and process discrepancies as a potential cause of failure were only considered for those tanks which had internal electrical components and those oxygen and oxidizer line components which had direct contact between fluid and electrical elements. A general manufacturing and process review was well beyond the scope of this evaluation. Those types of tanks and components described were judged to be the most probable sources of inflight failures due to manufacturing and process discrepancies for the types of subsystems included in the matrix.

7. Contamination as a source for either mechanical or chemically induced failure of a subsystem has not been included in the investigation because:

a. Cleaning and filtering techniques employed in the program have been generally effective in limiting contamination. Sampling is performed on most fluids and gas systems during loading as a final check.

b. The identification of all potential sources of contamination and the consequences to each subsystem were beyond the capability of resources and time available.

c. Contamination is not now a prime suspect of the cause of the Apollo 13 incident.

8. Estimates of blast and shrapnel damage potential were limited to tanks because there was not sufficient time to extend these estimates to the many lines and components.

9. The evaluation of the consequences of a fluid spill from tanks or line components has been limited to an identification of the types of spacecraft materials which would be damaged if the fluid were released from the subsystem. Component damage due to a single failure within the component was considered as a means of assessing the acceptability of the component design.

The findings of this investigation are reported in separate reports as follows:

Volume I Summary

Volume II Lunar Module

Volume III Command and Service Module

Volume IV Government Furnished Equipment and Ground Support Equipment

Table 1 lists the pressure vessels reviewed and classifies them with regard to their damage potential if they should exceed burst pressure.

Table 2 classifies the components of the LM, CSM, and GFE which were reviewed with regard to the nature of the fluid/electrical interface and the type of fluid. Appendix A contains the cross sectional diagrams and circuit protection diagrams for those components having direct contact with oxygen or oxidizer.

Table 3 describes the application of Teflon derivative materials under high mechanical and pneumatic stress conditions.

The conclusions of the panel were as follows:

1. LUNAR MODULE (LM)

a. None of the electrical components investigated constitute ignition sources in their normal operating modes. Only the PQGS normally exposes electrical devices directly to the pressurized fluid. After thorough analysis it is concluded that adequate circuit protection is provided to preclude ignition.

b. With respect to materials compatibility, it is concluded that materials in all components, operating in their normal modes, are compatible with their respective fluid environment.

c. There are instances of single point failures where internal structural failures can expose non-compatible materials to the fluid environment. Each of these has been assessed and, from the nature of this failure, declared to be an acceptable risk.

d. Based on literature search on the subjects of the capability of oxidizer or fuel to support combustion of the various nonmetallic materials at elevated temperatures, and impact sensitivity of CNR, EPR, and Butyl rubber in oxidizer or fuel, it is concluded that no substantive data are available on either subject.

e. Based on a review of the normal operating modes of the various high pressure systems, it is concluded that the LM pressure vessels are protected with adequate redundancy against failures of such mechanical components as pressure regulators, check valves, relief valves, and burst discs. In addition, all of the high pressure systems in the LM are designed with adequate structural factors of safety.

f. Because there are no electrical components in the LM pressure vessel systems that can intentionally or accidently increase tank pressures a significant amount, the only realistic failure mechanism would appear to be the loss or degradation of thermal blankets. Such a failure could expose the tanks to direct solar heating. Analysis has shown that relatively short periods of attitude hold are required (1/2 - 2 hours) to obtain a hazardous pressure and temperature increase in the gaseous He tanks. If the LM were manned, then such a failure would be detected and corrective action could be taken. The period of most concern is translunar coast, when the LM is unmanned and unmonitored. However, a passive thermal control mode (slow rotation) is normally employed during this mission phase which results in alternate intervals of solar heating and deep space cooling. Extended attitude holds are possible during this phase; however, except for the gaseous He tanks, all tanks remain within design limits for attitude hold periods up to four hours. Wrapping of the gaseous He tanks with H-film could reduce the absorption of solar energy so that attitude holds of at least four hours would be permissible. The probability of undetected thermal blanket loss has been investigated, resulting in the conclusion that loss or degradation of significant blanket area is not a realistic possibility in view of the fastening techniques and forces available during the various mission phases (e.g. launch and boost, SLA deployment and ejection).

g. It is concluded that an oxygen leak on LM exterior materials does not present a problem since the insulation blankets and micro-meteoroid shield will only maintain a pressure of less than 0.1 psi without rupturing. Combustion would not be supported at such a low pressure.

h. The entire LM has not been designed to be compatible with N_2O_4 or A-50. If an oxidizer or A-50 tank were to leak or spill its contents, many non-compatible materials would be exposed. The LM is leak checked before a mission to an extremely tight specification; therefore, tankage leaks should not exist for a normal mission.

i. The study of KOH spillage concluded that of the metallic materials, only aluminum has shown a tendency to corrode. The space environment should preclude even the aluminum reaction, because of rapid vaporization of the water from the electrolyte and its subsequent freezing. One possible area of concern is the fracture mechanics stress corrosion effects of a KOH spill on a highly stressed pressure vessel, such as a gaseous helium bottle. No information is available on this subject. KOH cannot be spilled from any of the LM batteries even if the case vents do not function properly, unless there is an accompanying electrical failure. The LM batteries all have vent valves to relieve product gases. If the vent valves were to fail, the primary batteries would relieve through the gasket cover, whereas the pyro battery cases would split. In either case there is little possibility of an explosive battery case rupture. The primary battery vent valves are operationally

checked just prior to vehicle installation. A similar check will be made on the pyro batteries. There are no data on the burst characteristics of the batteries. MSC is in the process of obtaining these data. It is concluded that the spillage of KOH is extremely unlikely, and, combined with the possibility of getting on a highly stressed pressure vessel, the risk is acceptable.

j. It is impractical to protect the LM against a fragmentary failure of any pressure vessel; therefore, the system design must preclude this type of failure.

2. COMMAND AND SERVICE MODULE (CSM)

All subsystems and components reviewed are considered acceptable with the following exceptions:

a. Environmental control system (ECS)

The quantity gaging system (including the electronics) in the potable water and waste water tanks is exposed to oxygen at pressures of 25 psia during flight and 35 psia during countdown. The electronics is supplied by 28 Vdc through two 5 amp circuit breakers. The acceptability of this design will require additional ignition tests which have already been initiated.

The following tasks were not completed during the ECS review due to lack of detailed component information:

(1) Review of cyclic accumulator O_2 control valve

(2) Review of O_2 flow transducer

(3) Review of O_2 pressure transducer, 100 psi system

(4) MSC review of nonmetallics, which are used on ECS O_2 line components, that NR has accepted by similarity.

(5) Verify that no electrical source could come in contact with the 100 or 900 psi aluminum lines in the O_2 control panel and the ECU.

The required information is being assembled by the contractor and the review will be completed.

b. Electrical power system (EPS)

It was not possible to establish the acceptability or unacceptability of the cryogenic hydrogen tank design. Sufficient information could not be found in the literature to conclusively state that shorting of the internal electrical components of the tank would not initiate a sustained reaction of some kind which could eventually either fail the tank or destroy all internal functional capability. The necessary tests to resolve these issues have been initiated.

Even if such sustained reactions are shown not to exist, it is not possible to determine whether shorting of a single internal component will or will not damage through propagation to enough of the other internal functions of the H_2 tank to cause a mission abort. The necessary tests to determine the extent of propagation have been initiated.

Compatibility tests are required to establish the acceptability of solder and brass in H_2 and have been initiated.

The direct contact between high pressure gaseous oxygen (935 psi) and Teflon-covered power wiring which cannot be inspected after final assembly, such as in the fuel cell oxygen shut off solenoid, is considered an unacceptable design.

The O_2 purge valves and reactant pressure regulator have nonmetallic materials in high mechanical stress applications whose acceptability could not be unconditionally established. The necessary impact tests have been initiated. The pressure switch and the pressure transducer in the O_2 system valve module and the pressure transducer in the fuel cell are conditionally acceptable pending receipt of further detailed information.

Pyro and entry battery test data are not sufficient to establish pressure capability and acceptance procedures and not adequate to insure satisfactory quality control during manufacturing. The necessary test will be performed to provide this assurance. The batteries are believed to have the required pressure capability.

c. Service propulsion system (SPS)

It was not possible to establish the acceptability or unacceptability of the direct contact of electrical components and Teflon with oxidizer and fuel which exists in the SPS quantity gaging sensors. Analysis indicates there should be no problem. Test have been initiated to confirm this analysis.

Compatibility (reactive decomposition of A-50 with Kovar or Ni-Span-C) tests are required and have been initiated to establish the acceptability of:

(1) Kovar in Aerozine 50

(2) Ni-Span-C in Aerozine 50

(3) Solder in N_2O_4 (flammability)

3. GOVERNMENT FURNISHED EQUIPMENT (GFE) AND GOVERNMENT SUPPORT

GFE

All GFE pressure vessels and oxygen systems are considered satisfactory with the following exception:

The -7 PLSS O_2 bottle should not use aged Arde material since the predicted failure mode at maximum design operating pressure is by fracture rather than by leakage, as in the -6 PLSS. A decision has been made to replace this material.

GSE

Oxygen Systems

The available information on the GSE oxygen systems was not sufficient to verify the acceptability of the design with respect to:

a. Impact sensitivity of nonmetallic materials application.

b. Characteristics of electrical component interfaces with oxygen.

c. Accumulation of contaminants.

The required information is being assembled to complete the review. Usage experience indicates no problem areas.

Hydrogen Dewar

Review of the hydrogen dewar indicates that the design and procedures are acceptable with the following exceptions:

a. The possible presence in the system of shock sensitive materials. Accumulation of these materials over a period of time may cause quantities to exceed the maximum allowable. An investigation has been initiated to determine if such accumulations can occur.

b. Component failures have occurred where external leakage of gaseous hydrogen was detected. A review of the need for more frequent servicing or redesign of these components has been initiated.

The recommendations of Panel 6 are:

1. GENERAL

   a. Re-evaluate the desirability of adding acceptance vibration testing on tanks with internal electrical components.

   b. Broaden the present materials controls to assure MSC surveillance of all materials requirements and applications.

   c. Conduct intentional fault tests on all spacecraft components where combustion is possible to assure adequate design margins and circuit protection.

2. LUNAR MODULE (LM)

   a. The gaseous helium tanks should be wrapped with a single layer of H-film to preclude the effects of KOH attack from battery spillage and to reduce the effects of direct solar heating.

   b. The pyro battery activation procedure should be modified to include vent valve checkout.

   c. The requirement for the APS propellant level detector should be investigated further, and the units should be removed or inerted if found to be unnecessary.

   d. Additional materials testing should be conducted in those areas where a general lack of engineering data have been discovered.

      Specifically, the following tests should be conducted:

      (1) GOX impact tests of all LM O_2 system impact applications.

      (2) Combustion and ignition tests of appropriate LM materials in N_2O_4 and A-50 to verify analytical conclusions of this study.

      (3) Impact tests of all nonmetallics in LM N_2O_4 and A-50 impact applications.

      (4) Conduct present standard O_2 flash and fire test at elevated pressures to verify the applicability of existing ambient data.

   e. Burst tests on batteries should be conducted.

3. COMMAND AND SERVICE MODULE (CSM)

a. ENVIRONMENTAL CONTROL SYSTEM (ECS)

Perform analyses of the water quantity gaging system to determine the integrity of the transducer cover and the non-propagation of flame to the bladder for a worst case short in the transducer. If the results indicate a marginal factor of safety, perform a test using actual hardware for both flight and ground conditions. At the same time, the requirement for a water quantity gaging system should be re-examined to determine if it is mandatory for flight.

Complete the ECS review for the following:

(1) Cyclic accumulator O_2 control valve

(2) O_2 flow transducer

(3) O_2 pressure transducer, 100 psi system

Complete the review of all nonmetallics on O_2 line components that NR has accepted by similarity. If any nonmetallics are found not acceptable for high pressure O_2 then review the components, which contain these nonmetallics, with the guidelines for this study.

b. ELECTRICAL POWER SYSTEM (EPS)

Test plans already initiated should be completed to determine whether:

(1) Sustained reactions can be initiated by means of electrical shorts in the CSM cryogenic hydrogen tank wiring. If reactions can be initiated, are they sufficiently energetic to rupture the hydrogen tank or lines?

(2) If no sustained reactions can be identified, can a single electrical short within the tank or conduit result in failure of enough tank functions (heaters, fan, quantity, temperature) to result in a mission abort?

Complete the redesign of the fuel cell oxygen shutoff valve (or system) already initiated.

Proceed with the MSC tests of impact of nonmetallic materials in high pressure oxygen to resolve the issues associated with the oxygen purge valve and reactant pressure regulators.

Review expected information on oxygen system valve module pressure switch and pressure transducer and fuel cell pressure transducer to determine validity of conclusions reached to date and take necessary action if proven invalid.

Complete the testing already initiated to determine the burst capability of the entry and pyro battery cases and modify the acceptance test procedure to include a proof pressure test consistent with the results of the burst test.

c. SERVICE PROPULSION SYSTEM (SPS)

Complete the testing already initiated to determine whether sustained reactions can be initiated in the SPS quantity gaging sensors within the energy limits of each application.

d. Complete the testing already initiated to resolve the compatibility issues mentioned in the CONCLUSIONS SECTION.

e. Review all pressure vessel acceptance criteria, test and checkout procedures and operational procedures.

4. GOVERNMENT FURNISHED EQUIPMENT (GFE) AND GROUND SUPPORT EQUIPMENT (GSE)

a. GOVERNMENT FURNISHED EQUIPMENT (GFE)

The material in the -7 PLSS O_2 pressure vessel should be changed to one having a failure mode of leakage rather than fracture at maximum design operating pressure.

Analysis should be made of the effect of releasing the contents of the life raft CO_2 bottle into the CM cabin.

b. GROUND SUPPORT EQUIPMENT (GSE)

Obtain the necessary information to complete the evaluation of the GSE oxygen systems.

Perform a review of the hydrogen dewar system to determine any sources of contamination and the constituents. This study should include metallic as well as nonmetallic contamination and should investigate the accumulation of contaminants over a period of time.

Investigate components in the hydrogen dewar system that have demonstrated excessive failures to determine the necessity of periodic change of soft goods or possible redesign.

X INCLUDED IN PANEL 6 EVALUATION

NOT INCLUDED IN PANEL 6 EVALUATION

INFORMATION SCOPE / HARDWARE SCOPE		ALL CSM, LM, GFE, GSE PRESSURIZED SUBSYSTEMS					
		OXYGEN/OXIDIZER SUBSYSTEMS			NON OXYGEN OXIDIZER SUBSYSTEM		
		TANK OR CONTAINER	LINE COMPONENTS WITH ELECTRICAL INTERFACES	LINES & LINE COMPONENTS W/O ELECTRICAL INTERFACES	TANK OR CONTAINER	LINE COMPONENTS WITH ELECTRICAL INTERFACES	LINES & LINE COMPONENTS W/O ELECTRICAL INTERFACES
POTENTIAL SOURCES OF SUBSYSTEM FAILURES	ELECTRICAL	X	X (>20 PSI)	N/A	X	FUEL COMPONENTS ONLY	N/A
	MATERIALS COMPATIBILITY	X	X (>20 PSI)		HYDROGEN EMBRITTLEMENT ONLY		
	MECHANICAL	X	COMPATIBILITY OF NON-METALLIC MATERIALS IN HIGH PRESSURE OXYGEN/OXIDIZER		X		
	THERMAL	X	X		X		
	FRACTURE MECHANICS						
	MFG & PROCESS DISCREPANCIES	IF THERE ARE ELECTRICAL COMPONENTS IN TANK	IF THERE IS DIRECT CONTACT BETWEEN FLUID AND ELEC. ELEMENTS		IF THERE ARE ELECTRICAL COMPONENTS IN TANK		
	CONTAMINATION						
POTENTIAL CONSE-QUENCES OF FAILURE	BLAST AND SHRAPNEL	X			X		
	SPILL	IDENTIFY TYPES OF MATERIALS DAMAGED	COMPONENT DAMAGE DUE TO SINGLE FAILURE WITHIN COMPONENT		IDENTIFY TYPES OF MATERIALS DAMAGED		

FIGURE I - SCOPE OF RELATED SYSTEMS EVALUATION

TABLE 1 - CHARACTERISTICS OF PRESSURE VESSELS REVIEWS

(a) CM TANK SUMMARY

PRESSURE VESSEL	NO. OF TANKS	INTERNAL COMPONENTS (NOTE 1)	PRESSURE, PSI				MAXIMUM TNT(LBS) EQUIVALENT AT BURST PRESSURE (EA TANK)	FRACTURE MODE	DAMAGE POTENTIAL CLASS: (NOTE 2)	REMARKS
			NORMAL	LIMIT	PROOF	LOWEST DOC TEST BURST				
RCS Helium	2	Metallic	4240	5000	6667	8600	0.143	Fragment	A	
ECS Oxygen Surge	1	Metallic	910	1020	1356	2150	0.126	Rupture	A	
RCS Prop. Oxidizer	2	Non-metallic	295	360	480	885	0.050	Rupture	A	
RCS Prop. Fuel	2	Non-metallic	295	360	480	1040	0.041	Rupture	A	
Cabin Repress. Oxygen (ECS)	3	None	910	1210	1600	2767	0.068	Leak	C	
Glycol Reservoir (ECS)	1	Non-metallic	50WG 8-27O_2	60WG 27 O_2	90WG 40 O_2	420	0.002	Leak	C	
Potable Water (ECS)	1	Electrical	18-22 H_2O 18-27 O_2	48H_2O 27 O_2	64H_2O 40 O_2	*100H_2O *100 O_2	0.008	Leak	C	*Design
Waste Water (ECS)	2	Electrical	18H_2O 18-27 O_2	40H_2O 27O_2	64H_2O 40 O_2	130H_2O 110 O_2	0.015	Leak	C	
Life Raft Pressure	2	None		4500			0.014	Leak	C	

TABLE 1 - CONTINUED

(b) SM TANK SUMMARY

PRESSURE VESSEL	NO. OF TANKS	INTERNAL COMPONENTS (NOTE 1)	PRESSURE, PSI				MAXIMUM TNT(LBS) EQUIVALENT AT BURST PRESSURE (EA TANK)	FRACTURE MODE	BURST DAMAGE POTENTIAL CLASS: (NOTE 2)	REMARKS
			NORMAL	LIMIT	PROOF	LOWEST DOC TEST BURST				
SPS Helium	2	None	3585	3685	4910	6250	13.95	Fragment	A	
SPS Prop. Oxidizer	2	Electrical	182	225	300	413*	3.88	Fragment	A	* Sump Tank
SPS Prop. Fuel	2	Electrical	182	225	300	413*	3.88	Fragment	A	* Sump Tank
RCS Helium	4	Metallic	4240	4500	5985	7310	0.40	Fragment	A	
SPS GN_2	2	None	2550	2900	5000	9820	0.04	Fragment	A	
Pan Camera GN_2	1	None	4000	4500	5985	7310	0.60	Fragment	A	
RCS Prim. Oxidizer	4	Non-metallic	192	248	331	567	0.061	Rupture	B	
RCS Prim. Fuel	4	Non-metallic	192	248	331	603	0.06	Rupture	B	
LH_2 Cryo	2	Electrical	255	285	379	771	0.30	Leak	C	
RCS Sec. Oxidizer	4	Non-metallic	192	248	480	885	0.05	Leak	C	
RCS Sec. Fuel	4	Non-metallic	192	248	480	1040	0.05	Leak	C	
Fuel Cell Pressure GN_2	3	None	1500	1730	3000	9400	0.02	Leak	C	

TABLE 1 - CONTINUED

(c) LM TANK SUMMARY

PRESSURE VESSEL	NO. OF TANKS	INTERNAL COMPONENTS (NOTE 1)	PRESSURE, PSI				MAXIMUM TNT(LBS) EQUIVALENT AT BURST PRESSURE (EA TANK)	FRACTURE MODE	BURST DAMAGE POTENTIAL CLASS: (NOTE 2)	REMARKS
			NORMAL	LIMIT	PROOF	LOWEST DOC TEST BURST				
RCS (A/S) Oxidizer	2	Non-metallic	180	250	333	767	0.0645	Fragment	A	
APS (A/S) Oxidizer	1	Electrical	184	250	333	452	2.08	Rupture	A	
A/S ECS Oxygen	2	None	840	1000	1370	2010	0.194	Fragment	A	
RCS (A/S) Fuel	2	Non-metallic	180	250	333	584	0.107	Fragment	A	
A/S ECS Water	2	Non-metallic	47.3	50	64	314	0.026	Fragment	A	
DPS Prop. Oxidizer	2	Electrical	248	270	375* 360**	440	3 92	Rupture	A	*LM-6, -7 -8, -9 **LM-10 & subs
DPS Prop. Fuel	2	Electrical	248	270	375* 360**	440	3.92	Rupture	A	*LM-6, -7, -8, -9 **LM-10 & subs
D/S ECS Oxygen	1	Non-metallic	2690	3000	4120	5200	3.60	Fragment	A	
DPS SHe	1	Metallic	400-1550	1710	2274	3425	2.88	Fragment	A	
DPS Ambient Helium	1	None	1640	1750	2327	3100	0.404	Fragment	A	

TABLE 1 - CONTINUED

(d) GSE - GFE TANK SUMMARY

PRESSURE VESSEL	NO. OF TANKS	INTERNAL COMPONENTS (NOTE 1)	PRESSURE, PSI				TNT EQUIVALENT AT BURST PRESSURE (LBS)	FRACTURE MODE	DAMAGE POTENTIAL CLASS: (NOTE 2)	REMARKS
			NORMAL	LIMIT	PROOF	LOWEST DOC TEST BURST				
GSE LH_2 Dewar Assy	1	Electrical	20	33	45	90*	0.185	Unknown	Unknown	*Design
-6 PLSS O_2 Tank	2	None	1020	1110	1665	2345	0.050	Leak	C	
-7 PLSS O_2 Tank	2	None	1400	1500	2250	3000*	0.050	Leak	C	*Design
OPS	4	None	5880	6750	10130	14700	0.182	Leak	C	

NOTE 1:

Electrical = Electrical + Nonmetallic + Metallic

Nonmetallic= Nonmetallic and metallic

Metallic = Metallic only

NOTE 2:

Class A = Virtually certain loss of module due to propagation to other tanks.

Class B = Uncertain extent of damage.

Class C = Will not propagate to other tanks and therefore damage should be very limited.

TABLE 2 - SUMMARY OF THE COMPONENTS HAVING FLUID/ELECTRICAL INTERFACES OR POTENTIAL INTERFACES AS A RESULT OF FAILURES

FLUID ELECTRICAL INTERFACE	FLUID	OXYGEN	OXIDIZER (AND FUEL)* *Indicates on fuel system also
DIRECT CONTACT		F/C Valve Module Solenoid Valve CM Water Quantity Gages	SPS Propellant Sensors (Tank)* LM DPS PQGS*
SINGLE FAILURE FOR DIRECT CONTACT	STRUCTURAL FAILURE	F/C Pressure Xducer EPS O_2 System Pressure Switch EPS O_2 System Pressure Xducer EPS O_2 Flow Sensor CSM ECS Control Valve CSM ECS Pressure Xducer - -0133, -0055, -0052 CSM ECS O_2 Flow Xducer LM D/S ECS O_2 Tank Pressure Xducer LM A/S ECS O_2 Tank Pressure Xducer LM A/S ECS O_2 Manifold Pressure Xducer (GFE) Primary O_2 Pressure Xducer	SM RCS Oxidizer Pressure Xducer SM RCS Oxidizer Isolation Valve* SM RCS Oxidizer Valve* LM DPS Lunar Dump Valve* APS,DPS Oxidizer Temp Xducer* DPS Pilot Valve (Fuel only) RCS,SPC,DPS Oxidizer Pressure Xducer* APS Oxidizer Pressure Xducer APS Pilot Valve (Fuel only) APS Propellant Level Detector* APS,DPS Propellant Pre-Valves(Fuel only) LM RCS Injector Valve* LM RCS Solenoid Valves*
	LEAK BETWEEN MOVING PARTS		
MULTIPLE FAILURE REQUIRED FOR DIRECT CONTACT		F/C O_2 Purge Valve LM A/S ECS Cabin Pressure Valve Solenoid	CM RCS Purge Valve* CM RCS Temperature Sensor* CM RCS Propellant Isolation Valve* CM RCS Oxidizer Interconnect Valve* CM RCS Oxidizer Dump Valve* CM RCS Oxidizer Engine Injection Valve* (Direct and Auto) SM RCS Temperature Sensor* SM RCS Oxygen Pressure Signal Cond.* SPS Propellant Utilization Valve* SPS Oxidizer Line Heaters* SPS Oxidizer Line Temp Xducer* SPS Oxidizer Line Pressure Xducer*

TABLE 3 - IMPACT APPLICATIONS OF TEFLON DERIVATIVES IN PURE OXYGEN AT PRESSURES GREATER THAN 20 PSI

COMPONENT NAME AND SUBSYSTEM	APPLICATION	TYPE OF TEFLON	OXYGEN PRESSURE AT TEFLON COMPONENT-PSI	TEST PERFORMED TO ESTABLISH ACCEPTABILITY
392 High Pressure Oxygen Control Module, LM ECS	Gasket	"Teflon"	(Normal)-Vacuum (Malfunction)-3000	* 0/20 2000 psi MSC/EP
505 Interstage Disconnect, LM ECS	Gasket	"Teflon"	(Normal)-950 (Malfunction)-1000	* 0/20 2000 psi MSC/EP
390 Oxygen Control Module, LM ECS	Gasket	"Teflon"	(Normal)-6.2 (Malfunction)-950	* 0/20 2000 psi MSC/EP
321 Fill Coupling LM ECS	Poppet Seal	KEL-F	(Normal)-3000 (Malfunction)-300	* 0/20 2000 psi MSC/EP
Fuel Cell Valve Module, CSM EPS O_2 Line Component	Ball and Adapter	KEL-F	935	* 0/20 2000 psi MSC/EP
O_2 Reactant Pressure Regulator, CSM EPS Line Component	Poppet on steel seat inlet and vent	Fluoro Carbon Rubber (Viton)	935	* 0/4 2000 psi WSTF * 0/20 2000 psi MSC/EP
Cyclic Accumulator Control Valve (1.36)	Poppet	KEL-F/ AMS3650	(Normal)-100 (Malfunction)-156	* 0/20 2000 psi MSC/EP
PLSS O_2 Fill Connector	Seal	"Teflon"	(Normal)-1100	Subjected to proof pressure - no ignition

NOTE: * 0/Digit designates no ignition at number of drops per specific pressure

APPENDIX

CROSS SECTIONAL VIEWS AND CIRCUIT PROTECTION DIAGRAMS FOR ALL COMPONENTS IN SPACECRAFT WHICH HAVE DIRECT CONTACT BETWEEN FLUID (OXYGEN, OXIDIZER OR FUEL) AND ELECTRICAL COMPONENTS.

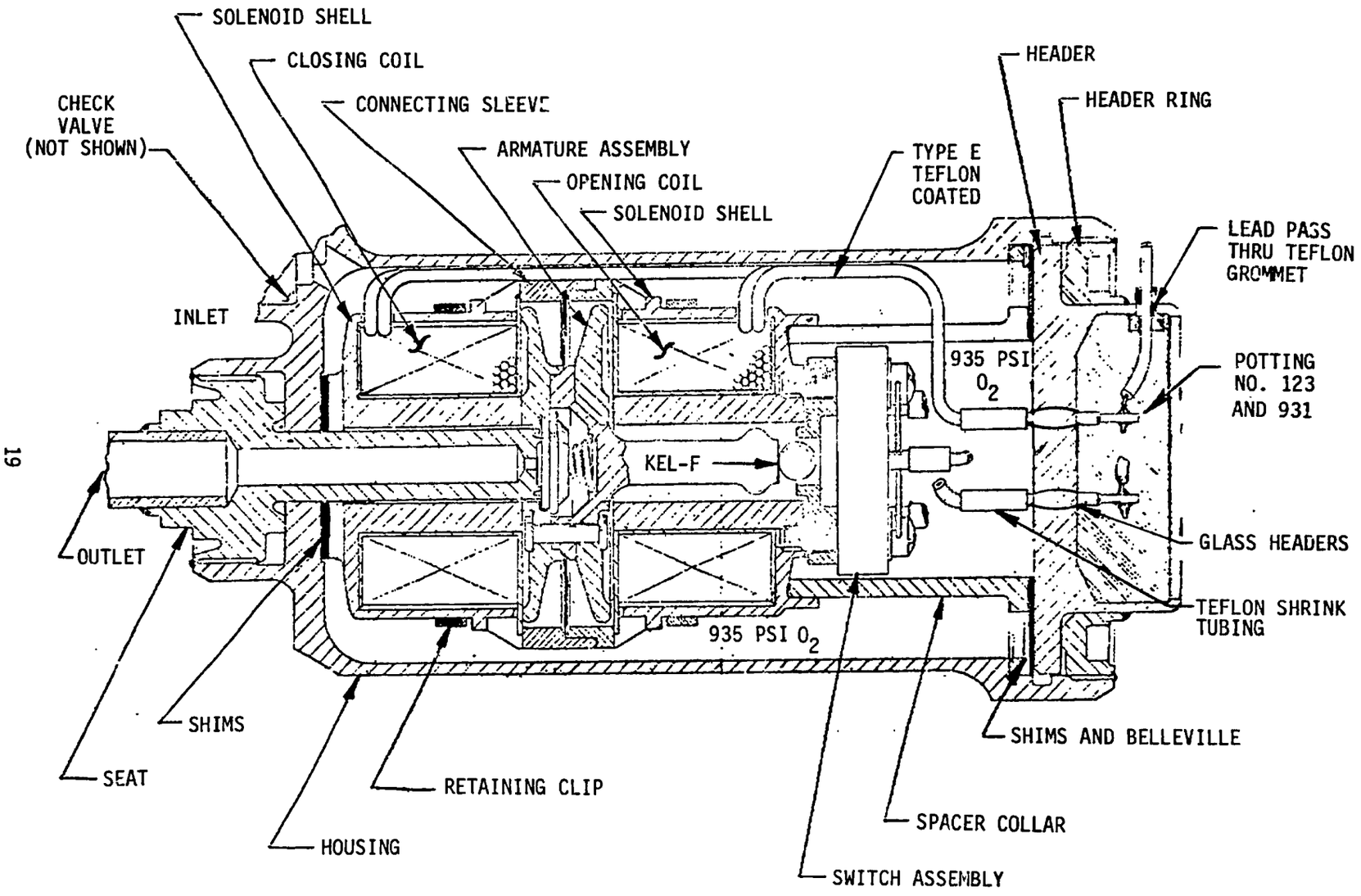

FIGURE A-1.- FUEL CELL VALVE MODULE SOLENOID VALVE.

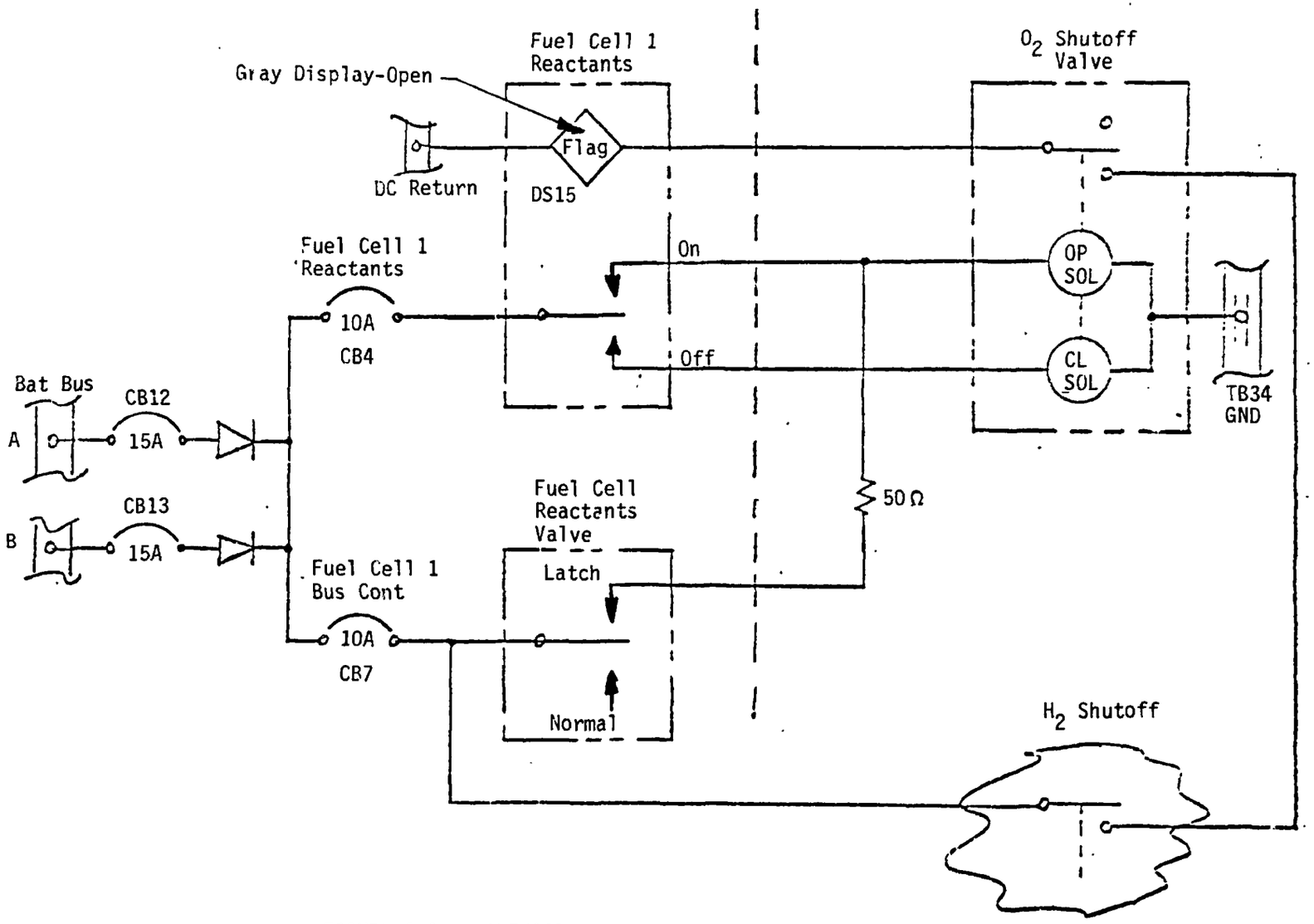

FIGURE A-2.- SOLENOID VALVE CIRCUIT DIAGRAM.

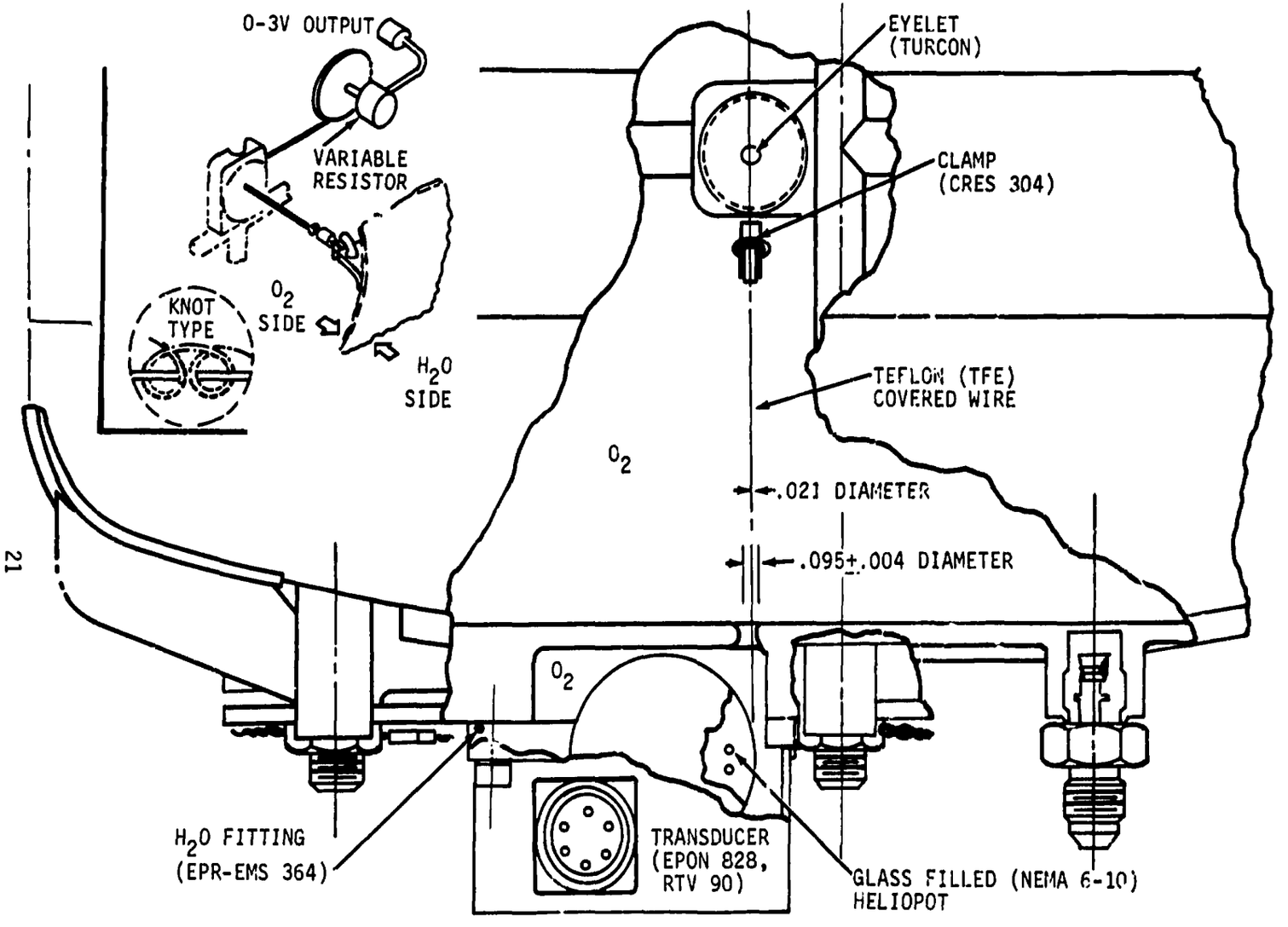

FIGURE A-3.- CM POTABLE AND WASTE WATER QUANTITY TRANSDUCER.

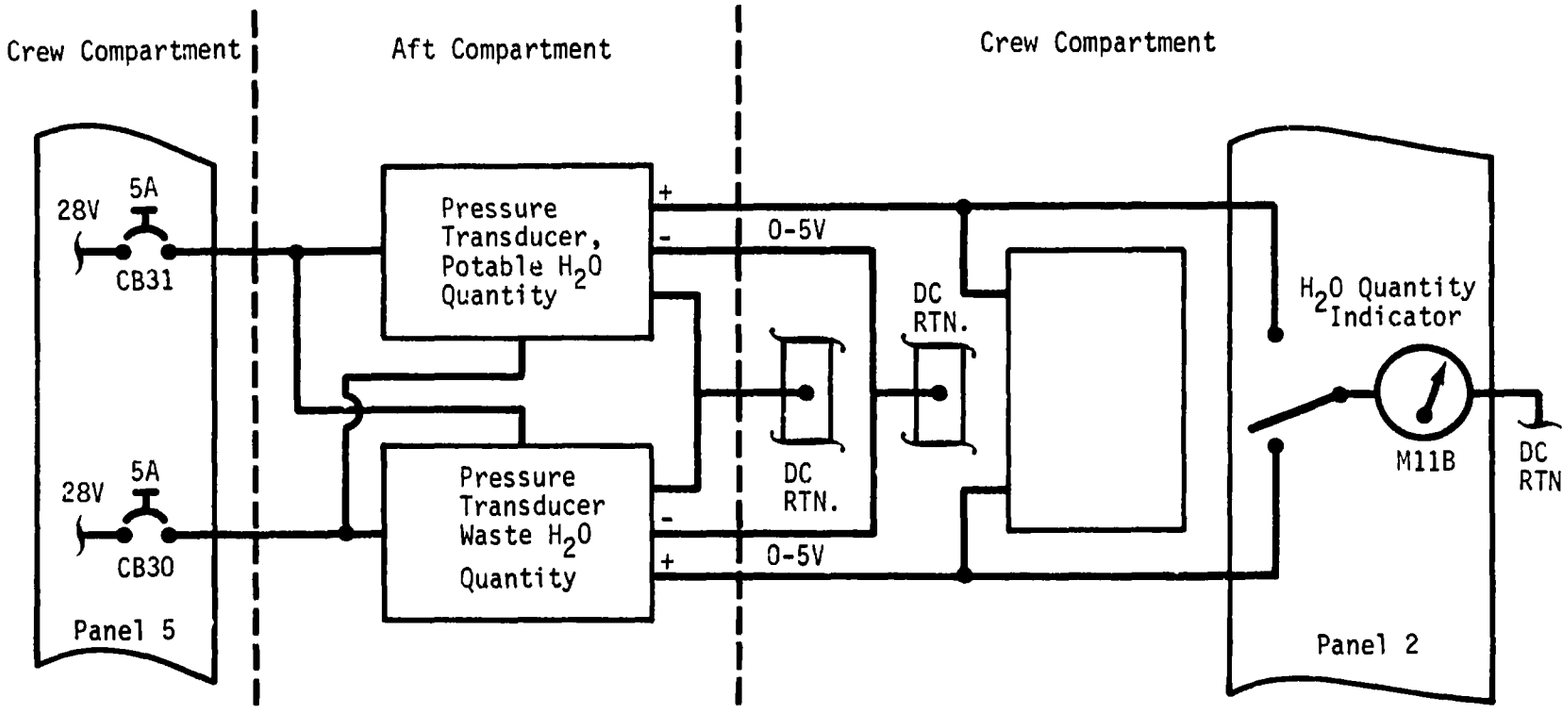

FIGURE A-4.- ELECTRICAL SCHEMATIC, POTABLE AND WASTE H_2O QUANTITY SENSORS

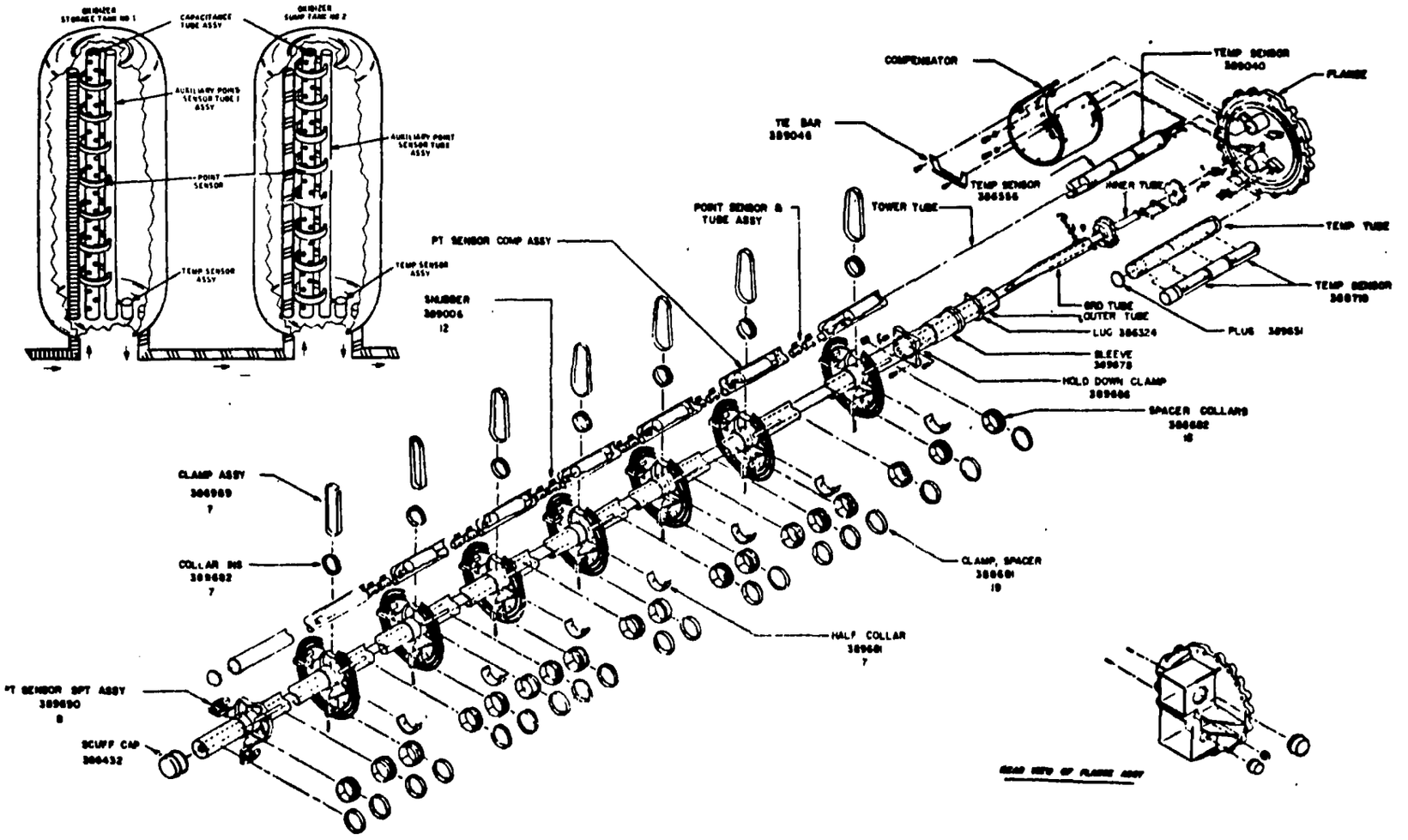

FIGURE A-5.- OXIDIZER PROBE ASSEMBLY.

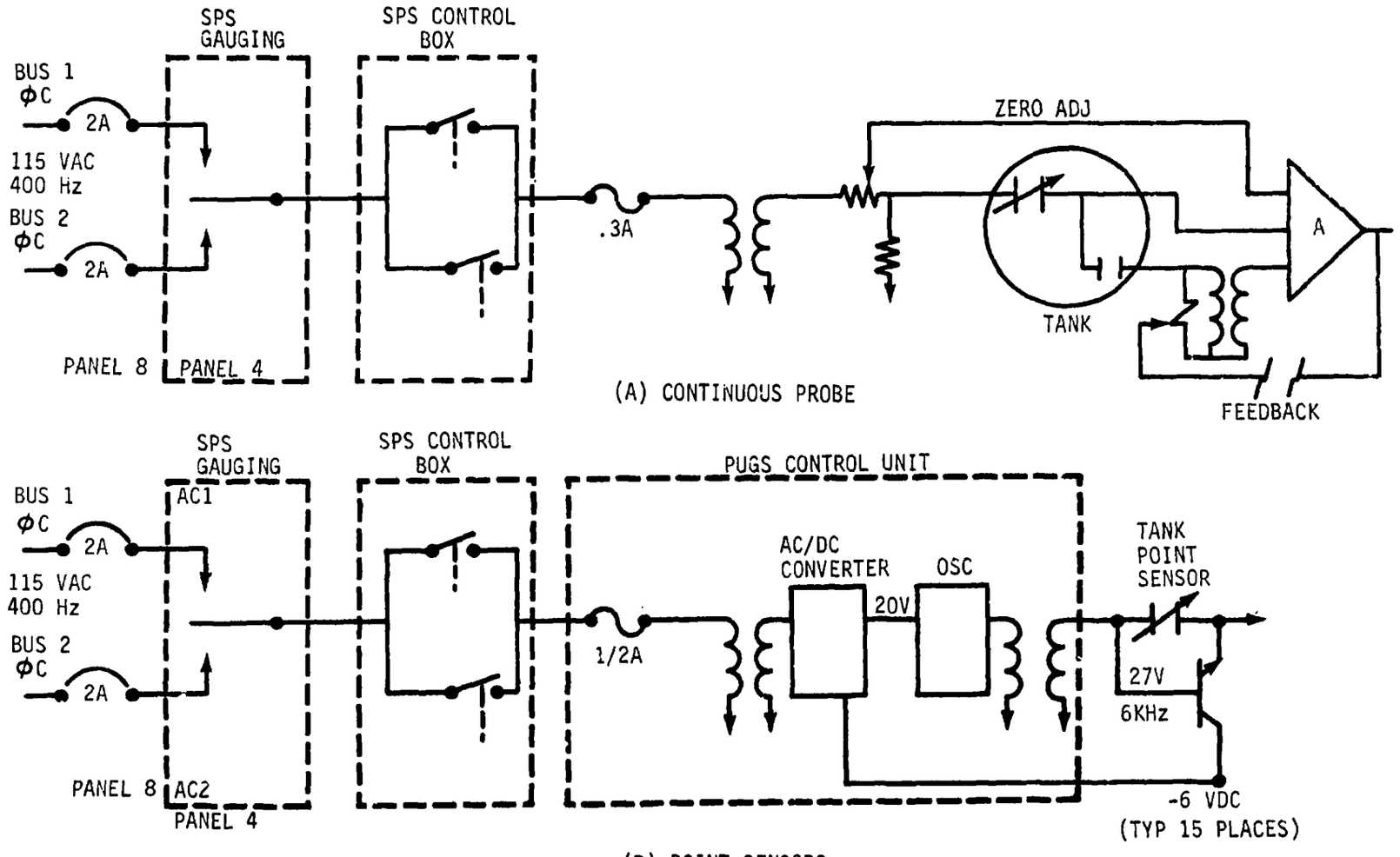

(B) POINT SENSORS

FIGURE A-6.- SPS OXIDIZER GUAGING SYSTEM

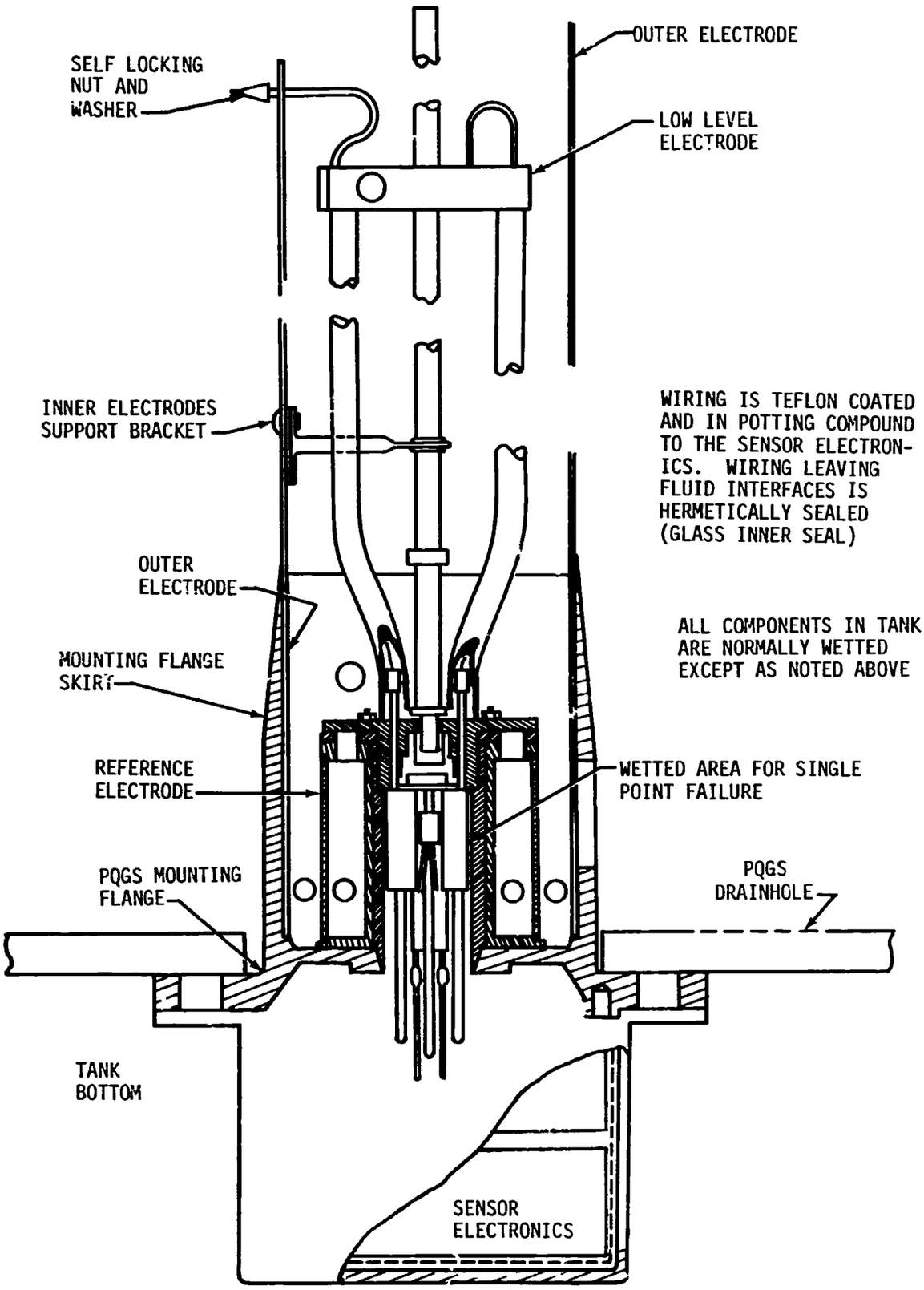

FIGURE A-7.- PQGS SENSOR.

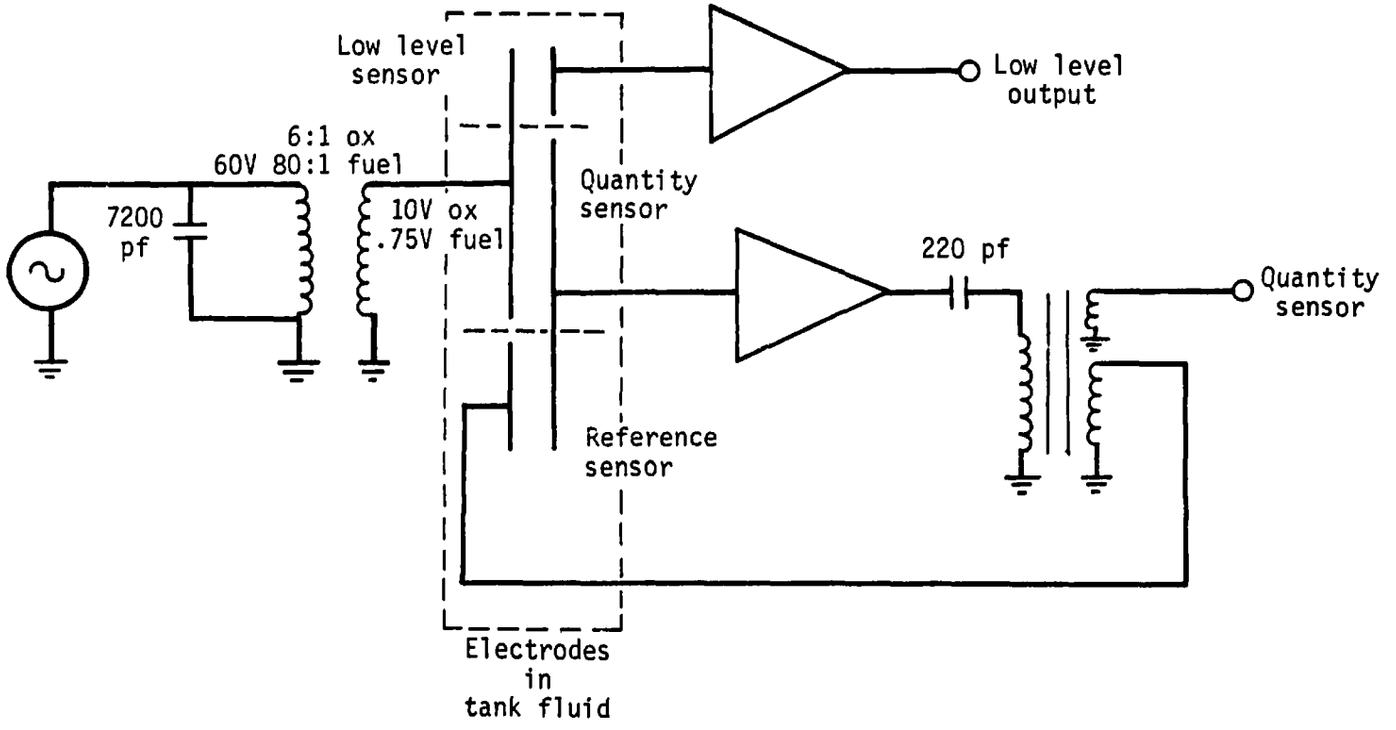

FIGURE A-8.- PQGS SENSOR SCHEMATIC.

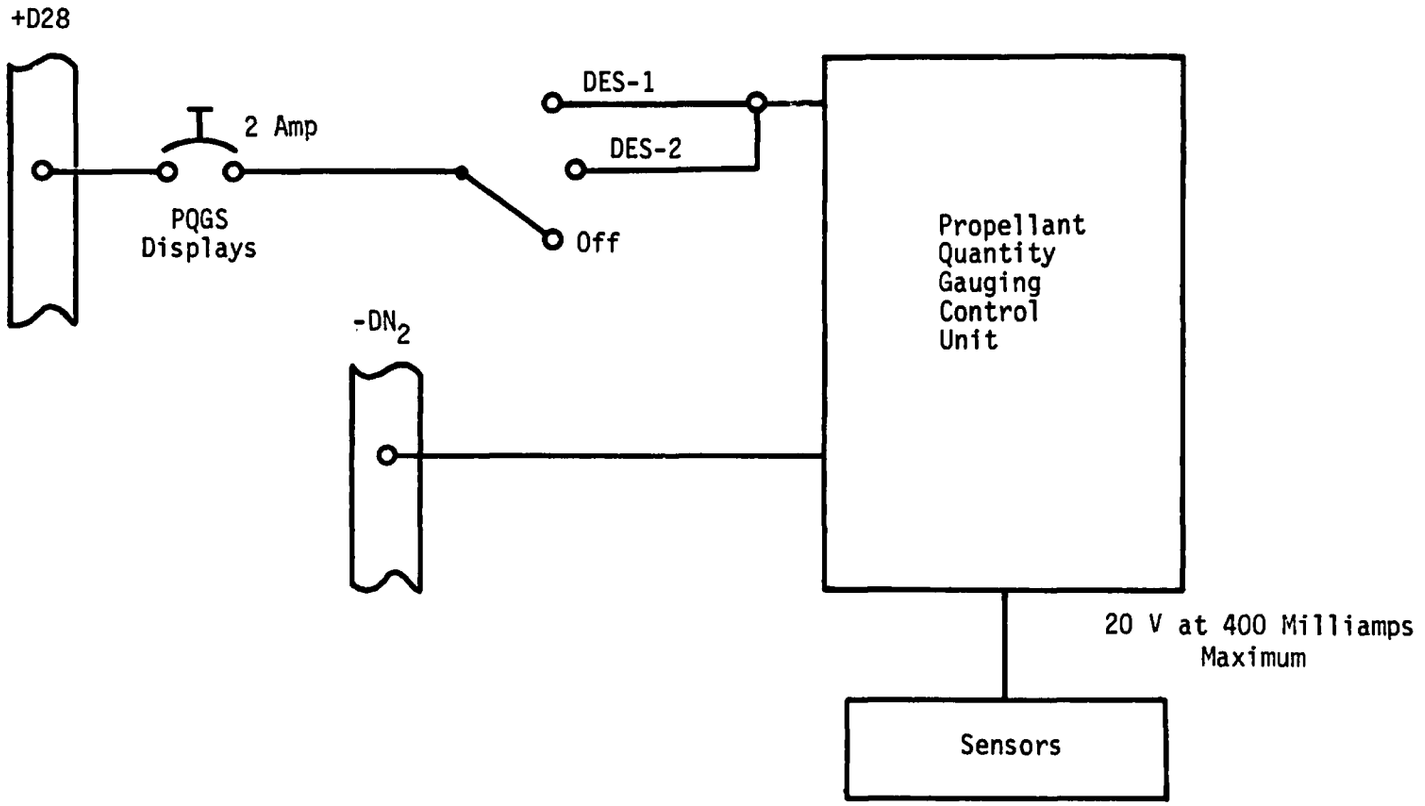

FIGURE A-9.- PQGS SYSTEM SCHEMATIC