2 ~~Lewis Research Center~~ 294

NATIONAL AERONAUTICS AND SPACE ADMINISTRATION

MSC APOLLO 13 INVESTIGATION TEAM

# PANEL 1

Get DRB

## SPACECRAFT INCIDENT INVESTIGATION

## VOLUME II

## MANUFACTURING AND TEST HISTORY OF OXYGEN TANK

FACILITY FORM 602
N71-19969 (ACCESSION NUMBER) (THRU)
74 (PAGES) G3 (CODE)
TMX-66921 (NASA CR OR TMX OR AD NUMBER) 31 (CATEGORY)

JULY 1970

RECEIVED NASA STI FACILITY INPUT BRANCH FEB 1971

MANNED SPACECRAFT CENTER
HOUSTON, TEXAS

Reproduced by NATIONAL TECHNICAL INFORMATION SERVICE Springfield, Va. 22151

MSC APOLLO 13 INVESTIGATION TEAM

FINAL REPORT

PANEL 1

SPACECRAFT INCIDENT INVESTIGATION

July 1970

VOLUME II

MANUFACTURING AND TEST HISTORY OF OXYGEN TANK

Donald D. Arabian
Chairman, Panel 1

CONTENTS


| Section | | Page |
|---|---|---|
| 1.0 | TANK MANUFACTURING AT BEECH AIRCRAFT | 1 |
| | 1.1 GENERAL | 1 |
| | 1.2 MANUFACTURING HISTORY OF CRYOGENIC OXYGEN TANK 2 | 1 |
| | 1.3 SUPPORTING DATA | 6 |
| | 1.3.1 Discrepancies Not Reworked to Drawing | 6 |
| | 1.3.2 Procedures | 7 |
| | 1.3.3 Other Documents | 7 |
| 2.0 | CRYOGENIC SHELF INSTALLATION AT NORTH AMERICAN | 9 |
| | 2.1 GENERAL | 9 |
| | 2.2 CRYOGENIC OXYGEN SHELF HISTORY AT NR, DOWNEY, CALIF. | 9 |
| | 2.3 SHELF DROP INCIDENT EVALUATION | 16 |
| | 2.3.1 Handling Sequence | 16 |
| | 2.3.2 Dynamics | 18 |
| | 2.3.3 Mathematical Representation | 18 |
| | 2.3.4 Analysis of Results | 20 |
| | 2.3.5 Comparison with Quality Test Environment | 21 |
| | 2.3.6 Tank Structural Review | 22 |
| | 2.4 SUPPORTING DATA | 22 |
| | 2.4.1 Discrepancies Not Reworked to Drawing | 22 |
| | 2.4.2 Test Procedures and Specifications | 24 |
| | 2.4.3 Other Documentation | 24 |


PRECEDING PAGE BLANK NOT FILMED

Section Page

3.0 CRYOGENIC SHELF CHECKOUT AT KENNEDY SPACE CENTER . . . . . 25

3.1 GENERAL . . . . . 25

3.1.1 Inability to Detank . . . . . 25

3.1.2 $O_2$ Tank Fan Motor Performance . . . . . 27

3.1.3 $O_2$ Quantity Gaging System Checkout . . . . . 28

3.1.4 $O_2$ System Purity . . . . . 28

3.2 OXYGEN SHELF HISTORY AT KSC . . . . . 29

3.3 DETANKING INCIDENT AND EVALUATION . . . . . 38

3.3.1 Description of the Problem . . . . . 39

3.3.2 Ground Support Equipment (GSE) Investigation . . . . . 39

3.3.3 Spacecraft Investigation . . . . . 41

3.3.4 Tank No. 2 Detanking Procedure . . . . . 44

3.3.5 Management Actions and Launch Rationale . . . 48

3.3.6 Post Launch Detanking Analysis . . . . . 52

3.4 SUPPORTING DATA . . . . . 58

3.4.1 DR's, MR's, Specification, TPS's, Related Documents, Waivers, and TCP's . . . . 62

3.4.2 Sampling and Loading Procedures, Fill Line Filter Analysis . . . . . 64

3.4.2.1 Summary of KSC Sample Results . . . . 67

3.4.2.2 Sample Analysis Report Numbers . . . 69

Volume II reviews the history of oxygen tank no. 2 on its cryogenic shelf as launched in Spacecraft 109. The tank assembly, spacecraft installation, and prelaunch checkout are discussed together with the significant incidents at each location. The acceptance rationale and the tank launch configuration are presented.

# 1.0 TANK MANUFACTURING AT BEECH AIRCRAFT

## 1.1 GENERAL

A detailed review was made of tank fabrication of oxygen tank 2 S/N 10024XTA0008 at Beech Aircraft Company (fig. 1-1). Assembly and test records, material review dispositions, and failure reports were reviewed. Due to the particular significance of the fan, heater, and density probe wiring, a special review and demonstration of assembly methods of these components was made at the plant at Boulder, Colorado. (Data bank file no. 125)

The installation procedures for heater, fan, and probe wiring were found to be critical, with several areas where routing damage would not be visible on the assembled product. (While mating a fan with the heater probe, the demonstrator abraided the fan wiring at the motor exit point. This area was not visible with the fan completely installed.)

Assembly records for this tank revealed no significant data except for a prevalence of fan motor wiring problems. These had apparently been corrected by improved procedures and inspection requirements prior to fabrication of the motors installed in tank XTA0008 for delivery. None of the testing or inspections conducted gave any positive indication of actual pre-shipment damage.

The tank was accepted with a waiver for an out-of-specification heat leak rate. This appeared to have no bearing on the flight failure.

## 1.2 MANUFACTURING HISTORY OF CRYOGENIC OXYGEN TANK 2

Pressure Hemispheres.- Rough machine forged pressure hemispheres for the Apollo 13 cryogenic oxygen tank 2 were received by Airite Corporation of Sargent Industry from Cameron Iron Works in April 1966. The properties such as physical, chemical and grain size were verified, using radiographic inspection techniques. After the pressure vessel hemispheres were machined and welded, they were dimensionally inspected and X-rayed. The heater and quantity probe support brackets (provided by Beech Aircraft Company) were installed and the pressure vessel girth welds then accomplished and X-rayed. The tank was shipped to Beech Aircraft Company in June 1966. The pressure vessel was proof tested at approximately 1,325 psig and leak checked at approximately 925 psig.

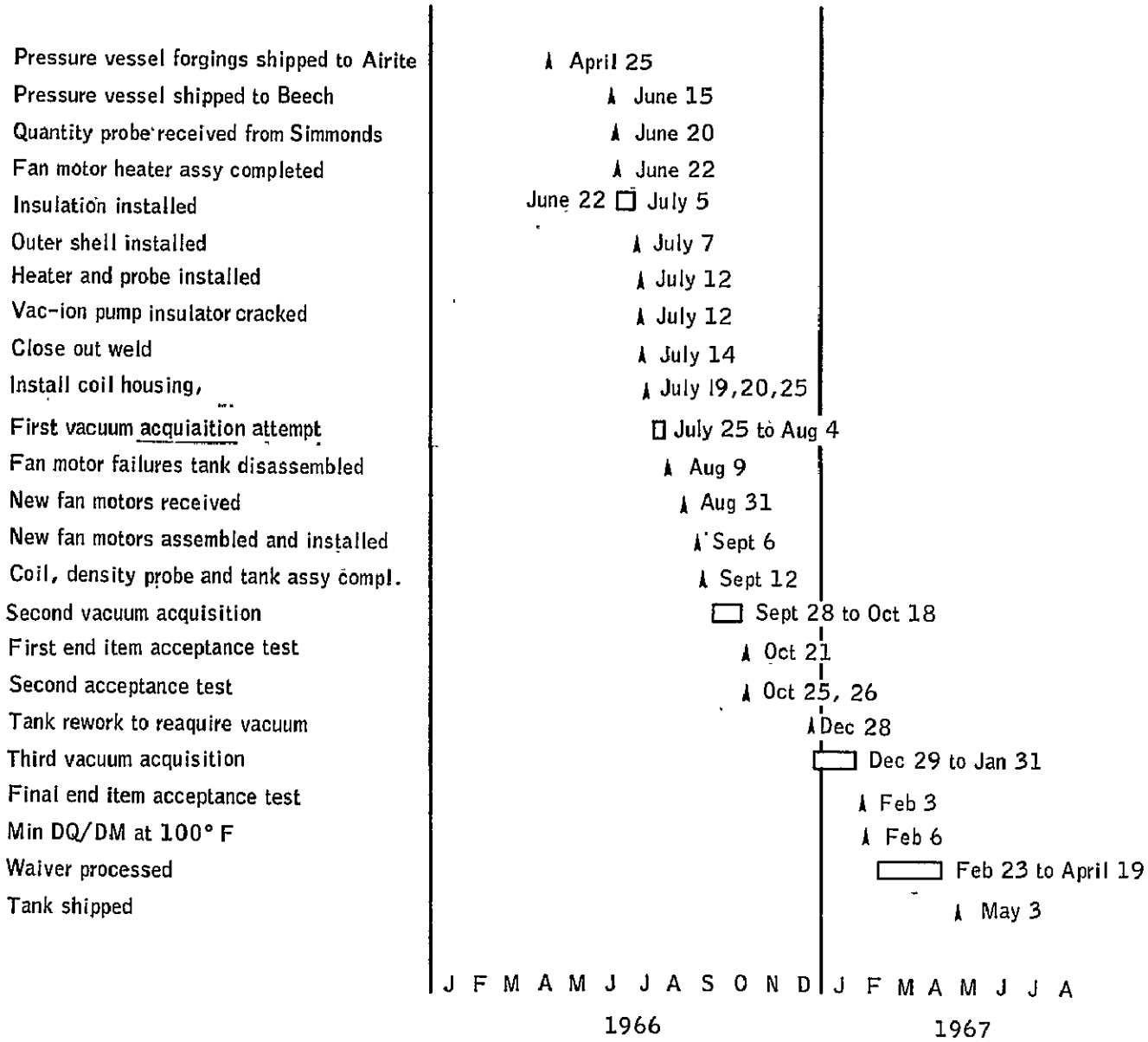


Figure 1-1.- Manufacturing and test flow for the oxygen tank at Beech.

A total of seven insulation layers were installed on the pressure vessel, with an inspection after each layer, and the vapor cooling supply tube installed between insulation layers three and four. This was accomplished between 27 June and 5 July 1966.

The outer shell assembly halves were deep-drawn and chemically milled at Chemtronics, Inc. After the physical and chemical properties were verified, the halves were dimensionally inspected, welded, and X-rayed. During X-ray of the lower assembly on 28 March 1966, a porous area was found around the vacuum valve. This was replaced by material review action with an alternate part on 27 May 1966 per MRB C55461. The two outer shell halves were then installed over the insulated pressure vessel, welded and X-rayed.

Quantity Probe.- The quantity probe was provided by Simmonds to Beech Aircraft Company on June 20, 1966, with no open items. During the manufacturing process, the support sleeve bottom assembly required material review action. Upon receipt from Simmonds, the probe was assembled into a welded assembly containing the pressure vessel plug, feed tubes, electrical conduit and filter body. This process was completed 24 June 1966.

The motor, fan, and heater assembly originally installed in tank XTA0008 was S/N F620230.

The fan heater probe was assembled by welding and brazing the individual component parts. At the Beech Aircraft Company appropriate dimensional and X-ray inspections were made. The heater elements were silver brazed to the central tube; the area was then cleaned and the fans were installed using shims as required to position the impeller properly with respect to the nozzle. After the heater wires were soldered, an assembly inspection, and dielectric and insulation resistance tests were performed on both heater and motor circuits. The motors were then operated in liquid nitrogen, and motor operation was verified by run-down testing.

The filter discs were installed on the filter body. A bubble check, leak checks, and proof pressure tests were then made and the polytetrafluoroethylene adapters and fill tubes were installed. After the quantity and temperature sensor wiring was pulled through the conduit, the quantity probe was welded to the pressure vessel plug. The probe assembly was installed in the pressure vessel (fig. 1-2), and the fan motor and heater wires were pulled through the conduit. The probe assembly was then screwed into the pressure vessel, the flange was welded to the pressure vessel flange, and visual and X-ray inspections were completed. After the wires were soldered to the connector, the connector assembly was welded to the end of the conduit. The coil housing, consisting of the vacuum pinch-off tube, rupture disc, and vac-ion pump bracket, was welded to the outer housing of the tank and was X-rayed. An insulator in the

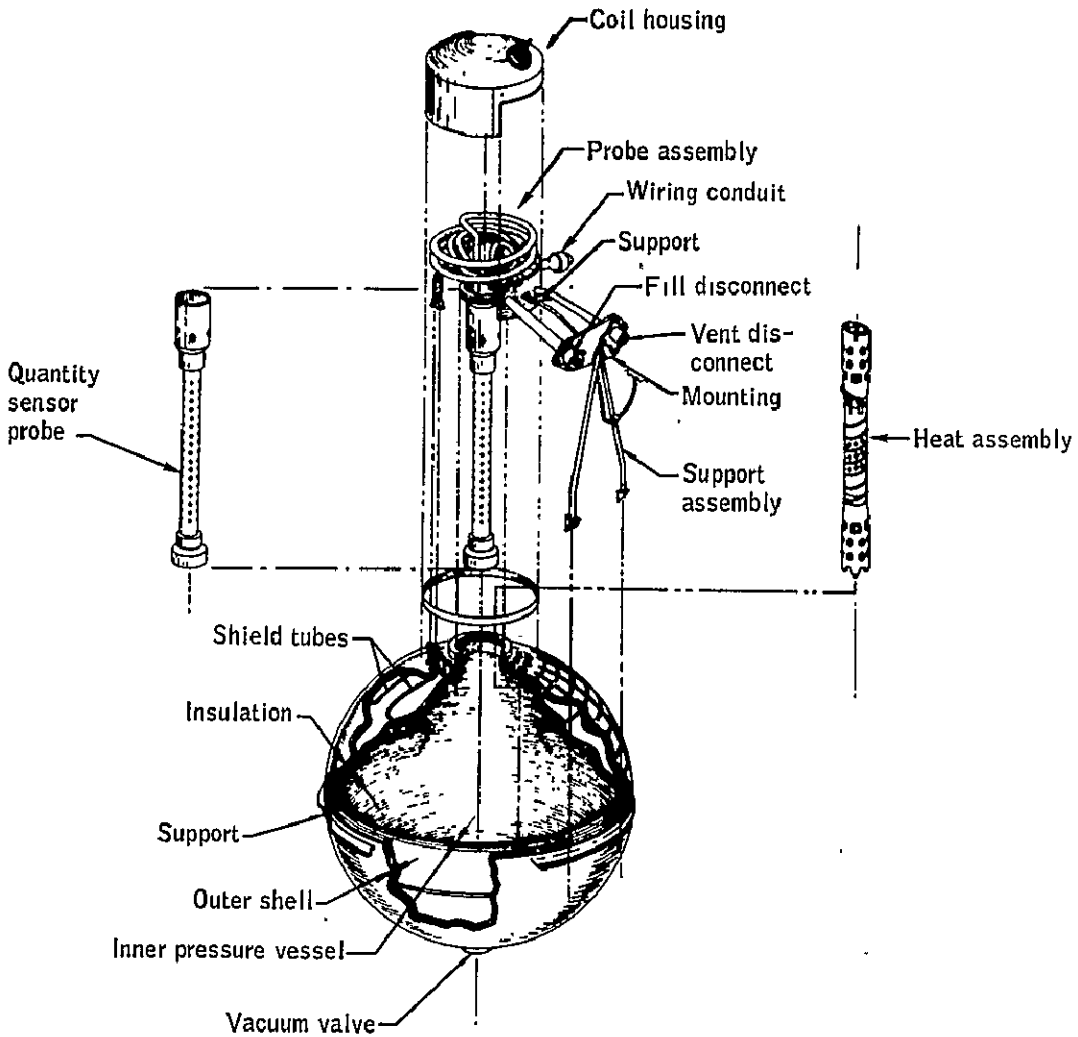


Figure 1-2.- Cryogenic oxygen tank assembly.

vac-ion pump assembly was found to be cracked due to the use of incorrect welding wire on 30 June. The insulator was replaced in early July. Vacuum acquisition was begun on July 25th.

This assembly contained motors serial numbers B648011 and B648016 (Globe S/N 04454157C19 and 7C24). Globe had experienced handling and fabrication problems with Ceroc-T (Teflon over ceramic) insulation on the 36 gage wire used for the stator winding. Handling in the stator winding process caused phase to phase shorts on a high percentage of two lots assembled by one individual.

Since the motors in this tank were from the suspect lot, vacuum acquisition was stopped and a special test was run; 12 hours operation in gas and 12 hours operation in $LN_2$. Motor currents were monitored and resistance measurements were made after each test phase. During this test the upper fan motor became noisy and drew excessive current. Post-test data indicated a phase to phase short circuit.

The motor fan heater assembly was replaced with S/N F620194 containing motors S/N B648022 and B648032 (Globe 7C30 and 7C41). Both of these motors were wound after implementation of new process controls and dielectric tests to avoid the earlier problems. These motors were received in early September 1966 and were used to replace two rejected motors S/N 648013 and 648017 (Globe S/N's 7C21 and 7C25).

The replacement of the probe in the tank was accomplished 9 September, 1966, with the assembly of the density probe and coil complete by 15 September. The second vacuum acquisition was started 28 Septemeber and completed 18 October 1966. The tank then moved to the test area for the end item acceptance test.

Several minor discrepancies during assembly were accepted without rework. These included oversize (.230 instead of .190 max.) holes in the electrical connector support, an oversize rivet hole (.137 instead of .132 max.) in the heater tube directly over the lower fan, and a small dimensional error in the clamp ring area of the pressure vessel. This was in an area not affecting the final machined part.

The initial end item acceptance test on 21 October 1967 indicated a heat leakage at min DQ/DM of .809 lb/hr. The specification requirement was .715 lb/hr. This test was repeated 24-26 October with a leak rate of .757 lb/hr.

Following this run, the pinch off tubes were cut off and the vacuum jacket reevacuated during the period from 29 December 1966 to 31 January 1967. A final acceptance test was run on 3 February 1967 resulting in a heat leak rate of .815 lb/hr at min DQ/DM. A special test at 100°F was run indicating an average flow rate of .726 lb/hr.

Oxygen tank XTA0008 was accepted by a waiver of the heat leak rate dated 19 April 1967 and was shipped to North American on 13 May 1967.

## 1.3 SUPPORTING DATA

This section contains a reference listing of the pertinent documentation reviewed in support of sections 1.2.

### 1.3.1 Discrepancies Not Reworked to Drawing

Pressure vessel.- MR C10846 out-of-tolerance condition on forging. O.K. per MR.

Outer shell.- MR C55461 weld porosity. MR removed vacuum valve and installed an alternate part.

Quantity probe.- No MR action at Beech.

Motor, fan, heater assembly.- MR B01142 Insulation scraped 1-3/4 inch from motor 648017. Returned to vendor.

MR B01140 Motor 648013 failed after 4 hours operation.

MR B01133 upper fan motor. Failed during screening test after installation in tank. Returned to vendor.

MR B01184 reworked tank to install new motor, fan heater assembly with new motors.

MR B00659 oversize rivet hole .132 should be .128 in heater tube assembly. O.K. per MR.

Tank assembly.- MR C43101 cracks in insulator alongside weld bead. Replaced.

MR C78515 oversize .230 should be .180 - .190 inch diameter. O.K. per MR.

MR B500016 flow rate higher than specification.

MR C21381 authorized standard repair parts for reevacuation of annulus.

NAA/NASA spec deviation CSM 0044 accepted tank with leak rate out of specification requirement.

### 1.3.2 Procedures

Beech BP 14346-1 rev C. End item acceptance on oxygen tank assembly.

Data bank file package 125. Tank assembly pictures of cut-away tank.

### 1.3.3 Other Documents

Data Bank file package 2 - End item data package oxygen tank S/N 10024 XTA0008.

Data bank file package 6 - Oxygen tank fan motors failure analysis report number 14510.

Data bank file package 14 - Simmonds probe end item data package.

Data bank file packages 27 and 28 - Globe data for S/N 7C30 and 7C41.

Data bank file package 34 - Globe engineering report 929

Data bank file package 56 - Failure reports against oxygen fan motors.

Data bank file package 90 - Beech inspection record oxygen tank S/N 10024 XTA0008.

# 2.0 CRYOGENIC SHELF INSTALLATION AT NORTH AMERICAN

## 2.1 GENERAL

A detailed review was made of $O_2$ tank no. 2, its installation onto the cryo shelf and into the spacecraft, and all testing experienced during the 25 month cycle at North American, Downey (fig. 2-1). This included all test checkout procedures (TCP's), discrepency reports (DR's), waivers, significant data taken during the TCP's and the fluid and gas sample reports. With the exception of a shock experienced by the shelf during its removal from S/C 106, possibly not adequately highlighted for consideration in the final decision to launch, all activities appeared nominal. All checkout procedures appeared adequate for testing to the level of detail required. Details of this incident and the subsequent analysis will be found in Para. 2.3 and 2.4. The tank gave no indication of damage prior to shipment to Kennedy Space Center.

## 2.2 CRYOGENIC OXYGEN SHELF HISTORY AT NR, DOWNEY, CALIF.

The assembly of oxygen shelf, P/N V37-454200-211, S/N 06362AAG3277, containing oxygen tanks, serial no. 10024XTA0009 in the number one position and serial no. 10024XTA0008 in the number two position was started at a sub-assembly level January 15, 1967.

The shelf structure had 5 discrepancies recorded which went through normal material review action. No discrepancies were noted against the pneumatic sub-assembly buildup containing the flowmeters, pressure switches and sensors, reactant control, check, and relief valves.

The electrical equipment installation had a number of discrepancies which were returned to print or were corrected by standard repair procedures. Two splices were added by material review action where pig-tail wiring from components was too short to reach the required terminals.

The heater control box also had a number of minor discrepancies which were returned to print and two material review actions; one accepts a condition of stress marks indicated on terminals of a diode board, while the other authorized changeout of damaged terminal boards.

All discrepancies against the cryo fan control box were corrected to print configuration.

PRECEDING PAGE BLANK NOT FILMED

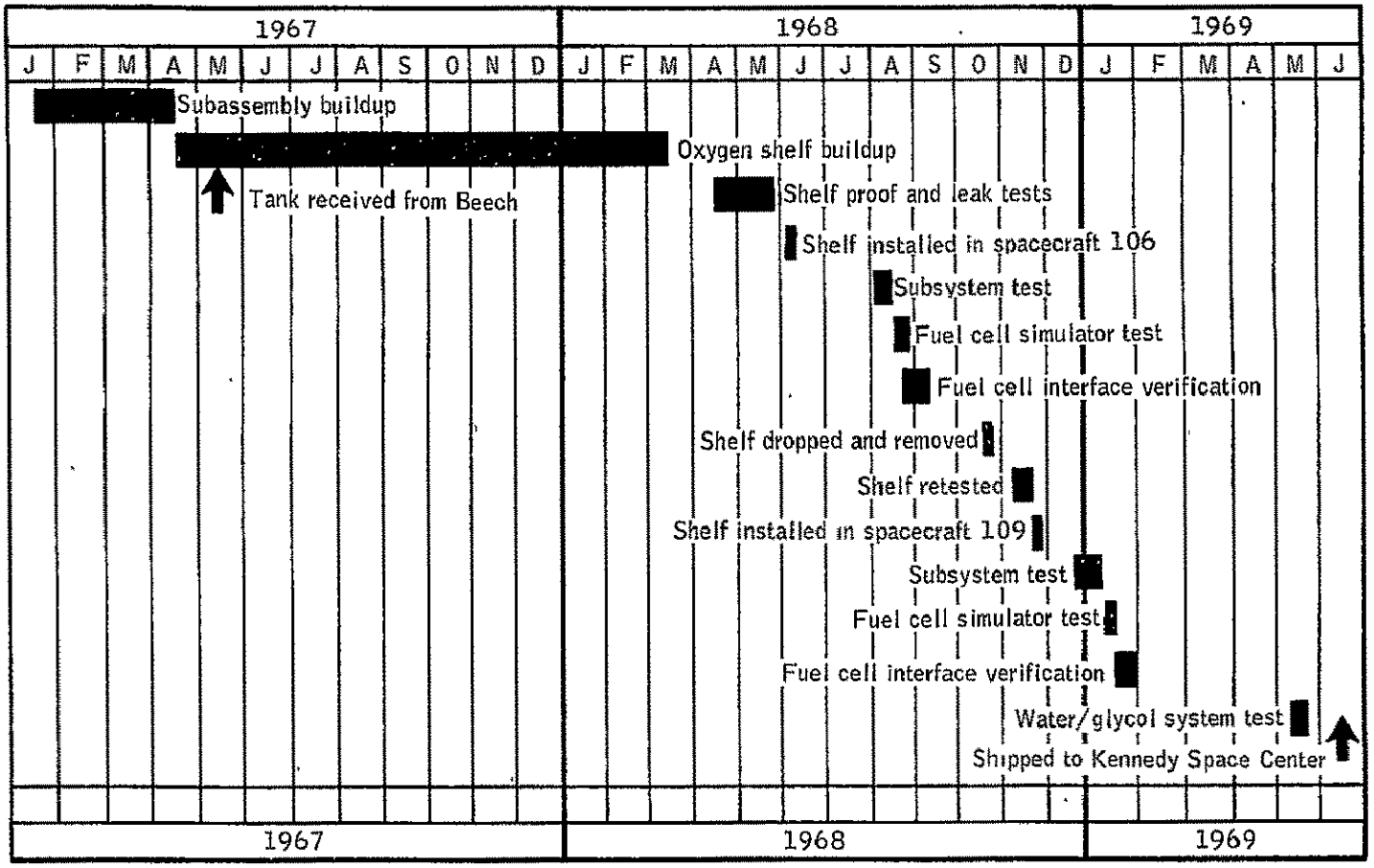


Figure 2-1.- Manufacturing and test flow for the oxygen shelf, at Downey.

These sub-assemblies were utilized in the build up of the total cryo shelf assembly which was started 14 April 1967. During initial build up several braze joints required re-heating to pass X-ray requirements. MR58134-1 was initiated on 3-11-68 to document an indentation on oxygen tank S/N 0008 .070 in. deep, 1.50 in. in diameter approximately 6 in. from the top edge of the flange. This was cleared by the material review board on 3-11-68 for unrestricted usage.

Following completion of the fabrication, OCP M-1014-8810A was run on the shelf during the period of 27 April to 13 May, 1968. This test verified integrity with a proof pressure test of 1262 PSIG, leak tested the system at 745 PSIG and functionally verified all fluid, mechanical, and electrical portions of the system.

Several DR's, A99881, A22062, A22061, A22064 and A22063, associated with the relief valves were reviewed. These were associated with conditions established to assure cleanliness of valve seats prior to relief valve functional testing and were corrected by procedural changes. No functional problems with relief valve operations were noted. One weld leak was repaired (ref. DR A22067). DR A41614 documented apparent corrosion around the welded seam where the lower pinch off tube flange attaches to the lower hemisphere of the outer shell. The area was cleaned and accepted for unrestricted use. DRA 25245 documented a ding on the -y side of $O_2$ tank 2 approximately 1 in. dia. by .005 in. deep. It was accepted by M. R. action.

The oxygen shelf was installed in S/C 106 on 4 June 1968. An installed sub-system test, OCP-P-1518, was conducted between 3 August and 8 August, 1968. This checkout included operation of reactant valves, heater controls, fan motors, and control and display and caution and warning functions. Interface plumbing was leak checked at 900 PSIA. Several minor discrepancies caused by procedural or ground support equipment problems were reviewed. None appear to be significant.

During the fuel cell simulator checkout (MA0706-1510) 14 to 29 Aug. 1968, to confirm readiness for fuel cell installation, the flowmeters on the oxygen shelf were checked out. No discrepancies were noted.

In August, a requirement was established to modify the vac-ion pumps to preclude arcs due to corona effects at altitude. To accomplish this modification per EO 702138 the oxygen shelf was removed from S/C 106.

During this removal on 21 Oct. 1968, a screw was not removed and a handling fixture failed, resulting in the shelf dropping back onto the mount.

The procedure for removing the oxygen shelf; No. 9EH-5000-3107R2 dated 27 May 1968 calls for the following basic steps.

1. Check that $LO_2$ tank protective covers are installed.

2. Position the $LO_2$ tank installation adapter 9EH-1009 (fig. 2-2) on the $LO_2$ tank shelf and engage the two thumb screws in the outer edge of the shelf to secure the adapter to the shelf.

3. Hoist the counter weighted sling, 9EH1275, with a bridge crane after assuring that the counter weights are positioned as marked for the no load condition.

4. Bolt the sling to the adapter at the attach plate with six bolts.

5. Adjust the counter weights (fig. 2-2) to the position marked for center of gravity with load attached.

6. Apply tension with bridge crane.

7. Disengage all connections between service module and $LO_2$ tank shelf.

8. Using bridge crane, raise tank shelf until it clears the service module structure.

9. Using bridge crane, slide shelf out to trunnion fixture.

According to the technicians and inspectors, all steps had proceded normally until step 9, when adapter 9EH1009 failed at a weld joint between two 3 inch 1/8 inch wall aluminum tubes (fig. 2-2 point D), allowing the shelf with a portion of the adapter attached, to drop back down onto the service module support angles. The distance of the drop was estimated at the time to be approximately 2 inches.

Investigation at the time brought to light the following discrepancies:

1. A 10-32 screw attaching tank no. 1 and the shelf assembly to a bracket between radial beams 3 and 4 had not been removed, leading to high moments on the 9EH1009 adapter.

2. The normal periodic proof load was 2 days overdue. This period was extended by NR and NASA QC for the emergency usage on this removal.

3. The normal load and proof load, 200 lb and 300 lb respectively, were low for the actual estimated shelf weight of 247 lbs.

4. The weld joint which failed had poor penetration and a lack of wetting with the cross section less than parent metal thickness in the tension area of the weld.

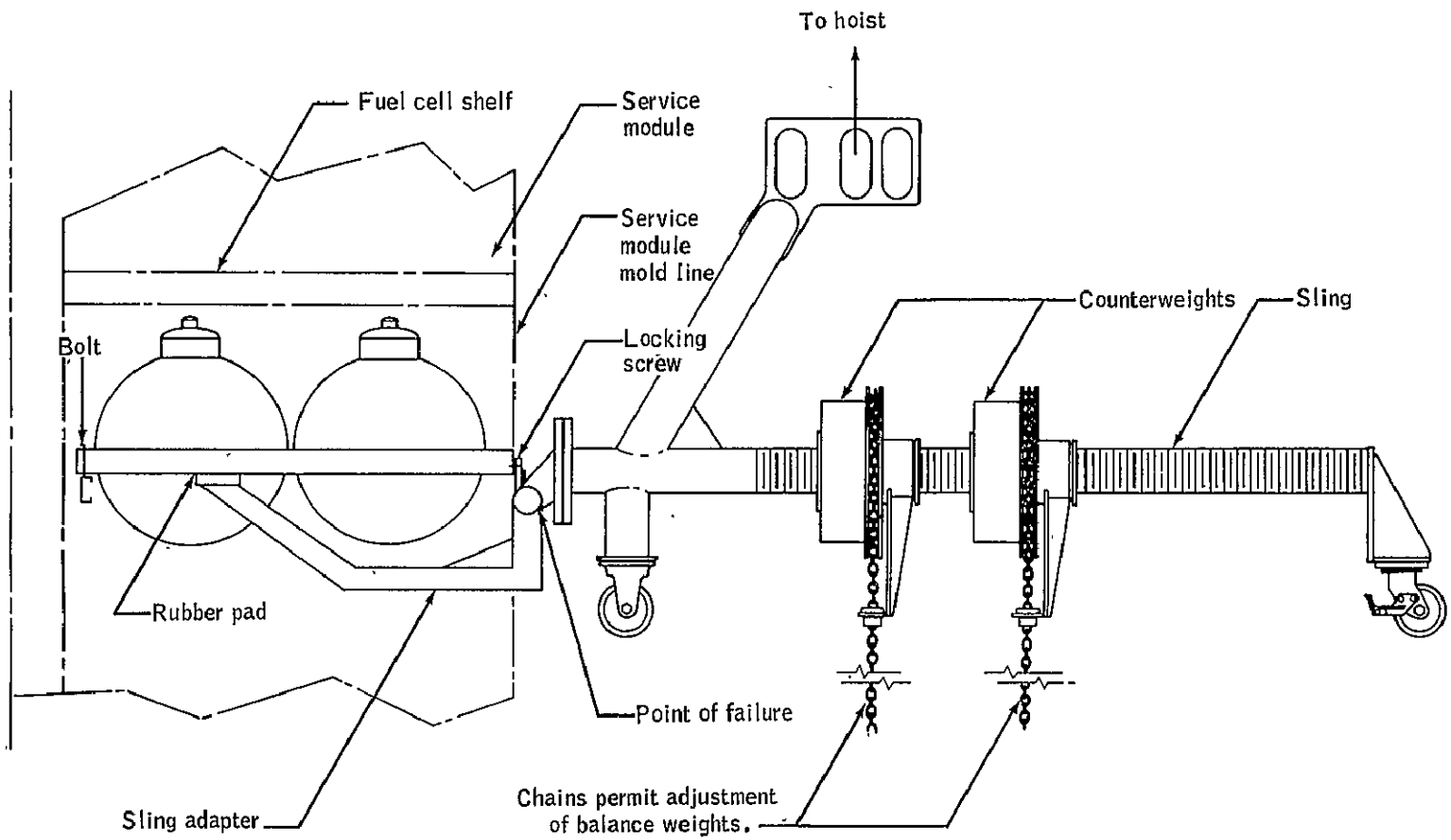


Figure 2-2.- Oxygen shelf and hoist assembly.

A review of the shelf and the service module supporting angles was made at that time to determine if any damage had been incurred. A ding in the lower face sheet of the fuel cell shelf was noted. The location of the ding coincides within 1 to 2 inches of a potential impact point of the pinch off tube cover of oxygen tank number two. This is documented on DR A80327 initiated 10-21-68, on DR A112436 dated 10-21-68 and on DR A140539, initiated 11-12-68 when the tank shelf was being prepared for retest after the modification.

No discrepancies were noted by inspection and the retest requirements to assure pressure vessel and system integrity were established on DR A 140539 with RASPO concurrance.

A corrective action request (CAR) (80327) was initiated to identify corrective action requirements which included the following items:

1. The procedure 9EH-5000-3107 was revised to specifically call out all structural attachments (ref. Rev. 3 dated Oct. 29, 1968).

2. The handling fixture was redesigned to add gussets to the critical joints. The proof load requirement was increased to 450 lbs with a rated load of 300 lbs.

3. Welds were X-rayed.

Subsequent to the Apollo 13 tank failure, a more detailed analysis (ref. para. 2.3) was made to estimate the shock loads imposed on oxygen tank no. 2 and to assess the potential for hidden damage inside the tank.

Following the modification of the vac-ion pumps and re-identification of the oxygen shelf to a -71, accomplished between 1 Nov. and 17 Nov., 1968, the shelf was retested to verify integrity as well as to verify the modifications.

This testing included proof pressures to 1276 PSI, external leakage tests and functional tests of pressure transducers and switches, thermal switches, and vac-ion pumps. Sequences not performed during the retest included:

A. Seq. 2.3 Fan motor functional check

2.4 and 2.5 Signal conditioner checks, density and temperature

2.11 Coupling leak check

2.12 Check valve internal leak check

2.13 Fuel cell reactant valve functional and leak check

2.14 Flowmeter functional test

These parameters were verified during the installed systems tests in building 290.

The only significant DR was DR A142412 which indicated possible oil contamination from facility lines. The GSE fill hoses were checked and found not to be contaminated, indicating that potential contaminants had not reached the S/C interfaces. This was further verified by the vent line samples taken during servicing operations at KSC. A review of the shelf testing showed that the only portions of the shelf test not repeated at this time were not associated with tank or system integrity or the vac-ion pump rework.

DR's 104283 and 104284 indicated an out of specification condition on the heater thermal switches. Review showed that, since the test was for functional verification only, stabilization periods were not required, resulting in temperature differences between the resistance element and the switches.

Following completion of the shelf retest, the shelf was installed in S/C 109 on Nov. 22, 1968.

During the installation, one line required rework to eliminate a structural interference and a tube joint on the line failed X-ray and required reheat.

Retest of the cryogenic shelf installed in S/C 109 per OCP P-1518 was accomplished during the first two weeks of January 1969. This test verified operation of shelf and tank functions through spacecraft controls.

A special retest of the tank pressure gages was run at the request of engineering to re-verify panel meter readings.

No significant anomalies were noted. Following completion of fuel cell simulator testing and overall testing of the spacecraft, S/C 109 was prepared for delivery to KSC, following a normal closeout inspection.

During this period, DR A150485 documented a .005 inch deep ding in a line to $O_2$ tank 2. This was checked for cracks with dye penetrant and was polished out. The spacecraft was shipped to KSC June 25, 1969.

## 2.3 SHELF DROP INCIDENT EVALUATION

The following paragraphs estimate the most probable sequence of events, investigate the dynamics, describe the mathematical model used, make comparisons with the tank qualification testing, and investigate the tank internal structure. It is concluded that the internal components should be adequate to withstand axial acceleration levels in excess of 100 g, and that the tank should not have experienced more than 12.7 g with a predominate frequency of 27.8 Hz.

The qualification testing did not provide a positive method of determining the damping between the tank and its internal components, however, the structural review revealed no critical items.

### 2.3.1 Handling Sequence

Since the records do not positively define the exact sequence of events, several sequences were postulated within the limits controlled by the available strength and the mass properties of the fixture.

Photographs of the failed weld do confirm that failure initiated in the weld at the top of the joint; such a failure is consistent with a bending moment which induces tension in the top fiber. An estimate of the strength of the section at the weld, based upon dimensions scaled from the photograph, yielded a minimum failing load of 8500 inch-lbs moment with an upper bound of 16 000 inch-lbs. The minimum value gives a positive margin of 16% (to failure) for the one-g balanced position of the assembly. Investigation of the mass properties of the handling fixture determined that the center of gravity shift was limited to approximately 10 inches (maximum possible counterweight movement).

Possible sequences are illustrated and numerically described in Figure 2-3. Case 1 postulated that the crane was raised excessively and thus over loaded the shelf assembly through contact with the fuel cell shelf. This sequence was excluded, however, because this loading reduces the bending moment from its initial value and tends to relieve the bearing pad forces which interface with the bottom of the shelf. If this performance were undetected and the forces were increased until failure, the failure would result from moment which induces tension on the bottom fiber rather than the top fiber as deduced from examination of the photographs.

Case 2 postulates that the crushing of the core of the fuel cell shelf acts as a constant load device and that the counterweight center of gravity is shifted in an attempt to level the oxygen shelf. This sequence requires

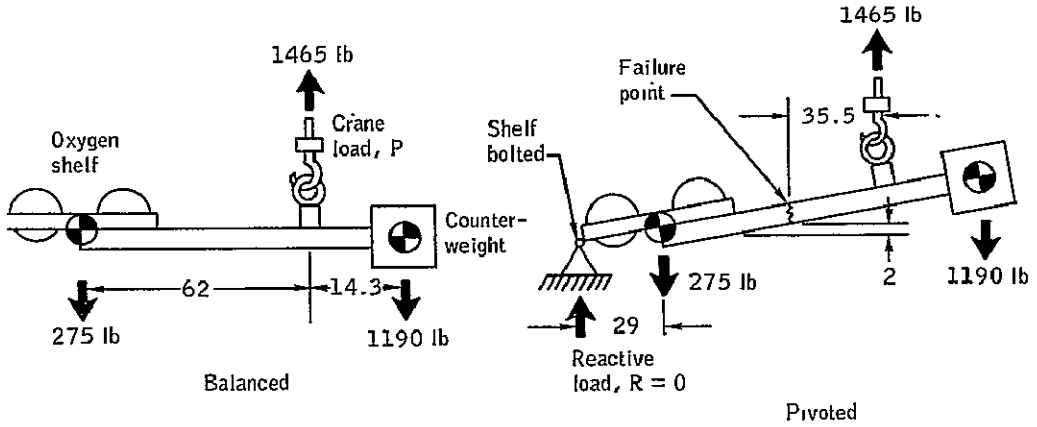


Load representations

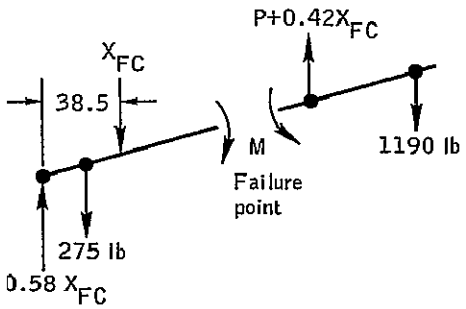


Case 1 - Fuel cell shelf contact

Assume a force, $X_{FC}$, exerted by fuel cell shelf.

For an $X_{FC} > 406$ lb, the ground support equipment bearing pads swing free: This loading condition reduces the moment at the failure point to 15 percent of its balanced one g value. i.e., M = 1110 in-lb.

Conclusion: Sequence excluded

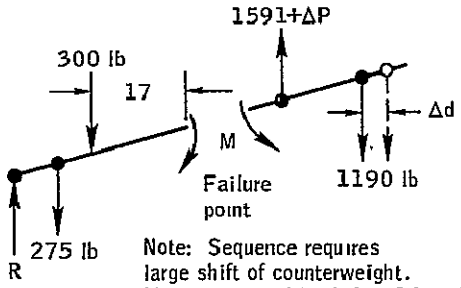


Note: Sequence requires large shift of counterweight. Maximum possible shift = 10 inches.

Case 2 - Counter weight shift and shelf contact

Assume shelf contact force to be constant 300 lb and counter weight C.G. adjusted Δd to balance loads
Moment, M, at failure point: 8500<M<16,000 in-lb

| M, in-lb | R, lb | ΔP, lb | Δd, in |
|---|---|---|---|
| 8500 | 70.3 | 103.7 | 7.9 |
| 10,000 | 43 | 131 | 10.0 |

Conclusion: Sequence unlikely

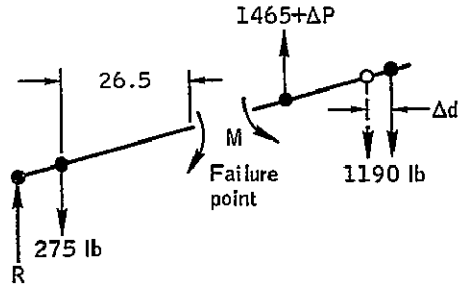


Case 3 - Counter weight shift

Moment, M, at failure point: 8500<M<16,000 in-lb
Counter weight C.G. adjusted to balance loads:
Maximum possible shift = 10 inches.

| M, in-lb | R, lb | ΔP, lb | Δd, in |
|---|---|---|---|
| 8500 | -22 | 22 | 1.7 |
| 14,500 | -131 | 131 | 10.0 |

Conclusion: Most probable sequence

Figure 2-3.- Shelf handling sequences.

very large movement of the counterweight center of gravity to produce moments consistent with the failure. For example, a shift of 10 inches in center of gravity requires that the counter weights be moved to the outboard stops; moving one counterweight only to achieve this configuration requires a shift of 29 inches. This sequence is considered unlikely.

Case 3 postulates adjustment of the counterweight center of gravity to attempt to level the assembly. As noted, this procedure requires less than a 2 inch shift of the counterweight center of gravity to achieve failure of the fixture. This sequence agrees with most of the witness statements and is considered the most probable.

### 2.3.2 Dynamics

Because of the ding in the underside of the fuel cell shelf, the dynamics of the oxygen tank shelf were considered.

Case I.- The rate at which the weld fails, as shown in figure 2-4, determines the displacement and velocity of the top of the tank. Calculated times greater than 0.1 second were required to produce an impact of the tank and the fuel cell shelf. This slow failure of the weld was considered improbable.

Case II.- A one-half scale layout of the configuration illustrated a potential mechanism for contact. The weld in question joins cylindrical sections and thus may constrain the counterweight fixture until the angular displacement allows complete separation. This was assumed and displacement calculations were performed assuming zero moment at the failed joint. Such an assumption is conservative and yields velocities at contact of 20 inches/second to 35 inches/second depending upon the shelf position at the time of failure.

Based upon the foregoing, calculations were performed to predict the transient dynamic response of the tank due to impact upon its supports. These were then adjusted to account for the strain energy stored in the fuel cell shelf and oxygen tank shelf for an impact which produces the observed ding. Hand calculations were then performed to estimate the response of the tank at the time of impact with the fuel cell shelf.

### 2.3.3 Mathematical Representation

A three dimensional, finite element mathematical representation of the $O_2$ shelf assembly was generated to predict the transient loads sustained. The model included structural idealizations of the bonded honeycomb shelf assembly, the number 1 and 2 tank assemblies, and that portion

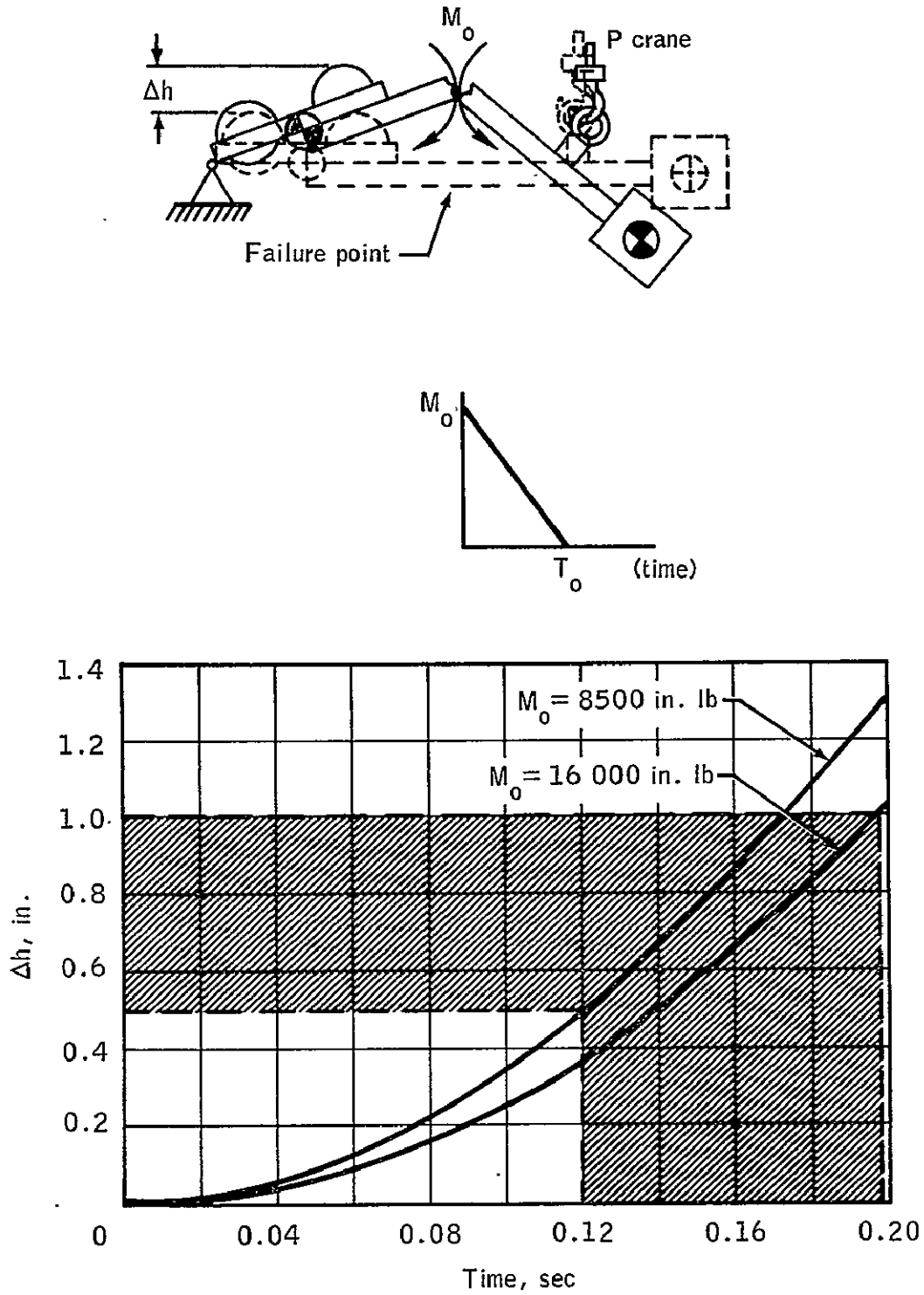


Figure 2-4.- Postfailure dynamics .

of GSE that remained attached to the shelf after the fixture failed. The sandwich portion of the shelf structural assembly was idealized by plate elements, which react loadings normal to the surface, with the chemically milled regions included by reducing the plate bending stiffness. The close-out members along the edges of the shelf and the tank cut-outs were idealized as beam elements. The handling fixture that remained with the shelf was modeled as a system of beam, bar, and torque tube elements. The radial beam stiffeners act as supports for the shelf and were represented by springs to ground.

The analytical description of the tank assemblies consisted of the inner and outer shells represented by generalized plate elements which provide both membrane, and plate stiffness. The load path between the inner and outer tank is unique in that the loads must be reacted by compression of the insulation material. To simulate this load path, the inner shell was attached to the outer shell in the lower hemisphere by means of links which react load normal to the shell. The complete structural idealization of the shelf assembly consisted of approximately 1400 elastic degrees of freedom.

Inertia loadings were assumed significant in the vertical axis only, and therefore only these terms were retained in the response analysis. Shelf structural weight and tank weights were appropriately distributed to respective displacement points. Weights of valves and electrical equipment on the shelf were assumed rigidly attached to the shelf. The weight of the tank insulation was distributed on the inner shell in the upper hemisphere and on the outer shell in the lower hemisphere. The quantity gaging probe and heater assemblies were assumed rigid and their weights were reacted at the top of the inner shell. Approximately 290 dynamic degrees of freedom were retained for the dynamic response calculations.

### 2.3.4 Analysis of Results

Three independent sets of assumptions and resulting initial conditions were specified and analyzed.

For the first case, the oxygen shelf was raised so that the pinch off tube cover was in contact with the fuel cell shelf and the oxygen shelf was allowed to free fall. The initial internal strain energy in the oxygen shelf was conservatively estimated and assumed to increase the velocity of the shelf at contact with the radial beam stiffeners. Results indicate a peak acceleration of 11.8 g's on the quantity gaging probe and heater assembly. Predominate frequency content was 27.8 hz, the fundamental frequency of the $O_2$ shelf in contact with the radial beam stiffeners.

The second case considered the transient response due to impact of the tank and the fuel cell shelf. Conservative estimates were made of the fuel cell shelf stiffness; relief due to crushing of the honeycomb was neglected. An impact velocity of 35 in/sec was assumed; such a velocity is conservative since it assumes an initial clearance of 2.5 inches (the shelf had not been lifted) and a pinned joint at the location of the failed weld. These assumptions and initial conditions yielded a peak response of the heater/probe assembly of 19.1 g with a predominate frequency of 33.6 hz.

MSC test (TPS-013-T-055) was run using a representative fuel cell shelf and vacuum pinch-off tube cap. For levels in excess of 7g, permanent deformation could be observed in the tank dome cover, thus limiting the upward shock experienced by oxygen tank 2.

For the third case, the strain energy stored in both the oxygen shelf and the fuel cell shelf was conservatively estimated. This energy was then assumed to increase the velocity at contact with the radial beam stiffeners. This condition resulted in 12.7 g. As in the first case, the predominant frequency was 27.8 hz.

### 2.3.5 Comparison with Quality Test Environment

The qualification test reports of the $O_2$ tank were reviewed to determine if the tank design had been previously exposed to acceleration levels comparable to those resulting from the shelf drop. Testing consisted of random vibration tests to simulate flight random environments, and sinusoidal sweeps from 10 to 2000 hz with approximately 1.0 g zero to peak input. The sweep rate was 1.0 octave per minute.

Accelerometers were not located within the tank during these tests so it is not possible to determine conclusively if the quantity gaging probe and heater assembly experienced these levels. The transient responses that occurred during the incident were primarily at a frequency of 27.8 hz — the natural frequency of the shelf assembly resting on the radial beam stiffeners.

Responses during the sinusoidal sweep testing are similar in nature to those predicted by the foregoing analysis, however, an accurate estimation of the damping of the tank assembly is required to predict the internal response levels achieved during the sinusoidal sweep tests. No data is available to estimate the damping.

### 2.3.6 Tank Structural Review

The structural assembly of the tank was reviewed to identify any vibration sensitive components. Particular attention was focused upon the quantity probe and heater assemblies. Structural analyses were performed of these assemblies. All components were found to be adequate for axial g levels in excess of 100 g.

Because of the detanking problems at KSC (ref. paras. 3.1.1 and 3.3) and the postulations concerning the condition of the fill tube plumbing at its interface with the quantity probe standpipe, the loads on the tube were reviewed. This assembly weighs approximately .03 pounds; at ±20 g the force exerted is ±0.6 of a pound. Conservative estimates of fluid loads (ref. para. 3.3.6.1.3) during filling or detanking are in excess of such forces by at least one order of magnitude. It is concluded, therefore, that the transient loading experienced by this tubing was considerably less severe than that expected during normal service.

## 2.4 SUPPORTING DATA

This section contains a reference listing of the pertinent documentation reviewed in support of sections 2.1 and 2.2.

### 2.4.1 Discrepancies Not Reworked to Drawing

Electrical Equipment Installation.-

| | |
|---|---|
| DR A44409<br>A44410 | Wires too short. Corrected by MR splices. |
| A58128<br>A58129<br>A58130<br>A58136 | Split grommets. Corrected by std. repair EL 1.1. |
| A71395<br>A71398 | Insulation damage corrected by std. repair EL 1.1. |

Shelf-Oxygen Tank.-

| | |
|---|---|
| DR A31572 | .135 gap between -7 angles. Ok per MR. |
| A414071 | Void. Rework per MR. |
| A392227 | Void. Ok per MR. |
| A428326<br>A435167 | Doubler interference. Reworked per MR. |

Heater Control Box.-

| | |
|---|---|
| DR A448021 | Stress marks on terminals of diode board. Ok per MR. |
| A18022 | Defective part replaced instead of reworked. Ok per MR. |

Shelf Buildup.-

| | |
|---|---|
| 410009 | |
| 410038 | |
| 410039 | |
| 409959 | Braze joints failed X-ray. Corrected by reheating. |
| A17874 | |
| A17881 | |
| A001181 | |
| A58134 | Dent in outer shell tank 0008 .070 in deep x 1.50 in. Ok per MR. |

Shelf Test for S/C 106 OCP 1014.-

| | |
|---|---|
| A25245 | Ding on - 4 side tank 0008 1 in dia. Ok per MR. |
| A22057 | Recessed pin on connector. Corrected by DR action. |
| A22063 | Flow rate during purge of relief valve low requirement changed. |
| A41614 | Suspect corrosion around tank weld seam. Cleaned and acceptable. |
| A55909 | Sect. 2.15.22 not performed due to lack of Rayco seals. Seals replaced and checked during later testing. |

Installation and Test in S/C 106.-

| | |
|---|---|
| DR No. 1 | Insulation cracked on yellow wire S48TK4P1. Damaged area wrapped with Mystic tape. |
| DRA102717 | Additional documentation of Rayco seal problem. See DR A55909. |

Shelf Removal from S/C 106.-

| | |
|---|---|
| A80327 | Documents the shelf dropping incident during removal from S/C 106 and the inspection requirements. |
| A112436 | Documents a ding in the under side of the fuel cell shelf on S/C 106 .021 in deep. |
| A140539 | Documents the inspection for damage and retest requirements for the oxygen shelf. |

Tank Rework for Vac-ion Pump Modification.-

| | |
|---|---|
| A106855 | Connector locking feature improper. Reworked by Cannon. |
| A104285 | Line to fuel cell bent. Leak check performed. |
| A102975 | Flow transducer connection leaking - reheated. |

Shelf Retest.-

| | |
|---|---|
| A104283,4 | Heater switches out of tolerance. Insufficient stabilization time allowed. |
| A104286 | Scratch on line. Polished out by MR. |
| A106866 | Bent line MR/reinspect. |
| A104287 | Shelf moved prior to part test review. |

S/C 109 Retest.-

| | |
|---|---|
| A94287 | Tube rides against structure. Reworked tube. |
| A55700 | Tube joint failed. X-ray. Reheated. |
| A137385 | Line leak. Seal replaced. |
| A150485 | Line ding, polished out by MR. |

### 2.4.2 Test Procedures and Specifications

| | |
|---|---|
| MAO 703-1014 | OCP M-1014-8810A - Shelf proof pressure leak check and functional checkout. |
| MAO 703-1016 | Service module tubing proof pressure and leak test. |
| MAO 703 1518 | OCP P 1518 - Cryogenic storage system installed system checkout. |
| MAO 706-1510 | Fuel cell simulator checkout. |
| 9EH-5000-3107R2 27 May 1968<br>9EH-5000-3107R3 29 May 1968 | Cryogenic shelf installation and removal procedure. |

### 2.4.3 Other Documentation

SSAD Books

Section 3.19 These books contain copies of as run procedures, DR's, MR's, waivers, and fluid and gas sample reports.

Data Bank File No. 149

| | |
|---|---|
| Apollo 13 Investigation Report, Oxygen shelf incident, Vol. I and II | Contains photographs, procedures, etc., pertaining to the drop. |

# 3.0 CRYOGENIC SHELF CHECKOUT AT KENNEDY SPACE CENTER

## 3.1 GENERAL

A detailed review was made of the behavior of oxygen tank 2 during its 9-1/2 month checkout cycle at the Kennedy Space Center. This included all Test Checkout Procedures (TCP's), discrepancy reports (DR's), waivers, significant data taken during the TCP's, and the fluid and gas sample analysis reports. With the exception of the inability to detank liquid oxygen in the normal manner during countdown demonstration test (CDDT), and the subsequent procedures utilized, all operations were nominal. All checkout procedures appeared adequate for testing to the level of detail required.

In addition to the historical summary, four specific areas: detanking, fan performance, quantity gaging checkout, and system purity, are discussed below. The tank gave no indication of pertinent damage prior to launch.

### 3.1.1 Inability to Detank

A review was made of all available facts pertinent to this incident; the history, the data taken, the theories developed, the technical and management personnel involved, and the rationale utilized to accept the tank for launch. This is presented extensively in section 3.3 together with the postflight analysis and testing conducted.

In general, liquid oxygen tank 2 could not be off loaded after its initial filling during countdown demonstration test. The problem was assumed to be due to missing or broken pieces, or to a tolerance buildup under cryogenic conditions, within the dog leg portion of the tank fill path (reference Figure 3-1).

The effect of this damage on the tank in-flight performance was judged to be inconsequential since all other aspects of tank performance were nominal. In addition, the available energy was determined to be minimal both from small Teflon particle fan impeller impacting and from probe plate-to-plate shorting by the inconel tube.

After numerous attempts with gaseous oxygen purges and higher expulsion pressures, the fluid was boiled off through the use of tank heaters and fans, assisted with pressure cycling. As established from the recorded data, the heater thermal switches did not open. There was no evidence of concern or consideration given to the possibility of internal wire damage resulting from overheat. There are no apparent specifications that prohibit this activity.

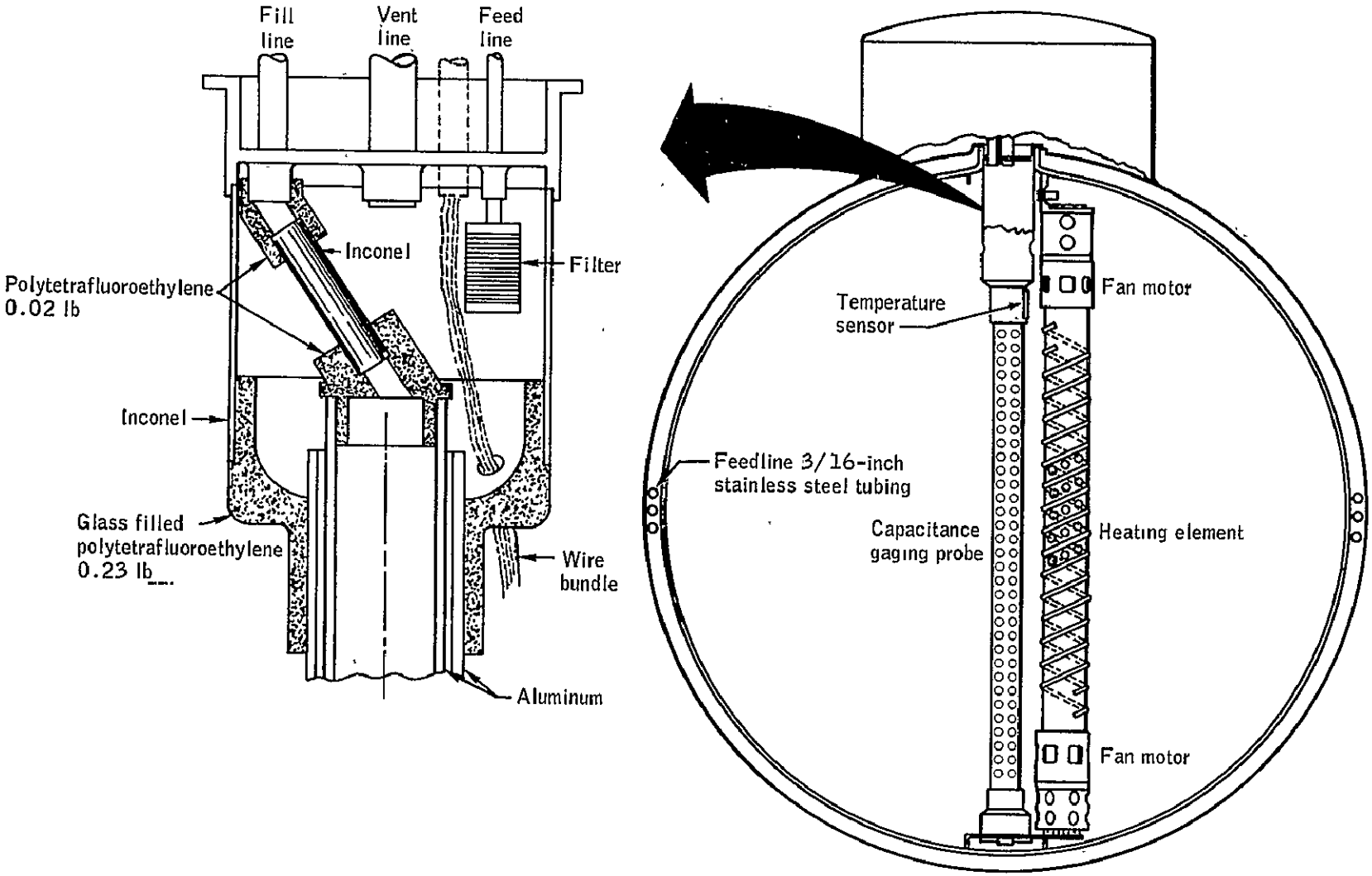


Figure 3-1.- Arrangement of components within oxygen tank.

The 2TV1 detanking problem, significant in the acceptance of the fill path gap theory, proved, upon close review to be only a difference in the time required to empty each tank, with both times being considered nominal. (Reference section 3.4)

During post launch testing (Ref. section 3.3.6) it was found that with ground power (65 V dc and 6 amps), the heater thermal switch contacts will weld closed in the initial opening attempt with currents as low as 2 amps. Continued application of heater power will produce temperatures of 900° F to 1000° F in the area where the lower fan wiring routes behind the heater element. Severe insulation damage results. In addition, fan motor case temperatures will reach 350° F. The type of functional tests performed after the detanking would not necessarily detect these conditions.

### 3.1.2 $O_2$ Tank Fan Motor Performance

Fan motor performance was evaluated continuously at Beech Aircraft, at North American-Downey, and at KSC. Prior to installation in the spacecraft, the voltage generated by the inertial coast down of each motor is displayed on an oscilloscope, the pattern examined, and the rundown time measured. After spacecraft installation, due to the service module wiring configuration, oscillograph traces are made of AC phase B while both fan motors are rundown in parallel. These are examined for pattern only.

All performance data pertinent to oxygen tank 2 (SN XTA 0008) was examined and compared with oxygen tank 1 (XTA 0009) and previous data available from S/C 106 and 108. No anomalies were detectable. Of 13 oscillograph traces examined, 7 showed both motors in synchronization during coast while the remaining 6 showed similar irregular nodal patterns produced by summation of the frequencies from each motor. Both types of patterns are considered normal since generators in parallel tend to feed energy to each other and remain in synchronization. All fan data examined was essentially identical.

Test records were reviewed during all fan motor operations at KSC for any indications of unusual AC bus transients. Thirty periods of time were found when oxygen tank 2 fan were powered. No transients were found except those normally associated with fan motor turn-on and turn-off. Fan motor performance was considered normal.

### 3.1.3 $O_2$ Quantity Gaging System Checkout

An extensive data review of the behavior of the $O_2$ quantity gaging system was conducted. The system was powered in five separate tests over the 9-1/2 months period at KSC for a total of 167 hours, 8 minutes, and coincident with 28 fan on/off cycles over the 17 day period of CDDT and launch count.

Throughout these tests, the gaging system in tank no. 2 exhibited less sensitivity to noise and transients than did that in tank no. 1. Normal transients of from 1-4 percent were visible with most of the fan switching.

No abnormal behavior of the quantity gaging system was evident prior to launch.

### 3.1.4 $O_2$ System Purity

The procedures used for liquid and gas servicing were examined together with the laboratory sample reports used to certify purity both in the test complex and in the fluid media being introduced. A summary of these procedures along with the sample results can be found in paragraph 3.4.2.

A basic assumption is made that significant impurities (helium, nitrogen hydrocarbons) will be detectable in the liquid overflow from the tank, and that the particulate size can be adequately controlled by the extensively qualified Wintec filter in the inlet line. Further assurance is obtained by maintaining the security of each test complex with a gaseous pad pressure and by introducing only sampled, certified media.

All procedures appear to have been followed with no waivers required. In addition, the inlet line filter was examined by the vendor Wintec. The bubble point correlated to an equivalent pore diameter size of 9.4 microns, with no evidence of contamination detrimental to cryo system operation.

## 3.2 OXYGEN SHELF HISTORY AT KSC

The service module is received at KSC (fig. 3-2) with a pad pressure of 3-5 psi nitrogen. This remains until the initial leak checks are accomplished. During periods between tank tests, a pad pressure using helium is maintained. Pressures used are approximately 3 psi in the altitude chamber and until first testing at Pad 39, and then 80 psia thereafter. Oxygen is retained between countdown demonstration and launch count.

The following paragraphs delineate the specific testing involving oxygen tank No. 2 and adjacent pertinent areas.

TCP 3063 - Service Module Move and Mate Preps.- Sector IV panel (SM-2) was removed and the A34-380 pressure operated disconnect (POD) support bracket and cryo tank No. 2 protective cover were installed. The fuel cell/cryo system receiving inspection disclosed no significant discrepancies.

TCP3071 - CSM Mate.- Oxygen tank No. 1, and plumbing associated with the command module ECS system, were pressurized to 900 psi (fig. 3-3) with helium for 1 hour and 20 minutes to leak check the CM/SM interface connections. No discrepancies were noted associated with either the oxygen system or the prior facility validation TPS (GS-088-1-473).

TCP 0070 - Abbreviated Combined Systems Test, July 15, 1969 to July 17, 1969.- A leak check of the pneumatic operated disconnects (POD) was run using helium at 108 psia in tank No. 1 and 94 psia in tank No. 2 (fig. 3-3).

During fuel cell leak and functional tests, tank No. 2 was pressurized to 1025 psia, establishing relief valve cracking pressure, decreased to below 870 psia, and then increased to 954 psia to verify pressure switch operation.

The vac-ion pump verification tests for oxygen tank No. 1 were inconclusive and the test was rerun. The DC-DC converter was found to be faulty (IDR 014) and was replaced. Retest was accomplished during the spacecraft power up for TCP 0048. No other discrepancies were noted on the oxygen shelf. Hydrogen tank No. 2 pressure transducer failed (IDR 033). The defective transducer remained installed in the spacecraft and a replacement transducer was installed in the $H_2$ tank No. 2 supply line, under the $H_2$ shelf assembly, per TPS-S/C-109-SC042. Retest was accomplished per TPS-SC-109-SC045 during TCP-0048, simulated altitude test.

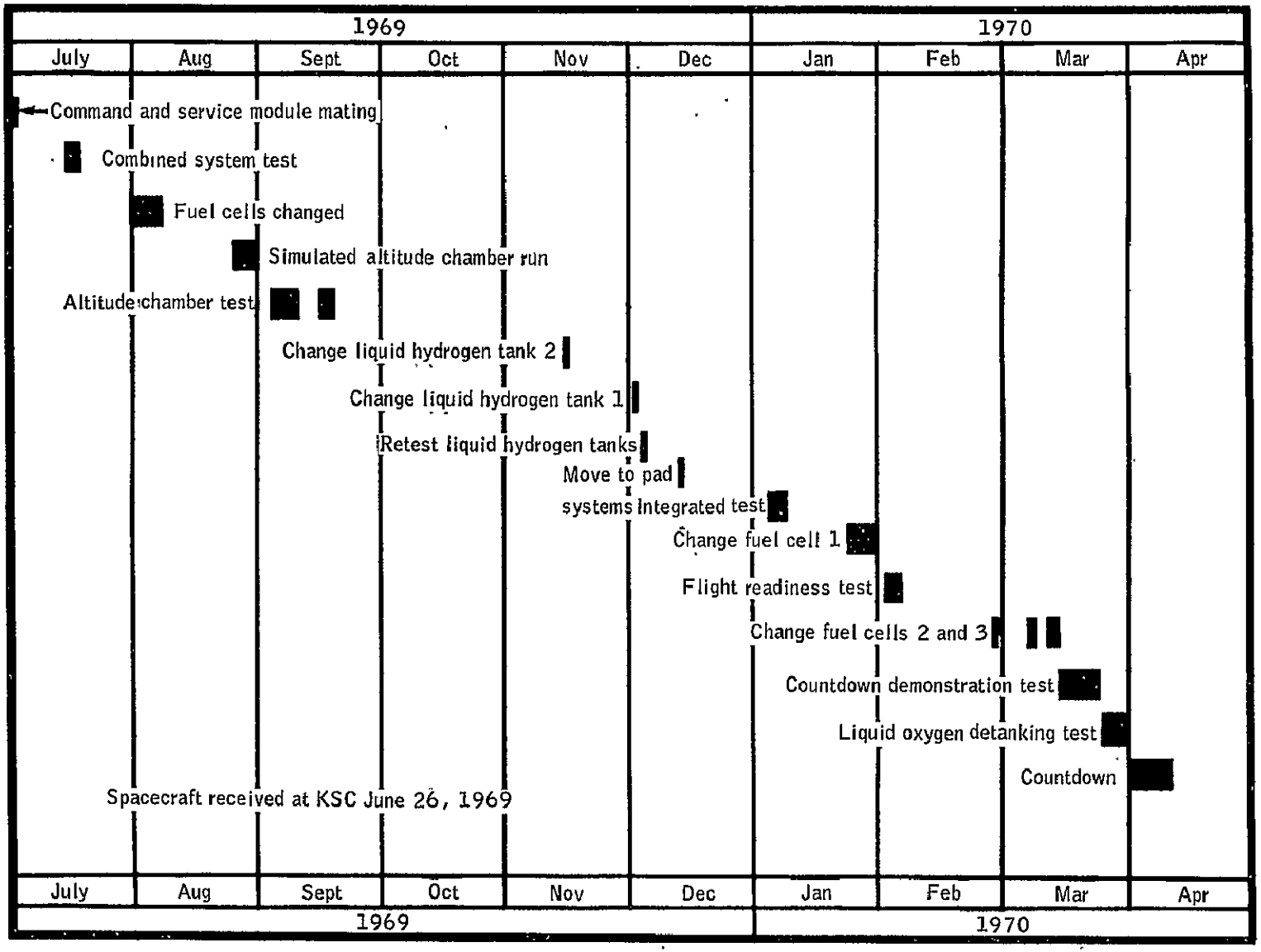


Figure 3-2.- Test flow for the oxygen shelf at KSC.

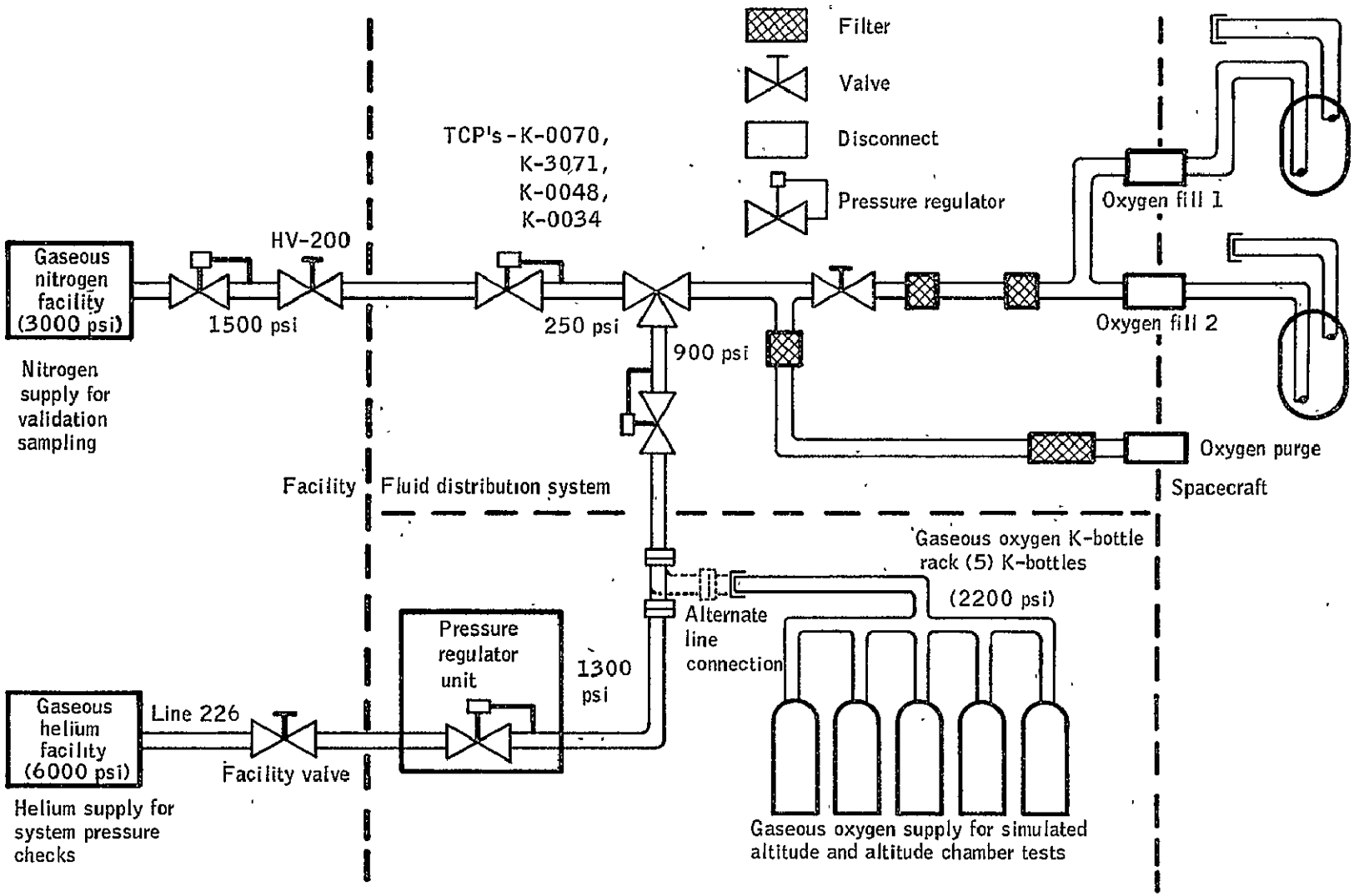


Figure 3-3.- Oxygen servicing facility (MSOB).

DR 109 - S/C 154 - First Fuel Cell Change - July 18, 1969, to August 7, 1969.- All fuel cells were replaced to install block 1 water glycol bypass valves. Block II valve operation inflight had disclosed that the valve was sensitive to particle contamination generated in the system. The post installation fuel cell interface leak checks did not pressurize the cryo tanks. Precaution, such as use of protective covers, was used to avoid damage to cryo tankage during this work and no discrepancy reports were initiated.

TCP 0048 - Simulated Altitude (Chamber Test) - August 13 - August 29, 1969.- Oxygen for the environmental control system was furnished through port OP. The gas flow did not pressurize the tanks (fig. 3-3).

TCP 0034 - Altitude Chamber Test - September 5 to September 16, 1969.- GSE was used to supply oxygen to the environmental control systems through oxygen purge port (OP) for three altitude runs on 9-5 (unmanned), 9-9 and 9-16 (fig. 3-3). During these runs, tank No. 1 was pressurized to 954, 954, and 930 psia but tank No. 2 was isolated. No anomalies were encountered during this operation.

TPS SC-109-SC-118, SC-119 and DR SC-109 - SC0325 - October 9, 1969 to December 1969.- During the launch count of SC 108, hydrogen tank No. 2 failed when loaded with liquid hydrogen. The failure was due to a leak in a bi-metal joint at the top of the tank. A decision to replace this tank with hydrogen tank No. 2 from S/C 109 initiated the removal of SM-2 door from S/C 109 per TPS SC 109 - SC 118 and the removal of the hydrogen tank No. 2 per TPS SC 109 - SC 119. A later decision to replace S/C 109 hydrogen tank No. 1 resulted in again removing SM-2, replacing the tank, and reinstalling SM-2 per DR SC 109 - SC 0325. During this task no discrepancies were noted involving the oxygen tanks.

TCP 0005 - Integrated Test With Launch Vehicle Simulator - January 5, 1970 to January 9, 1970.- In preparation for fuel cell activation, the cryo tanks were pressurized with helium to 68 psia for a leak check of the POD's. The cryo tanks were then evacuated to less than 5 mm for 2 hours, followed by pressurization to approximately 80 psia with hydrogen and oxygen gas. The tanks remained at this pressure during fuel cell pressurization since the cells were supplied gas from GSE through the oxygen purge port OP (fig. 3-4). The instrumentation was verified, and fan motor rundown tests verified both motors were operating for all cryo tanks.

During the fuel cell test, fuel cell No. 1 hydrogen regulated pressure transducer failed (DR SC 109-SC 0366). The transducer was replaced subsequent to fuel cell shutdown. It was also observed that fuel cell No. 1 load sharing was at a seven ampere variance with fuel cells No. 2 and 3. In addition, the current from fuel cell No. 1 was

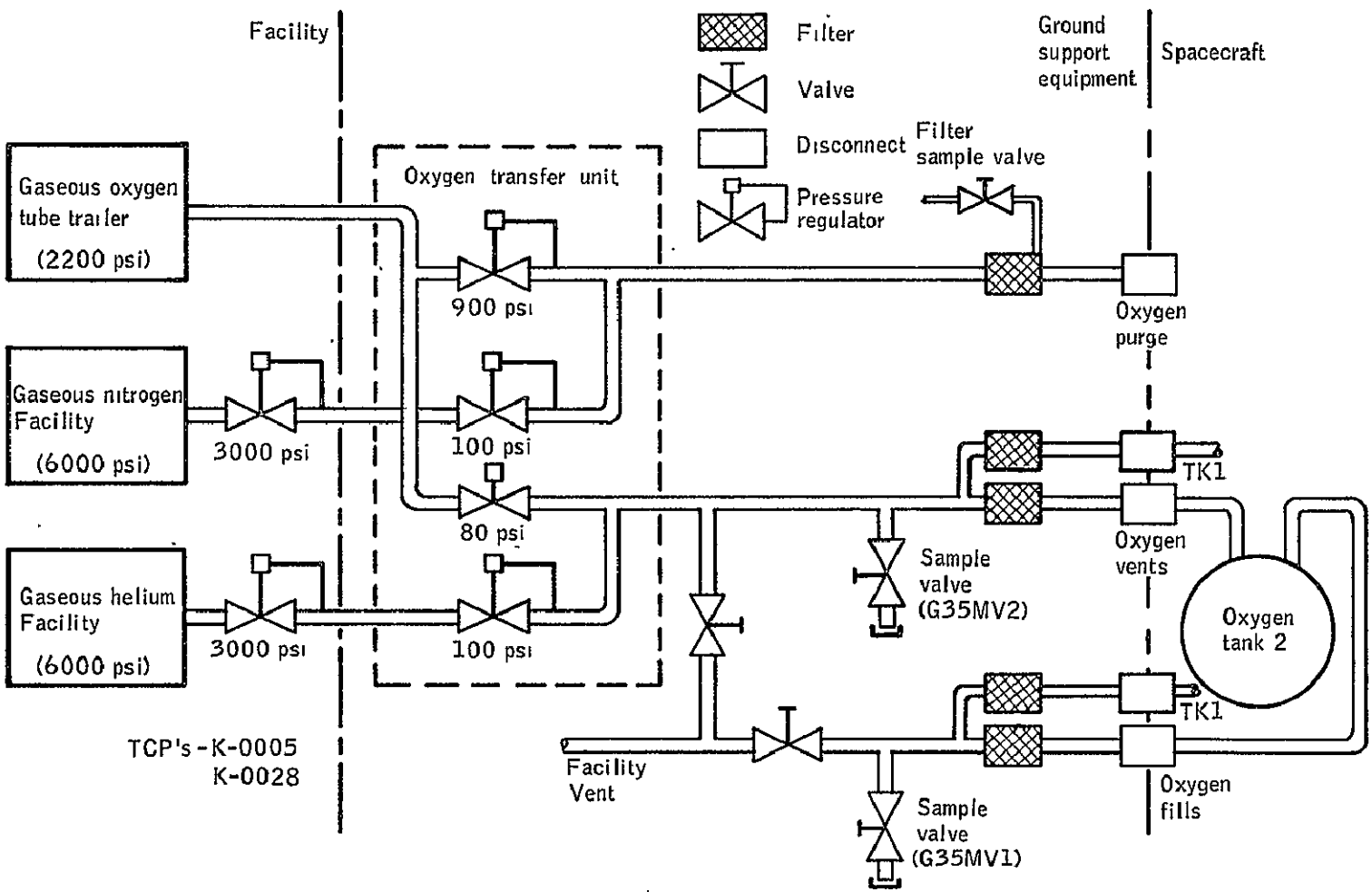


Figure 3-4.- Oxygen servicing facility, launch complex 39.

fluctuating approximately 7 amperes in a random cyclic fashion when under a constant load (DR S/C 109-SC0387). The problem was isolated to fuel cell No. 1. During the above, no anomalies were noted in the oxygen system, the tanks, or the associated test complex.

DR SC-109-SC 380 January 20 to January 29, 1970.- Fuel cell No. 1 was replaced due to the anomaly noted. During its removal and replacement, DR's SC 109-SC 0373 (incorrectly inserted pin in connector P62) and SC 109-SC 0374 (a shiny first thread on connector J1 which indicated the anodizing had been removed) were initiated against fuel cell No. 2. P62 was repaired by inserting the pin further into the lock position, with J1 accepted "as-is" for flight. No anomalies were noted for the oxygen shelf during the fuel cell 1 replacement.

TCP 0028 - Flight Readiness Test - January 26 to February 2, 1970.- Operations during this test were similar to those for TCP 0005 except that the fan motor checks were not planned. POD leak checks were required to validate the installation after SM 2 door removal for fuel cell changeout. Vacuum and pressure cycles were the same as for TCP 0005. The evacuation was followed with tank pressurization to approximately 80 psia with oxygen and hydrogen gas. All three fuel cells were activated and all operated normally.

TCP 0028 - Flight Readiness Test Re-Run - February 18-27, 1970.- ECS oxygen was supplied through the purge port without pressurizing the oxygen tanks.

No anomalies were noted for the oxygen shelf during this activity.

TCP 5127 (EPS Water Glycol Servicing and Compressibility) and DR SC 109-SC 0441. February 23 to March 8, 1970.- This accomplished a volume exchange of the EPS Water Glycol system within the required 45 days prior to launch. During the volume exchange a pressure increase was not observed when fuel cell No. 2 water glycol pump was turned on. Subsequent tests showed that the pump exhibited slow starting characteristics (DR SC 109-SC 0441). Due to this, fuel cells No. 2 and 3 were replaced. It was necessary to remove fuel cell No. 3 to have access to No. 2 in the rear of the SM bay. Interface leak checks of the fuel cells were conducted by pressurizing through the oxygen and hydrogen purge port.

TCP 0007 - Countdown Demonstration - March 16 to March 19, 1970.- POD leak checks were again performed with 80 psia gaseous helium to validate the final installation after SM 2 removal. Fuel cells No. 2 and No. 3 were activated, resulting in a vacuum cycle of the cryo tanks, followed by pressurization to approximately 80 psia with oxygen and hydrogen. Moisture samples were taken from the tanks and verified to be less than 25 ppm (oxygen tanks 1 and 2 read less than 2 ppm). This was accomplished by pressurizing the tanks with oxygen and hydrogen gas to 80 psia through

the vent line, venting the tanks back through the vent lines and then obtaining a moisture sample at the vent line sample valve . The fuel cell activation and deactivation was completed successfully in the precount.

During midcount, the spacecraft was serviced with liquid hydrogen and liquid oxygen (fig 3-5). In preparation for this the portable dewars had been serviced, (fig. 3-6) sampled, and delivered to the test complex (reference section 3.1.4 - System Purity). Immediately prior to hydrogen servicing all quantity probes were activated. During hydrogen loading the quantity measurement SC 0032Q for oxygen tank number one showed random fluctuations of approximately ten percent. This occurred for 22 minutes duration (DR SC 109-DR 0521). A detail review was conducted but no cause for this condition could be found. The sample rate of once per second for the measurement made any correlation to noise difficult. The quantity measurement for hydrogen tank number one, and the temperature measurements for hydrogen tank number one and two, powered through the same circuit breaker, did not experience the problem. This measurement remained slightly noisy, but functional throughout the remainder of the testing, and was accepted for launch.

Immediately after hydrogen servicing, the $LH_2$ GSE was secured, and the hookup of the $LO_2$ dewar and purging of the oxygen fill system performed. Oxygen was then serviced (reference section 3.4.2). Flow rate during oxygen servicing was about 25 pounds per minute (both tanks filled in parallel) with a dewar pressure of approximately 45 psia. During servicing the tank pressures read approximately 32 psia. Oxygen loading was normal although during the initial line purges a regulator which pressures the dewar, failed closed and had to be replaced. Heater checks after servicing were completed with no abnormalities. The oxygen tanks were pressurized to 331 psia during the heater test. All purity samples taken during loading, both from the dewar and the tank vent system, met specification (reference section 3.4.2.1).

Following these operations, hydrogen offloading and a detanking to approximately 60 percent for the oxygen system was planned. (Oxygen tanks are normally left partially filled to support the ECS system during wet and dry CDDT.) Hydrogen deservicing was satisfactorily completed. During the oxygen quantity adjust, oxygen tank 2 did not detank normally. A separate summary of this detanking problem and the related operations will be found in section 3.3. The problem was documented on DR GS 132-1-1735 (IDR 023) and DR SC 109-SC-0512. During the recycle period between CDDT and launch count, fan rundown tests were performed and indicated satisfactory operation of all fans.

<u>TCP 0007 - Countdown - April 8 to April 11, 1970</u>.- At the beginning of the countdown, the cryogenic and fuel cell systems were in the following configuration: The fuel cell reactant systems were pressurized to 28 psia with reactant gas (left from the activation in CDDT to maintain system

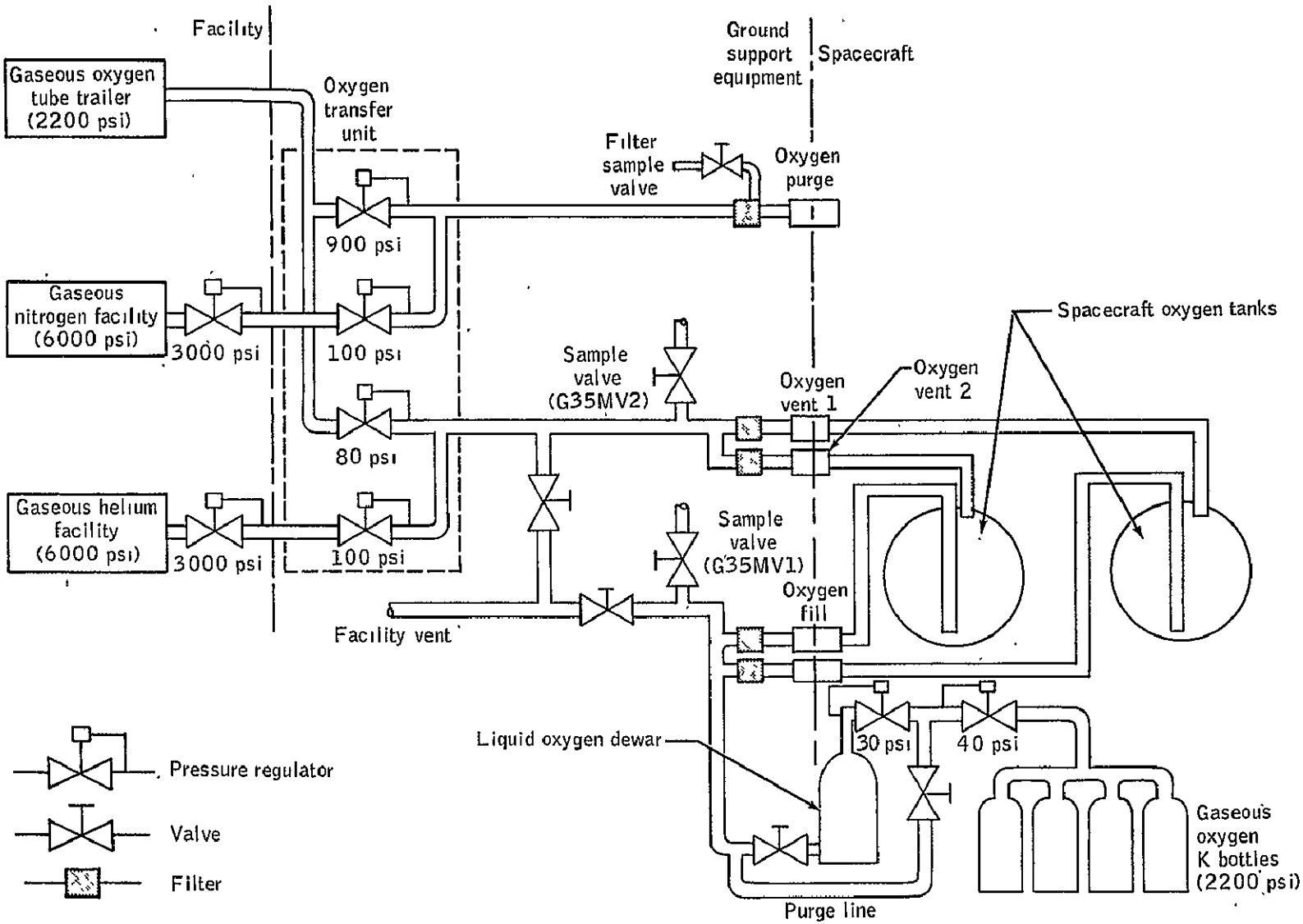


Figure 3-5.- Liquid oxygen servicing (Launch complex 39).

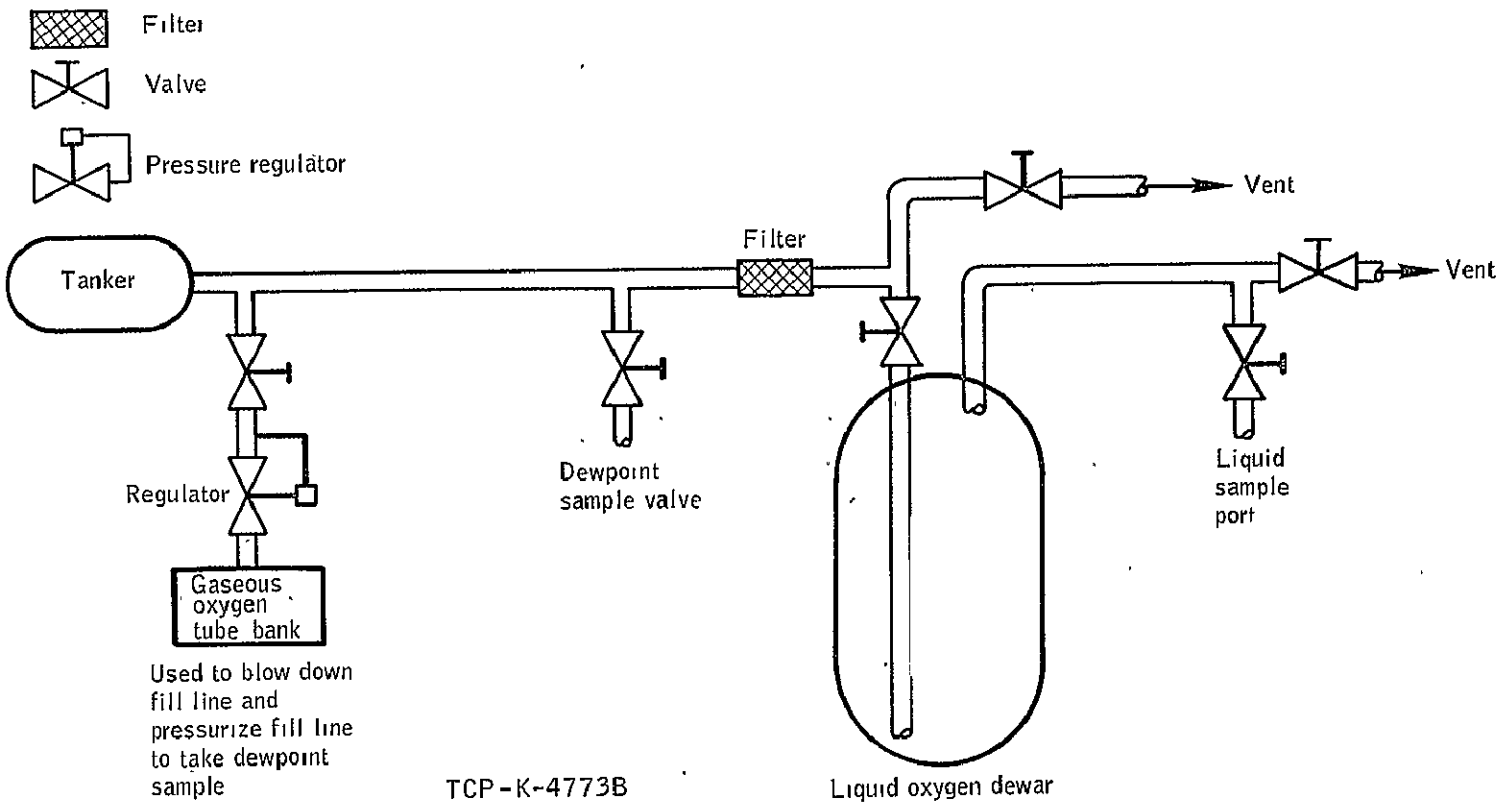


Figure 3-6.- Dewar servicing configuration.

integrity). The oxygen and hydrogen tanks were pressurized to 80 psia with oxygen and hydrogen gas from the CDDT operations. The Ground Support Equipment (GSE) lines were connected to the spacecraft and had been evacuated, pulse purged, and then pressurized with reactant gas to 80 psia. The pressure operated disconnects had been leaked checked at 80 psia with reactant gas. All samples taken from the GSE were within specification.

The first activities began at 1500 hours on April 8, 1970. A dew point sample of both the $LO_2$ and $LH_2$ tanks were taken. Both systems met the 25 ppm requirement (oxygen tanks 1 and 2 read less than 2 ppm). Following fuel cell activation and calibration, hydrogen and oxygen were serviced as in CDDT. Servicing was normal with the exception that $LH_2$ tank number 1 did not meet the 99 percent minimum loading requirement. 98.7 percent was considered acceptable and DR SC 109-SC 0537 was closed by waiver number SC 109-PO-020. After servicing, a decay in the $LO_2$ tank number 2 pressure indicated that a leak existed (DR SC 109-SC 0538). All POD's were removed from both $LO_2$ tanks, and flight caps installed to stop the leak prior to pressurization. (Normal procedure is to disconnect and install the flight caps after pressurization.) GSE heater power was supplied, the $LO_2$ tanks pressurized to approximately 940 psia, and the hydrogen tanks to approximately 235 psia. Fan motor checks were then made. Performance was nominal. POD's were then removed from the $LH_2$ tanks and final leak checks performed on the spacecraft POD's. No leaks were found.

After $LO_2$ servicing fuel cell number 1 was placed on Bus A (approximately 20 ampere load) to minimize the usage of $LH_2$. (A constant flow from the tanks equal to the boil off rate results in minimum usage.) At approximately T-4 hours all fuel cells were placed on the busses, fuel cells 1 and 2 on Bus A and fuel cell 3 on Bus B. The cells then supplied the complete spacecraft load from this period through launch.

## 3.3 DETANKING INCIDENT AND EVALUATION

The following chronology has been constructed from the best recollections of the personnel involved. No discussions could be found between KSC personnel and other agencies specifically on the advisability of utilizing tank heaters for boil off. NR Downey personnel remember an awareness of this intent and of being so advised after the fact. Beech personnel have no such recollection.

### 3.3.1 Description of the Problem

On Monday, March 23, 1970, at 10 PM EST, following completion of the normal liquid oxygen loading sequence, console operators at KSC were unable to off-load LOX Tank No. 2. The sequence at the time called for a reduction in quantity (both tanks) to approximately 60% to provide astronaut breathing oxygen for the countdown demonstration test in progress. Fluid was to be removed in the normal manner through the tank fill line by adjusting the facility gaseous oxygen expulsion pressure to 80 psia, opening the fill line pressure operated disconnect valve (POD), and permitting the tank to be pressurized through its vent line.

In the ten-minute period required by tank no. 1, the quantity in tank no. 2 had decreased to only 96% (fig. 3-7). Several cycles were attempted to insure no stuck valves.

Interim Discrepancy Report (IDR) No. 23 was then initiated. (An IDR is the normal method of officially documenting all anomalies found during testing when the problem cannot be specifically isolated without further trouble-shooting). At that time, moisture was believed to be present in the ground support equipment (GSE) since ten previous spacecraft had been successfully detanked.

The NR and NASA console operators then requested permission from their respective supervisors to leave the oxygen in the tank, proceed with CDDT, and troubleshoot when the schedule permitted.

### 3.3.2 Ground Support Equipment (GSE) Investigation

Tuesday morning, March 24, both NR and NASA local management were apprised of the situation. An engineering group was formed to plan and execute the troubleshooting. The tanking/detanking procedure was to be reviewed, together with the moisture analysis sample reports; the inlet line filter was to be removed; X-rayed for a possible collapsed internal element, and then returned to the vendor (Wintec) for analysis; the POD was to be checked for proper actuation, both at ambient and at cryogenic temperatures; and the pad crew was to verify both the controlling solenoid valve and its pneumatic pressure supply. NR-KSC engineering personnel reported that the record books, reviewed prior to the flight readiness review (FRR) showed nothing significant. The Downey "shelf drop" DR in the cryo shelf record book, transferred from spacecraft 106, was not remembered.

By Tuesday evening, both the POD and the filter had been disconnected from the lines on the Mobile Service Structure (MSS) and returned to the Malfunction Detection Laboratory. The filter had been X-rayed and sent to Wintec, and pad personnel had assured proper operation of the pneumatic supply, the POD actuation valve, and all associated flex hoses.

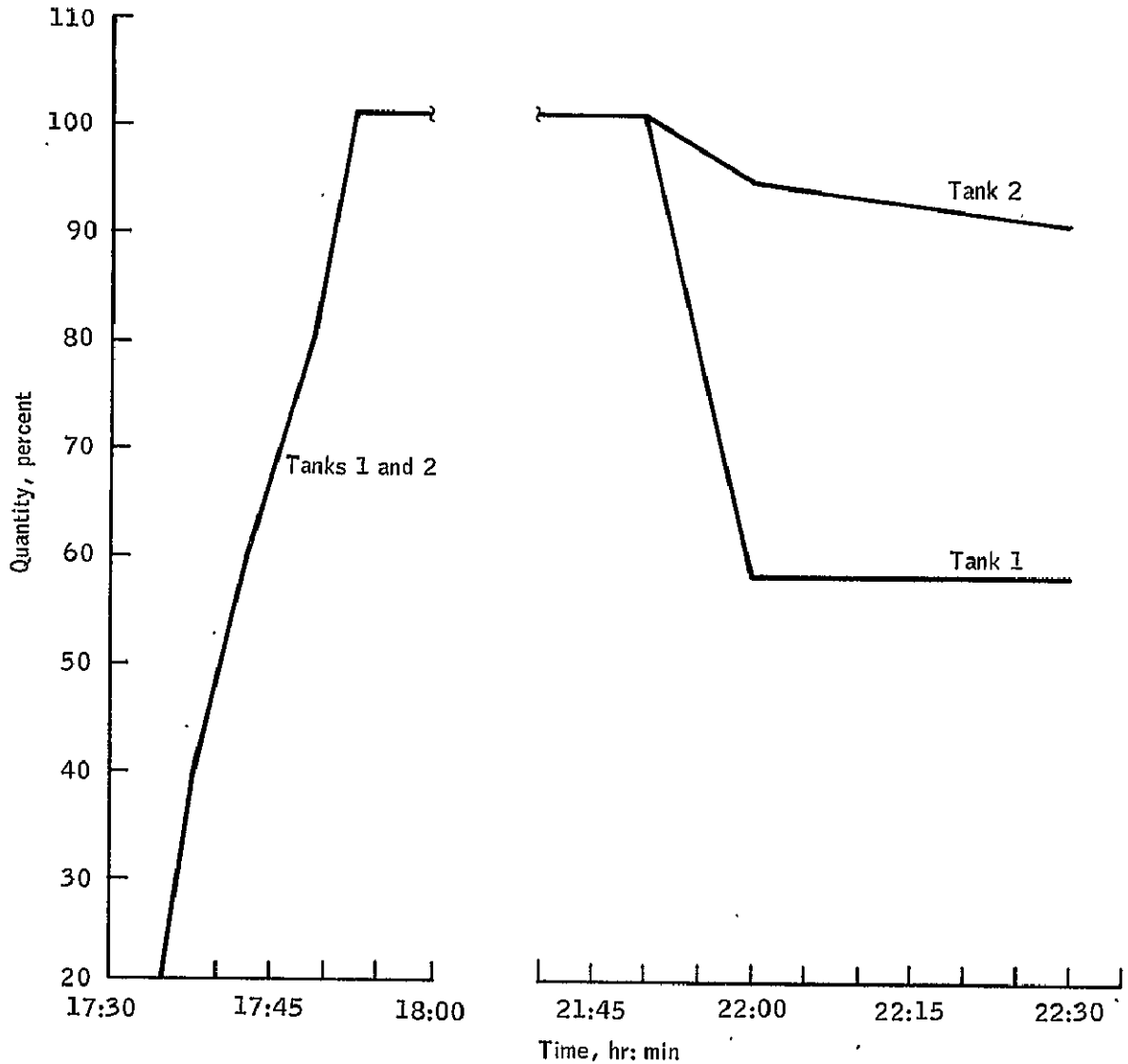


Figure 3-7.- Oxygen tank 2 quantity adjust (CDDT).

Wednesday, March 25, the filter x-rays were reviewed and showed no anomalies, the POD operation was checked and proved normal, and no moisture or procedural problems could be found. NASA-KSC subsystem personnel informed their counterparts at MSC of the GSE troubleshooting plan and its status.

NASA/KSC Chief Project Engineer for CSM discussed the situation in the daily phone call with his MSC counterpart, the Chief CSM Project Engineer.

Wednesday evening, Wintec (the filter vendor) verbally reported that the filter had no restrictions and that there was no unusual contamination.

### 3.3.3 Spacecraft Investigation

Thursday morning, March 26, KSC, NR and NASA management were advised that the problem was most probably either an open or a blockage in the spacecraft portion of the fill path.

By Thursday afternoon, both the subsystem personnel at MSC and NR/Downey, and the project engineering management personnel at all locations had been informed. Discussions were underway to attempt the detanking with higher expulsion pressures, with the possibility of having to "boil off" under consideration.

The Beech Aircraft Company Program Manager was at Downey, and the Beech factory engineers were alerted. Beech engineers began reviewing drawings and concluded that a gap in the dog-leg portion of the tank fill path (due to machining tolerances and cryogenic temperatures) was indeed plausible. Such a gap could be approximately equivalent in area to the cross-section of the actual fill path (0.091 sq. in. vs. 0.098 sq. in.). Reference Beech Report MR15230, dated April 2, 1970.

Friday morning, March 27, KSC, NR and NASA management personnel were briefed on the initial troubleshooting plan:

The flight half of the POD was to be inspected as well as possible to insure no blockage due to seals or parts out of position; the fill and vent lines were to be conected; Tank No. 2 was to be vented through its fill line with the pressure existing in the tank at that time (both tanks had been partially pressurized for use during CDDT); nominal expulsion pressure 80 psia was then to be applied to both tanks, to empty Tank No. 1 and to assure that the problem was repeatable in Tank No. 2; higher expulsion pressures were to be attempted if required; and if that failed, the fluid was to be boiled off with tank heaters.

NR Downey Specification MA0201-3092 limited the application of heater power only if the tank was not serviced with cryogenics or internally cooled. It also stated that cooling was necessary to insure thermal switch closure, and that the later series tanks, without thermal switches, could be damaged by overheating.

In Houston, the MSC Chief CSM Project Engineer held a meeting with the fuel cell and cryogenic subsystem personnel. A review of tank change out problems revealed that the cryo shelf would have to be removed and that the available Downey GSE would not fit within the MSS clam shells. This meant a possible return of the space vehicle to the VAB and maybe demate of the spacecraft from the launch vehicle. Tank x-ray was discussed. MSC personnel remembered a similar detanking problem on one tank of house spacecraft 2TV1. It was decided to dissamble both tanks, then at Downey.

At Beech Aircraft Co., personnel had contacted the Quantity Probe Vendor (Simmonds) and had obtained circuit information. A test was set up and run indicating that a probe short (plate-to-plate, possibly by a loose inconel tube in the dog-leg portion) would produce only $7.4 \times 10^{-3}$ joules (Beech Report MR15230). The tolerance analysis had been completed showing a possible .008" interference fit where the inconel tube entered each Teflon piece. The stress levels appeared acceptable. A quick test for brittleness was conducted at cryogenic temperatures. No damage occured.

By 2 PM EST, the MSS had been returned to position on the launch pad (it was moved to the park site for CDDT T-0) and the cryogenic tank fill and vent lines connected. With Downey personnel monitoring from their mission operations room via the operational intercom system (OIS), the tank at 178 psia was vented through its fill line (fig. 3-8). Onboard quantity decreased from 84% to 65%. Pad personnel viewing the vent outlet on the MSS did not see white vapor unusually present when liquid oxygen is expelled. Further troubleshooting was delayed until the normal post CDDT GSE purge could be completed.

Friday afternoon, KSC NR engineering personnel discussed the data with NR Downey subsystem personnel and agreed on the higher expulsion pressures to be used in the next attempt. It was understood by NR-KSC that if pressure would not do the job, then the fluid would have to be boiled off. KSC-NASA engineering personnel contacted Beech Aircraft to relay the same data, and found that it was already there. Beech personnel described the internal construction of the tank (no detail drawings were available at KSC), the fill path gap theory, the filter capability in the tank supply line (in case there were loose pieces of Teflon), and requested KSC elevation data since they were concerned about a possible fluid head problem. The possibility of detanking by heater boil off was discussed briefly.

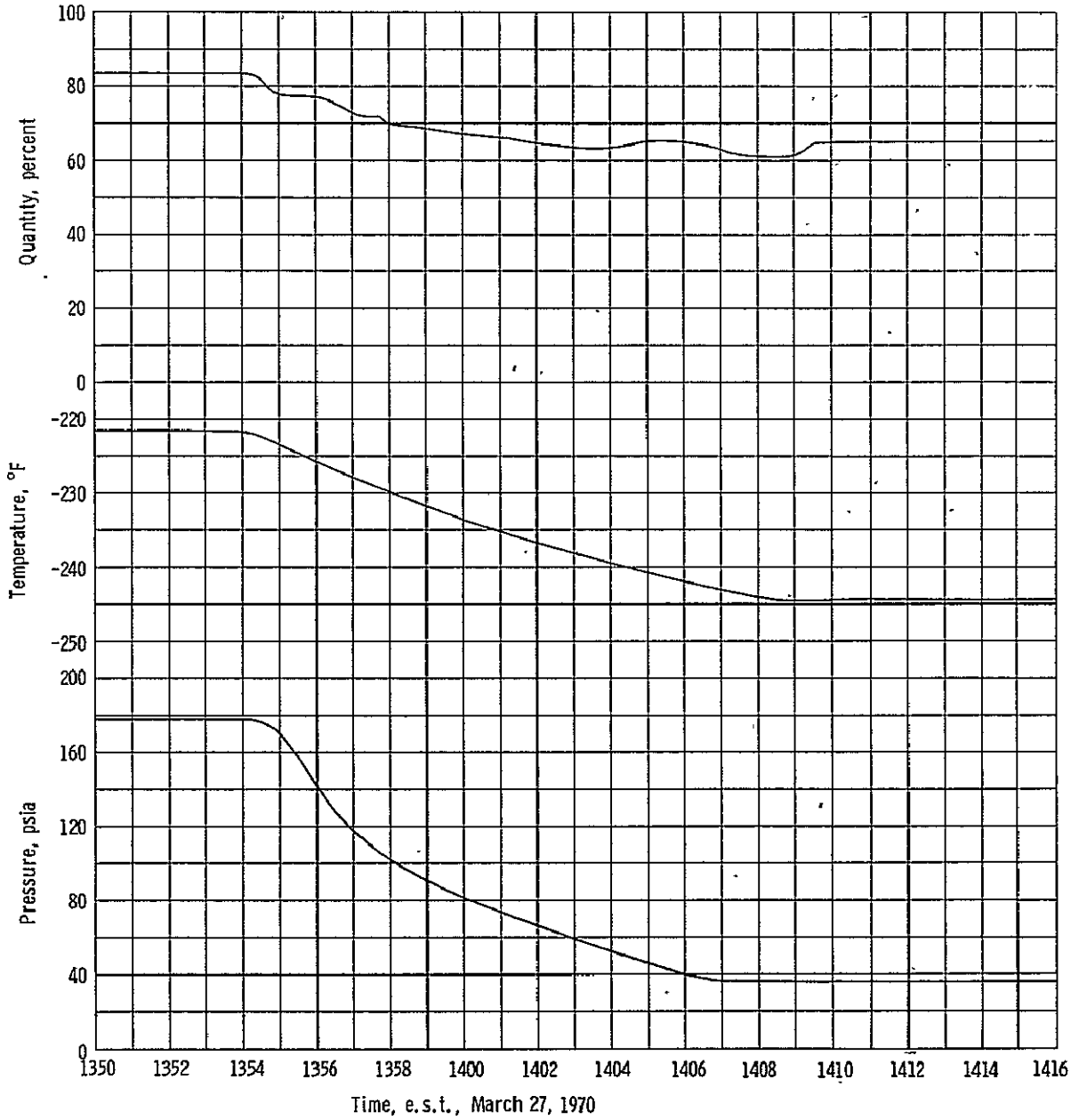


Figure 3-8. - Oxygen tank 2 detanking characteristics (pressure decay through the fill line - CDDT).

The KSC-NR Chief Engineer and the NASA CSM Chief Project Engineer received a joint call from the MSC MGR Apollo Spacecraft Program Office to discuss the tank change-out problem. The call was then transferred to the office of the KSC Launch Director and enlarged to include the MSC Chief CSM Project Engineer, MSC and KSC NASA subsystem personnel, the NR/Downey Chief CSM Engineer and his subsystem personnel, and KSC-NASA spacecraft operations management.

The general situation was discussed including the fill path gap theory, considerations of loose Teflon pieces and the inconel tube, the implications of these during launch count and flight, and the problems involved with x-raying and changing a tank. To x-ray, the rather bulky camera would have to be positioned well inside the bay, with no stands available either for equipment or personnel. To change a tank the cryo shelf would have to be removed. With no GSE, a small technician would have to climb in behind the hydrogen tanks to manhandle the back side until the 247 lb shelf could be properly held by personnel in front. The consequences of damage resulting from either of these operations were of much concern.

It was decided to postpone the tank "keep vs change" decision until later; that KSC would continue in its efforts to detank, and that NR-Downey would expedite the 2TV-1 tank disassembly over the Easter weekend.

### 3.3.4 Tank No. 2 Detanking Procedure

By 20:00 EST Friday evening, March 27, 1970, the GSE had been purged and was ready for further detanking attempts. It must be remembered in the following discussion that the vent POD's of both tanks (OV #1 and OV #2) tie to a common manifold with the capability to switch either into an adjustable pressure source or to the facility vent system; also that these POD valves are designed to seal pressure into the tank when closed, but will not hold pressure in the reverse direction.

First, the GSE regulator controlling the vent line pressure was adjusted to its detanking set point. Pressure in tank no. 2, at approximately 36 psia, increased to 90 psia (fig. 3-9) due to back flow through OV2, while tank no. 1 with 250 psia left over from CDDT remained stable. At 20:25:42 OF1 and OF2 were opened. Tank no. 1 began to empty while tank no. 2 received the inflow from the higher manifold pressure. Twenty seconds later OV1 and OV2 were opened and both tanks equalized while tank no. 1 continued dumping. Seven minutes later, tank no. 1 was empty and an 8 minute GOX purge was begun. Blowing through both tanks, the vent line pressure stabilized at 75 psia.

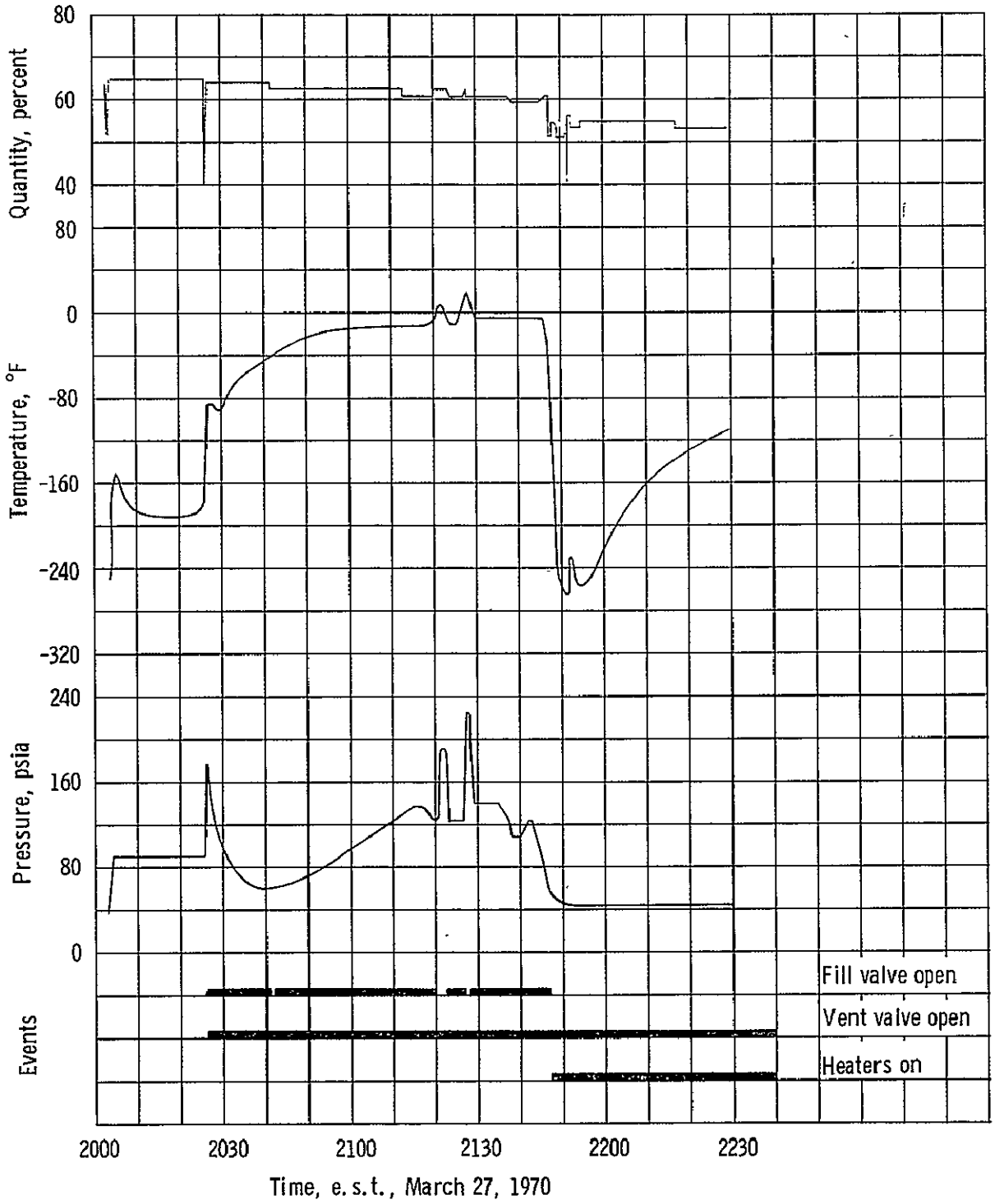


Figure 3-9. - Characteristics of oxygen tank 2 detanking using GSE pressure (CDDT).

At 20:41 valves to tank no. 1 were closed and a purge was begun on tank no. 2. Fourteen minutes later the inlet pressure was adjusted upward to 97 psia. Eleven minutes later the inlet pressure was again adjusted upward to approximately 120 psia. By 21:17 after a total of 36 minutes of purging, the quantity had only decreased from 65% to 61%, and it was obvious that something else would have to be tried.

The GSE regulator was then adjusted downward, OF2 closed, and the tank allowed to pressurize to 190 psia. OF1 was then opened and the tank allowed to vent. The quantity showed no appreciable change. At 21:26 the process was repeated with a pressure of 222 psia. The results were similar.

At 21:35 the NR and NASA engineers on station elected to try the previously planned heater "boil off" operation. The vent manifold supply pressure was secured and the tank allowed to bleed down through its fill POD. This produced an apparent quantity decrease of 5%. At 21:47 OF2 was closed and the heaters were turned on. At 21:52 the back flow pressure that had accumulated in tank no. 1 was vented.

At Houston, the Acting MSC Subsystem Manager had been established as a communications point for the MSC MGR Apollo Spacecraft Program Office, and called the KSC NASA engineer on duty in the control room. He was informed of the lack of progress and given the heater on times and currents. He then suggested that the fans be utilized to add more heat and mixing. This was accomplished by 23:20 (fig. 3-10), and by 00:55 the tank temperature had reached upper limits (84° F).

Third shift personnel, both NR and NASA, (not scheduled) were called, and relieved second shift personnel approximately one hour later. From the plotted data (quantity vs time) the boil-off rate appeared to be decreasing. The NR systems engineer on station remembered a procedure used by Linde Air Products whereby warm gas under pressure would add heat faster. The NR test project engineer, the NR system specialist, and the NASA test conductor on station were consulted. The lead NR systems engineer was called at home. A one hour wait was advised to confirm the rate decrease and to research specifications. The MSC Test Specifications and Criteria Document (TSCD) was reviewed for any system limitations. None were found for this abnormal operation and it was concluded only that the pressure must remain below 25% design burst (1515 psia) so as not to count tank cycles or present a safety problem.

At 03:38, with the boil off rate decrease apparently confirmed, the vent manifold supply pressure was turned on, the tank pressurized to approximately 240 psia, and OV2 closed at 03:55. Pressure in the tank continued to build up indicating heat transfer, and seven minutes later at 290 psi, OF2 was opened and the tank allowed to vent to 60 psia. The seventeen minute venting process produced an apparent quantity decrease of

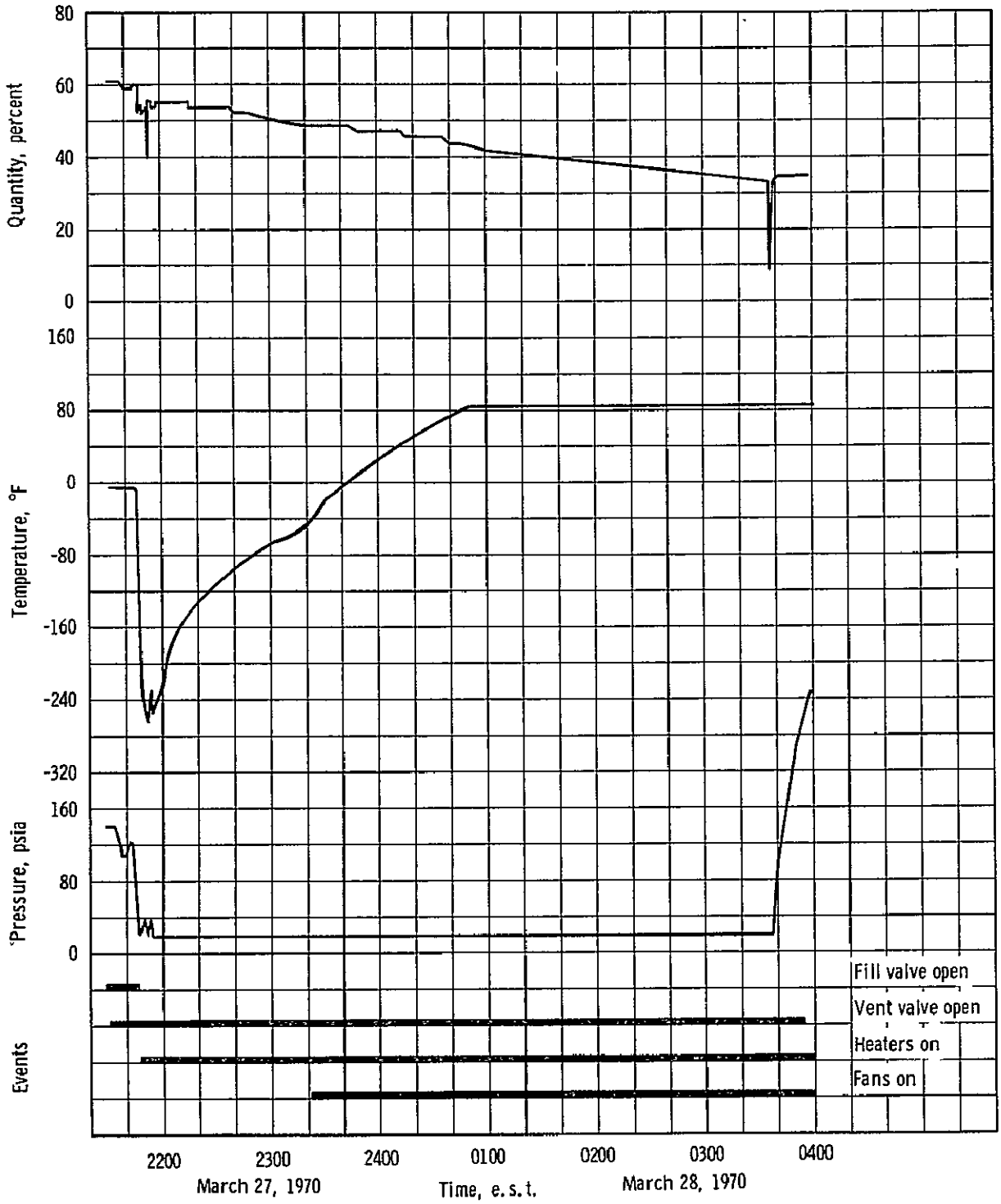


Figure 3-10.- Characteristics of oxygen tank 2 detanking using fans and heaters (CDDT).

7% (from 35% to 28%). The results were considered excellent and the tank was emptied with four additional cycles. Tank behavior and valve cycles can be found in figure 3-11.

Fans were turned off when the quantity reached .5%. Heaters were turned off per the normal detanking sequence (29-019 of TCP-K-0007) that applies a minimal voltage to assure heater thermal switch closure when the temperature is below -75° F.

### 3.3.5 Management Actions and Launch Rationale

Saturday morning March 28, 1970, KSC-NR systems personnel related the details of the detanking procedure (pressures, quantities, heater on-off times, etc.) to NR-Downey systems personnel.

In Houston, the MSC Chief CSM Project Engineer constructed a check-list of items required for the Monday decision point and called the NR-Downey Chief Engineer for CSM:

1. The 2TV-1 tanks were to be opened and the parts flown to Houston.

2. All probe materials were to be reviewed and a hazard analysis conducted.

3. An investigation was to be made into the feasibility of x-raying the tank.

4. Information was needed on how detanking was performed at Beech Aircraft.

5. Downey and Beech engineering personnel were to understand how the detanking was accomplished.

6. The problem of a restriction vs. a leak in the fill path was to be thoroughly analyzed.

In Downey three tanks were x-rayed (XTA0019 and the two from spacecraft 2TV-1). The x-rays showed only faint shadows where the inconel fill tube in the dog-leg was located. Neither Teflon piece was visible.

The Beech Program Manager remained in Downey while the tanks were disassembled. Saturday afternoon KSC-NR and NASA project engineering personnel discussed a tank comparison blowdown test with MSC and Downey.

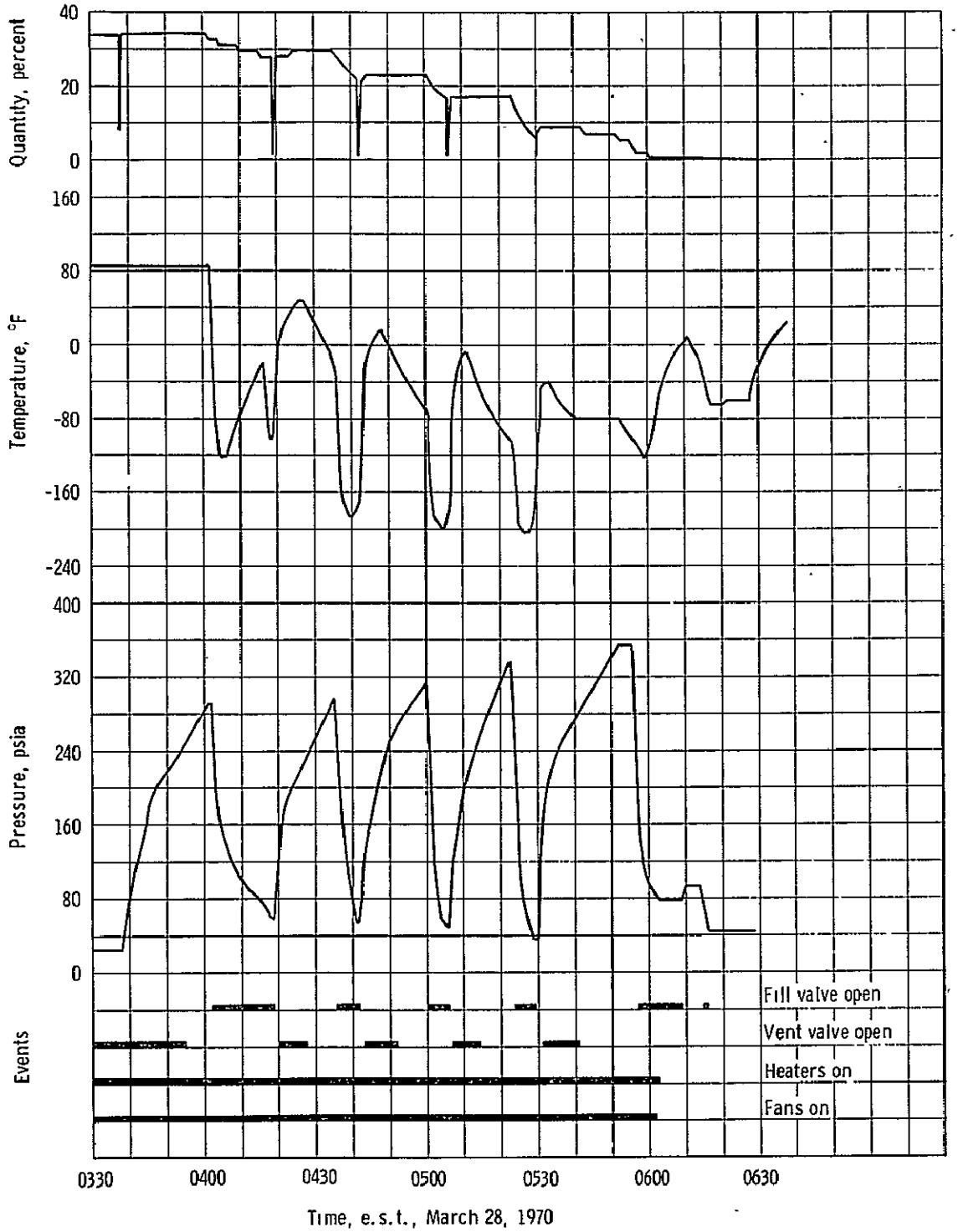


Figure 3-11.- Characteristics of oxygen tank 2 detanking using fans, heaters, and GSE pressure (CDDT).

Monday morning, March 30, MSC subsystem personnel received the detanking details from KSC-NASA subsystem personnel. Beech engineers were also called and received the same details. In addition, the details of tank construction were further discussed together with the Beech detanking process. KSC engineers were told that Beech detanked at supercritical pressures and that no problems had been experienced.

The NASA-KSC Director of Spacecraft Operations held a meeting with all involved NR and NASA personnel in preparation for the afternoon decision conference. The problems involved with changing and X-raying the tank were discussed, together with a blowdown test, to eliminate line restriction considerations, and the possibility of a second tanking to demonstrate no launch count problems.

At 13:30 both tanks were pressurized to approximately 250 psia and vented through the fill lines (tank no. 1 and then tank no. 2). With the exception of an apparent leak from tank no. 2 vent POD that caused a slight increase in tank no. 1 final pressure (this POD was capped for launch to stop the leak) both curves were essentially identical (fig. 3-12). Tank no. 1 dropped 135 psi, in 40 seconds while tank no. 2 dropped 140 psi, indicating no permanent line restrictions.

At 14:00 a conference call was arranged betweeen the KSC Launch Director and the MSC MGR Apollo Spacecraft Program Office with NR-Downey participating. All aspects were discussed: The blowdown test showed no restrictions; the 2TV-1 probe parts appeared loose enough to match the fill line gap theory; the Beech tolerance/temperature analysis indicated a possible leak area approximately equivalent to the fill path cross-section; the quantity probe was then working and had shown no previous anomalies which indicated no functional parts out of position; a loose inconel tube could not get out of the probe area (same exact diameter as the largest hole); shorting of the probe (plate-to-plate) would not present a risk since the energy was only $7.4 \times 10^{-3}$ joules); impact of Teflon parts by the fan impeller (shown improbable by Beech calculations and tests) was considered safe by similarity to a previous NR test/study conducted on a piece of neoprene assumed to be in an earlier spacecraft tank; the Beech detanking procedure as understood by both Downey and KSC personnel would not have indicated an open fill path; the KSC detanking procedure was apparently understood by everyone; and x-ray appeared impractical based on the NR experience and the inherent damage from personnel climbing inside the service module bay.

The checklist developed Saturday was now complete. The shelf drop incident had not been remembered by engineering, and was unknown to management. The continuous heater on time (over 8 hours) had not been highlighted and the effects were not understood or considered at the time.

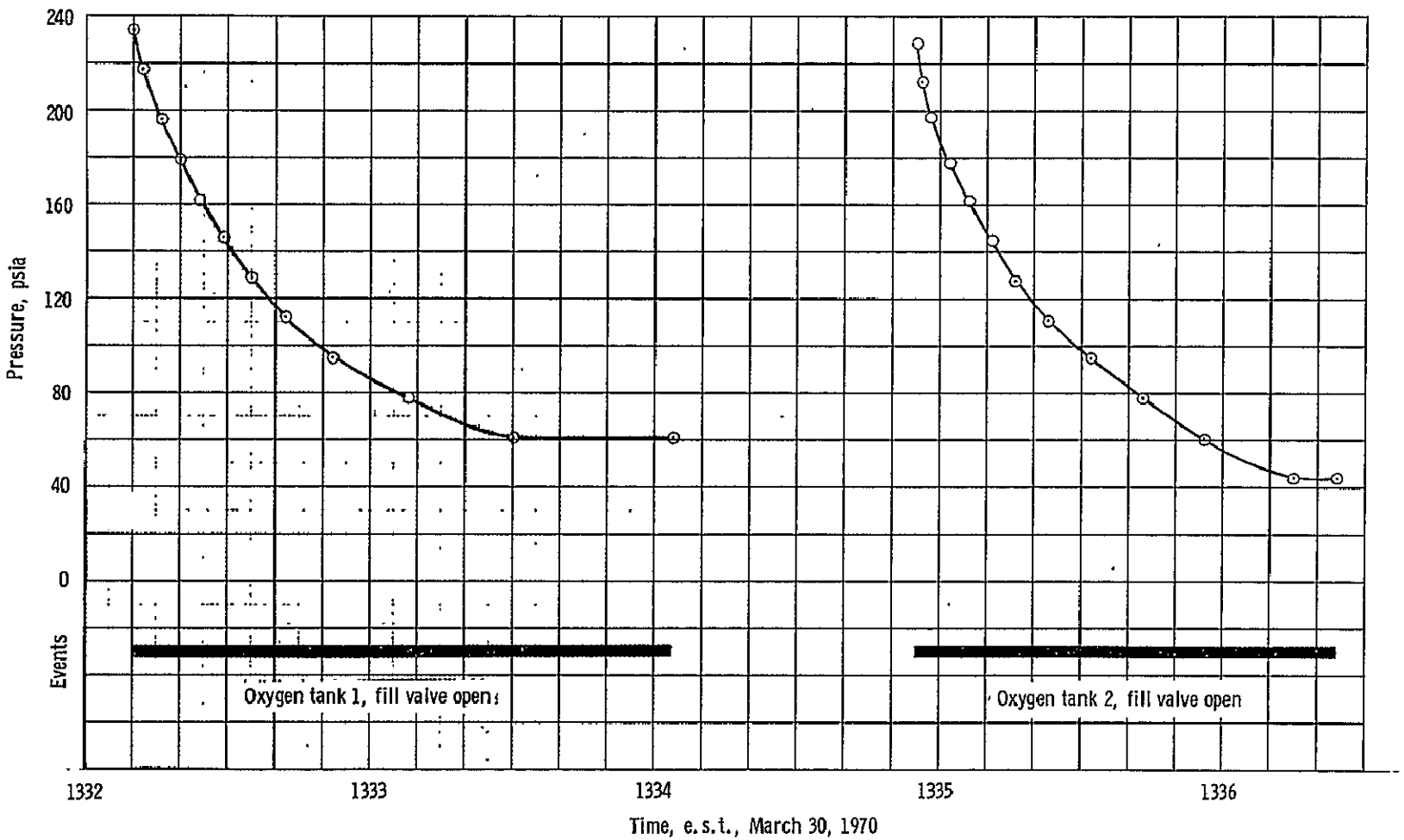


Figure 3-12. - Gaseous oxygen blowdown test, spacecraft 109.

KSC was requested to demonstrate retanking capability to preclude a launch count risk, and to detank by the previously demonstrated successful method. If no anomalies occurred, then, based on the above rationale, the tank would be accepted for launch.

The NASA Mission Director and the Apollo Program Manager were contacted and concurred in the decision.

At 15:50, $O_2$ tank no. 2 was successfully filled to 17% with liquid oxygen. Detanking was accomplished over the next two hours (fig. 3-13) with five pressure cycles. Heaters remained on for approximately 32 minutes.

All subsequent operations were nominal. The tank showed no further peculiarities prior to launch.

### 3.3.6 Post Launch Detanking Analysis

With a heightened awareness of the KSC detanking procedural details, an investigation was conducted to positively settle the question of prelaunch tank damage.

It was demonstrated that the quantity probe dog leg assembly could become dislodged with the correct tolerance conditions and thus prevent detanking; that the heater thermal switches would not open under ground power supply currents due to contact welding; and that the temperature developed due to continuous heater operation would produce severe fan wire insulation damage.

It was further demonstrated that physical damage due to fluid effects was unlikely.

MSC Heater Boil-off Testing.- A spacecraft fan/heater probe (no thermal switches) instrumented with 13 thermocouples, was placed in a full tank of liquid nitrogen (same approximate size as a flight tank). Liquid was then boiled off at ambient pressure by running the fans and heaters continuously. After six hours (fig. 3-14) with the fluid level still two inches above the lower fan, the surface temperature of the uppermost heater coil had stabilized at 1000° F. Directly behind this element, in the inside of the probe, the lower fan wiring is routed through a thin stainless steel conduit touching the .020 inch heater probe wall. All fans and heaters continued to operate for the remaining four hours of the test, with the fan motor case temperature reaching some 350° F.

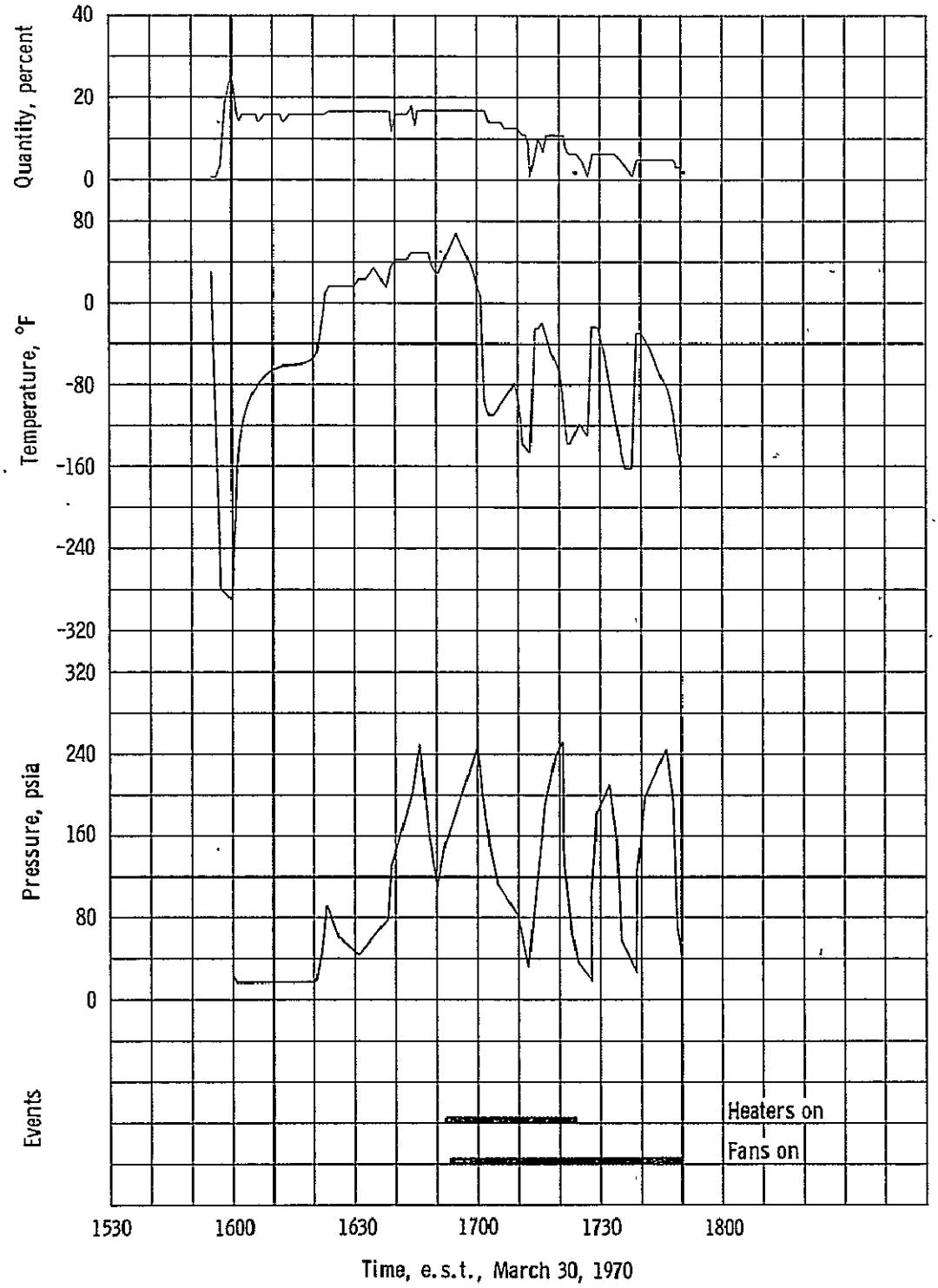


Figure 3-13. - Characteristics of oxygen tank 2 detanking using fans, heaters, and GSE pressure (post CDDT).

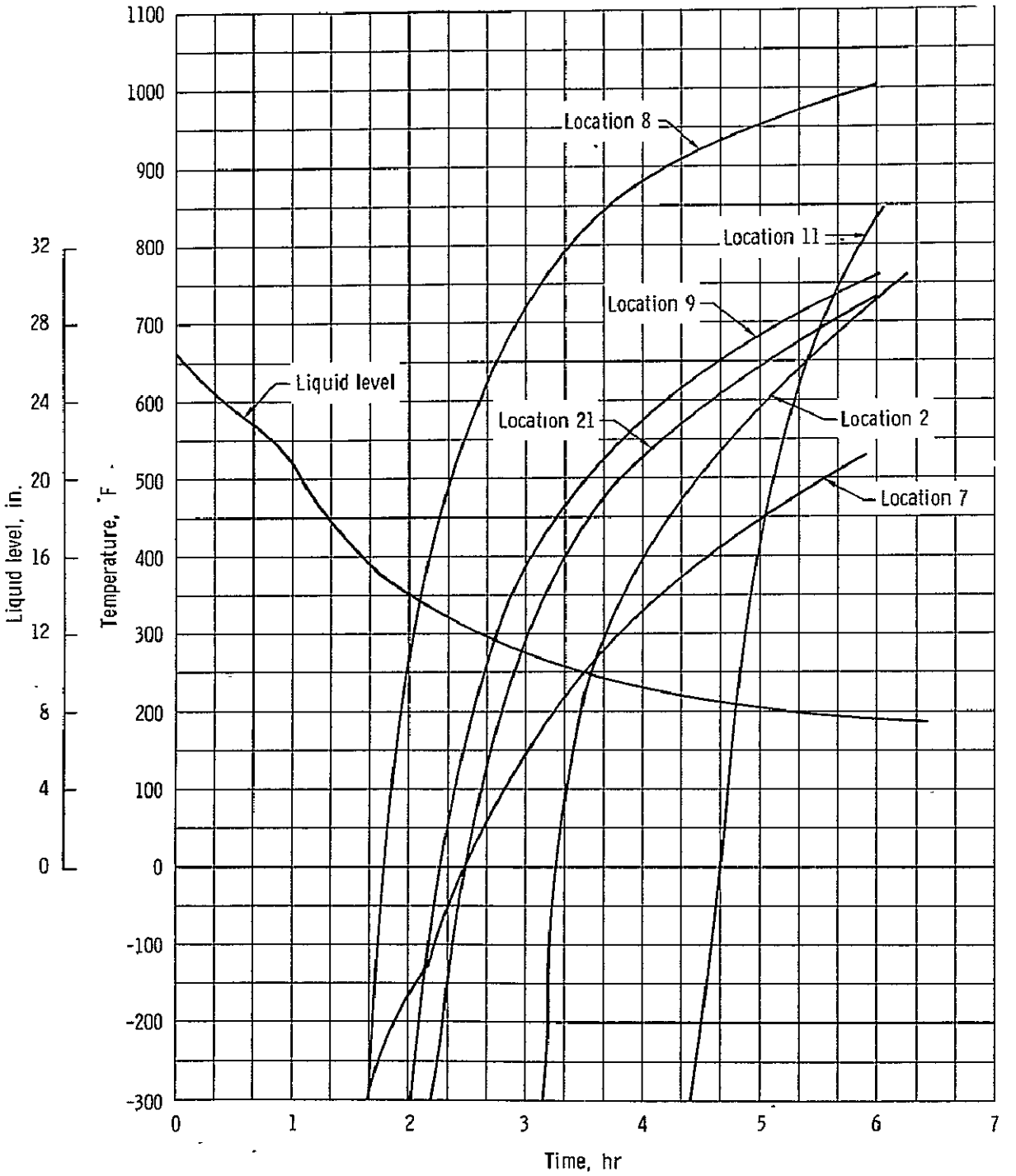


Figure 3-14. - Heater/fan typical test results.

Post-test disassembly showed that the fan wiring had adhered to the conduit wall (some insulation was torn in its removal); that the insulation had changed composition and was very hard; and that complete circumferential cracking had occurred producing segments of insulation not over 3/4-inch long for a six inch length extending downward from the hottest portion.

An attempt was made to repeat the test with thermal switches and a 55 percent full tank (more closely simulating KSC conditions). Upon first power application, one thermal switch was found open. Both switches were then by-passed, with power application established by the cycling of the good switch. A pattern was established that showed initial opening after eleven minutes and then a three minute on and a three minute off cycle. During this period both switches operated normally, and after four off cycles, it was decided to again place both switches in series with their heater elements. Neither switch opened again. The test was terminated after approximately 1-1/2 hours.

Post-test disassembly showed the contacts had become fused together. Subsequent review of specifications revealed that the switch was rated only for 30 V dc and not 65 V dc, and that the .015 inch contact separation would not permit the opening arc to extinguish.

MSC Conduit Test (2P214M).- As a result of Beech computer studies of the tank exit conduit, showing possible 440° F wire temperatures, spacecraft hardware was obtained and placed in a chamber under the correct vacuum and electrical load conditions. Ambient temperature oxygen was supplied and the KSC sequence duplicated with regard to all influencing elements. Maximum conduit temperature reached 326° F after approximately five hours. The pressure cycling produce no appreciable effect. Since this is a worse case boundary, it is concluded that tank S/N 0008 conduit wiring was not thermally overstressed prior to launch.

Fluid Dynamics Effects.- The damage potential of high velocity fluid was investigated with regard to the internal parts of the density probe (the center supporting rivet was established as the weakest element) and also with regard to its effect on the upper dog-leg assembly. The rivet failure point was established by static load test.

Liquid During Detanking.- The following analyses do not preclude the possibility of small slugs of liquid but, for the period investigated, they do show that the average flow could not have been liquid and that it was most probably gas.

From figure 3-15 the maximum detanking rate occurred during the third venting. From the quantity gage readout over the six minute period, the flow rate was 0.07 lb/sec. Since the fluid quantity flowing

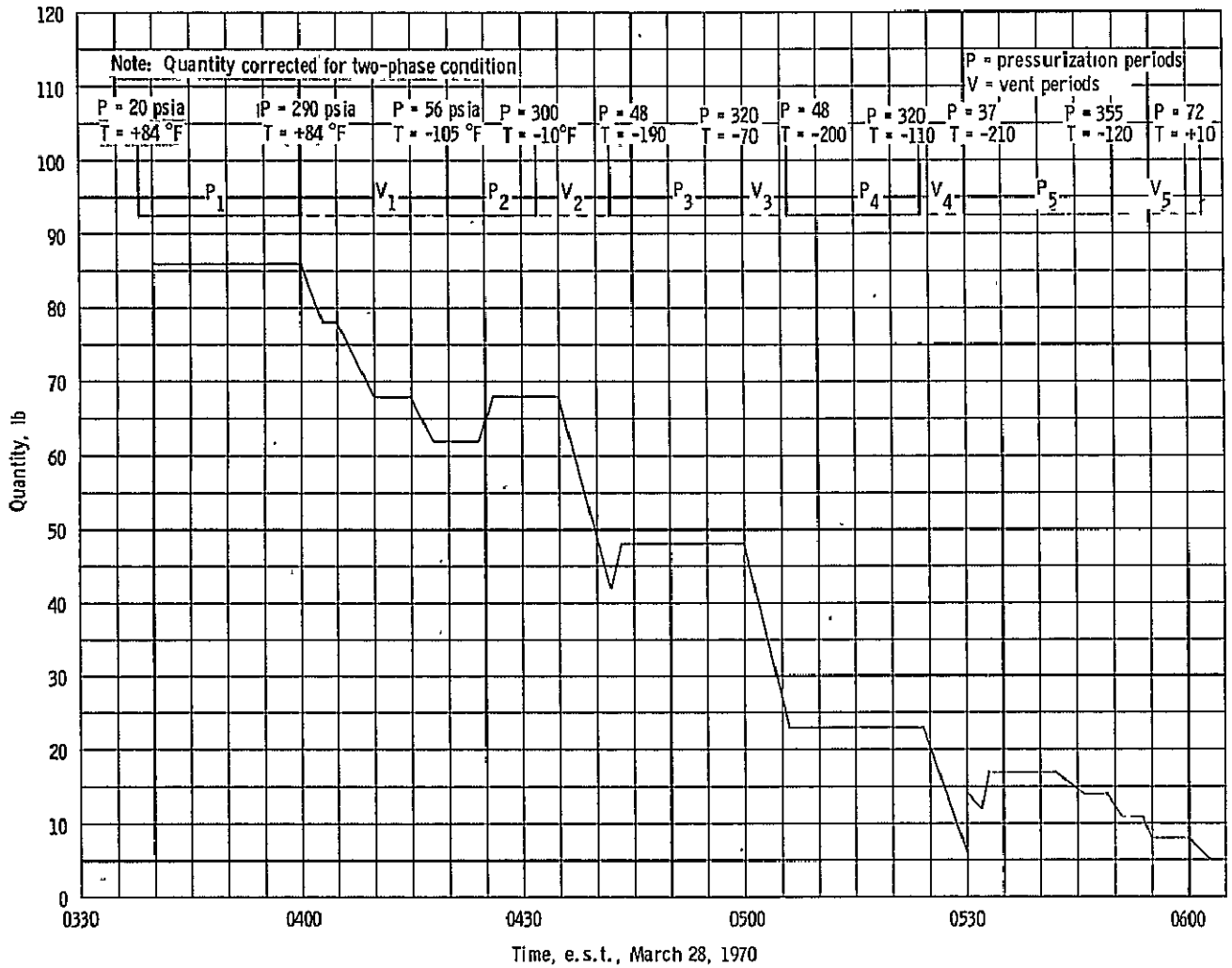


Figure 3-15. - Oxygen quantity during detanking.

cannot change for the length of the path, and if we assume the hole in the top of the stand pipe then:

$$W_{pod} = W_{probe} + W_{hole}$$

or

$$AV\rho_{pod} - AV\rho_{hole} = AV\rho_{probe}$$

The highest possible velocity, and consequently the worst damage potential, will occur if there is no hole. Eliminating the hole, $V\rho$ of the media calculates to 30.2 $lb/ft^2/sec$, and using the density of liquid oxygen at 180 psia, the velocity of fluid in the standpipe must be 0.5 ft/sec. This requires a driving pressure of only 0.0016 psi, and while the actual pressure cannot be established, it is known to be in excess of 100 psi. From this it can be seen that the average density must be appreciably lower, and that the exit media could not have been liquid over the 6 minutes examined.

From figure 3-12, the blowdown test conducted at Kennedy Spacecraft Center, and using the tank volume with the measured pressures, the flow rate and media density at the time were 0.09 lbs/sec and 1.1 $lbs/ft^3$. During the venting period discussed above, the flow rate was 0.07 lbs/sec. Since velocity is a function of pressure, and since pressure is controlled by friction line losses, then velocity becomes a function of viscosity and flow rates. The viscosity of oxygen does not change appreciably with temperature, and since the flow rates were approximately equal, it then follows that the velocities in both cases were approximately equal.

Since the same tank vented thru the same lines in both cases, and since

$$W = AV\rho$$

it follows that the densities were approximately equal. From this it is concluded that the exit media was most probably gas.

Liquid Damage to the Probe Rivet.- The following analysis reviews the possibility of liquid damage to the probe rivet (worst case conditions).

Assuming liquid flow, the maximum pressure differential used, and assuming no significant velocity in the tank bulk fluid, then, for the configuration shown in figure 3-16, the velocity will be 238 ft/sec. Computing a Reynolds number to establish a drag coefficient of 1.2, the force on the rivet can be calculated to be 63.0 pounds.

The actual force seen by the rivet was, of course, significantly less since there was an appreciable leak between the tank and the fill path at the upper end. The assumed 320 psi delta could not have existed. If a pressure of even 100 psi could have been sustained, then the force would drop to as little as 11 pounds. The actual failure point of the rivet was determined to be 105 pounds by static load (reference MSC test No. TPS-13-T-60).

Torque on Probe Dog-Leg.- This analysis shows that the normal fluid-produced torque on the probe dog-leg assembly would be sufficient to dislodge it under the correct manufacturing tolerance conditions (fig. 3-17).

Assuming the maximum pressure differential that would occur during normal detanking (as the fluid interface rises to contact the first bend) (fig. 3-18) and with no velocity in the tank bulk fluid, then the stand pipe velocity is calculated to be 139 ft/sec. Equating the upward force to the sum of the momentum force and the pressure force, $F_u$ is calculated to be 58.0 pounds, with the moment 32.4 in-lbs. Utilizing measured flow rates during a normal detanking, the moment can be reduced to 5.3 in-lbs. This is still adequate to produce motion. Detanking tests at Beech Aircraft have shown that fluid will be expelled in the worst case short (fig. 3-17) only if the assembly is exactly aligned.

Thermal Effects.- As a result of Beech computer studies of the tank exit conduit, showing possible 440° F wire temperatures, and a drawing study that permitted the lower fan wiring to cross a heater element, tests were organized at Manned Spacecraft Center and at Beech to reproduce the Kennedy Spacecraft Center detanking procedure.

## 3.4 SUPPORTING DATA

The significant documentation, discrepancy reports (DR's), Material Review Board Actions (MR's), Specifications, Test Preparation Sheets (TPS's), Related Documents, and Waivers, necessary to support the conclusions drawn in section 3.2 and 3.3 are tabulated in this section. These items may be obtained from the spacecraft records or applicable NASA offices.

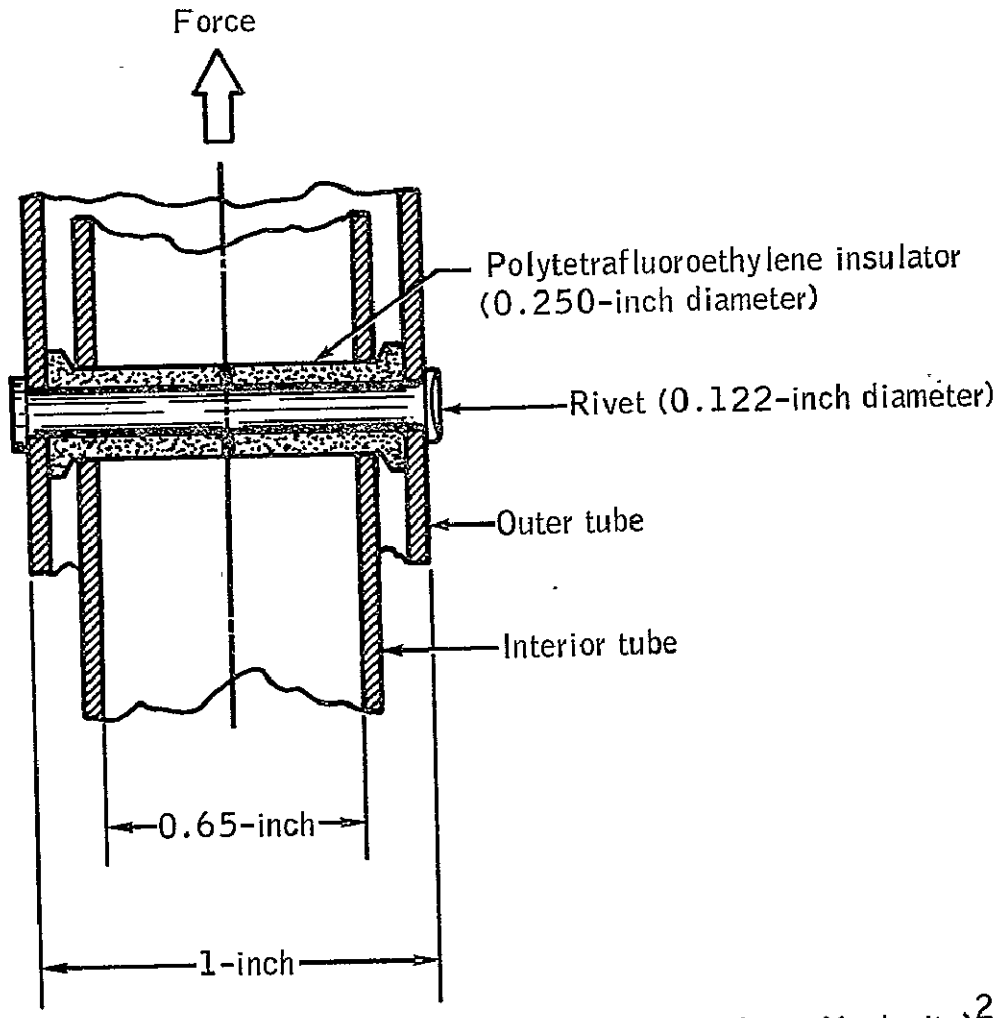


$$\text{Force} = \frac{(\text{drag coefficient})(\text{density})(\text{area})(\text{velocity})^2}{2g}$$

Figure 3-16.- Density probe cross section showing fluid force on the rivet.

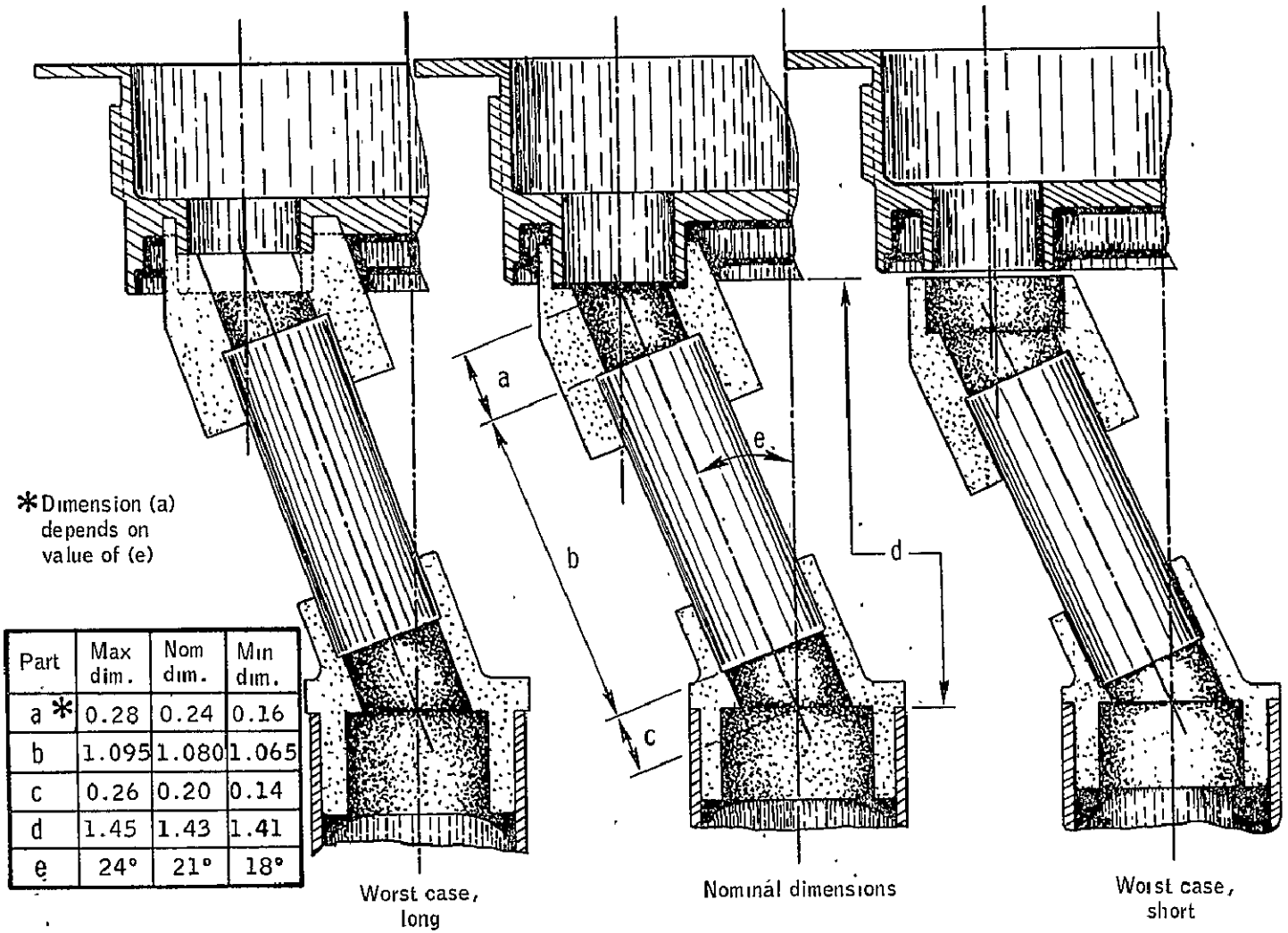


*Dimension (a) depends on value of (e)

| Part | Max dim. | Nom dim. | Min dim. |
|---|---|---|---|
| a * | 0.28 | 0.24 | 0.16 |
| b | 1.095 | 1.080 | 1.065 |
| c | 0.26 | 0.20 | 0.14 |
| d | 1.45 | 1.43 | 1.41 |
| e | 24° | 21° | 18° |

Figure 3-17.- Manufacturing tolerance study.

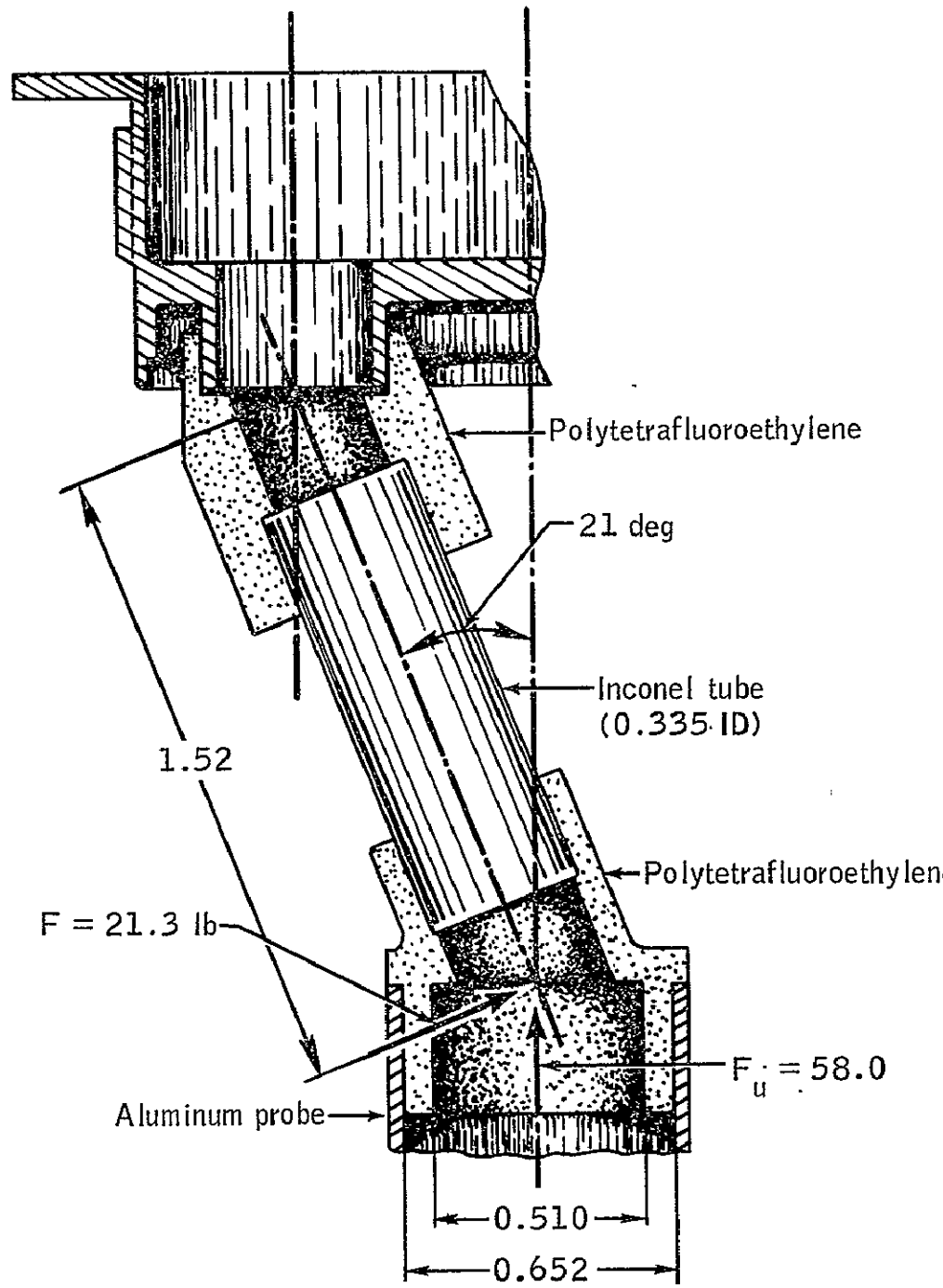


Figure 3-18.- Standpipe assembly at the top of the tank.

### 3.4.1 DR's, MR's, Specification, TPS's, Related Documents, Waivers, and TCP's

DR's.-

SC 109-SC0154 - Remove and replace all fuel cells

SC0118 - Oxygen tank No. 1 vac-ion pump converter replaced

SC0121 - $LH_2$ tank No. 2 pressure transducer failed. Replaced per TPS SC042

SC0325 - Remove and replace $LH_2$ tank No. 1

SC0366 - Fuel cell No. 1 $LH_2$ regulated pressure transducer replaced.

SC0373 - Fuel cell No. 2 connector P62 has recessed pin. Condition repaired.

SC0374 - Fuel cell No. 2 connector J1 has anodizing off on first thread. Condition accepted.

SC0380 - Remove and replace fuel cell No. 1

SC0387 - Fuel cell No. 1 did not load share properly. Fuel cell removed and replaced per above DR.

SC0441 - Remove and replace fuel cell No. 2 and No. 3

SC0512 - Spacecraft could not be detanked with normal detank procedures. Condition accepted for flight.

SC0521 - Oxygen tank No. 1 quantity indication showed random fluctuation. Condition accepted for flight.

SC0537 - $LH_2$ tank No. 1 quanity accepted for flight (waiver No. 109PO-020).

SC0538 - $LO_2$ tank No. 2 vent POD leaked. No leakage with flight cap installed and condition accepted per MR.

DR GSE 132-1-1735 - GSE investigated to insure no restrictions during detanking problem.

MR's.-

MR Action - Replacement of fuel cells (reference DR SC109-SC0154)

MR Action - Acceptance of $LO_2$ tank No. 2 vent POD leak (reference DR SC109-SC0538)

Specifications.-

MA0201-3092 - Cryogenic gas storage system checkout and servicing requirements - KSC.

MA0201-3089 - Cryogenic storage system checkout requirements - Downey

SN9-R007B - Test and checkout requirement document for KSC - CSM 108 and subsequent vehicles, dated December 31, 1969.

SPT-0003A - Test and checkout specification and criteria document for KSC (CSM 108 and subsequent CSM's), dated February 1970.

TPS's.-
TPS GS-088-1-473 - MSOB facility activation

S/C-109-SC042 - Replace $LH_2$ pressure transducer
S/C-109-SC045 - Retest of $LH_2$ pressure transducer
S/C-109-SC118 - Remove SM-2 for $LH_2$ tank No. 2 replacement
S/C-109-SC119 - Remove and replace $LH_2$ tank No. 2

Related Documents.-

1. Apollo fuel cell and cryogenic gas storage system flight support handbook.

2. Beech test procedure No. BP-14346-1, dated 6/6/66, Rev. A, 10-18-66.

3. Beech memorandum report MR 15230, dated April 2, 1970.

4. NR letter 68MC197 (contract No. NAS 9-150, 2TV-1 SESL LOX dump system analysis) to NASA MSC, dated July 29, 1968.

5. SD-68-609, engineering analysis report, thermal-vacuum test 1, spacecraft 2TV-1, dated August 15, 1968.

6. 2P214M - MSC test report on the test to determine the temperature rise in the conduit during the modified detanking on S/C 109 at KSC.

7. Wintec Corporation test report TR-220 on hardware analysis of P/N 15241-637 Wintec filter assembly S/N 001.

8. S/C 2TV-1 test project engineering report, thermal vacuum test, June 24, 1968.

9. CSM 2TV test project engineering report, thermal vacuum test No. 2 Septemper 9, 1968

Waivers.-
109-PO-001 - Musty odor in the suit loop samples.

109-PO-020 - $LH_2$ tank No. 1 quantity of 98.7 percent did not meet the 99 percent requirement of SP0003B.

TCP's.-
TCP 3063 - Service module move and mate preps

TCP 3071 - CSM mate

TCP 0070 - Abbreviated combined systems test

TCP 0048 - Simulated altitude chamber test

TCP 0034 - Altitude chamber test

TCP 005 - Integrated test with launch vehicle simulator

TCP 0028 - Flight readiness test

TCP 0007 - Countdown demonstration and countdown

TCP 5127 - EPS water glycol servicing and compressibility

TCP4734 - Pad 39 facility activation for the $LO_2$ system

TCP 4773 - $LO_2$ and $LH_2$ dewar servicing

### 3.4.2 Sampling and Loading Procedures, Fill Line Filter Analysis

The purity of a test complex, used for gas leak and functional checks is normally certified for use by gas purity and particulate samples following its original program activation flushing. Between certification and use, a gas pressure pad is left in the system. Presence of this pad pressure maintains systems integrity.

MSOB gas sampling.- The cryogenic and fuel cell fluid distribution system (FDS) in the MSOB (reference fluid schematic for MSOB gas supplies, fig. 3-3) was validated for spacecraft 109 per TPS-088-1-473 prior to any spacecraft testing. The leak checks and sampling per this TPS were performed with gaseous nitrogen. The gaseous helium purity used to pressurized the cryogenic system in TCP-3071 and TCO-0070 was insured by facility samples upstream of the FDS. Gaseous oxygen used to pressurize the oxygen cryogenic system in TCP-0048 and TCP-0034 was from certified (QC controlled analysis by the supplying agency) K-bottles. The oxygen content was verified with a Beckman analyzer at the K-bottle outlet and a purity sample was taken from inside the command module at the suit loop outlets. All samples were within the required specifications with the exception of some musty odor from the suit loop sample. This odor is normal, detected on all spacecraft, with the required specification being changed to reflect this.

MSOB filters.- The GSE valve box and the spacecraft interface filter for the MSOB system are 5 micron nominal - 15 micron absolute. The filters were removed from the system, cleaned, and bubble point verification performed at the beginning of TPS-088-1-473. The filters were then reinstalled in the system under a $GN_2$ purge.

LC-39 gas sampling.- The cryogenic and fuel cell fluid distrubution systems at LC-39 (fig. 3-4) were verified by TCP-4734 prior to any spacecraft testing. The gaseous helium purity, used to perform the Pressure Operated Disconnect leak checks, was insured by facility samples upstream of the FDS. The gaseous oxygen used at LC-39 to pressurize the cryogenic system came from a certified gaseous oxygen tube-bank trailer. The

oxygen purity was verified by samples taken at the filter sample valve at the oxygen purge disconnect. All samples were within the required specifications.

LC-39 filters.- The filters on the oxygen vent and fill disconnects are 15 micron absolute Wintec filters. The filter at the oxygen purge disconnect is a 5 micron nominal - 15 micron absolute Capital Westward.

Liquid oxygen loading.- The spacecraft liquid oxygen tanks are serviced from a portable dewar. The dewar is serviced from a certified portable tanker through a 5 micron-15 micron absolute filter at a fluid complex (Cryo II Building) with the liquid oxygen overflow sampled for purity at the outlet vent of the dewar during filling (reference dewar servicing schematic, fig. 3-6). The sample is a liquid sample. The dewar is then transferred to the pad by truck and connected directly into a fill manifold already connected to the spacecraft, (fig. 3-5). Prior to servicing, the spacecraft tanks are evacuated to 5 torr and held for a period of two hours. After the vacuum break with gaseous oxygen, a moisture sample is taken from the tanks (valve G35MV-2) and verified to be less than 25 ppm. Fans are turned on immediately prior to servicing and turned off at approximately 100 percent load. Liquid oxygen is then pressure transferred (45 psia Gox) into both tanks simultaneously at a flow rate of approximately 25 pounds per minute and allowed to overflow into the vent line system for 10 minutes after the tanks have filled. Valving is then closed trapping the warming liquid/gas media between the spacecraft vent disconnects and the facility vent valve. This is allowed to expand through valve G35MV-2 into a sample container and is analyzed for helium, nitrogen, and total hydrocarbons. All samples taken during liquid oxygen servicing of spacecraft 109 were within specification.

At the time of the initial detanking incident in CDDT (reference section 3.3) the filter for oxygen tank 2 fill line was removed to investigate for possible restrictions.

When the Wintec Filter was examined by the Wintec Corporation, three glass beads were found in the effluent that was flushed through the filter in the reverse direction (from spacecraft to GSE). There was also a quantity of lubricant found on the GSE side of the filter assembly, identified as "Krytox 240 AC". This lubricant ($LO_2$ compatible) is normally used at KSC during the connection of the close-tolerance bayonet fitting to its filter assembly. Samples of the effluent when the filter was flushed in the flow direction, from GSE to spacecraft, contained 13 particles between 100 and 250 micron size and 9 particles greater than 250 microns. These were identified only by metalic color as copper, brass, bronze, copper-gold, and some unidentified fibers and plastic. Most of these particles presumably came out of spacecrafts during S/C 108 and S/C 109 detanking, and from the disconnection of the

filter and pressure operated disconnect. It, of course, cannot be determined exactly when these contaminants entered the filter or from which spacecraft; however, the number of particles is not considered significant based on the quantity of fluid flowed through the filter during spacecraft detanking and the 8.5 gallons of fluid used to obtain the samples. The spacecraft cleanliness level allows 10 particles between 100 and 175 microns per 500 ml of flush fluid (this would equate to 640 particles for the quantity of flush fluid used).

The three glass beads were 15, 45, and 50 microns in size. It can be concluded, based on the bead size, that the beads did not come from the spacecraft tanks since the Wintec bubble point of the filter element correlated to an equivalent pore diameter of 9.4 microns. Investigation into the source of the beads has not been positive. Based on the small size of any beads that could have passed through the filter into the tank (approximately 0.0004 inches) it is concluded that the beads could not have been detrimental to the system's performance.

### 3.4.2.1 Summary of KSC Sample Results

| Authorizing Doc. | Sample Origin | Specification | Fluid/Sample Type | Within Specification |
|---|---|---|---|---|
| TPS-088-1-473(MSOB) | Outlet of filters on GSE at oxygen fill (1 and 2) and oxygen purge | MSC-SPF-0021 | $GN_2$/Particulate<br>$GN_2$/Purity (Hydocarbons only) | Yes<br>Yes |
| TCP-3071 | Facility GHe Battery #1 and #2 | MSFC-364A (Meets-364B) | GHe/Purity | Yes |
| TCP-0070 | Facility GHe Battery #1 and #2 | MSFC-364A | GHe/Purity | Yes |
| TCP-0048 | Inside CM - suit loop. | SPT-003A (TSCD) | $GO_2$/Purity (For this test certified K-bottles of $GO_2$ are utilized) | Yes* |
| TCP-0034 | Inside CM - suit loop | SPT-0003A (TSCD) | $GO_2$/Purity (For this test certified K-bottles of $GO_2$ are utilized) | Yes* |
| TCP-4734 | GSE - Filter sample valve at oxygen purge filter | MSC-SPF-0021 | $GN_2$/Particulate (Using facility supply) | Yes |
| | $O_2$ tank vent line sample valve G35MV2 | MSC-SPF-0021 | GHe/Particulate | Yes |
| | $O_2$ tank fill flex hose outlet (G35FH1441) | MSC-SPF-0021 | $GO_2$/Particulate (Using $GO_2$ from certified K-bottles) | Yes |
| TCP-0005 | GSE - Filter sample valve at oxygen purge filter | MSC-SPF-0021 | $GO_2$/Purity | Yes |
| | Facility GHe Storage | MSFC-364A (Meets 364B) | GHe/Purity | Yes |
| TCP-0028 | GSE - Filter sample valve at oxygen purge filter | MSC-SPF-0021 | $GO_2$/Purity | Yes |
| | Facility GHe storage | MSFC-364A (Meets 364B) | GHe/Purity | Yes |

*Waiver granted for musty odor.

3.4.2.1 Summary of KSC Sample Results - Concluded

| Authorizing Doc. | Sample Origin | Specification | Fluid/Sample Type | Within Specification |
|---|---|---|---|---|
| TCP-0007 - CDDT | GSE - Filter sample valve at oxygen purge filter | MSC-SPF-0021 | $GO_2$/Purity | Yes |
| | Moisture-Gas flow from the tank and sample at sample valve G35MV2 | TSCD - 25 ppm | $GO_2$/Moisture | Yes |
| | GSE - Vent line sample valve G35MV2 | TCN-256 (TSCD) | $GO_2$/Purity | Yes |
| TCP-0007 - Recycle from CDDT | GSE - Filter sample at oxygen purge filter | MSC-SPF-0021 | $GO_2$/Purity | Yes |
| TCP-0007 - CD | Moisture - Gas flow from the tank and sample at sample valve G35MV2 | TSCD - 25 ppm | $GO_2$/Moisture | Yes |
| | GSE - Vent line sample valve G35MV2 | TCN - 256 (TSCD) | $GO_2$/Purity | Yes |
| TCP-4773 - CDDT | GSE - $LO_2$ Dewar vent line sample valve during Dewar servicing (S/N-2) | MSF-SPF-0021 | $LO_2$/Purity | Yes |
| TCP-4773 - DR 512 | GSE - $LO_2$ Dewar vent line sample valve during Dewar servicing (S/N-1) | MSC-SPF-0021 | $LO_2$/Purity | Yes |
| TCP-4773 - CD | GSE - $LO_2$ Dewar vent line sample valve during Dewar servicing (S/N-2) | MSC-SPF-0021 | $LO_2$/Purity | Yes |

### 3.4.2.2 Sample Analysis Report Numbers

| Reference Document | Lab Sample No's |
|---|---|
| TPS-08801-473 | G22497 |
| | G22498 |
| | G22499 |
| | G22500 |
| | G22501 |
| | G22502 |
| TCP-3071 | G22940 |
| | G22337 |
| TCP-0070 | G23997 |
| | G24645 |
| | G25152 |
| | G25654 |
| TCP-0048 | G29214 |
| | G29387 |
| TCP-0034 | G29880 |
| | G29881 |
| TCP-4734 | G38502 |
| | G38503 |
| | G38500 |
| | G38501 |
| | G38509 |
| | G38507 |
| TCP-0005 | G00261 |
| | G00262 |
| | G39747 |
| | G00301 |
| TCP-0028 | G01908 |
| | G01909 |
| | G00891 |
| | G01446 |
| | G02009 |
| TCP-0007-CDDT | G06160 |
| | G06161 |
| | G06113 |
| | G06114 |
| TCP-0007-Recycle | G06103 |
| | G06104 |
| TCP-0007-CD | G07395 |
| | G07386 |

| | |
|---|---|
| TCP-4773-CDDT | G06097<br>G06098 |
| TCP-4773-DR512 | G06795<br>G06796 |
| TCP-4773-CD | G07377<br>G07378 |

NASA — MSC — Coml., Houston, Texas