https://ntrs.nasa.gov/search.jsp?R=19710015937 2018-07-25T01:38:08+00:00Z

General Disclaimer

One or more of the Following Statements may affect this Document

- This document has been reproduced from the best copy furnished by the organizational source. It is being released in the interest of making available as much information as possible.

- This document may contain data, which exceeds the sheet parameters. It was furnished in this condition by the organizational source and is the best copy available.

- This document may contain tone-on-tone or color graphs, charts and/or pictures, which have been reproduced in black and white.

- This document is paginated as submitted by the original source.

- Portions of this document are not fully legible due to the historical nature of some of the material. However, it is the best reproduction available from the original submission.

Produced by the NASA Center for Aerospace Information (CASI)

Report No. S-70-7
NYU-AA-70-27

BUCKLING OF CONTINUOUSLY SUPPORTED BEAMS

by

G. K. Narasimha Murthy

Department of Aeronautics and Astronautics

Prepared for the

Office of University Affairs

National Aeronautics and Space Administration

under grant

NGL-33-016-067

September 1970

New York University
School of Engineering and Science
University Heights, New York, N.Y. 10453

N71-25413
(ACCESSION NUMBER) (THRU)
45 G3
(PAGES) (CODE)
CR-118313 32
(NASA CR OR TMX OR AD NUMBER) (CATEGORY)
FACILITY FORM 602

MAY 1971
RECEIVED
NASA STI FACILITY
INPUT BRANCH

Report No. S-70-7
NYU-AA-70-27

NEW YORK UNIVERSITY
New York, N.Y.

BUCKLING OF CONTINUOUSLY SUPPORTED BEAMS

by

G.K. Narasimha Murthy

Department of Aeronautics and Astronautics

Prepared for the Office of University Affairs
National Aeronautics and Space Administration
under Research Grant NGL-33-016-067

September 1970

BUCKLING OF CONTINUOUSLY SUPPORTED BEAMS*)

by

G.K. Narasimha Murthy[1)]

SUMMARY

The buckling of continuously supported infinite beams is investigated. The foundation models used are: the Winkler model, the Pasternak model, and the elastic continuum. For each foundation model, the buckling loads were determined when the beam rests on a two-dimensional foundation and also when the foundation extends beyond the width of the beam. The effect of the outside foundation is established by comparing the obtained buckling loads.

INTRODUCTION

The utilization of reinforced concrete pavements for roads and airport runways and the use of metal rails for railroad tracks created interest in continuously supported structures. These structures may be subjected to a variety of loads. One possibility is the induction of compressive stresses due to heating. Buckling of pavements and rails may result when these compressive stresses exceed a certain limit.

In the present paper, the buckling of infinitely long beams supported by an elastic foundation is studied. It is assumed that the induced compressive force is axial and uniform throughout the beam.

---

*) This research was sponsored by the National Aeronautics and Space Administration under grant NGL-33-016-067. The paper also constitutes part of a dissertation submitted by the author to New York University in partial fulfillment of the requirements for the degree of Doctor of Philosophy.

1) Research Assistant, Department of Aeronautics and Astronautics, New York University, New York, N.Y.

The differential equation for the deflection of a beam w(x) resting on a foundation and subjected to lateral load q(x) and axial load N is given by

$$EI \frac{d^4 w}{dx^4} + N \frac{d^2 w}{dx^2} = q(x) - p_o(x)$$

where $p_o(x)$ is pressure at the interface between the foundation and the beam.

The actual response at the interface depends on the material of a foundation and is usually very difficult to determine. In order to reduce the encountered mathematical difficulties, various foundation models were proposed to approximate the real foundation behavior. For a discussion of various models see ref. [1]. The Winkler [2], Pasternak [3], modified Pasternak [4] foundations, and the elastic continuum are some examples.

Because of the absence of shear interactions between the spring elements of the Winkler foundation, the foundation outside the width of the beam does not contribute to the foundation response. This is not the case with the real foundation. The above shortcoming is eliminated by using the Pasternak, modified Pasternak foundations or the semi-infinite elastic continuum.

The purpose of this paper is to study the effect of the outside foundation on the buckling load of an infinitely long beam continuously supported on an elastic foundation. We start with a brief survey of relevant publications.

The majority of relevant publications deals with the bending of continuously supported infinite beams. An infinite beam resting on a two-dimensional elastic continuum and subjected to a concentrated load was investigated by M.A. Biot [5] and E. Reissner [6]. Biot solved

the above problem using the sine wave distribution of load, while Reissner used the Fourier integral approach.

An infinite beam resting on a modified Pasternak foundation and subjected to a concentrated load was treated by W.J. Rhines [7]. An exact solution in terms of an integral expression was obtained using the complex Fourier transform. However, no numerical solutions were presented. The infinite beam resting on a semi-infinite elastic continuum was studied by V.L. Rvachev [8,9]. He first obtained an exact expression for the pressure distribution at the interface in the form of an infinite series of Mathieu functions, then used it to obtain the deflections.

The analysis of beams resting on a semi-infinite elastic continuum may be simplified if approximations are made regarding the pressure distribution over the width of the beam. M.A. Biot [5] assumed a uniform pressure across the width of the beam. Since the deflection of the elastic continuum due to a uniform pressure is not a constant over the width of the beam, Biot used an average deflection as the deflection below the beam. A.B. Vesic [10] extended Biot's solution and evaluated numerically the integrals appearing in the solution. A.P. Fillippov [11] assumed that the pressure distribution as well as the deflection under the beam is uniform. Gorbunov-Posadov [12] also solved the above problem by assuming that the pressure distribution under the beam is the one that occurs under a rigid stamp.

A literature survey revealed that not much work has been done on the buckling of beams on elastic foundations. The few publications found were limited to two-dimensional foundations.

M. Hetényi [13] has analyzed the buckling of finite and infinite beams resting on a Winkler foundation. P. Csonka [14] determined the

buckling load of a simply supported beam assuming the existence of a rotationally elastic constraint. A method for obtaining the buckling load for a beam resting on a two-dimensional foundation, using a kernel function for the foundation response, was discussed by E. Reissner [6]. Recently, T.E. Smith [15] determined the buckling load for a simply supported beam resting on a two-dimensional foundation by using the kernel function suggested by K. Wieghardt [16]. As shown in ref. [1], this kernel represents the response of the two-dimensional Pasternak foundation.

The present paper deals with the determination of the buckling loads for infinitely long beams resting on elastic foundations. It is assumed that the buckling takes place at the onset of neutral equilibrium. The foundation models that are used to approximate the behavior of the supporting medium are the Winkler, Pasternak, and the elastic continuum. The effect of extending the foundation beyond the width of the beam is determined by comparing the results obtained for two and three-dimensional foundations.

It is well known that the buckling mode for an infinitely long beam supported by a uniform Winkler foundation is periodic. Therefore, for the buckling analysis of the infinite beam, the Fourier series is used in the longitudinal direction and the complex Fourier transform is used in the transverse direction.

BUCKLING OF AN INFINITE BEAM RESTING ON A WINKLER FOUNDATION

The differential equation for the deflection $w(x)$ of a beam of width $2b$ subjected to an axial load N and supported by a Winkler foundation is

$$EI \frac{d^4 w}{dx^4} + N \frac{d^2 w}{dx^2} + (2bk)w = 0 \tag{1}$$

where k is the spring constant. The buckling load is according to [13]

$$N_{cr} = 2 \sqrt{EI(2bk)} \tag{2}$$

BUCKLING OF AN INFINITE BEAM RESTING ON A PASTERNAK FOUNDATION

Two types of problems are considered, depending on the continuity of the foundation in the lateral direction of the beam: 1) when the foundation is only under the beam and 2) when the foundation extends beyond the width of the beam.

1. <u>Beam resting on a two-dimensional foundation</u>

Consider a beam resting on a deep wall whose behavior may be approximated by a Pasternak foundation as shown in Fig. 1. The differential equation for the beam is

$$EI \frac{d^4 w}{dx^4} + N \frac{d^2 w}{dx^2} = - 2b\ p(x) \tag{3}$$

where p(x) is a uniform interface pressure. The differential equation for the foundation is

$$kw - G \frac{d^2 w}{dx^2} = p(x) \tag{4}$$

Substituting for p(x) the expression (4) into (3) it follows that

$$EI \frac{d^4 w}{dx^4} + (N-2bG) \frac{d^2 w}{dx^2} + (2bk)w = 0 \tag{5}$$

The regularity conditions are

$$\lim_{x \to \pm\infty} \left\{ w(x),\ \frac{dw}{dx}, \ldots \right\} = \text{finite} \tag{6}$$

Substituting

$$w(x) = \sum_{n=0}^{\infty} w_n \cos(\alpha_n x) \tag{7}$$

in (5) we get

$$\sum_{n=0}^{\infty} [EI\ \alpha_n^4 - (N-2bG)\ \alpha_n^2 + 2bk] w_n \cos(\alpha_n x) = 0 \tag{8}$$

Since $\left\{\cos(\alpha_n x)\right\}$ is a linearly independent set, the coefficient of each term should vanish separately [17]. Therefore, from (8) it follows that

$$N = 2bG + EI\ \alpha_n^2 + \frac{2bk}{\alpha_n^2} \tag{9}$$

The value of α_n which makes N a minimum is obtained from

$$\frac{dN}{d\alpha_n} = 0 \tag{10}$$

The equation (10) yields

$$\alpha_n^4 = \frac{2bk}{EI} \tag{11}$$

Substituting (11) into (9), the buckling load is obtained as

$$N_{cr} = 2bG + 2\sqrt{EI(2bk)} \tag{12}$$

As pointed out in the introduction, after redefining the constants the equation (12) becomes identical to the result obtained by T.E. Smith [15].

2. <u>Beam resting on a three-dimensional Pasternak foundation</u>

A beam resting on a three-dimensional Pasternak foundation and subjected to an axial load is shown in Fig. 2. The shear layer and the springs are assumed to extend to infinity beyond the beam in the y direction. It is again assumed that the beam is infinitely long in the x direction and has a width 2b. The differential equation governing the deflection of the beam is

$$EI \frac{d^4 w_1}{dx^4} + N \frac{d^2 w_1}{dx^2} = - p_o(x) \tag{13}$$

where $p_o(x)$ is the contact pressure per unit length of beam axis. The differential equations for the foundation are, under the beam

$$G\left[\frac{\partial^2 w_1}{\partial x^2} + \frac{\partial^2 w_1}{\partial y^2}\right] - kw_1 = - p_1(x,y) \qquad -b < y < b \tag{14}$$

and outside the beam

$$G\left[\frac{\partial^2 w_2}{\partial x^2} + \frac{\partial^2 w_2}{\partial y^2}\right] - kw_2 = 0 \qquad |y| > b \tag{15}$$

where $w_1(x,y)$ is the deflection of the foundation below the beam, $w_2(x,y)$ is the deflection of the foundation outside the beam and $p_1(x,y)$ is the contact pressure at the interface. The corresponding regularity conditions are

$$\begin{aligned} &\lim_{x\to\pm\infty}\left\{w_1(x), \frac{\partial w_1}{\partial x}, \ldots\right\} = \text{finite} \\ &\lim_{x\to\pm\infty}\left\{w_2, \frac{\partial w_2}{\partial x}, \frac{\partial w_2}{\partial y}, \ldots\right\} = \text{finite} \\ &\lim_{y\to\pm\infty}\left\{w_2, \frac{\partial w_2}{\partial x}, \frac{\partial w_2}{\partial y}, \ldots\right\} = 0 \end{aligned} \tag{16}$$

The method of solution to be used in the following is;

1. First, the Fourier series for $w(x,y) = \sum_{n=0}^{\infty} w_n(y)\cos(\alpha_n x)$ in x direction and the complex Fourier transform in y direction are applied to the differential equation for the foundation and an algebraic relationship between the pressure p and the corresponding deflection w of the foundation under the beam is determined.

2. Next, the Fourier series for $w_1(x) = \sum_{n=0}^{\infty} w_{1n}\cos(\alpha_n x)$ and $p_o(x) = \sum_{n=0}^{\infty} p_{on}\cos(\alpha_n x)$ are applied to the differential equation for the beam. Noting the derived relationship between the pressure and the deflection of the foundation

under the beam obtained above, an expression for the axial load N in terms of α_n is obtained.

3. The minimum value of N which corresponds to the buckling load follows from the plot of the axial load N against α_n.

For complicated foundation models, the relationship between the pressure and the corresponding deflection of the foundation under the beam may be very involved. As pointed out in the introduction, to simplify the analysis it is often assumed that the pressure distribution below the beam is uniform. To study also the effect of this assumption, in the following, two cases are considered; i) exact analysis and ii) an approximate solution under the assumption of uniform pressure over the width of the beam.

i) <u>Exact analysis</u>

Consider a beam which is flexible in the longitudinal direction, rigid across the width, and supported by a three-dimensional Pasternak foundation. For this case the deflection of the foundation below the beam in the lateral direction is constant. The pressure distribution below the beam is not known.

The differential equations for the beam and for the foundation are given in (13), (14) and (15). Let

$$w_1(x,y) = \sum_{n=0}^{\infty} w_{1n}(y) \cos(\alpha_n x)$$

$$w_2(x,y) = \sum_{n=0}^{\infty} w_{2n}(y) \cos(\alpha_n x) \qquad (17)$$

$$p_1(x,y) = \sum_{n=0}^{\infty} p_{1n} \cos(\alpha_n x)$$

Substituting (17) into (14) and (15) we get

$$\sum_{n=0}^{\infty} \left[\frac{d^2 w_{1n}}{dy^2} - (\alpha_n^2 + k/G)w_{1n} + \frac{p_{1n}}{G}\right] \cos(\alpha_n x) = 0 \tag{18}$$

$$\sum_{n=0}^{\infty} \left[\frac{d^2 w_{2n}}{dy^2} - (\alpha_n^2 + k/G)w_{2n}\right] \cos(\alpha_n x) = 0 \tag{19}$$

Using the same argument that led to the equation (9) it follows from (18) and (19) that

$$\frac{d^2 w_{1n}}{dy^2} - (\alpha_n^2 + k/G)\, w_{1n} = - \frac{p_{1n}(y)}{G} \qquad -b \le y \le b \tag{20}$$

$$\frac{d^2 w_{2n}}{dy^2} - (\alpha_n^2 + k/G)\, w_{2n} = 0 \qquad |y| > b \tag{21}$$

Since the deflection of the foundation under the beam is equal to the deflection of the beam, $w_1(x,y)$ is independent of y in $-b \le y \le b$. It is also known that $p_1(x,y)$ is independent of y in $-b \le y \le b$. Therefore, (20) yields

$$p_{1n} = G(\alpha_n^2 + k/G)\, w_{1n} \tag{22}$$

The solution of (21), satisfying the regularity condition at $y = \infty$ and the continuity condition at $y = b$, namely

$$w_{2n}(b) = w_{1n} \tag{23}$$

is given by

$$w_{2n}(y) = w_{1n}\, e^{-\mu(y-b)/b} \tag{24}$$

where

$$\mu^2 = (\alpha_n b)^2 + \frac{kb^2}{G} \tag{25}$$

The discontinuity in slope along $y = \pm b$ will result in concentrated line reactions $p_2(x)$ along the edges $y = \pm b$. As shown in the Ref. [1], this concentrated reaction is given by

$$p_2(x) = - G \left.\frac{\partial w_2}{\partial y}\right|_{y=b} \tag{26}$$

Substituting

$$p_2(x) = \sum_{n=0}^{\infty} p_{2n} \cos(\alpha_n x) \tag{27}$$

and $w_2(x,y)$ as given in (17) into (26) we get

$$p_{2n} = - G \left.\frac{dw_{2n}}{dy}\right|_{y=b} \tag{28}$$

Using (24) in (28) it follows that

$$p_{2n} = \frac{G\mu}{b} w_{1n} \tag{29}$$

The total pressure $p_o(x)$ acting on any section of the beam is

$$p_o(x) = 2b\ p_1(x) + 2\ p_2(x) \tag{30}$$

Substituting for $p_1(x)$ and $p_2(x)$ from (17) and (27) respectively we obtain

$$p_o(x) = \sum_{n=0}^{\infty} (2b\ p_{1n} + 2\ p_{2n}) \cos(\alpha_n x) \tag{31}$$

Using the values for p_{1n} and p_{2n} in (31) from (22) and (29) respectively, it follows that

$$p_o(x) = \sum_{n=0}^{\infty} \frac{2G\mu(1+\mu)}{b} w_{1n} \cos(\alpha_n x) \tag{32}$$

The equation (32) is the desired relationship between the total pressure and the corresponding deflection of the foundation below the beam.

Consider the differential equation governing the deflection of the beam given in (13). Substituting for $w_1(x)$ as

$$w_1(x) = \sum_{n=0}^{\infty} w_{1n} \cos(\alpha_n x) \tag{33}$$

and for $p_o(x)$ from (32) into (13) it follows that

$$\sum_{n=0}^{\infty}\left[EI\,\alpha_n^4 - N\,\alpha_n^2 + \frac{2\mu G(1+\mu)}{b}\right] w_{1n}\cos(\alpha_n x) = 0 \tag{34}$$

Following the same argument that led to the equation (9), the above equation yields

$$EI\,\alpha_n^4 - N\,\alpha_n^2 + \frac{2G\mu(1+\mu)}{b} = 0 \tag{35}$$

The equation (35) yields

$$N = EI\,\alpha_n^2 + \frac{2\mu G(1+\mu)}{b\,\alpha_n^2} \tag{36}$$

The minimum value of N which corresponds to the buckling load is obtained by plotting the equation (36) as shown in Fig. 3. The final results are shown in Figs. 5, 6 and 7.

ii) <u>Uniform reaction across the width of the beam</u>

To determine the effect of an assumption usually made in the literature, in the following, the pressure distribution across the width of the beam is assumed to be uniform.

First, the relationship between the pressure distribution and the corresponding deflection of the foundation below the beam is determined. Fig. 4 shows a load $p(x,y)$ of arbitrary variation in x direction and uniform over the width 2b and acting on a Pasternak foundation. The differential equation for the deflection of the foundation is

$$G\left[\frac{\partial^2 w}{\partial x^2} + \frac{\partial^2 w}{\partial y^2}\right] - kw = -\,p(x,y) \qquad \begin{array}{l} -\infty \le x \le +\infty \\ -\infty \le y \le \infty \end{array} \tag{37}$$

Let

$$w(x,y) = \sum_{n=0}^{\infty} w_n(y) \cos(\alpha_n x)$$

$$p(x,y) = \sum_{n=0}^{\infty} p_n(y) \cos(\alpha_n x) \tag{38}$$

Substituting (38) into (37) we obtain

$$\frac{d^2 w_n}{dy^2} - (\alpha_n^2 + k/G)\, w_n = -\frac{p_n(y)}{G} \qquad -\infty \le y \le \infty \tag{39}$$

In the present case, since the deflection of the foundation and its derivatives are continuous and tend to zero as $y \to \infty$, we use the Fourier transform in y direction. Defining the Fourier transforms [18] of $w_n(y)$ and $p_n(y)$ in y direction as

$$\bar{w}_n(\beta) = \int_{-\infty}^{\infty} w_n(y)\, e^{i\beta y}\, dy \tag{40}$$

$$\bar{p}_n(\beta) = \int_{-\infty}^{\infty} p_n(y)\, e^{i\beta y}\, dy \tag{41}$$

the transform of (39) in the y direction becomes

$$(\beta^2 + \alpha_n^2 + k/G)\, \bar{w}_n(\beta) = \bar{p}_n(\beta)/G \tag{42}$$

Since $p(x,y)$ is uniform in $-b \le y \le b$ and zero for $|y| > b$, it is a function of x only. Hence the equation (41) yields

$$\bar{p}_n(\beta) = p_n \int_{-b}^{b} e^{i\beta y}\, dy = \frac{2\sin(\beta b)}{\beta} \cdot p_n \tag{43}$$

Substituting for $\bar{p}_n(\beta)$ from (43) into (42) we obtain

$$\bar{w}_n(\beta) = \frac{2\sin(\beta b)}{\beta(\beta^2 + \alpha_n^2 + k/G)} \cdot \frac{p_n}{G} \tag{44}$$

Noting the inverse transform of $\bar{w}_n(\beta)$ as

$$w_n(y) = \frac{1}{2\pi} \int_{-\infty}^{\infty} \bar{w}_n(\beta)\, e^{-i\beta y}\, d\beta \tag{45}$$

and substituting for $\bar{w}_n(\beta)$ from (44) into (45) it follows that

$$w_n(y) = \frac{2p_n}{\pi G} \int_0^{\infty} \frac{\sin(\beta b)\cos(\beta y)}{\beta[\beta^2 + \alpha_n^2 + k/G]}\, d\beta \tag{46}$$

Performing the indicated integration in (46) we obtain for $|y| < b$

$$w_n(y) = \frac{p_n b^2}{G\mu^2} \left\{1 - e^{-\mu} \cosh\left(\frac{\mu y}{b}\right)\right\} \tag{47}$$

where μ is defined in (25).

It is observed from (47) that the deflection of the foundation in the region $-b \le y \le b$ is not uniform. But for a beam, the deflection over its width is constant. In order to overcome this difficulty two procedures are used here ; a) assume that an average value of the deflection of the foundation across the width of the beam may be used as the deflection of the beam [5], or b) assume that the deflection of the foundation at $y = 0$ may be considered as the deflection of the beam [11].

a) Assuming that the average value of $w(x,y$ is

$$w_{av}(x) = \frac{1}{2b} \int_{-b}^{b} w(x,y)\, dy \tag{48}$$

and substituting for $w(x,y)$ from (38) into (48) it follows that

$$w_{av}(x) = \frac{1}{2b} \int_{-b}^{b} \left[\sum_{n=0}^{\infty} w_n(y) \cos(\alpha_n x)\right] dy \tag{49}$$

Substituting for $w_n(y)$ from (47) into (49) and after interchanging the integral sign with the summation sign, the integration of (49) yields

$$w_{av}(x) = \frac{b^2}{G} \sum_{n=0}^{\infty} \frac{1}{\mu^3} [\mu - e^{-\mu} \sinh(\mu)] \, p_n \cos(\alpha_n x) \tag{50}$$

Since

$$p(x) = \sum_{n=0}^{\infty} p_n \cos(\alpha_n x) \tag{51}$$

the equation (50) is the required relationship between the pressure and the deflection of the foundation.

The differential equation governing the deflection of the beam is given in (13). Noting that $w_1(x) = w_{av}(x)$ and $p_o(x) = 2b\, p(x)$ we get from (13)

$$EI \frac{d^4 w_{av}}{dx^4} + N \frac{d^2 w_{av}}{dx^2} = -\, 2b\, p(x) \tag{52}$$

Introducing (50) and (51) into (52) the resulting equation is satisfied if

$$EI\, \alpha_n^4 - N\, \alpha_n^2 + \frac{2G\mu^3}{b[\mu - e^{-\mu} \sinh(\mu)]} = 0 \tag{53}$$

From (53) it follows that

$$N = EI\, \alpha_n^2 + \frac{2G\mu^3}{[\mu - e^{-\mu} \sinh(\mu)]\, b\alpha_n^2} \tag{54}$$

The buckling load which corresponds to the minimum value of $\frac{Nb^2}{EI}$ is obtained by plotting the equation (54) and the numerical results are shown in Fig. 6.

b) Consider the case for which the deflection of the foundation at $y = 0$ is the deflection of the beam. Setting $y = 0$ in (47) and noting the first equation in (38) we get

$$w_1(x) = w(x,o) = \sum_{n=0}^{\infty} \frac{p_n b^2}{G\mu^2} \left\{1 - e^{-\mu}\right\} \tag{55}$$

Substituting the above expression in the differential equation for the beam given in (13), noting that $p_o(x) = 2b\, p(x)$ and that $p(x)$ is expressed in (51), it follows that

$$EI\, \alpha_n^2 - N\, \alpha_n^2 + \frac{2G\mu^2}{b[1-e^{-\mu}]} = 0 \tag{56}$$

The above equation yields

$$N = EI\, \alpha_n^2 + \frac{2G\mu^2}{b(1-e^{-\mu})\alpha_n^2} \tag{57}$$

The minimum value of N is obtained using the same procedure as used earlier. The numerical results are shown in Fig. 6.

BUCKLING OF AN INFINITE BEAM SUPPORTED BY A SEMI-INFINITE ELASTIC CONTINUUM

The effect of extending the foundation beyond the width of the beam is studied by considering an infinite beam resting on a two, as well as on a three-dimensional elastic continuum.

1. Beam resting on a two-dimensional elastic continuum

Consider an infinitely long compressed beam supported by an elastic continuum. It is assumed that the foundation extends to infinity in the x direction. In the y direction it coincides with the width of the beam. The differential equation for the beam is, as before

$$EI \frac{d^4 w_1}{dx^4} + N \frac{d^2 w_1}{dx^2} = - p_o(x) \tag{58}$$

The differential equation for the foundation in terms of the stress function F (plane stress) is

$$\frac{\partial^4 F}{\partial x^4} + 2 \frac{\partial^4 F}{\partial x^2 \partial z^2} + \frac{\partial^4 F}{\partial z^4} = 0 \tag{59}$$

The regularity conditions are

$$\lim_{x\to\pm\infty}\left\{w_1,\ \frac{dw_1}{dx},\ldots\right\} = \text{finite}$$

$$\lim_{x\to\pm\infty}\left\{\sigma_{xx},\ \sigma_{zz},\ \sigma_{xz}\right\} = \text{finite} \tag{60}$$

$$\lim_{z\to\pm\infty}\left\{\sigma_{xx},\ \sigma_{zz},\ \sigma_{xz}\right\} = 0$$

and the boundary conditions at $z = 0$ are

$$\begin{aligned} \sigma_{zz} &= -\ p(x) \\ \sigma_{xz} &= 0 \end{aligned} \tag{61}$$

Following the procedure used before, the buckling load is obtained as

$$\frac{N_{cr}b^2}{EI} = 3\left[\frac{E_f b^4}{2EI}\right]^{2/3} \tag{62}$$

where E_f is the Young's modulus of the elastic continuum. For more details, the reader is referred to [19].

The equation (62) is also obtained by E. Reissner who assumed that the infinite beam is supported by a two-dimensional elastic continuum and on an infinity of equidistant supports [6].

2. <u>Beam resting on a three-dimensional elastic continuum</u>

Consider an infinite beam of width 2b lying on an elastic continuum and subjected to an axial load as shown in Fig. 8. The foundation is assumed to extend beyond the beam to infinity in y direction. The differential equation for the beam is, as before

$$EI\frac{d^4 w_1}{dx^4} + N\frac{d^2 w_1}{dx^2} = -\ p_o(x) \tag{63}$$

The regularity conditions are

$$\lim_{x\to\pm\infty}\left\{w_1(x),\ \frac{dw_1}{dx},\ldots\right\} = \text{finite} \tag{64}$$

We shall first determine the relationship between the surface deflection of the elastic continuum and the distribution of pressure acting on the surface. The differential equations governing the displacements of the continuum are [20]

$$\nabla^2 u + \frac{1}{1 - 2\nu} \frac{\partial e}{\partial x} = 0 \tag{65}$$

$$\nabla^2 v + \frac{1}{1 - 2\nu} \frac{\partial e}{\partial y} = 0 \tag{66}$$

$$\nabla^2 w + \frac{1}{1 - 2\nu} \frac{\partial e}{\partial z} = 0 \tag{67}$$

where u, v and w are displacements in x, y and z directions respectively and

$$e = \frac{\partial u}{\partial x} + \frac{\partial v}{\partial y} + \frac{\partial w}{\partial z}$$

$$\nabla^2 = \frac{\partial^2}{\partial x^2} + \frac{\partial^2}{\partial y^2} + \frac{\partial^2}{\partial z^2}$$

The boundary conditions at z = 0 are

$$\sigma_{zz} = \begin{cases} -p_1(x,y) & -b \le y \le b \\ 0 & |y| > b \end{cases} \tag{68}$$

$$\sigma_{xz} = 0 \tag{69}$$

$$\sigma_{yz} = 0 \tag{70}$$

The regularity conditions are

$$\begin{aligned} &\lim_{x \to \pm\infty} \{u,\ v,\ w, \ldots\} = \text{finite} \\ &\lim_{\substack{y \to \pm\infty \\ z \to +\infty}} \{u,\ v,\ w, \ldots\} = 0 \end{aligned} \tag{71}$$

The volumetric expansion e satisfies

$$\frac{\partial^2 e}{\partial x^2} + \frac{\partial^2 e}{\partial y^2} + \frac{\partial^2 e}{\partial z^2} = 0 \tag{72}$$

with the corresponding conditions at infinity, namely

$$\lim_{x\to\pm\infty} e(x,y,z) = \text{finite}$$

$$\lim_{\substack{y\to\pm\infty \\ z\to+\infty}} e(x,y,z) = 0 \tag{73}$$

Since u, v and w are assumed to be periodic in x direction, e also should be periodic in x. Let

$$e(x,y,z) = \sum_{n=0}^{\infty} e_n(y,z) \cos(\alpha_n x) \tag{74}$$

Substituting the value for e(x,y,z) from (74) into (72), we obtain

$$\frac{\partial^2 e_n}{\partial z^2} + \frac{\partial^2 e_n}{\partial y^2} - \alpha_n^2 e_n = 0 \tag{75}$$

Defining the transform of $e_n(y,z)$ in y direction as

$$\bar{e}_n(\beta,z) = \int_{-\infty}^{\infty} e_n(y,z)\, e^{i\beta y}\, dy \tag{76}$$

the transforms of equations (75) and (73) become

$$\frac{d^2 \bar{e}_n}{dz^2} - (\alpha_n^2 + \beta^2)\, \bar{e}_n = 0 \tag{77}$$

$$\lim_{z\to\infty} \bar{e}_n(\beta,z) = 0 \tag{78}$$

The solution of (77) satisfying (78) is

$$\bar{e}_n(\beta,z) = C_{1n}(\alpha_n,\beta)\, e^{-az} \tag{79}$$

where

$$a^2 = \alpha_n^2 + \beta^2 \tag{80}$$

Let

$$u(x,y,z) = \sum_{n=0}^{\infty} u_n(y,z) \sin(\alpha_n x)$$

$$v(x,y,z) = \sum_{n=0}^{\infty} v_n(y,z) \cos(\alpha_n x) \tag{81}$$

$$w(x,y,z) = \sum_{n=0}^{\infty} w_n(y,z) \cos(\alpha_n x)$$

Substituting (81) and (74) into (65), (66) and (67) and noting that $\left\{\cos(\alpha_n x)\right\}$ and $\left\{\sin(\alpha_n x)\right\}$ are linearly independent sets, it follows that

$$\frac{d^2 u_n}{dz^2} + \frac{d^2 u_n}{dy^2} - \alpha_n^2 u_n - \frac{\alpha_n e_n}{1 - 2\nu} = 0 \tag{82}$$

$$\frac{d^2 v_n}{dz^2} + \frac{d^2 v_n}{dy^2} - \alpha_n^2 v_n + \frac{1}{1 - 2\nu} \frac{\partial e_n}{dy} = 0 \tag{83}$$

$$\frac{d^2 w_n}{dz^2} + \frac{d^2 w_n}{dy^2} - \alpha_n^2 w_n + \frac{1}{1 - 2\nu} \frac{\partial e_n}{\partial z} = 0 \tag{84}$$

Let the Fourier transforms of u_n, v_n and w_n in the y direction be

$$\bar{u}_n(\beta,z) = \int_{-\infty}^{\infty} u_n(y,z)\, e^{i\beta y}\, dy$$

$$\bar{v}_n(\beta,z) = \int_{-\infty}^{\infty} v_n(y,z)\, e^{i\beta y}\, dy \tag{85}$$

$$\bar{w}_n(\beta,z) = \int_{-\infty}^{\infty} w_n(y,z)\, e^{i\beta y}\, dy$$

The transforms of (82), (83) and (84) in y direction and noting (79) become

$$\frac{d^2\bar{u}_n}{dz^2} - a^2\bar{u}_n = \frac{\alpha_n C_{1n}}{1 - 2\nu} e^{-az} \tag{86}$$

$$\frac{d^2\bar{v}_n}{dz^2} - a^2\bar{v}_n = \frac{i\beta C_{1n}}{1 - 2\nu} e^{-az} \tag{87}$$

$$\frac{d^2\bar{w}_n}{dz^2} - a^2\bar{w}_n = \frac{aC_{1n}}{1 - 2\nu} e^{-az} \tag{88}$$

where a^2 is defined in (80).

The solutions of (86), (87) and (88) satisfying the regularity conditions at $z = \infty$ are

$$\bar{u}_n(\beta, z) = \left[C_{2n} - \frac{\alpha_n C_{1n}}{2a(1-2\nu)} z\right]e^{-az} \tag{89}$$

$$\bar{v}_n(\beta, z) = \left[C_{3n} - \frac{i\beta C_{1n}}{2a(1-2\nu)} z\right]e^{-az} \tag{90}$$

$$\bar{w}_n(\beta, z) = \left[C_{4n} - \frac{aC_{1n}}{2a(1-2\nu)} z\right]e^{-az} \tag{91}$$

respectively.

The constants C_{1n}, C_{2n}, C_{3n} and C_{4n} are functions of α_n and β and are to be determined from the boundary conditions at the surface of the elastic continuum.

From the boundary conditions (69) and (70) it follows that at $z = 0$

$$\frac{\partial u}{\partial z} + \frac{\partial w}{\partial x} = 0 \tag{92}$$

$$\frac{\partial v}{\partial z} + \frac{\partial w}{\partial y} = 0 \tag{93}$$

According to the definition of the volumetric expansion, we have

$$\frac{\partial u}{\partial x} + \frac{\partial v}{\partial y} + \frac{\partial w}{\partial z} = e \tag{94}$$

Substituting (81) into (92), (93) and (94) and then using the transform in y direction on the resulting equations, it follows that

$$\left[\frac{d\bar{u}_n}{dz} - \alpha_n \bar{w}_n\right]_{z=0} = 0 \tag{95}$$

$$\left[\frac{d\bar{v}_n}{dz} - i\beta\bar{w}_n\right]_{z=0} = 0 \tag{96}$$

$$\frac{d\bar{w}_n}{dz} + \alpha_n \bar{u}_n - i\beta\bar{v}_n = \bar{e}_n \tag{97}$$

Substituting the expressions for $\bar{u}_n$, $\bar{v}_n$, $\bar{w}_n$ and $\bar{e}_n$ from (89), (90), (91) and (79) in the above equations it follows that

$$aC_{2n} + \alpha_n C_{4n} + \frac{\alpha_n C_{1n}}{2a(1-2\nu)} = 0$$

$$aC_{3n} + i\beta C_{4n} + \frac{i\beta C_{1n}}{2a(1-2\nu)} = 0 \tag{98}$$

$$-\alpha_n C_{2n} + i\beta C_{3n} + aC_{4n} + \left[1 + \frac{1}{2(1-2\nu)}\right]C_{1n} = 0$$

Solving for C_{2n}, C_{3n}, and C_{4n} in terms of C_{1n} we obtain

$$C_{2n} = \frac{\alpha_n}{2a^2} C_{1n}$$

$$C_{3n} = \frac{i\beta}{2a^2} C_{1n} \tag{99}$$

$$C_{4n} = -\frac{(1-\nu)}{a(1-2\nu)} C_{1n}$$

Substituting the above obtained constants in (89), (90) and (91), it follows that

$$\bar{u}_n(\beta,z) = \frac{\alpha_n C_{1n}}{2a(1-2\nu)}\left[\frac{1-2\nu}{a} - z\right]e^{-az} \tag{100}$$

$$\bar{v}_n(\beta,z) = \frac{i\beta C_{1n}}{2a(1-2\nu)}\left[\frac{1-2\nu}{a} - z\right]e^{-az} \tag{101}$$

$$\bar{w}_n(\beta,z) = -\frac{C_{1n}}{2(1-2\nu)}\left[\frac{2(1-\nu)}{a} + z\right]e^{-az} \tag{102}$$

In the above equations, the constant C_{1n} is still an unknown quantity. It is determined by using the remaining boundary condition given in (68).

According to Hooke's law,

$$\sigma_{zz} = (2\mu_f+\lambda_f)\frac{\partial w}{\partial z} + \lambda_f\left(\frac{\partial u}{\partial x} + \frac{\partial v}{\partial y}\right) \tag{103}$$

where λ_f and μ_f are Lamé constants. From (68) and (103) it follows that

$$\left[(2\mu_f+\lambda_f)\frac{\partial w}{\partial z} + \lambda_f\left(\frac{\partial u}{\partial x} + \frac{\partial v}{\partial y}\right)\right]_{z=0} = \begin{cases} -p_1(x,y) & -b \le y \le b \\ 0 & |y| > b \end{cases} \tag{104}$$

Substituting u, v and w from (81) into (104) we obtain

$$\sum_{n=0}^{\infty} \cos(\alpha_n x)\left[(2\mu_f+\lambda_f)\frac{\partial w_n}{\partial z} + \lambda_f\left(\alpha_n u_n + \frac{\partial v_n}{\partial y}\right)\right]_{z=0} = \begin{cases} -p_1(x,y) & -b \le y \le b \\ 0 & |y| > b \end{cases} \tag{105}$$

The transform of (105) in y direction becomes*

$$\sum_{n=0}^{\infty}\left[(2\mu_f+\lambda_f)\frac{d\bar{w}_n}{dz} + \lambda_f(\alpha_n\bar{u}_n - i\beta\bar{v}_n)\right]_{z=0}\cos(\alpha_n x) = -\bar{p}(x,\beta) \tag{106}$$

Substituting $\bar{u}_n$, $\bar{v}_n$ and $\bar{w}_n$ from (100), (101) and (102) into (106) it follows that

$$\sum_{n=0}^{\infty} C_{1n}(\alpha_n,\beta)\cos(\alpha_n x) = -\frac{\bar{p}(x,\beta)}{(\lambda_f+\mu_f)} \tag{107}$$

Since the pressure distribution below the beam is not known, it is not possible to determine $C_{1n}(\alpha_n,\beta)$ from (107).

Consider the pressure distribution below the beam

---

* The pressure distribution under a rigid stamp resting on a semi-infinite elastic continuum has infinite discontinuities along the edges of the stamp. Nevertheless, the application of the Fourier transform is valid because of theorem 47 of reference [21].

$$p(x,y) = \begin{cases} p_1(x,y) & -b \le y \le b \\ 0 & |y| > b \end{cases} \tag{108}$$

The inverse transform of $\bar{p}(x,\beta)$ in y direction is defined

$$p(x,y) = \frac{1}{2\pi} \int_{-\infty}^{\infty} \bar{p}(x,\beta)\, e^{-i\beta y}\, d\beta \tag{109}$$

Substituting the expression for $\bar{p}(x,\beta)$ given in (107) into (109) and noting (108) it follows that

$$\frac{(\lambda_f+\mu_f)}{2\pi} \int_{-\infty}^{\infty} \left[\sum_{n=0}^{\infty} C_{1n}(\alpha_n,\beta) \cos(\alpha_n x) \right] e^{-i\beta y}\, d\beta = \begin{cases} -p_1(x,y) & -b \le y \le b \\ 0 & |y| > b \end{cases} \tag{110}$$

Substituting z = 0 in (102) we get

$$\bar{w}_n(\beta,o) = -\frac{1-\nu}{1-2\nu} \cdot \frac{C_{1n}(\alpha_n,\beta)}{(\alpha_n^2+\beta^2)^{\frac{1}{2}}} \tag{111}$$

The inverse transform of $\bar{w}_n(\beta,o)$ in y direction is

$$w_n(y,o) = \frac{1}{2\pi} \int_{-\infty}^{\infty} \bar{w}_n(\beta,o)\, e^{-i\beta y}\, d\beta \tag{112}$$

Introducing the value of $\bar{w}_n(\beta,o)$ given in (111) into (112) it follows that

$$w_n(y,o) = -\frac{1-\nu}{2\pi(1-2\nu)} \int_{-\infty}^{\infty} \frac{C_{1n}(\alpha_n,\beta)}{(\alpha_n^2+\beta^2)^{\frac{1}{2}}}\, e^{-i\beta y}\, d\beta \tag{113}$$

Multiplying both sides of (113) by $\cos(\alpha_n x)$ and summing over n = 0 to n = ∞ and noting that

$$w(x,y,o) = \sum_{n=0}^{\infty} w_n(y,o) \cos(\alpha_n x) \tag{114}$$

it follows that

$$w(x,y,o) = -\frac{1-\nu}{2\pi(1-2\nu)} \sum_{n=0}^{\infty} \cos(\alpha_n x) \int_{-\infty}^{\infty} \frac{C_{1n}(\alpha_n,\beta)}{(\alpha_n^2+\beta^2)^{\frac{1}{2}}} e^{-i\beta y}\, d\beta \tag{115}$$

The surface deflection of the foundation below the beam is equal to the deflection of the beam but is not known away from the beam. Since the deflection of the foundation across the width of the beam is not a function of y, we have

$$w(x,y,o) = \begin{cases} w_1(x) & -b \le y \le b \\ w_2(x,y) & |y| > b \end{cases} \tag{116}$$

where $w(x,y,o)$ is the surface deflection of the foundation, $w_1(x)$ is the deflection of the foundation under the beam, and $w_2(x,y)$ is the deflection of the foundation outside the beam. From (115) and (116) it follows that

$$\frac{1-\nu}{2\pi(1-2\nu)} \sum_{n=0}^{\infty} \cos(\alpha_n x) \int_{-\infty}^{\infty} \frac{C_{1n}(\alpha_n,\beta)}{(\alpha_n^2+\beta^2)^{\frac{1}{2}}} e^{-i\beta y}\, d\beta = \begin{cases} -w_1(x) & -b \le y \le b \\ -w_2(x,y) & |y| > b \end{cases} \tag{117}$$

Combining the equations (110) and (117) results in the following pair of integral equations for the determination of the constant $C_{1n}(\alpha_n,\beta)$

$$\int_{-\infty}^{\infty} \left[\sum_{n=0}^{\infty} C_{1n}(\alpha_n,\beta) \cos(\alpha_n x) \right] e^{-i\beta y}\, d\beta = 0 \qquad |y| > b \tag{118}$$

$$\int_{-\infty}^{\infty} \left[\sum_{n=0}^{\infty} \frac{C_{1n}(\alpha_n,\beta) \cos(\alpha_n x)}{(\alpha_n^2+\beta^2)^{\frac{1}{2}}} \right] e^{-i\beta y}\, d\beta = -\frac{2\pi(1-2\nu)}{(1-\nu)} w_1(x) \qquad -b \le y \le b \tag{119}$$

where

$$w_1(x) = \sum_{n=0}^{\infty} w_{1n} \cos(\alpha_n x) \tag{120}$$

The solution of the above pair of integral equations yields $C_{1n}(\alpha_n,\beta)$ in terms w_{1n}. Substituting this value of $C_{1n}(\alpha_n,\beta)$ into (107), we obtain the relationship between the pressure $\bar{p}(x,\beta)$ and the surface deflection of the foundation below the beam.

The solution of the above pair of integral equations is not available in the literature and was not obtained by the author. Therefore, the exact relationship between $\bar{p}(x,\beta)$ and $w_1(x)$ remains unknown.

From the results of the buckling loads for a beam resting on a Pasternak foundation, it may be concluded that if the pressure distribution across the width of the beam is assumed to be uniform, then the obtained buckling loads for a beam on a three-dimensional elastic continuum differs very little from the exact ones (See Fig. 6). Therefore, the following two cases are considered here; i) at each point along the length of the beam the contact pressure is uniform across the width of the beam [5,11] and ii) at each point along the length of the beam the pressure distribution is the one that occurs under a rigid stamp [12].

i) <u>Uniform reaction force over the width of the beam</u>

It is assumed that

$$p(x,y) = \begin{cases} p_1(x) & -b \le y \le b \\ 0 & |y| > b \end{cases} \tag{121}$$

The transform of $p(x,y)$ in y direction is

$$\bar{p}(x,\beta) = \int_{-\infty}^{\infty} p(x,y)\, e^{i\beta y}\, dy \tag{122}$$

Substituting the expression for $p(x,y)$ given in (120) into (121) and performing the integration, we obtain

$$\bar{p}(x,\beta) = \frac{2\sin(\beta b)}{\beta}\, p_1(x) \tag{123}$$

Using the above value of $\bar{p}(x,\beta)$ in (107) it follows that

$$\sum_{n=0}^{\infty} C_{1n}(\alpha_n,\beta)\cos(\alpha_n x) = -\frac{2}{(\lambda_f+\mu_f)}\cdot\frac{\sin(\beta b)}{\beta}\, p_1(x) \tag{124}$$

Multiplying both sides of (123) by $e^{-i\beta y}$ and integrating with respect to β between the limits $-\infty$ and $+\infty$ we get

$$\int_{-\infty}^{\infty}\left[\sum_{n=0}^{\infty} C_{1n}(\alpha_n,\beta)\cos(\alpha_n x)\right]e^{-i\beta y}\,d\beta = -\frac{2p_1(x)}{(\lambda_f+\mu_f)}\int_{-\infty}^{\infty}\frac{\sin(\beta b)}{\beta}e^{-i\beta y}\,d\beta \qquad (125)$$

Performing the integration, it can be shown that the right hand side vanishes for $y > b$.

From (124) and (125) it follows that the first of the pair of integral equations, namely (118), is satisfied.

Again multiplying both sides of (123) by $\frac{e^{-i\beta y}}{(\alpha_n^2+\beta^2)^{\frac{1}{2}}}$ and integrating with respect to β between $-\infty$ and $+\infty$ and noting (119) it follows that

$$w_1(x,y) = \frac{2(1-\nu^2)}{\pi E_f}\,p_1(x)\int_{-\infty}^{\infty}\frac{\sin(\beta b)}{\beta[\alpha_n^2+\beta^2]^{\frac{1}{2}}}e^{-i\beta y}\,d\beta \qquad (126)$$

In obtaining the above equation, the following relationship between the Lamé constants and E_f and ν has been used [20]

$$\lambda_f + \mu_f = \frac{E_f}{2(1+\nu)(1-2\nu)} \qquad (127)$$

It should be noted that in (119) w_1 is a function of x only, whereas in (126) it is a function of x and y. This is due to the assumption that the pressure distribution acorss the width of the beam is uniform.

Because of the assumption that the contact pressure is uniform across the width, the deflection of the surface of the foundation below the beam is not constant. To overcome this difficulty, as before, one

can proceed in two ways. One method is to use an average value of the deflection of the surface of the foundation below the beam as the deflection of the beam [5]. Another method is to consider the surface deflection of the foundation at $y = 0$ as the deflection below the beam [11].

Consider the average value of the deflection of the surface of the foundation below the beam as the deflection of the beam. The average deflection of the foundation is

$$w_{av}(x) = \frac{1}{2b} \int_{-b}^{b} w_1(x,y)\, dy \tag{128}$$

Substituting $w_1(x,y)$ given in (126) into (128) and integrating between the limits shown we obtain

$$w_{av}(x) = \frac{4(1-\nu^2)}{\pi E_f} \frac{p_1(x)}{2b} \int_{-\infty}^{\infty} \frac{\sin^2(\beta b)}{\beta^2[\alpha_n^2+\beta^2]^{\frac{1}{2}}}\, d\beta \tag{129}$$

Rearranging (129) we get

$$p_1(x) = \frac{\pi E_f}{4b(1-\nu^2)} \cdot \frac{w_{av}(x)}{\psi(\alpha_n b)} \tag{130}$$

where

$$\psi(\alpha_n b) = \int_{0}^{\infty} \frac{\sin^2(\rho)}{\rho^2[(\alpha_n b)^2 + \rho^2]^{\frac{1}{2}}}\, d\rho \tag{131}$$

The equation (130) is the sought relationship between the pressure distribution at the interface and the surface deflection of the foundation below the beam.

The differential equation governing the deflection of the beam, noting $w_1(x) = w_{av}(x)$ and $p_o(x) = 2b\, p_1(x)$ is

$$EI \frac{d^4 w_{av}}{dx^4} + N \frac{d^2 w_{av}}{dx^2} = - 2b \; p_1 (x) \tag{132}$$

Substituting the value for $p_1(x)$ given in (130) into (132) and noting that

$$w_{av}(x) = \sum_{n=0}^{\infty} [w_{av}]_n \cos(\alpha_n x) \tag{133}$$

we obtain

$$\sum_{n=0}^{\infty} \left[EI \, \alpha_n^4 - N \, \alpha_n^2 + \frac{\pi E_f}{2(1-\nu^2)} \frac{1}{\psi(\alpha_n b)} \right] [w_{av}]_n \cos(\alpha_n x) = 0 \tag{134}$$

Using the same argument that led to the equation (9), from (134) it follows that

$$N = EI \, \alpha_n^2 + \frac{\pi E_f}{2(1-\nu^2)} \cdot \frac{1}{\psi(\alpha_n b)\alpha_n^2} \tag{135}$$

Using the equation (135), a plot of $\frac{Nb^2}{EI}$ against $(\alpha_n b)$ is obtained. The buckling load which corresponds to the minimum value of $\frac{Nb^2}{EI}$ is obtained from the graph. The results are presented in Fig. 9.

Consider the case in which the surface deflection of the foundation at $y = 0$ is used as the corresponding deflection of the beam. From (126) it follows that

$$p_1(x) = \frac{\pi E_f}{4b(1-\nu^2)} \frac{w_1(x,o)}{\Phi(\alpha_n b)} \tag{136}$$

where

$$\Phi(\alpha_n b) = \int_o^{\infty} \frac{\sin(\rho)}{\rho[(\alpha_n b)^2 + \rho^2]^{\frac{1}{2}}} \, d\rho \tag{137}$$

A. P. Fillippov [11] obtained the equation (136) by using a different approach.

From (132) and (136) and noting $w_1(x)$ is

$$w_1(x) = \sum_{n=0}^{\infty} w_{1n} \cos(\alpha_n x) \tag{138}$$

it follows that

$$N = EI\,\alpha_n^2 + \frac{\pi E_f}{2(1-\nu^2)} \frac{1}{\Phi(\alpha_n b)} \alpha_n^2 \tag{139}$$

The results obtained from (139) are shown in Fig. 9 .

ii) <u>Pressure distribution that occurs below a rigid stamp</u>

The pressure distribution that occurs below a rigid stamp resting on an elastic half-space was obtained by M. Sadowski [22]

$$p(x,y) = \begin{cases} \dfrac{p_o(x)}{\pi(b^2-y^2)^{\frac{1}{2}}} & -b \le y \le b \\ 0 & |y| > b \end{cases} \tag{140}$$

where $p_o(x)$ is the reactive pressure per unit length acting on the beam. Recalling the definition of the Fourier transform of $p(x,y)$ in the y direction

$$\bar{p}(x,\beta) = \int_{-\infty}^{\infty} p(x,y)\, e^{i\beta y}\, dy \tag{141}$$

and substitution of $p(x,y)$ from (140) into (141) yields

$$\bar{p}(x,\beta) = \frac{2p_o(x)}{\pi} \int_o^b \frac{\cos(\beta y)}{(b^2-y^2)^{\frac{1}{2}}}\, dy \tag{142}$$

performing the integration in (142) we obtain

$$\bar{p}(x,\beta) = J_o(\beta b)\cdot p_o(x) \tag{143}$$

From the equations (107) and (143) it follows that

$$\sum_{n=0}^{\infty} C_{1n}(\alpha_n,\beta) \cos(\alpha_n x) = -\frac{J_o(\beta b)}{(\lambda_f+\mu_f)} \cdot p_o(x) \tag{144}$$

Multiplying both sides of (144) by $e^{-i\beta y}$ and integrating with respect to β between $-\infty$ and $+\infty$ we get

$$\int_{-\infty}^{\infty} \left[\sum_{n=0}^{\infty} C_{1n}(\alpha_n,\beta) \cos(\alpha_n x) \right] e^{-i\beta y} \, d\beta$$

$$= - \frac{p_o(x)}{\lambda_f + \mu_f} \int_{-\infty}^{\infty} J_o(\beta b) \, e^{-i\beta y} \, d\beta \tag{145}$$

Referring to Tables [23], page 730, we find

$$\int_{o}^{\infty} J_o(\beta b) \cos(\beta y) \, d\beta = 0 \qquad y > b \tag{146}$$

From (145) and (146) it follows that (118) is satisfied.

Again, multiplying both sides of (144) by $\frac{e^{-i\beta y}}{(\alpha_n^2+\beta^2)^{\frac{1}{2}}}$ and integrating with respect to β between $-\infty$ and $+\infty$ and noting (119) we get for $-b \le y \le b$

$$w_1(x,y) = p_o(x) \frac{1-\nu^2}{\pi E_f} \int_{-\infty}^{\infty} \frac{J_o(\beta b)}{(\alpha_n^2+\beta^2)^{\frac{1}{2}}} e^{-i\beta y} \, d\beta \tag{147}$$

As before, the surface deflection of the foundation in the region $-b \le y \le b$ depends on y, whereas the deflection of the beam is constant. Therefore, we consider the average of the deflection of the surface of the foundation in $-b \le y \le b$ as the deflection of the beam. Integrating (147) with respect to y between the limits $-b \le y \le b$ and dividing by 2b, it follows that

$$w_{av}(x) = \frac{p_o(x)}{2b} \frac{2(1-\nu^2)}{\pi E_f} \int_{-\infty}^{\infty} \frac{J_o(\beta b) \sin(\beta b)}{\beta(\alpha_n^2+\beta^2)^{\frac{1}{2}}} \, d\beta \tag{148}$$

Rearranging (148) we get

$$p_o(x) = \frac{\pi E_f}{2(1-\nu^2)} \frac{w_{av}(x)}{\varphi(\alpha_n b)} \tag{149}$$

where

$$\varphi(\alpha_n b) = \int_0^\infty \frac{J_0(\rho)\ \sin(\rho)}{\rho[(\alpha_n b)^2 + \rho^2]^{\frac{1}{2}}}\ d\rho \tag{150}$$

Equation (149) is the required relationship between the total pressure acting on any section of the beam and the surface deflection of the foundation below the beam.

The differential equation for a beam in terms of the average deflection is given in (132). Noting that $p_o(x) = 2b\ p_1(x)$ and that

$$w_{av} = \sum_{n=0}^{\infty} [w_{av}]\ \cos(\alpha_n x)$$

the equations (132) and (149) yield

$$N = EI\ \alpha_n^2 + \frac{\pi E_f}{2(1-\nu^2)} \frac{1}{\varphi(\alpha_n b)\alpha_n^2} \tag{151}$$

The equation (151) is used to obtain a plot of $\frac{Nb^2}{EI}$ against $(\alpha_n b)$. The buckling load which corresponds to the minimum value of $\frac{Nb^2}{EI}$ is obtained from the above plot. Final results are shown in Fig. 9.

Discussion of results

The buckling loads for a beam supported by a Pasternak foundation are computed for different values of spring parameter and shear parameter, using the equations (36) and (57). The results are shown in Figs. 5, 6 and 7.

The effect of extending the foundation beyond the width of the beam is shown in Figs. 5 and 7. As expected, the buckling loads for beams supported by a three-dimensional foundation are larger than the corresponding buckling loads of a beam on a two-dimensional foundation. It is observed that for constant foundation parameter k, the buckling load increases with increasing G. For example, for $k = \frac{4EI}{b^5} \times 10^{-6}$, the buckling load

is about twice as large as when $G = \frac{EI}{b^3} \times 10^{-4}$ compared to the buckling load when $G = \frac{EI}{b^3} \times 10^{-6}$.

From Fig. 5, it is also observed that in the case when the foundation is two-dimensional, the different values of G do not very much effect the buckling load. This becomes even more obvious when the buckling loads for the two-dimensional foundation are compared with the buckling loads of the Winkler foundation, which is also shown in Fig. 5.

In order to show the effect of used approximations, the buckling loads obtained from the exact and approximate analyses for a beam resting on a Pasternak foundation are shown in Fig. 6. It is found that the introduced approximations have a very small effect on the determined buckling loads. For example, when $G = \frac{EI}{b^3} \times 10^{-6}$ and $k = \frac{EI}{b^5} \times 10^{-6}$, the buckling load obtained from the exact analysis is 4.0×10^{-3} and from the approximate analysis, in which the average deflection of the foundation below the beam is used as the deflection of the beam is 3.8×10^{-3} The difference for the above case is 6% . It is also seen from Fig. 6 that, of the two approximate analyses used, the one which assumes that the average deflection of the foundation below the beam is the deflection of the beam gives the better approximation.

The buckling loads for a beam resting on the semi-infinite elastic continuum are obtained for different values of the foundation parameter using the equations (62), (135), (139) and (151). The results are presented in Fig. 9. As expected the buckling loads for a beam on a semi-infinite elastic continuum are larger than the corresponding buckling loads of a beam on a two-dimensional elastic continuum. It is found that the difference in the buckling load between the semi-infinite elastic continuum and the two-dimensional foundation increases with the foundation parameter E_1^*, i.e. for a given ν, as the modulus of the foundation

increases the above difference in the buckling load increases.

The buckling loads obtained from [illegible]ng the different approximate analyses are also shown in Fig. 9. The difference in the buckling loads obtained from the various approximate analyses are very small for assumed values of the foundation parameters.

On the basis of the results obtained for the case of the Pasternak foundation, it is expected that the buckling load for a beam on a semi-infinite elastic continuum obtained by using the assumption of uniform reaction together with the average deflection of the foundation will be close to the exact solution.

ACKNOWLEDGMENT

The author is grateful to Professor Arnold D. Kerr for suggesting the problem, for his guidance and valuable discussions during the course of this research.

REFERENCES

[1] Kerr, A.D., "Elastic and Viscoelastic Foundation Models", Transactions, ASME, Journal of Applied Mechanics, Vol. 31, No. 3, 1964, pp. 491-498.

[2] Winkler, E., "Die Lehre von der Elastizität und Festigkeit", H. Dominicus, Prag, 1867, pp. 182-184.

[3] Pasternak, P.L., "On a New Method of Analysis of an Elastic Foundation by means of Two Foundation Constants" (in Russian), Gosudarstvennoe Izdatelstvo Literaturi po Stroitelstvu i Arkhitekture, Moscow, U.S.S.R., 1954.

[4] Kerr, A.D., "A Study of a New Foundation Model", Acta Mechanica, Vol. I/2, 1965, pp. 135-147.

[5] Biot, M.A., "Bending of an Infinite Beam on an Elastic Foundation", Transactions, ASME, Journal of Applied Mechanics, Vol. 59, 1937, pp. A1-A7.

[6] Reissner, E., "On the Theory of Beams Resting on a Yielding Foundation", Proceedings, National Academy of Sciences, Vol. 23, 1937, pp. 328-333.

[7] Rhines, W.J., "Foundation Models for Continuously Supported Structures", Ph.D. Thesis, School of Engineering and Science, New York University, New York, September 1965.

[8] Rvachev, V.L., "Pressure on an Elastic Half-space in the Form of a strip" (in Russian), Prikl. Mat. Mekh., Vol. 20, No. 2, 1956, pp. 248-254.

[9] Rvachev, V.L., "On the Analysis of the Infinite Beam on an Elastic Half-space" (in Russian), Prikl. Mat. Mekh., Vol. 20, No. 5, 1956, pp. 667-669.

[10] Vesic, A.B., "Bending of Beams Resting on Isotropic Elastic Solid", Journal of the Engineering Mechanics Division, ASCE, Vol. 87, 1961, pp. 35-53.

[11] Fillippov, A.P., "Infinitely Long Beam on the Elastic Half-space" (in Russian), Prikl. Mat. Mekh., Novaya Seriya, 6, 1942.

[12] Gorbunov-Posadov, M.I., "Analysis of Structures on Elastic Foundation" (in Russian), Gos. Izd. Lit. Stroit. Arkh., Moscow, 1953.

[13] Hetényi, M., "Beams on Elastic Foundation", The University of Michigan Press, Ann Arbor, Michigan, 1946.

[14] Csonka, P., "Buckling of a Column Elastically Restrained along its Entire Length" (in Hungarian), Magyar Tudományos Akademia Muszaki Tudományos Osztalyának Közlémenye, 29, 1/4, 1961.

[15] Smith, T.E., "Buckling of a Beam on a Wieghardt Type Elastic Foundation", ZAMM, Vol. 49, No. 11, 1969, pp. 641-645.

[16] Wieghardt, K., "Uber den Balken auf Nachgiebiger Unterlage", ZAMM, Vol. 2, No. 3, 1922, pp. 165-184.

[17] Shilov, G.E., "An Introduction to the Theory of Linear Spaces", 5th printing, Prentice-Hall, Inc., New Jersey, 1965, pp. 141.

[18] Sneddon, I.N., "Fourier Transforms", McGraw-Hill Book Company, Inc., New York, 1951.

[19] Narasimha Murthy, G.K., "Buckling of Continuously Supported Beams", Ph.D. Thesis, School of Engineering and Science, New York University, New York, July 1970.

[20] Timoshenko, S., and Goodier, J.N., "Theory of Elasticity", 2nd edition, McGraw-Hill Book Company, Inc., New York, 1951.

[21] Titchmarsh, E.C., "Introduction to the Theory of Fourier Integrals", 2nd edition, Oxford at the Clarendon Press, 1948, pp. 66-68.

[22] Sadowsky, M., "Zweidimensionale Probleme der Elastizitätstheorie", ZAMM, No. 8, Vol. 2, 1928.

[23] Gradshteyn, I.S., and Ryzhik, I.M., "Table of Integrals, Series and Products", 4th Edition, Academic Press, New York and London, 1965.

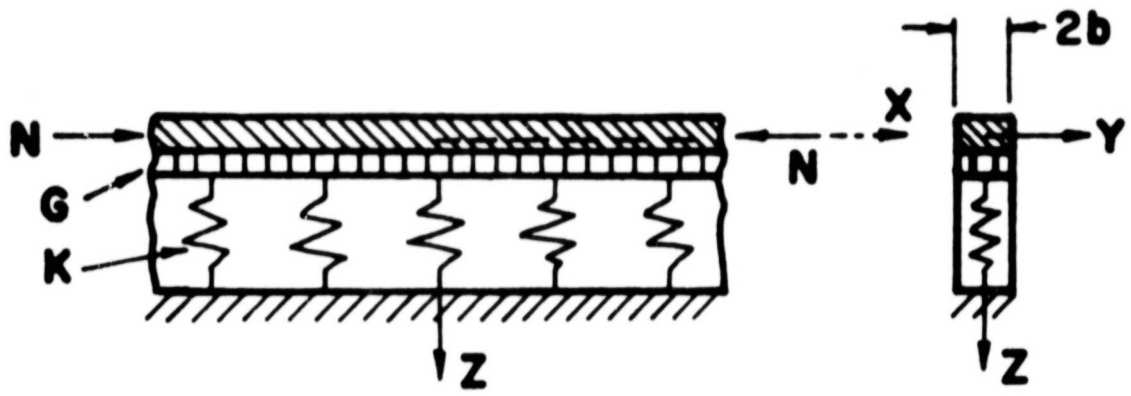

Fig. 1 Beam on a two-dimensional Pasternak foundation

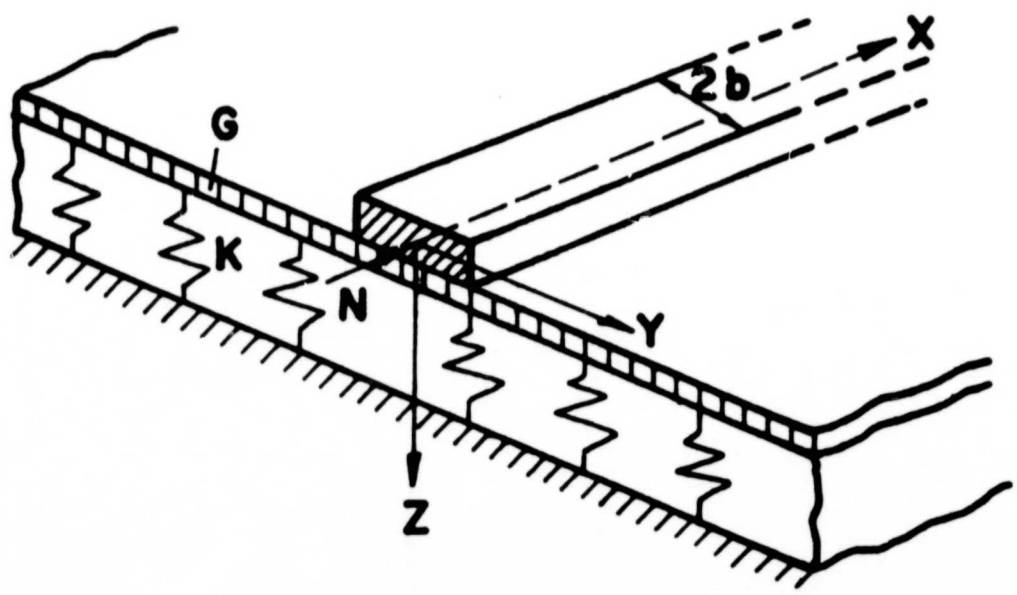

Fig. 2 Beam on a three-dimensional Pasternak foundation

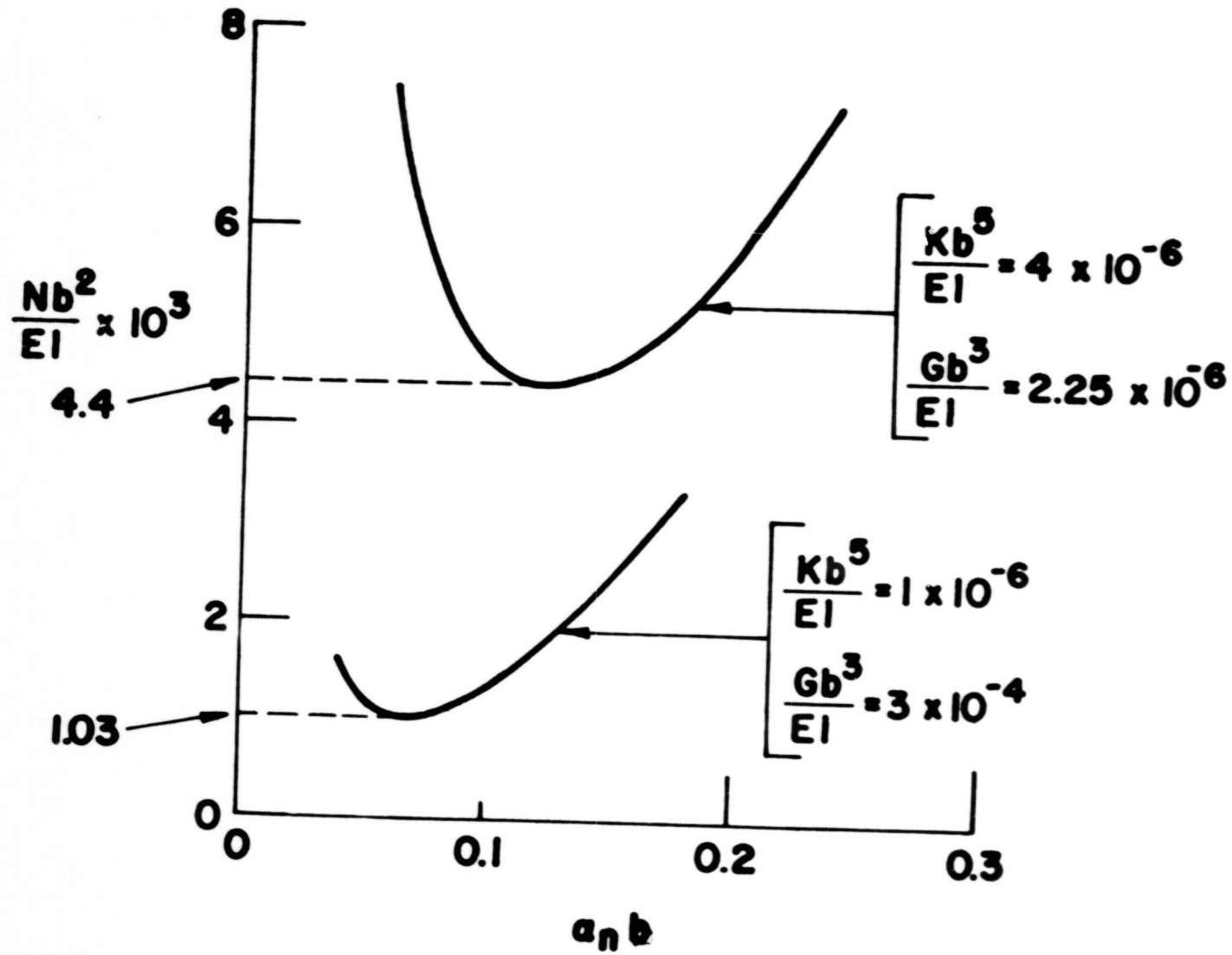

Fig. 3 A plot to find the minimum value of N

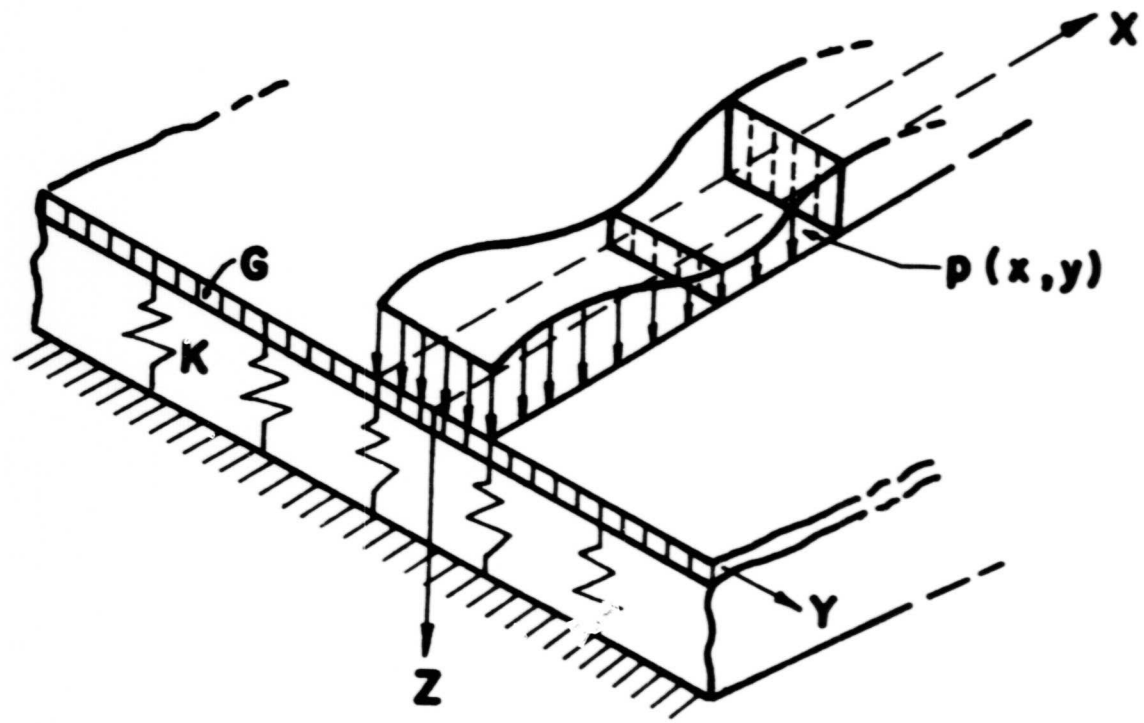

Fig. 4 Reaction force on a three-dimensional Pasternak foundation

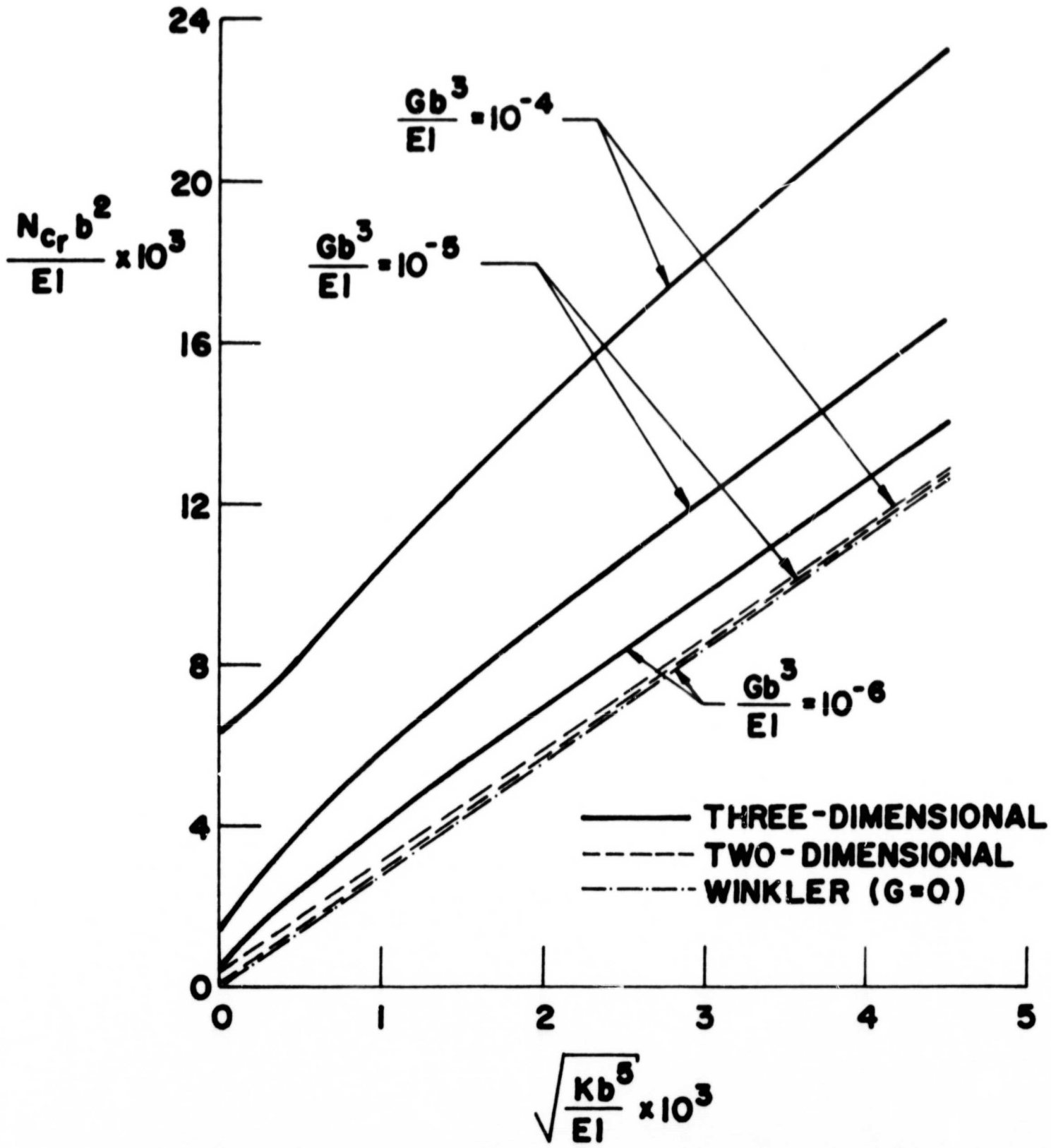

Fig. 5 The effect of extending the foundation beyond the width of the beam

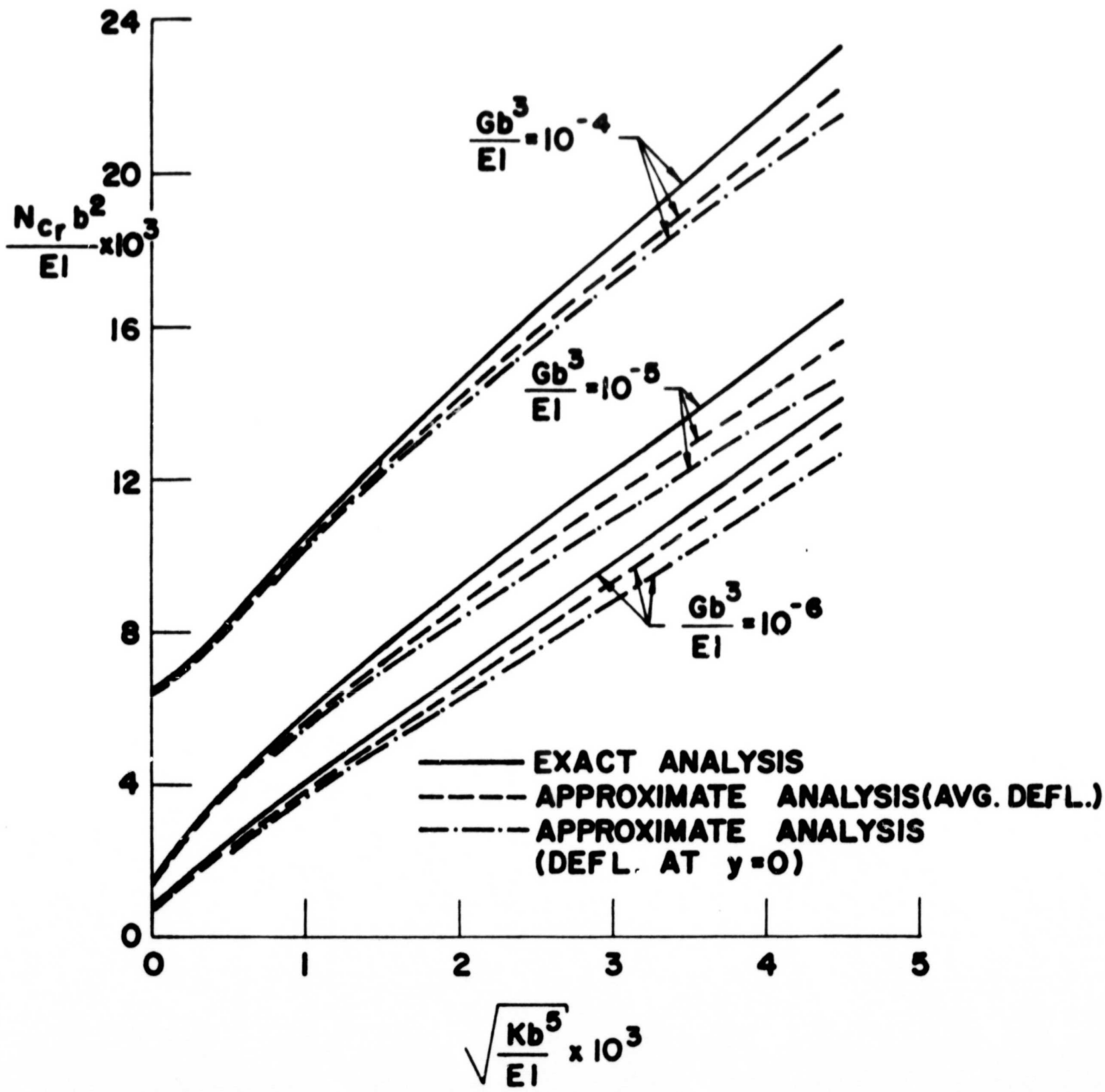

Fig. 6 The comparison of the buckling loads obtained from the exact and approximate analysis (Three-dimensional)

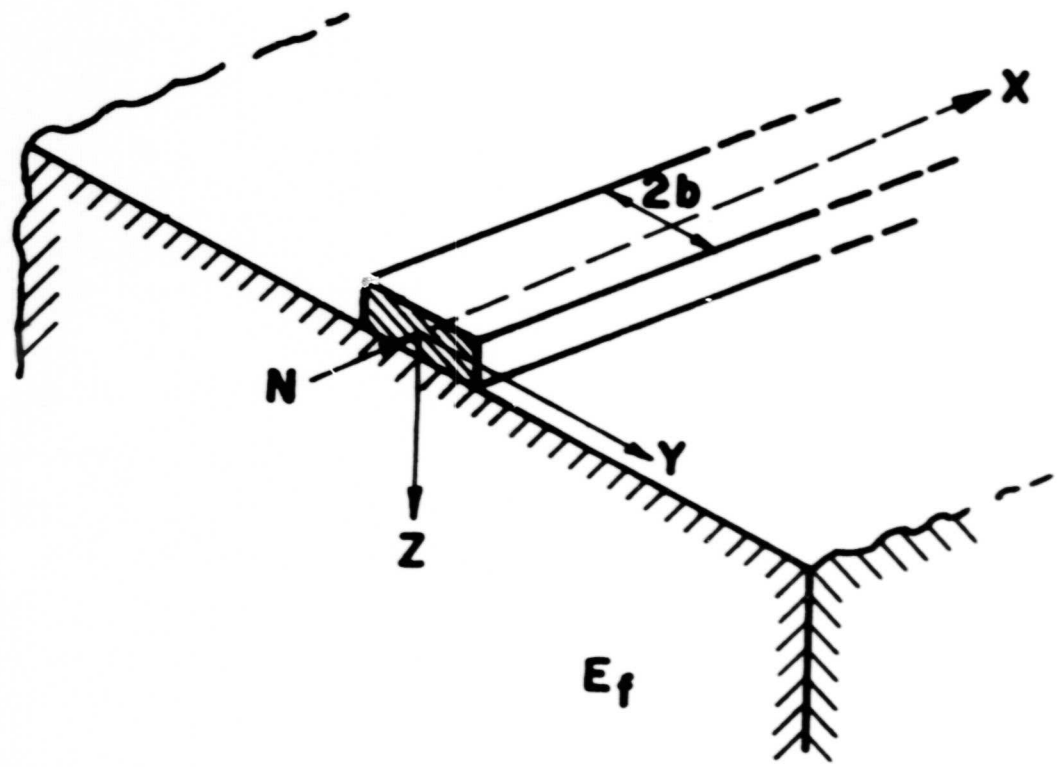

Fig. 8 Beam supported by a semi-infinite elastic-continuum

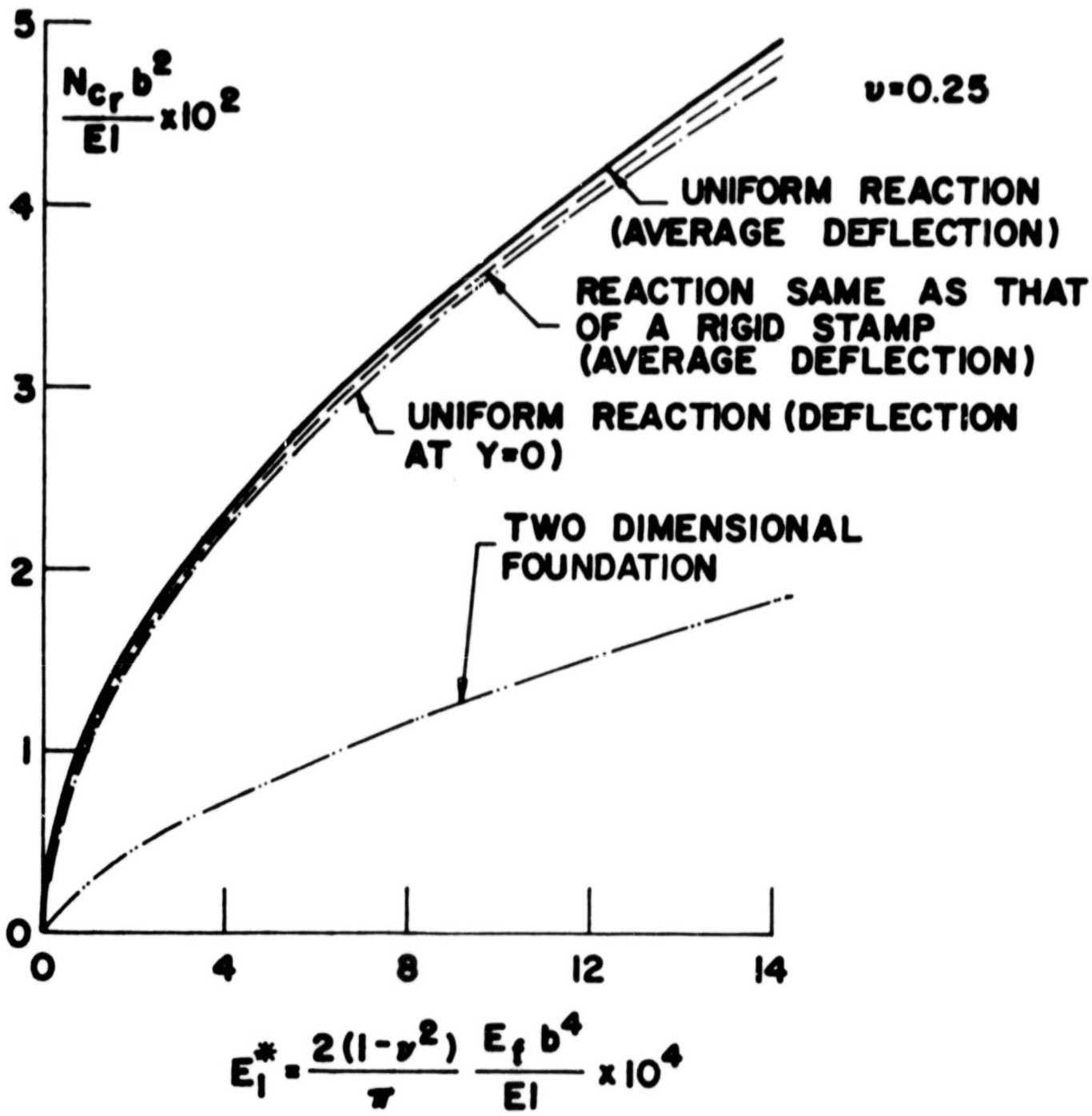

Fig. 9 The effect of extending the elastic continuum beyond the width of the beam and the comparison of various approximations