https://ntrs.nasa.gov/search.jsp?R=19710016892 2018-07-25T00:56:39+00:00Z

N71-26368

NASA CR 118669

NATIONAL AERONAUTICS AND SPACE ADMINISTRATION

Technical Report 32-1531

Structural Design and Stress Analysis Program for Advanced Composite Filament-Wound Axisymmetric Pressure Vessels (COMTANK)

A. C. Knoell

CASE FILE COPY

JET PROPULSION LABORATORY
CALIFORNIA INSTITUTE OF TECHNOLOGY
PASADENA, CALIFORNIA

June 1, 1971

NATIONAL AERONAUTICS AND SPACE ADMINISTRATION

Technical Report 32-1531

Structural Design and Stress Analysis Program for Advanced Composite Filament-Wound Axisymmetric Pressure Vessels (COMTANK)

A. C. Knoell

JET PROPULSION LABORATORY
CALIFORNIA INSTITUTE OF TECHNOLOGY
PASADENA, CALIFORNIA

June 1, 1971

Prepared Under Contract No. NAS 7-100
National Aeronautics and Space Administration

Preface

The work described in this report was performed by the Engineering Mechanics Division of the Jet Propulsion Laboratory.

Acknowledgment

Grateful acknowledgment is made to Mr. R. Matlin of the Engineering Mechanics Division of JPL for his assistance and helpful suggestions in developing COMTANK and to Mrs. T. Chapman of the Computation and Analysis Section for programming COMTANK.

Contents

I. Introduction 1

II. Program Description 1

A. Program Functioning 1

B. Method of Solution 2

1. Vessel design 2

2. Mathematical model 3

3. Stress analysis 4

C. Operating Experience 5

III. Programming 5

A. Input Format 5

1. Comment 5

2. Control 5

3. Tank geometry 6

4. Lamina, liner, boss geometry 7

5. Design loading 7

6. Skirt geometry 7

7. Analysis comment 7

8. Analysis mechanical loading 7

9. Analysis thermal loading 8

10. Additional analyses 8

B. Output Format 8

C. Operational Diagram 9

IV. Sample Problem 9

Appendix. Material Properties 22

References 24

Tables

1. Facsimiles of printout data 10

A-1. Boron/epoxy material properties 22

A-2. Graphite/epoxy material properties 23

A-3. Metal material properties 23

Contents (contd)

Figures

1. Typical cylindrical skirt 3
2. Typical boss flange attachment 3
3. Cylindrical tank coordinate system 4
4. COMTANK operational diagram 9
5. Sample input data 9

Abstract

This report describes a computer program (COMTANK) that enables the user to design and analyze advanced composite filament-wound axisymmetric pressure vessels. Based on user input, the program develops a pressure vessel design using netting analysis theory and then analyzes the design considering the orthotropic construction of the vessel. The analysis consists essentially of determining the stress resultants that exist at a point in the tank wall and then the stresses that exist in each ply of the laminate at that point.

Structural Design and Stress Analysis Program for Advanced Composite Filament-Wound Axisymmetric Pressure Vessels (COMTANK)

I. Introduction

A digital computer program, COMTANK, has been developed at the Jet Propulsion Laboratory to design and analyze advanced composite filament-wound axisymmetric pressure vessels. The purpose of this program is to enable the user to automatically develop a detailed vessel design and perform a complex stress analysis of the design in an efficient and cost-effective manner. In usual practice involving structural design and analysis of filament-wound chambers, engineering personnel first develop an isotensoid (helical-wound) or near-isotensoid (planar-wound) vessel design using netting analysis theory (see Refs. 1–3). This theory assumes that the filaments of the composite material carry all the load and that the matrix material serves only to hold the filaments to the vessel shape. The design procedure is relatively straightforward and, as such, is not a cumbersome engineering task.

After the vessel is designed, it is generally analyzed as a laminated orthotropic shell of revolution in which the stress-carrying ability of the matrix is then considered. In this case, a finite element mathematical model of the chamber is usually developed. The model generally consists of a large number of elements and thus requires a large amount of data generation (particularly geometric and composite material property data) on the part of engineering personnel. As a consequence, the amount of data handling increases, thereby increasing both the time and cost of the analysis and subjecting it to the distinct possibility of human error.

The COMTANK program was developed to reduce the entire tank design and analysis procedure to a completely computer-automated process. Since input preparation for the program is simple, engineering personnel who have had only slight training in computer programming can fully utilize the capabilities of COMTANK. The program has been written in FORTRAN V for the UNIVAC 1108 computer for execution under the EXEC 8 control system.

II. Program Description

A. Program Functioning

The program has been specifically developed to handle planar-wound pressure vessels fabricated of either boron/epoxy or graphite/epoxy advanced composite material. The vessel may or may not contain a

cylindrical midsection; i.e., the tank configuration may be that of a cylinder with dome closures or an oblate spheroid. In the former case, provision has been made to accept unequal boss openings in the forward and aft domes.

In general, input to the program must be provided in three basic categories:

(1) Tank description, consisting of geometry and material property data.

(2) Design loading condition.

(3) Analysis loading conditions.

The tank description consists of a definition of overall tank geometry and component geometry relating to the liner, bosses, and skirt attachments. The design loading condition consists of internal pressure only. The analysis loading conditions consist of internal pressure, boss line loadings, and temperature gradients through the tank wall.

Items (2) and (3) above indicate that it is possible to analyze a pressure vessel design for loading conditions other than those for which it was designed.

Given the proper input, COMTANK will perform computations to provide the user as output a detailed pressure vessel design and stress analysis. The vessel design consists of midsurface coordinates defining the entire tank and skirt-support element geometry, element wall thicknesses throughout the structure, ply construction, enclosed volumes, weight breakdowns, and material property details relating to filament tape wrap angles and coefficients of thermal expansion. The stress analysis consists of the entire displacement field of the structure, element nodal forces, stress resultants and couples, and point stress analysis, giving a detailed breakdown of the longitudinal, transverse, and shear stress in each layer of the composite at the point under consideration.

B. Method of Solution

1. Vessel design. The overall design configuration of the pressure vessel is determined using essentially the netting analysis procedure given in Ref. 1. The main feature of this procedure involves the solution of the differential equation governing the in-plane normalized (with respect to the tank radius) dome headshape. This equation is given as

$$2 - \frac{rz''}{z'\left[1 + (z')^2\right]} = \frac{\left[b - (c - z + rz')\tan\gamma\right]^2}{\left[1 + (z')^2\right]\left\{r^2 - \left[b - (c - z)\tan\gamma\right]^2\right\}} \tag{1}$$

in which r and z represent the normalized dome radius and height, respectively; b = normalized boss opening; c = normalized height of the boss opening; γ = wrap angle; and the primes denote differentiation with respect to the normalized radius.

In the solution process, Eq. (1) is transformed to a system of first- and second-order differential equations to allow for a tenable boundary condition and is solved numerically in the program for the dome coordinates. The logic built into the solution procedure allows the parameter c to incrementally increase to as large a value as possible in relation to $z = z_{\max}$ of the headshape. This results in the headshape tending to approach a minimum weight configuration.

The basic tank wall construction is derived from the solution of simple netting analysis equilibrium equations in the meridional and hoop directions. In this way, the number of planar and hoop wraps are determined. The program logic allows for the development of an even number of planar wraps and any number of hoop wraps.

The ply thickness in the dome regions is developed based on the approach given in Ref. 4. A set of relations for the approximate number of plies at any point in the dome was derived as:

$$N = 2\left[1 - 0.1\left(\frac{R - R_B}{W}\right)\right]\left(\frac{R_T}{W}\right)\cos^{-1}\left(\frac{R_B}{R}\right) \qquad \text{for } R_B \le R \le (R_B + W)$$

$$N = 2\left[0.9 + 0.1\left(\frac{R - R_B - W}{R_T - R_B - W}\right)\right]\left(\frac{R_T}{W}\right)\left[\cos^{-1}\left(\frac{R_B}{R}\right) - \cos^{-1}\left(\frac{R_B + W}{R}\right)\right] \qquad \text{for } (R_B + W) \le R \le R_T \tag{2}$$

where N = number of plies per wrap; R = dome radius; R_B = boss radius of dome; R_T = tank radius; and W = tape width.

Using Eq. (2), the ply thickness is determined in the program from the relation

$$t_p = \left(\frac{t_e}{2}\right) N \tag{3}$$

where t_p = ply thickness in dome; and t_e = thickness of dome at the equator.

2. *Mathematical model.*

a. Geometry. A significant feature of COMTANK is the automatic development of a mathematical model of the design for subsequent stress analysis as a laminated shell of revolution. The procedure employed in developing the model is described below.

For the case of a cylindrical tank with dome closures, a total of 99 elements were allocated for completely describing the tank model including the skirt support structure. Of the total number of elements, a maximum of 37 elements were allocated for the description of each dome closure. The actual number of elements used to describe the domes depends, as will be shown, on the degree of coarseness employed by the user in assigning values to allowable differences in dome height Δz, wrap angle $\Delta\alpha$, and wall thickness Δt between adjacent nodes in the dome. Elements not used in defining the dome shapes are used in describing the cylindrical region.

The number of elements used to define a cylindrical skirt was fixed at eight. As shown in Fig. 1, five of the elements are used to describe the flange attachment to the cylindrical section, and three are used to describe the stem. COMTANK has been programmed to allow for the existence of either a forward or aft skirt or both. The skirt attachment in all cases is as shown in Fig. 1.

The number of elements used to define a forward or aft boss flange attachment (Fig. 2) is derived from a comparison between the inputed total flange length and the sum of the meridional distances between successive dome nodes starting at the boss opening.

If the sum of the meridional node distances equals the inputed flange length, the number of boss flange elements is known, viz., one less than the total number of nodes used in the computation. If the sum is less than the inputed flange length, the summation process

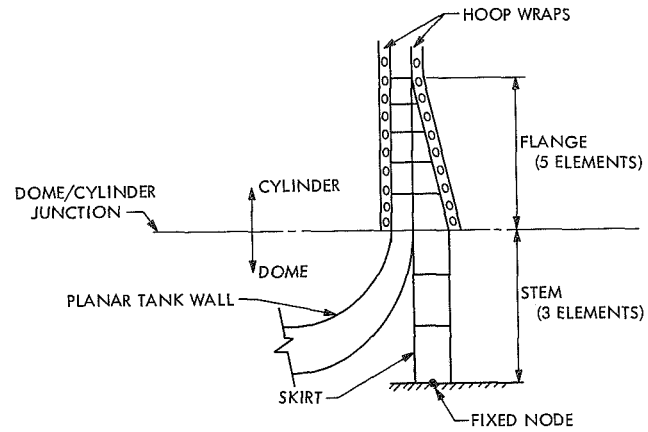

Fig. 1. Typical cylindrical skirt

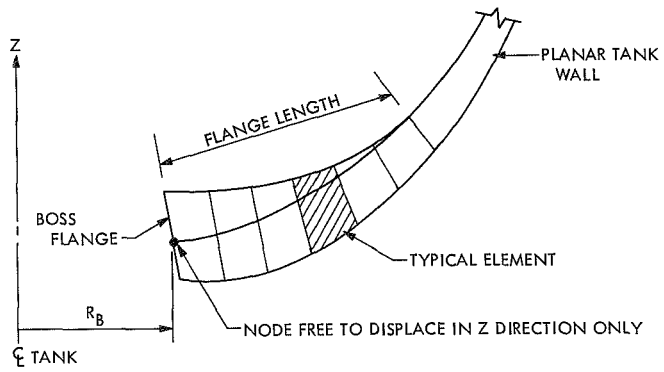

Fig. 2. Typical boss flange attachment

is continued until the sum exceeds the inputed value. When this occurs, the program uses the sum of the node distances up to the preceding node as the new boss flange length. This is done as a matter of convenience, since the dome element construction was already determined and the effect on the analysis of a slightly decreased stiffness representation in the vicinity of the flange tip is negligible.

The node and element numbering sequence for the tank model begins at the forward boss opening and ends at the aft boss opening. The overall tank coordinate system is taken as shown in Fig. 3.

For the case of an oblate spheroid, the mathematical model is developed in essentially the same manner as that of the cylinder with dome closures. The differences in model development for the oblate spheroid are discussed below.

COMTANK has been developed to handle only filament-wound oblate spheroids that are symmetric

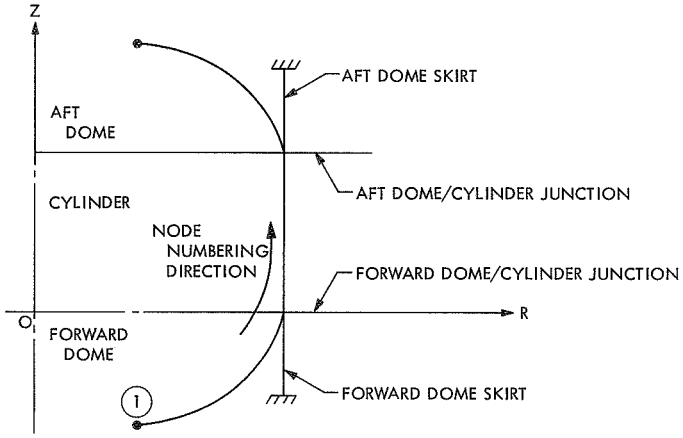

Fig. 3. Cylindrical tank coordinate system

about the equator, i.e., the junction of the forward and aft domes. Thus the forward and aft domes, including the boss structure, are assumed to be identical. As such, the program allows a maximum of only 37 elements for defining the dome closure. The allocation of a total of 99 elements for tank description does not apply.

The program assumes that structural support for the tank is provided through the boss fittings. Thus no provision has been made for cylindrical skirt attachment.

b. Material properties. Each element in the tank model, regardless of the type of vessel, is assigned a set of material properties consistent with its location in the model. On a materials basis, there are five possible types of elements. These elements and their characterization in the program are described below.

Dome elements not including those containing the boss flange attachment are characterized by a single material layer. The properties of this layer are based on the average of the thickness and filament wrap angle of the nodal end points of the element. The wrap angle determines the orthotropic thermoelastic material constants for the laminate layer via a table look-up and linear interpolation scheme. The thickness determines the number of plies of composite material in the laminate. Note that at this point in the program no attention is given to the number of plies comprising the laminate.

Dome elements that contain a segment of the boss flange fitting are composed of two material layers. For the general case where two or more layers are required for an element description, they are always listed in the program in sequential order from the inside to the outside surfaces of the tank. For this case, the first layer represents the segment of the boss flange. Its thickness is determined by averaging the flange thickness of the element nodes. As will be seen, the user must specify only the type of boss material. The properties of the second or composite layer of the element under consideration are derived in the program as described above.

Skirt elements in the stem portion of the skirt (see Fig. 1) are identical and composed of a single material layer. As in the case of the boss flange layer, the type of material must be specified by the user. The thickness for these elements is constant.

Skirt elements in the flange section of the skirt (see Fig. 1) are characterized by four material layers. The layers consist, sequentially, of the inside hoop and planar wraps of the cylinder, the skirt flange, and the outside hoop wraps of the cylinder. The thicknesses of the three composite layers are constant and derived individually in the program. As before, the thermoelastic material properties depend on the wrap angle for the layer under consideration. The thickness of the scarf flange element is derived in the same manner as that of a boss flange element. The flange material is the same as that of the stem section of the skirt.

The last type of element is the cylinder element. This element is characterized by three layers: the inside, planar, and outside wraps of composite material. The thickness and material properties of these layers are determined as described above.

*3. **Stress analysis.*** After the tank model is constructed, COMTANK then performs a global stress analysis of the model using a direct stiffness approach. The analysis is based on the procedure given in Ref. 5. Basically, the procedure consists of developing the stiffness representation of each of the conical frustra associated with the shell elements previously described and satisfying conditions of force equilibrium and deformation compatibility at the nodes. For the loading condition prescribed by the user, the analysis serves to determine the complete displacement field of the tank model, the forces acting at the nodes of each element, and the nodal stress resultants. The latter are of particular importance because they serve to establish the input required for the last phase of the program.

The final phase of the program consists of a detailed point stress analysis of several elements of the tank

model. In the case of a cylinder with dome closures, COMTANK analyzes a maximum of 25 elements of which a maximum of 10 each are located in the forward and aft domes, respectively, and 5 in the cylindrical region. For an oblate spheroid, a maximum of 10 dome elements are analyzed because of symmetry and the absence of any cylindrical region. Since the analysis is a localized point stress analysis, the representative loading for each element (considered here to be a point) is derived from the average of the stress resultants acting at each node of the element.

The analysis is based on the procedure given in Ref. 6. Essentially, the stresses developed in each layer of the laminate are determined from constitutive lamina equations relating stress to strain, where the strain is determined from laminate stress-strain relationships. The results of the analysis provide the user with values for longitudinal, transverse, and shear stress and strain in each layer or lamina of the element under consideration. Whereas the tank analysis considered a composite layer to be representative in elastic properties and thickness of the laminate, the detailed stress analysis considers a composite layer to be the lamina comprising the laminate. A capability to handle up to 100 lamina for a given element has been provided in the program. Thus the user can evaluate stresses and stress distribution within an element to the order of the stress state in each ply.

C. Operating Experience

The program has been used for the design and analysis of boron/epoxy and graphite/epoxy solid-propellant rocket motor cases currently under development at JPL. The rocket motor case configuration is a cylinder with dome closures. With the exception of a shorter-length cylindrical section, the case is similar to the Applications Technology Satellite (ATS) motor described in Ref. 7. No test data are currently available for comparative study.

Running time on the 1108 for a complete design and analysis of a cylinder with dome closures is approximately 43 s. In the case of an oblate spheroid the total running time is approximately 21 s.

After appropriate idealization, input could be written in about 15 min. It was found that performing a few simple shell membrane calculations by hand to estimate design ply construction for a given burst pressure or, conversely, the burst pressure for a given ply construction was a useful aid in reducing the number of runs necessary to finalize a design/analysis study.

III. Programming

A. Input Format

Input to the program is provided in the following blocks:

(1) Comment.

(2) Control.

(3) Tank geometry.

(4) Lamina, liner, boss geometry.

(5) Design loading.

(6) Skirt geometry.

(7) Analysis comment.

(8) Analysis mechanical loading.

(9) Analysis thermal loading.

(10) Additional analyses.

With the exception of alphameric data in the comment and control cards, all input data are written in floating-point numbers. Floating point numbers must be written with a decimal point in accordance with the format statements included below.

1. Comment. The comment data block consists of a single card of alphameric data containing up to 72 characters. This card is basically used to define the problem being solved and to provide a run record for the user.

2. Control. Program operational constraints are defined on the control card in accordance with the following format:

ICYL	ITABLE	IMAT(1)	IMAT(2)	IMAT(3)	IMAT(4)	IMAT(5)	NPB	KHOOP	NHOOP

(10I5)

ICYL = type of problem
0, oblate spheroid
1, cylinder with dome closures

ITABLE = type of tank wall material
0, boron/epoxy ($v_f = 0.50$)
1, graphite/epoxy ($v_f = 0.57$)

IMAT(1) = material for liner

IMAT(2) = material for forward boss flange

IMAT(3) = material for aft boss flange

IMAT(4) = material for forward skirt

IMAT(5) = material for aft skirt

NPB = number of analysis loading conditions

KHOOP = hoop wrap option
0, number of hoop wraps to be computed by COMTANK
1, number of hoop wraps to be inputed by user

NHOOP = number of hoop wraps inputed by user

The material property data for boron/epoxy and graphite/epoxy are stored in the program in tabulated form and are as shown in Tables A-1 and A-2 of the Appendix.

For each of the five material categories described above, i.e., IMAT(1) through (5), the user can select one of six metal candidates provided in the program. The candidate is described by specifying the appropriate integer as follows:

1 = aluminum (6061)

2 = titanium (6A14V)

3 = steel (301)

4 = magnesium (ZK60)

5 = nickel

6 = invar

The metal material properties used in the program are given in Table A-3 of the Appendix.

In the case of an oblate spheroid (ICYL = 0), data need be provided only for IMAT(1) and (2). The program considers IMAT(3) = IMAT(2) due to symmetry. IMAT(4) and (5) do not apply in this case owing to the absence of any skirt support.

As an added degree of flexibility, an option has been provided in the program for the case of a cylinder with dome closures (ICYL = 1) to input directly the number of desired hoop wraps. This is done by specifying the parameter KHOOP = 1. The last entry in the control card (NHOOP) contains the integer number of hoop wraps specified by the user. For the case of an oblate spheroid (ICYL = 0), the last two parameters of the control card may be left blank.

3. Tank geometry. This card contains data on the tank configuration, initial allowable variations in dome parameters between adjacent nodes, and width of tape intended for use in vessel fabrication. The format is as follows:

DT	LT	DF	DA	DELZ	DELA	DTHK	WIDTH

(8E10.0)

DT = diameter of tank

LT = overall tank length

DF = diameter of forward boss opening

DA = diameter of aft boss opening

DELZ = initial maximum height between nodes

DELA = initial maximum angle between nodes

DTHK = initial maximum thickness between nodes

WIDTH = tape width

The overall tank length LT must be provided only for the case of a cylindrical tank with dome closures (ICYL = 1). Otherwise, it may be left blank.

For the case of a cylindrical tank with dome closures, the boss diameters DF and DA must always be provided as they may have the same or different values. For the case of an oblate spheroid (ICYL = 0), only the forward boss diameter DF need be provided due to symmetry of the vessel about the equator.

The parameters DELZ, DELA, and DTHK represent initial limitations imposed by the user on the allowable difference in dome height, wrap angle, and wall thickness, respectively, between adjacent nodes. These parameters represent a user control on the element idealization of the dome structure of a vessel. Large input values will result in a coarse representation of

the dome whereby the resulting number of dome elements is much less than the 37 maximum possible. Conversely, small input values will tend to result in a larger number of dome elements than the maximum possible total of 37. In the event that this condition is encountered, the program automatically increases each value by 10% in consecutive steps until the condition of a maximum of 37 dome elements is satisfied.

4. Lamina, liner, boss geometry. Input format for this data card is as follows:

TLA	TLI	LFBF	TFBFZ	LABF	TABFZ

(6E10.0)

TLA = composite lamina thickness

TLI = liner thickness

LFBF = length of forward boss flange

TFBFZ = thickness of forward boss flange

LABF = length of aft boss flange

TABFZ = thickness of aft boss flange

The boss flange length is as shown in Fig. 2. The flange thickness corresponds to the maximum or throat thickness of the boss. In the case of an oblate spheroid (ICYL = 0), the aft boss flange parameters LABF and TABFZ are left blank.

5. Design loading. This block of data contains information on the tank internal burst pressure loading and the strength and density of the composite material. The format is as follows:

P	SIGMA	RHOLA

(3E10.0)

P = design burst pressure

SIGMA = uniaxial tensile strength of composite lamina

RHOLA = density of composite lamina

6. Skirt geometry. The parameters and format defining the forward and aft skirt geometries are as follows:

LFSTOT	LFSF	TFSF	LASTOT	LASF	TASZ

(6E10.0)

LFSTOT = total length of forward skirt

LFSF = length of forward skirt flange

TFSZ = thickness of forward skirt

LASTOT = total length of aft skirt

LASF = length of aft skirt flange

TASF = thickness of aft skirt

The total skirt length is the sum of the skirt flange and stem lengths as shown in Fig. 1. The skirt thickness is the thickness of the stem portion.

In the case of an oblate spheroid (ICYL = 0), all input parameters for this block of data are blank. Note, however, that a blank card must be provided in the input deck for sequencing purposes.

7. Analysis comment. This card consists of 72 characters of alphameric data. It is intended for use in defining the loading condition for the tank analysis.

8. Analysis mechanical loading. The mechanical loading condition for tank analysis is described in accordance with the following format:

PR	FORCE 1	FORCE 2

(3E10.0)

PR = internal tank pressure

FORCE 1 = axial load at forward boss opening

FORCE 2 = axial load at aft boss opening

The internal pressure loading is taken positive when acting from the inside to the outside of the vessel wall. The axial loads, FORCE 1 and FORCE 2, are forward and aft boss ring loads applied, in the case of a cylinder with dome closures, at nodes 1 and 100, respectively, as shown in Fig. 3. They are, in essence, the reaction forces derived from assumed bulkhead coverings of the boss openings. They are taken positive in the direction of the Z axis (Fig. 3).

For the case of an oblate spheroid, FORCE 1 and FORCE 2 have the same value but are of opposite sign.

9. ***Analysis thermal loading.*** This card contains thermal loading data for the tank analysis. The format is as follows:

THERM(1)	THERM(2)	THERM(3)	THERM(4)	THERM(5)	THERM(6)	THERM(7)	THERM(8)

(8E10.0)

THERM(1) = temperature at inner surface of forward boss opening

THERM(2) = temperature at composite/metal interface of forward boss opening

THERM(3) = temperature at outer surface of forward boss opening

THERM(4) = temperature at inner surface of aft boss opening

THERM(5) = temperature at composite/metal interface of aft boss opening

THERM(6) = temperature at outer surface of aft boss opening

THERM(7) = temperature at inner surface of cylinder

THERM(8) = temperature at outer surface of cylinder

THERM(1), (2), (3) and THERM(4), (5), (6) represent the thermal gradients through the thickness at the forward and aft boss openings, respectively. THERM(7) and (8) represent the thermal gradient through the vessel wall in the cylindrical region. This gradient is taken as constant throughout the cylindrical region. In the case of an oblate spheroid (ICYL = 0), THERM(7) and (8) are applied at the equator.

In the dome regions of the tank, a piecewise linear meridional variation in temperature is taken by the program for the inside and outside wall temperatures between the boss opening and the dome/cylinder junction (or the equator for an oblate spheroid). The composite/metal interface temperature in the boss region varies piecewise linearly from the input boss opening temperature to the same temperature as that of the inside surface of the tank at the tip of the flange.

For the case of no temperature loading, a blank card must be provided in the input deck for sequencing purposes.

10. ***Additional analyses.*** Additional analyses can be performed by COMTANK in accordance with the value of NPB on card 2 of the input data. Each analysis case consists of cards 7, 8, and 9, which must be stacked sequentially at the end of the input deck.

B. Output Format

An example of the output format is given in the example problem in the following section. The format is divided into the following basic blocks:

(1) Input design data.

(2) Design configuration.

(3) Input analysis data.

(4) Model configuration.

(5) Loading condition.

(6) Displacement field.

(7) Nodal forces.

(8) Stress resultants.

(9) Element stress analysis.

C. Operational Diagram

The operational diagram for COMTANK is shown in Fig. 4.

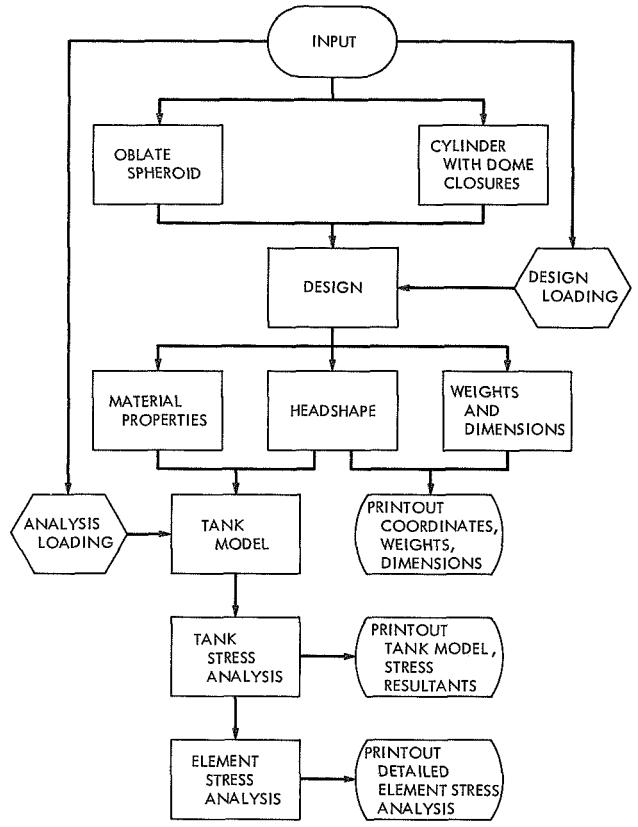

Fig. 4. COMTANK operational diagram

IV. Sample Problem

As a matter of convenience, a sample problem was run on an oblate spheroid to illustrate the input and output data of COMTANK. The input data format for the sample problem is shown in Fig. 5.

Facsimiles of printout data are presented in Table 1. It should be noted that detailed stress analysis data for elements 3, 7, 8, 9, 10, 11, 12, and 13 were developed by COMTANK. Since the output format for each element is similar, only the data for element 13 are shown.

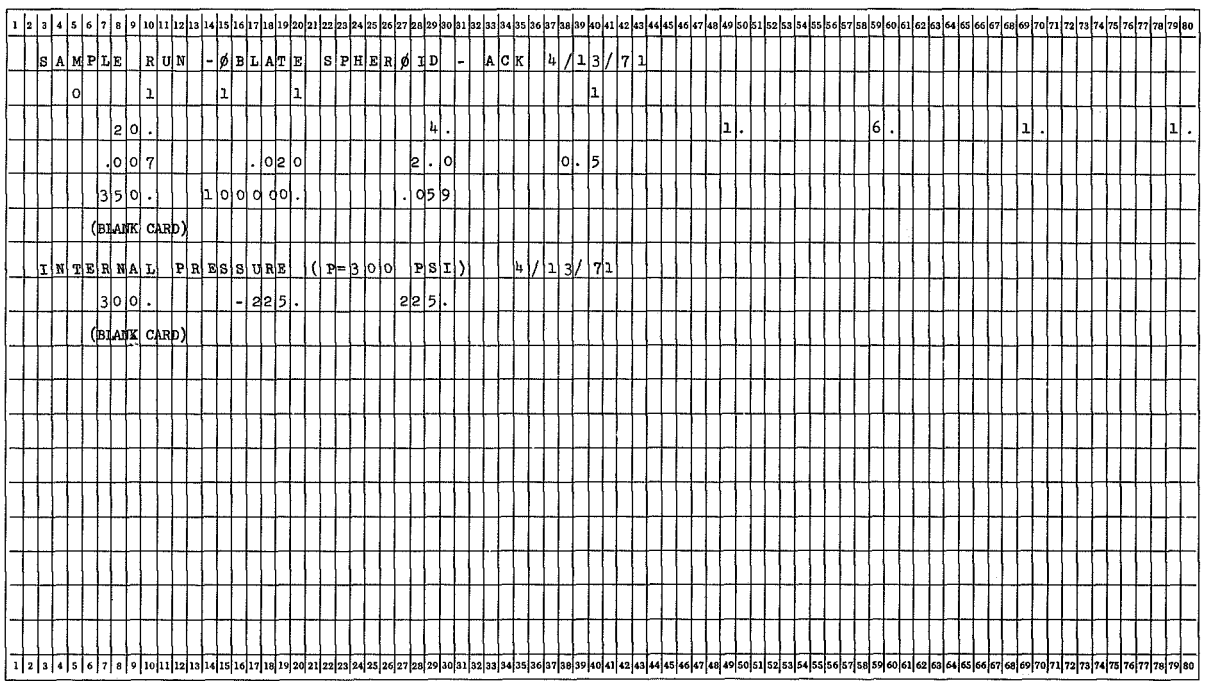

Fig. 5. Sample input data

Table 1. Facsimiles of printout data

PLANAR WOUND PRESSURE VESSEL DESIGN

SAMPLE RUN - OBLATE SPHEROID - ACK 4/13/71

INPUT PARAMETERS

TANK DIAMETER, IN.	20.00
TANK LENGTH, IN.	12.58
FORWARD BOSS -	
DIAMETER, IN.	4.00
FLANGE LENGTH	2.00
FLANGE THROAT THICKNESS	.50
AFT BOSS -	
DIAMETER, IN.	4.00
FLANGE LENGTH	.00
FLANGE THROAT THICKNESS	.00
DESIGN BURST PRESSURE, PSI	350.
LINER THICKNESS, IN.	.0200
FWD SKIRT -	
LENGTH	.00
FLANGE LENGTH	.00
THICKNESS	.00
AFT SKIRT -	
LENGTH	.00
FLANGE LENGTH	.00
THICKNESS	.00

LAMINA UNIAXIAL TENS. STRENGTH, PSI	100000.
LAMINA THICKNESS, IN.	.0070
LAMINA DENSITY, LB/IN**3	.0590
METALS -	
LINER	
MATERIAL	ALUMINUM
DENSITY	.1000
FWD BOSS	
MATERIAL	ALUMINUM
DENSITY	.1000
AFT BOSS	
MATERIAL	ALUMINUM
DENSITY	.1000
FWD SKIRT	
MATERIAL	
DENSITY	.0000
AFT SKIRT	
MATERIAL	
DENSITY	.0000

DESIGN CONFIGURATION

DOME (OBLATE SPHEROID)

MATERIAL: GRAPHITE-EPOXY (50 PERCENT VOLUME FRACTION)

NO.	DOME COORD. RAD(IN)	DOME COORD. HT(IN)	FIL.TENS. RATIO	TENS. (LB/IN) MER	TENS. (LB/IN) HOOP	WRAP ANG. DEG.	MODULUS DATA (PSI) E(M)	E(H)	E(H)/E(M)	G(MH)	POIS. RATIO	ALPHA (IN/IN) MER.	ALPHA (IN/IN) HOOP	THK. (IN)	NO. PLIES
1	10.000	.000	1.000	175.	18.	17.66	.149+08	.000	.157	.228+07	.825+00	-.159-05	.214-04	.029	4
2	10.000	.006	1.000	175.	18.	17.66	.149+08	.000	.157	.228+07	.825+00	-.159-05	.214-04	.029	4
3	10.000	.012	1.000	175.	18.	17.66	.149+08	.000	.157	.228+07	.825+00	-.159-05	.214-04	.029	4
4	10.000	.025	1.000	175.	18.	17.66	.149+08	.000	.157	.228+07	.825+00	-.159-05	.214-04	.029	4
5	10.000	.037	1.000	175.	18.	17.66	.149+08	.000	.157	.228+07	.825+00	-.159-05	.214-04	.029	4
6	10.000	.050	1.000	175.	18.	17.66	.149+08	.000	.157	.228+07	.825+00	-.159-05	.214-04	.029	4
7	9.999	.075	1.000	175.	18.	17.66	.149+08	.000	.157	.228+07	.825+00	-.159-05	.214-04	.029	4
8	9.999	.100	1.000	175.	18.	17.66	.149+08	.000	.157	.228+07	.825+00	-.159-05	.214-04	.029	4
9	9.998	.150	1.000	175.	18.	17.66	.149+08	.000	.157	.228+07	.825+00	-.159-05	.214-04	.029	4
10	9.996	.200	1.000	175.	18.	17.66	.149+08	.000	.157	.228+07	.825+00	-.159-05	.214-04	.029	4
11	9.991	.300	1.000	175.	18.	17.66	.149+08	.000	.157	.228+07	.825+00	-.159-05	.214-04	.029	4
12	9.985	.400	1.000	175.	18.	17.67	.149+08	.000	.157	.228+07	.825+00	-.159-05	.214-04	.029	4
13	9.976	.499	1.000	175.	18.	17.67	.148+08	.000	.157	.228+07	.825+00	-.159-05	.214-04	.029	4
14	9.966	.599	1.000	176.	18.	17.67	.148+08	.000	.157	.228+07	.825+00	-.159-05	.214-04	.029	4
15	9.939	.797	.999	176.	18.	17.68	.148+08	.000	.157	.228+07	.825+00	-.159-05	.214-04	.029	4
16	9.905	.994	.999	176.	18.	17.69	.148+08	.000	.157	.228+07	.826+00	-.159-05	.214-04	.029	4
17	9.864	1.190	.999	177.	18.	17.70	.148+08	.000	.157	.228+07	.826+00	-.159-05	.214-04	.029	4
18	9.760	1.576	.998	179.	18.	17.73	.148+08	.000	.158	.229+07	.828+00	-.160-05	.214-04	.030	4
19	9.627	1.953	.997	181.	19.	17.77	.148+08	.000	.158	.229+07	.830+00	-.161-05	.214-04	.030	4
20	9.467	2.319	.995	184.	19.	17.83	.148+08	.000	.158	.230+07	.833+00	-.162-05	.214-04	.030	4

Table 1 (contd)

21	9.281	2.673	.994	187.	20.	17.91	.147+08	.000	.158	.231+07	.837+00	-.163-05	.214-04	.031	4
22	9.070	3.013	.992	191.	20.	18.02	.147+08	.000	.159	.233+07	.842+00	-.165-05	.214-04	.032	6
23	8.836	3.338	.990	196.	21.	18.15	.146+08	.000	.159	.235+07	.848+00	-.167-05	.213-04	.033	6
24	8.581	3.646	.988	201.	22.	18.32	.145+08	.000	.160	.237+07	.856+00	-.170-05	.213-04	.033	6
25	8.306	3.936	.985	207.	23.	18.52	.144+08	.000	.161	.240+07	.866+00	-.174-05	.213-04	.035	6
26	8.013	4.208	.983	213.	25.	18.78	.142+08	.000	.162	.244+07	.878+00	-.178-05	.213-04	.036	6
27	7.704	4.462	.980	221.	26.	19.11	.141+08	.000	.164	.249+07	.894+00	-.184-05	.212-04	.037	6
28	7.380	4.697	.977	229.	29.	19.50	.139+08	.000	.166	.255+07	.913+00	-.191-05	.212-04	.039	6
29	7.043	4.913	.974	239.	32.	19.98	.136+08	.000	.168	.262+07	.936+00	-.199-05	.211-04	.041	6
30	6.695	5.110	.971	249.	35.	20.57	.132+08	.000	.173	.271+07	.956+00	-.211-05	.209-04	.043	6
31	6.338	5.289	.968	261.	40.	21.29	.128+08	.000	.179	.282+07	.981+00	-.224-05	.208-04	.046	8
32	5.971	5.448	.965	275.	46.	22.16	.122+08	.000	.186	.296+07	.101+01	-.241-05	.205-04	.049	8
33	5.598	5.593	.962	290.	53.	23.23	.116+08	.000	.195	.312+07	.105+01	-.261-05	.203-04	.053	8
34	5.219	5.720	.958	307.	64.	24.54	.107+08	.000	.206	.333+07	.109+01	-.286-05	.199-04	.057	8
35	4.835	5.831	.955	325.	79.	26.16	.975+07	.000	.228	.357+07	.111+01	-.311-05	.193-04	.063	10
36	4.447	5.928	.951	346.	99.	28.19	.854+07	.000	.259	.387+07	.111+01	-.339-05	.184-04	.071	10
37	4.055	6.012	.947	369.	130.	30.75	.711+07	.000	.306	.422+07	.111+01	-.361-05	.170-04	.081	12
38	3.662	6.083	.943	392.	179.	34.07	.556+07	.000	.393	.462+07	.109+01	-.344-05	.145-04	.097	14
39	3.464	6.114	.941	403.	214.	36.11	.478+07	.000	.466	.482+07	.106+01	-.293-05	.127-04	.110	16
40	3.266	6.143	.939	413.	261.	38.50	.405+07	.000	.572	.500+07	.987+00	-.193-05	.102-04	.128	18
41	3.068	6.170	.936	421.	326.	41.33	.335+07	.000	.735	.515+07	.898+00	-.135-06	.720-05	.164	24
42	2.870	6.194	.934	424.	417.	44.75	.275+07	.000	.982	.525+07	.779+00	.285-05	.335-05	.204	30
43	2.770	6.206	.933	424.	479.	46.74	.256+07	.000	1.198	.521+07	.712+00	.503-05	.154-05	.197	28
44	2.671	6.217	.931	420.	556.	48.98	.237+07	.000	1.452	.515+07	.636+00	.756-05	-.411-06	.189	28
45	2.572	6.228	.930	413.	654.	51.53	.224+07	.000	1.820	.500+07	.557+00	.103-04	-.194-05	.179	26
46	2.472	6.239	.928	401.	785.	54.45	.216+07	.000	2.307	.477+07	.471+00	.133-04	-.317-05	.168	24
47	2.463	6.240	.928	400.	799.	54.74	.215+07	.000	2.354	.475+07	.462+00	.136-04	-.329-05	.166	24
48	2.417	6.245	.927	392.	784.	56.18	.214+07	.000	2.656	.459+07	.426+00	.147-04	-.346-05	.160	24
49	2.371	6.250	.933	385.	769.	57.85	.214+07	.000	3.024	.439+07	.384+00	.160-04	-.354-05	.153	22
50	2.324	6.255	.945	377.	754.	59.68	.213+07	.000	3.426	.417+07	.339+00	.173-04	-.362-05	.145	22
51	2.278	6.260	.966	370.	739.	61.69	.216+07	.000	3.922	.388+07	.298+00	.183-04	-.341-05	.136	20
52	2.232	6.265	1.001	362.	724.	63.93	.218+07	.000	4.487	.356+07	.254+00	.193-04	-.310-05	.126	18
53	2.185	6.270	1.057	354.	709.	66.48	.222+07	.000	5.111	.317+07	.211+00	.202-04	-.267-05	.114	16
54	2.139	6.275	1.151	347.	694.	69.45	.227+07	.000	5.824	.271+07	.166+00	.209-04	-.210-05	.100	14
55	2.093	6.280	1.328	339.	679.	73.07	.233+07	.000	6.532	.217+07	.123+00	.215-04	-.146-05	.083	12
56	2.046	6.285	1.767	332.	664.	77.92	.240+07	.000	7.247	.154+07	.787-01	.220-04	-.728-06	.059	8
57	2.000	6.290		324.	649.	90.00	.248+07	.000	7.908	.765+06	.328-01	.223-04	.928-07	.000	0

NORMALIZED DOME HEIGHT = .625
ACTUAL DOME HEIGHT = 6.290

CHARACTERISTICS

	EACH DOME	TOTAL
VOLUME, CUBIC INCHES	1422.86	2845.72
F.W. SURFACE AREA, SQ. IN.	489.36	978.72
F.W. MERIDIONAL LENGTH, IN.	11.27	22.55
F.W. THICKNESS	.028C	
NUMBER OF PLANAR PLIES	4	
WALL WEIGHT, LBS.	1.17	2.34
LINER WEIGHT, LBS.	.98	1.96
BOSS WEIGHT (ESTIMATED), LBS.	.84	1.68
TOTAL WEIGHT, LBS.		5.97

Table 1 (contd)

DZ = 1.000
DA = 6.000
DT = 1.000

AVERAGE PROPERTIES ---

MATERIAL: GRAPHITE-EPOXY (50 PERCENT VOLUME FRACTION)

ELEM. NO.	NODE HEIGHT FWD	AFT	MODULUS DATA (PSI) E(M)	E(H)	E(H)/E(M)	G(MH)	POIS. RATIO	ALPHA (IN/IN) MER.	HOOP	THK. (IN)	NO. PLIES
1	17	1	.148+08	.000	.157	.228+07	.825+00	-.159-05	.214-04	.029	6
2	20	17	.148+08	.000	.158	.229+07	.830+00	-.160-05	.214-04	.030	6
3	23	20	.147+08	.000	.159	.233+07	.840+00	-.164-05	.214-04	.031	6
4	27	23	.143+08	.000	.162	.242+07	.871+00	-.176-05	.213-04	.035	6
5	33	27	.129+08	.000	.178	.280+07	.977+00	-.222-05	.208-04	.045	8
6	37	33	.325+07	.000	.240	.369+07	.111+01	-.323-05	.189-04	.067	10
7	40	37	.530+07	.000	.407	.468+07	.109+01	-.342-05	.141-04	.105	16
8	42	40	.330+07	.000	.756	.516+07	.887+00	.121-06	.687-05	.166	24
9	45	42	.245+07	.000	1.356	.517+07	.665+00	.661-05	.328-06	.192	28
10	49	45	.215+07	.000	2.346	.475+07	.464+00	.135-04	-.327-05	.166	24
11	52	49	.215+07	.000	3.721	.400+07	.314+00	.179-04	-.352-05	.139	20
12	55	52	.226+07	.000	5.596	.285+07	.180+00	.207-04	-.228-05	.104	16
13	57	55	.244+07	.000	7.596	.117+07	.558-01	.222-04	-.326-06	.041	6

LOADING - NUMBER OF PROBLEMS = 1

PROBLEM NO. 1 INTERNAL PRESSURE (P=300 PSI) 4/13/71

INTERNAL PRESSURE = 300.00
AXIAL FORCE AT FWD DOME OPENING = -225.00
AXIAL FORCE AT AFT DOME OPENING = 225.00

DISPLACEMENT BOUNDARY CONDITIONS

LOCATION	RADIAL	AXIAL	MERIDIONAL ROTATION
FWD DOME OPENING			FIXED
AFT DOME OPENING			FIXED
FWD SKIRT END	FIXED	FIXED	FIXED
AFT SKIRT END	FIXED	FIXED	FIXED

LNO. ELT(I) 8 3 7 8 9 10 11 12 13

Table 1 (contd)

SAMPLE RUN - OBLATE SPHEROID - ACK 4/13/71

NUMBER OF NODAL CIRCLES.... 27

NUMBER OF ELEMENTS..... 26

NUMBER OF MATERIALS..... 19

NUMBER OF PROBLEMS..... 1

MATERIAL PROPERTIES OF THE INDIVIDUAL LAYERS

MAT.	E-MERID	K=E(H)/E(M)	POIS-RATIO	SHEAR MOD.	THICKNESS	ALPHA-M	ALPHA-H	DENSITY
1	.2441+07	7.60	.056	.1171+07	.041	.2219-04	-.3255-06	.0000
2	.2256+07	5.60	.180	.2854+07	.104	.2070-04	-.2285-05	.0000
3	.2145+07	3.72	.314	.4001+07	.139	.1794-04	-.3517-05	.0000
4	.2148+07	2.35	.464	.4753+07	.166	.1353-04	-.3269-05	.0000
5	.2446+07	1.36	.665	.5169+07	.192	.6605-05	.3277-06	.0000
6	.3301+07	.76	.887	.5163+07	.166	.1211-06	.6872-05	.0000
7	.5303+07	.41	1.091	.4684+07	.105	-.3415-05	.1413-04	.0000
8	.9255+07	.24	1.111	.3691+07	.067	-.3227-05	.1890-04	.0000
9	.1285+08	.18	.977	.2802+07	.045	-.2220-05	.2079-04	.0000
10	.1433+08	.16	.871	.2419+07	.035	-.1755-05	.2128-04	.0000
11	.1467+08	.16	.840	.2326+07	.031	-.1644-05	.2137-04	.0000
12	.1480+08	.16	.830	.2293+07	.030	-.1604-05	.2140-04	.0000
13	.1484+08	.16	.825	.2280+07	.029	-.1589-05	.2141-04	.0000
14	.9900+07	1.00	.300	.3800+07	.482	.1300-04	.1300-04	.0000
15	.9900+07	1.00	.300	.3800+07	.436	.1300-04	.1300-04	.0000
16	.9900+07	1.00	.300	.3800+07	.381	.1300-04	.1300-04	.0000
17	.9900+07	1.00	.300	.3800+07	.314	.1300-04	.1300-04	.0000
18	.9900+07	1.00	.300	.3800+07	.216	.1300-04	.1300-04	.0000
19	.9900+07	1.00	.300	.3800+07	.078	.1300-04	.1300-04	.0000

Table 1 (contd)

COORDINATES OF NODAL CIRCLES

NODE	R-COORDINATE	Z-COORDINATE
1	2.000	-6.230
2	2.093	-6.280
3	2.232	-6.265
4	2.371	-6.250
5	2.572	-6.228
6	2.870	-6.194
7	3.266	-6.143
8	4.055	-6.012
9	5.598	-5.593
10	7.704	-4.462
11	8.836	-3.338
12	9.467	-2.319
13	9.864	-1.190
14	10.000	.000
15	9.864	1.190
16	9.467	2.319
17	8.836	3.338
18	7.704	4.462
19	5.598	5.593
20	4.055	6.012
21	3.266	6.143
22	2.870	6.194
23	2.572	6.228
24	2.371	6.250
25	2.232	6.265
26	2.093	6.280
27	2.000	6.230

ELEM. NO.	FORW. NODE	BACK NODE	NO. OF LAYERS	MATERIAL PROPERTIES OF LAYERS 1ST	2ND	3RD	4TH	5TH	6TH	7TH	8TH	REF. SURF. CODE	REF. SURF. DISTANCE
1	2	1	2	14	1	0	0	0	0	0	0	0	.000
2	3	2	2	15	2	0	0	0	0	0	0	0	.000
3	4	3	2	16	3	0	0	0	0	0	0	0	.000
4	5	4	2	17	4	0	0	0	0	0	0	0	.000
5	6	5	2	18	5	0	0	0	0	0	0	0	.000
6	7	6	2	19	6	0	0	0	0	0	0	0	.000
7	8	7	1	7	0	0	0	0	0	0	0	0	.000
8	9	8	1	8	0	0	0	0	0	0	0	0	.000
9	10	9	1	9	0	0	0	0	0	0	0	0	.000
10	11	10	1	10	0	0	0	0	0	0	0	0	.000
11	12	11	1	11	0	0	0	0	0	0	0	0	.000
12	13	12	1	12	0	0	0	0	0	0	0	0	.000
13	14	13	1	13	0	0	0	0	0	0	0	0	.000
14	15	14	1	13	0	0	0	0	0	0	0	0	.000
15	16	15	1	12	0	0	0	0	0	0	0	0	.000
16	17	16	1	11	0	0	0	0	0	0	0	0	.000
17	18	17	1	10	0	0	0	0	0	0	0	0	.000
18	19	18	1	9	0	0	0	0	0	0	0	0	.000
19	20	19	1	8	0	0	0	0	0	0	0	0	.000
20	21	20	1	7	0	0	0	0	0	0	0	0	.000
21	22	21	2	19	6	0	0	0	0	0	0	0	.000
22	23	22	2	18	5	0	0	0	0	0	0	0	.000
23	24	23	2	17	4	0	0	0	0	0	0	0	.000
24	25	24	2	16	3	0	0	0	0	0	0	0	.000
25	26	25	2	15	2	0	0	0	0	0	0	0	.000
26	27	26	2	14	1	0	0	0	0	0	0	0	.000

Table 1 (contd)

INTERNAL PRESSURE (P=300 PSI) 4/13/71

NUMBER OF TERMS = 1

NUMBER OF PRINT POSITION = 1

MODE NO. 0

PRESSURIZATION AND SURFACE SHEAR LOADING CONDITIONS

ELEMENT NO.	NORMAL PRESSURE (PSI)		MERIDIONAL SHEAR (PSI)		CIRCUMFERENTIAL SHEAR (PSI)	
	FORWARD END	BACK END	FORWARD END	BACK END	FORWARD END	BACK END
1	300.00	300.00	.00	.00	.00	.00
2	300.00	300.00	.00	.00	.00	.00
3	300.00	300.00	.00	.00	.00	.00
4	300.00	300.00	.00	.00	.00	.00
5	300.00	300.00	.00	.00	.00	.00
6	300.00	300.00	.00	.00	.00	.00
7	300.00	300.00	.00	.00	.00	.00
8	300.00	300.00	.00	.00	.00	.00
9	300.00	300.00	.00	.00	.00	.00
10	300.00	300.00	.00	.00	.00	.00
11	300.00	300.00	.00	.00	.00	.00
12	300.00	300.00	.00	.00	.00	.00
13	300.00	300.00	.00	.00	.00	.00
14	300.00	300.00	.00	.00	.00	.00
15	300.00	300.00	.00	.00	.00	.00
16	300.00	300.00	.00	.00	.00	.00
17	300.00	300.00	.00	.00	.00	.00
18	300.00	300.00	.00	.00	.00	.00
19	300.00	300.00	.00	.00	.00	.00
20	300.00	300.00	.00	.00	.00	.00
21	300.00	300.00	.00	.00	.00	.00
22	300.00	300.00	.00	.00	.00	.00
23	300.00	300.00	.00	.00	.00	.00
24	300.00	300.00	.00	.00	.00	.00
25	300.00	300.00	.00	.00	.00	.00
26	300.00	300.00	.00	.00	.00	.00

NODAL CIRCLE FORCES AND MOMENTS

NODAL CIRCLE NO.	RADIAL FORCE (LB/IN)	CIRCUMFERENTIAL FORCE (LB/IN)	AXIAL FORCE (LB/IN)	MOMENT (IN-LB/IN)
1	.000	.000	-225.000	.000
27	.000	.000	225.000	.000

DISPLACEMENT BOUNDARY CONDITIONS

NODAL CIRCLE	RADIAL DISPL. (IN)	CIRCUM. DISPL. (IN)	AXIAL DISPL. (IN)	ROTATION
1	.000			.000
27	.000			.000

Table 1 (contd)

THETA = .0 DEG.

DISPLACEMENTS

NODAL CIRCLE	RADIAL DISPLACEMENT	TANGENTIAL DISPLACEMENT	AXIAL DISPLACEMENT	MERIDIONAL ROTATION
1	.0000000	.0000000	-.0521014	.0000000
2	.0000640	.0000000	-.0520970	-.0000513
3	.0001639	.0000000	-.0520901	.0000003
4	.0002686	.0000000	-.0520705	.0001214
5	.0004259	.0000000	-.0520066	.0003481
6	.0006665	.0000000	-.0518360	.0006116
7	.0011447	.0000000	-.0515402	.0005503
8	.0038004	.0000000	-.0556258	-.0144370
9	.0224900	.0000000	-.1105492	-.1199871
10	-.0062945	.0000000	-.0463486	.1492403
11	-.0151289	.0000000	-.0296941	.0564839
12	-.0102685	.0000000	-.0279734	-.0220561
13	-.0008082	.0000000	-.0273470	-.0018136
14	-.0015099	.0000000	-.0235563	-.0000001
15	-.0008080	.0000000	-.0197656	.0018135
16	-.0102681	.0000000	-.0191392	.0220561
17	-.0151286	.0000000	-.0174185	-.0564838
18	-.0062941	.0000000	-.0007641	-.1492402
19	.0224904	.0000000	.0634365	.1199874
20	.0038005	.0000000	.0085121	.0144377
21	.0011447	.0000000	.0044260	-.0005498
22	.0006665	.0000000	.0047216	-.0006111
23	.0004259	.0000000	.0048920	-.0003476
24	.0002686	.0000000	.0049559	-.0001210
25	.0001638	.0000000	.0049754	.0000001
26	.0000640	.0000000	.0049822	.0000515
27	.0000000	.0000000	.0049866	.0000000

Table 1 (contd)

THETA = .0 DEG.

NODAL CIRCLE FORCES

ELEM NO.	BACK EDGE RADIAL FORCE	BACK EDGE SHEAR FORCE	BACK EDGE AXIAL FORCE	BACK EDGE MERID. MOMENT	FORWARD EDGE RADIAL FORCE	FORWARD EDGE SHEAR FORCE	FORWARD EDGE AXIAL FORCE	FORWARD EDGE MERID. MOMENT
1	-3802.680	.000	-224.609	128.828	3685.680	.000	241.421	-109.041
2	-3685.543	.000	-241.986	109.027	3548.943	.000	267.238	-83.122
3	-3548.920	.000	-267.577	83.257	3450.641	.000	292.379	-61.550
4	-3450.548	.000	-292.261	61.584	3349.197	.000	327.325	-39.283
5	-3349.134	.000	-327.324	39.283	3236.097	.000	378.101	-23.141
6	-3236.098	.000	-378.083	23.144	3078.105	.000	443.951	-21.288
7	-3078.105	.000	-443.954	21.288	2728.041	.000	571.261	-40.848
8	-2728.041	.000	-571.261	40.848	2139.796	.000	812.871	-105.211
9	-2139.796	.000	-812.871	105.211	1533.374	.000	1136.074	-91.137
10	-1533.374	.000	-1136.074	91.137	1031.788	.000	1308.423	-43.655
11	-1031.788	.000	-1308.423	43.655	675.105	.000	1404.147	-32.947
12	-675.105	.000	-1404.147	32.947	336.786	.000	1464.390	-33.419
13	-336.786	.000	-1464.390	33.419	.000	.000	1484.972	-33.715
14	.000	.000	-1484.971	33.715	-336.786	.000	1464.390	-33.419
15	336.786	.000	-1464.390	33.419	-675.105	.000	1404.147	-32.947
16	675.105	.000	-1404.146	32.947	-1031.787	.000	1308.422	-43.655
17	1031.788	.000	-1308.422	43.655	-1533.372	.000	1136.073	-91.136
18	1533.372	.000	-1136.073	91.136	-2139.791	.000	812.869	-105.211
19	2139.791	.000	-812.869	105.211	-2728.032	.000	571.258	-40.848
20	2728.032	.000	-571.258	40.848	-3078.094	.000	443.951	-21.289
21	3078.094	.000	-443.950	21.289	-3236.085	.000	378.083	-23.145
22	3236.085	.000	-378.083	23.144	-3349.120	.000	327.301	-39.288
23	3349.119	.000	-327.322	39.286	-3450.470	.000	292.239	-61.594
24	3450.471	.000	-292.259	61.589	-3548.753	.000	267.450	-83.304
25	3548.761	.000	-267.485	83.293	-3685.359	.000	242.159	-109.200
26	3685.361	.000	-242.212	109.212	-3802.547	.000	225.000	-129.033

Table 1 (contd)

THETA = .0 DEG.

STRESS RESULTANTS AND STRESS COUPLES

ELEMENT NO.		N(S)	N(THETA)	N(S-THETA)	M(S)	M(THETA)	M(S-THETA)	Q(S)
1								
	BACK EDGE	3804.718	1096.802	.000	128.828	6.640	.000	186.952
	FORWARD EDGE	3690.213	1287.365	.000	109.041	6.246	.000	157.616
2								
	BACK EDGE	3690.138	1424.246	.000	109.027	-10.649	.000	157.040
	FORWARD EDGE	3557.061	1696.591	.000	83.122	-20.358	.000	117.198
3								
	BACK EDGE	3557.074	1783.743	.000	83.257	-14.539	.000	116.859
	FORWARD EDGE	3462.044	2012.932	.000	61.550	-28.623	.000	81.599
4								
	BACK EDGE	3461.924	2002.959	.000	61.584	-13.129	.000	82.366
	FORWARD EDGE	3364.955	2262.455	.000	39.283	-31.091	.000	36.554
5								
	BACK EDGE	3364.669	2139.670	.000	39.283	4.841	.000	53.308
	FORWARD EDGE	3258.095	2395.520	.000	23.141	-8.593	.000	-9.919
6								
	BACK EDGE	3257.880	1935.789	.000	23.144	9.941	.000	38.728
	FORWARD EDGE	3109.604	2156.177	.000	21.288	6.724	.000	-46.797
7								
	BACK EDGE	3109.222	1319.074	.000	21.288	3.652	.000	67.563
	FORWARD EDGE	2784.817	1576.244	.000	40.848	14.005	.000	-115.504
8								
	BACK EDGE	2782.422	735.404	.000	40.848	-4.138	.000	163.311
	FORWARD EDGE	2278.010	1387.362	.000	105.211	17.619	.000	-223.956
9								
	BACK EDGE	2269.736	743.309	.000	105.211	-2.637	.000	296.280
	FORWARD EDGE	1888.403	152.276	.000	91.137	-1.885	.000	-275.378
10								
	BACK EDGE	1888.579	199.243	.000	91.137	3.137	.000	274.169
	FORWARD EDGE	1654.068	116.880	.000	43.655	-2.364	.000	-201.537
11								
	BACK EDGE	1655.621	91.634	.000	43.655	.924	.000	188.356
	FORWARD EDGE	1549.218	143.452	.000	32.947	-.187	.000	-165.289
12								
	BACK EDGE	1548.603	117.234	.000	32.947	-.190	.000	170.952
	FORWARD EDGE	1493.176	195.647	.000	33.419	.031	.000	-168.190
13								
	BACK EDGE	1493.141	187.279	.000	33.419	-.048	.000	168.498
	FORWARD EDGE	1475.387	182.020	.000	33.715	.034	.000	-168.449
14								
	BACK EDGE	1475.386	182.020	.000	33.715	.034	.000	168.449
	FORWARD EDGE	1493.141	187.280	.000	33.419	-.048	.000	-168.498
15								
	BACK EDGE	1493.176	195.648	.000	33.419	.031	.000	168.190
	FORWARD EDGE	1548.603	117.236	.000	32.947	-.190	.000	-170.951
16								
	BACK EDGE	1549.217	143.455	.000	32.947	-.187	.000	165.289
	FORWARD EDGE	1655.619	91.636	.000	43.655	.924	.000	-188.355

Table 1 (contd)

17							
BACK EDGE	1654.067	116.882	.000	43.655	-2.364	.000	201.537
FORWARD EDGE	1888.577	199.246	.000	91.136	3.137	.000	-274.169
18							
BACK EDGE	1888.401	152.280	.000	91.136	-1.885	.000	275.378
FORWARD EDGE	2269.731	749.315	.000	105.211	-2.637	.000	-296.279
19							
BACK EDGE	2279.004	1387.370	.000	105.211	17.619	.000	223.955
FORWARD EDGE	2782.413	735.404	.000	40.848	-4.138	.000	-163.311
20							
BACK EDGE	2784.808	1576.247	.000	40.848	14.005	.000	115.503
FORWARD EDGE	3109.210	1319.069	.000	21.289	3.652	.000	-67.564
21							
BACK EDGE	3109.592	2156.180	.000	21.289	6.725	.000	46.798
FORWARD EDGE	3257.866	1935.779	.000	23.145	9.942	.000	-38.727
22							
BACK EDGE	3258.081	2395.519	.000	23.144	-8.585	.000	9.902
FORWARD EDGE	3364.653	2139.643	.000	39.288	4.851	.000	-53.330
23							
BACK EDGE	3364.878	2262.403	.000	39.286	-38.073	.000	-36.549
FORWARD EDGE	3461.844	2002.891	.000	61.594	-13.108	.000	-82.380
24							
BACK EDGE	3461.863	2012.812	.000	61.589	-28.577	.000	-81.700
FORWARD EDGE	3556.894	1783.621	.000	83.304	-14.497	.000	-116.967
25							
BACK EDGE	3556.906	1696.394	.000	83.293	-20.260	.000	-116.934
FORWARD EDGE	3689.974	1424.062	.000	109.200	-10.571	.000	-156.848
26							
BACK EDGE	3689.982	1287.168	.000	109.212	6.316	.000	-156.795
FORWARD EDGE	3804.627	1096.606	.000	129.031	6.720	.000	-186.549

LNO. LT(I) 8 3 7 8 9 10 11 12 13

ELEMENT NO. 13 WITH 1 LAYERS. TYPE 1

INITIAL CONDITIONS

LAMINATES ROUTINE - INPUT

MATERIAL	E1	NU21	G12	E2	RHO
1	.19640000+08	.26000000+00	.76500000+06	.24800000+07	.59000000-01

LAMINATE CONSTANTS

Table 1 (contd)

LAMINATE (1)

LAYER	MATERIAL	T	THETA	RHO
1	1	.70000000-02	.17679962+02	.59000000-01
2	1	.70000000-02	-.17679962+02	.59000000-01
3	1	.70000000-02	.17679962+02	.59000000-01
4	1	.70000000-02	-.17679962+02	.59000000-01
5	1	.70000000-02	.17679962+02	.59000000-01
6	1	.70000000-02	-.17679962+02	.59000000-01

(6X6) COMBINED ARRAY (INDEPENDENT VARIABLES EPSILON BAR AND KAPPA BAR)

.70181434+06	.90435284+05	.00000000	-.76293945-04	-.11444092-04	-.13588453+04
.90435284+05	.10898313+06	.00000000	-.11444092-04	-.15258789-04	-.11353240+03
.00000000	.00000000	.19050105+06	-.67942267+03	-.56766196+02	-.22888184-04
-.76293945-04	-.11444092-04	-.13588453+04	.10316670+03	.13293987+02	.95367432-06
-.11444092-04	-.15258789-04	-.11353240+03	.13293987+02	.16020520+02	.74505806-07
-.67942267+03	-.56766196+02	-.22888184-04	.47683716-06	.37252903-07	.28003654+02

LAMINATE EXTENSIONAL AND BENDING STIFFNESSES FOR ZERO CURVATURE CASE

EL=	.14923101+08	ET=	.23173739+07	NULT=	.12885927+00	NUTL=	.82980993+00	GLT=	.22678696+07
DL=	.98320378+02	DT=	.15986689+02	NULTP=	.80623779+00	NUTLP=	.13109259+00	DLT=	.26668690+02

RHO AVE = .58999998-01

(6X6) INVERSE OF COMBINED ARRAY (INDEPENDENT VARIABLES N AND M)

.16718086-05	-.13478753-05	.15399592-13	.96937729-12	-.10153108-11	.75658049-04
-.13478753-05	.10281857-04	-.43910064-14	-.10284390-11	.97231488-11	-.23719408-04
.76997959-14	-.21955034-14	.55120815-05	.37829026-04	-.11859706-04	.36131768-11
.96937725-12	-.10284390-11	.75658048-04	.11372848-01	-.91692199-02	-.25820506-09
-.10153108-11	.97231488-11	-.23719408-04	-.91692199-02	.69944610-01	.96934415-10
.37829025-04	-.11859705-04	.36131769-11	-.12910253-09	.48467204-10	.37497154-01

LAMINATE EXTENSIONAL AND BENDING STIFFNESSES WITH LOWER SURFACE AT Z = -.0210

EL=	.14241776+08	ET=	.23156831+07	NULT=	.13109258+00	NUTL=	.80623779+00	GLT=	.21597579+07
DL=	.87928721+02	DT=	.14297027+02	NULTP=	-.13109259+00	NUTLP=	-.80623778+00	DLT=	.26668690+02

Table 1 (contd)

	L	T	LT
N SUB I VALUES	.14842639+04	.18464940+03	.00000000
M SUB I VALUES	.33567055+02	-.66698766-02	.00000000
EPSILON BAR VALUES	.22325209-02	-.10206388-03	.12698881-02
KAPPA BAR VALUES	.39181417+00	-.30825023+00	.53958366-01

LAYER	BETA	SIGMA 1	SIGMA 2	SIGMA 3
1	.00000000	-.59940511+05	.44040059+04	-.17043368+05
1	.17679962+02	-.63869966+05	.83324619+04	.47190068+04
2	.00000000	-.29437564+05	.37652237+04	.10190618+05
2	-.17679962+02	-.32272573+05	.66002321+04	-.12966227+04
3	.00000000	.27071105+05	.52992363+04	.94225327+04
3	.17679962+02	.30515928+05	.18544122+04	.13845769+04
4	.00000000	.43608132+05	.34935926+04	-.94225330+04
4	-.17679962+02	.45361145+05	.17405787+04	.39229740+04
5	.00000000	.11408272+06	.61944666+04	.35888434+05
5	.17679962+02	.12490082+06	-.46236377+04	-.19498530+04
6	.00000000	.11665383+06	.32219614+04	-.29035684+05
6	-.17679962+02	.12299486+06	-.31190750+04	.91425708+04

IM= 1 E1= .19640000+08 E2 UPPER= .24800000+07 G12 UPPER= .76500000+06

LAYER	BETA	EPSILON 1	EPSILON 2	EPSILON 3	TEMP1	TEMP2
1	.00000000	-.30519608-02	.17758088-02	-.22278913-01	.00000000	.00000000
1	.17679962+02	-.32519840-02	.33598637-02	.61686364-02		
2	.00000000	-.14988577-02	.15182354-02	.13321069-01	.00000000	.00000000
2	-.17679962+02	-.16432063-02	.26613839-02	-.16949316-02		
3	.00000000	.13783658-02	.21367888-02	.12317036-01	.00000000	.00000000
3	.17679962+02	.15537641-02	.74774684-03	.18099044-02		
4	.00000000	.22203733-02	.14087067-02	-.12317037-01	.00000000	.00000000
4	-.17679962+02	.23096306-02	.70184623-03	.51280705-02		
5	.00000000	.58086924-02	.24977688-02	.46912985-01	.00000000	.00000000
5	.17679962+02	.63595122-02	-.18643700-02	-.25488275-02		
6	.00000000	.59396042-02	.12991780-02	-.37955142-01	.00000000	.00000000
6	-.17679962+02	.62624675-02	-.12576915-02	.11951073-01		

Appendix

Material Properties

Tables A-1, A-2, and A-3 present tabulated material properties for the composite materials and metals used in COM-TANK.

Table A-1. Boron/epoxy material properties ($v_f = 0.50$)

θ, deg	E_1, $\times 10^{-6}$ psi	E_2, $\times 10^{-6}$ psi	μ_{21}	G_{12}, $\times 10^{-6}$ psi	α_1, $\times 10^{-6}$ in./in./°F	α_2, $\times 10^{-6}$ in./in./°F
0	29.25	1.99	0.29	5.15	3.039	18.167
5	28.68	1.98	0.40	7.28	2.934	18.159
10	26.78	1.93	0.70	1.34	2.616	18.125
15	23.17	1.86	1.13	2.28	2.076	18.021
20	17.98	1.77	1.52	3.43	1.319	17.752
25	12.33	1.67	1.71	4.65	0.399	17.128
30	7.63	1.58	1.64	5.80	−0.474	15.799
35	4.52	1.53	1.42	6.74	−0.741	13.247
40	2.78	1.60	1.14	7.35	0.598	9.129
45	1.94	1.94	0.88	7.56	4.240	4.240
50	1.60	2.78	0.66	7.35	9.129	0.598
55	1.53	4.52	0.48	6.74	13.247	−0.741
60	1.58	7.63	0.34	5.80	15.799	−0.474
65	1.67	12.33	0.23	4.65	17.128	0.399
70	1.77	17.98	0.15	3.43	17.752	1.319
75	1.86	23.17	0.09	2.28	18.021	2.076
80	1.93	26.78	0.05	1.34	18.125	2.616
85	1.98	28.68	0.03	7.28	18.159	2.934
90	1.99	29.25	0.02	5.15	18.167	3.039

θ = wrap angle
E_1 = modulus of elasticity parallel to fibers
E_2 = modulus of elasticity perpendicular to fibers
μ_{21} = Poisson's ratio
G_{12} = shear modulus
α_1 = coefficient of thermal expansion parallel to fibers
α_2 = coefficient of thermal expansion perpendicular to fibers
v_f = volume fraction of fibers

Table A-2. Graphite/epoxy material properties ($v_f = 0.57$)

θ, deg	E_1, $\times 10^{-6}$ psi	E_2, $\times 10^{-6}$ psi	μ_{21}	G_{12}, $\times 10^{-6}$ psi	α_1, $\times 10^{-6}$ in./in./°F	α_2, $\times 10^{-6}$ in./in./°F
0	19.64	2.484	0.25	0.76	0.093	22.351
5	19.30	2.47	0.31	0.90	−0.043	22.303
10	18.21	2.43	0.47	1.29	−0.450	22.138
15	16.29	2.36	0.70	1.89	−1.117	21.782
20	13.59	2.28	0.94	2.62	−1.997	21.090
25	10.44	2.29	1.10	3.40	−2.952	19.805
30	7.46	2.13	1.12	4.13	−3.643	17.537
35	5.13	2.14	1.09	4.73	−3.397	13.854
40	3.59	2.29	0.94	5.12	−1.298	8.705
45	2.71	2.71	0.77	5.25	3.067	3.067
50	2.29	3.59	0.60	5.12	8.705	−1.298
55	2.14	5.13	0.45	4.73	13.854	−3.397
60	2.13	7.46	0.33	4.13	17.537	−3.643
65	2.29	10.44	0.23	3.40	19.805	−2.952
70	2.28	13.59	0.16	2.62	31.090	−1.997
75	2.36	16.29	0.10	1.89	21.782	−1.117
80	2.43	18.21	0.06	1.29	22.138	−0.450
85	2.47	19.30	0.04	0.90	22.303	−0.043
90	2.48	19.64	0.03	0.76	22.351	0.093

θ = wrap angle
E_1 = modulus of elasticity parallel to fibers
E_2 = modulus of elasticity perpendicular to fibers
μ_{21} = Poisson's ratio
G_{12} = shear modulus
α_1 = coefficient of thermal expansion parallel to fibers
α_2 = coefficient of thermal expansion perpendicular to fibers
v_f = volume fraction of fibers

Table A-3. Metal material properties

Type	Modulus of elasticity, $\times 10^{-6}$ psi	Poisson's ratio	Shear modulus, $\times 10^{-6}$ psi	Coefficient of thermal expansion, $\times 10^{-6}$ in./in./°F	Density, lb/in.^{3}
Aluminum (6061)	9.9	0.30	3.8	13.0	0.10
Titanium (6AR4V)	16.0	0.29	6.2	4.6	0.16
Steel (301)	29.0	0.16	12.5	9.2	0.29
Magnesium (ZK60)	6.5	0.36	2.4	14.0	0.06
Nickel	30.0	0.31	11.5	7.4	0.32
Invar	20.0	0.29	7.8	0.9	0.29

References

1. Schulz, J. C., " 'Netting' Analysis of Filament-Wound Pressure Vessels," ASME Publication 63-WA-223, presented at ASME Winter Annual Meeting, Philadelphia, Penn., Nov. 1963.
2. Fraser, A. F., *Multiple Layer Filament-Wound Chambers,* Report TD-12, Aerojet-General Corp., Azusa, Calif., Jan. 1961.
3. Zickel, J., *Isotensoid Pressure Vessels,* Report TD-11, Aerojet-General Corp., Azusa, Calif., Dec. 1960.
4. Stang, D. A., "The Use of Planar Ribbon Winding for Control of Polar Build-Up in Filament-Wound Tankage," Paper II-1A-2, *Proc. SAMPE,* Vol. 14, 1968.
5. Dong, S. B., "Analysis of Laminated Shells of Revolution," *ASCE, J. Eng. Mech. Div.,* Dec. 1966.
6. *Thermoelastic Analysis of Fibrous Composites and Non-Homogeneous Laminates Via the LILAC II Computer Code,* Mechanics Section Report 68-012, General Electric Co., Space Sciences Laboratory, Philadelphia, Penn., July 1968.
7. Anderson, R. G., *Applications Technology Satellite Apogee Motor (Description and Performance Characteristics),* Technical Memorandum 33-340. Jet Propulsion Laboratory, Pasadena, Calif., Jan. 1968.

NASA — JPL — Coml., L.A., Calif.