NASA TECH BRIEF

NASA Pasadena Office

NASA Tech Briefs announce new technology derived from the U.S. space program. They are issued to encourage commercial application. Tech Briefs are available on a subscription basis from the National Technical Information Service, Springfield, Virginia 22151. Requests for individual copies or questions relating to the Tech Brief program may be directed to the Technology Utilization Office, NASA, Code KT, Washington, D.C. 20546.

Improved Feedback Shift Register

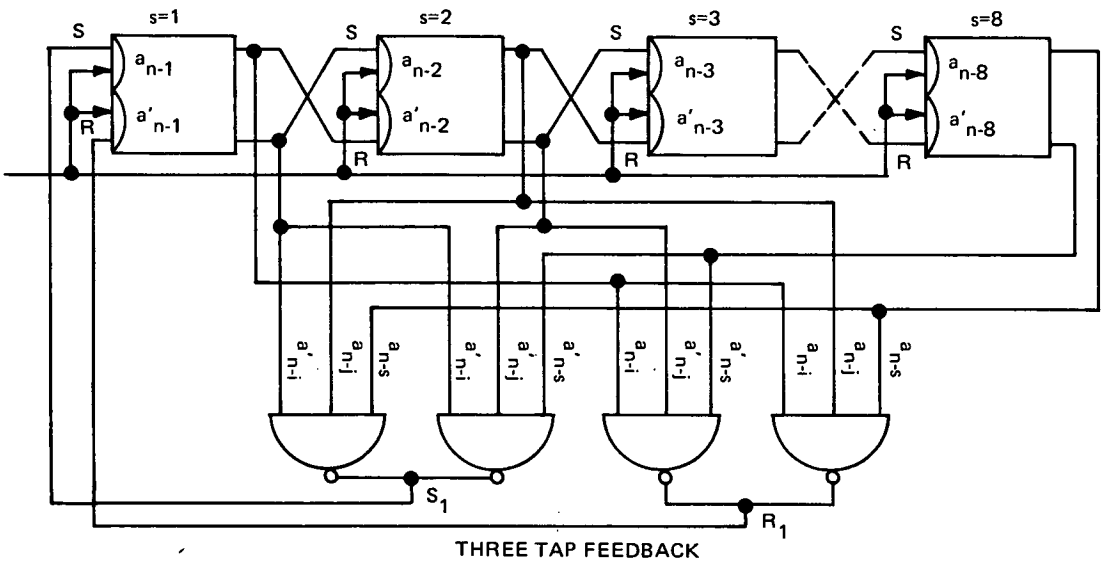

THREE TAP FEEDBACK
FIGURE A. i=1

The problem:

Currently feedback shift registers (FSR) of s stages, which use a two tap feedback decoding structure, cannot generate a maximal length sequence (2^S-1 states), when s takes on the value of certain integers.

The solution:

A design has been formulated which uses a three tap feedback decoding scheme. The taps are selected from appropriate stages of the feedback register. This results in the generation of near maximal length sequences (2^S-2 or 2^S-4 states) for any integral value of s. These sequences will be either 1 or 3 increments shorter than a maximal length sequence. In addition the autocorrelation function of the three tap FSR shows a large negative correlation at 180° out of phase, in addition to the normal positive 0° phase. This is very useful in obtaining sequence synchronization patterns.

TABLE 1

s	i	j	2^S-2
4	1	2	14
5	1	3	30
6	1	2	62
7	1	5	126
8	1	2	254
9	2	6	510
10	2	3	1022
11	1	3	2046
12	2	7	4094
13	-	-	-
14	1	2	16382
15	3	5	32766
16	1	2	65534
17	1	11	131070
18	1	12	262142
19	1	7	524286
20	1	14	1048574

(continued overleaf)

This document was prepared under the sponsorship of the National Aeronautics and Space Administration. Neither the United States Government nor any person acting on behalf of the United States Government assumes any liability resulting from the use of the information contained in this document, or warrants that such use will be free from privately owned rights.

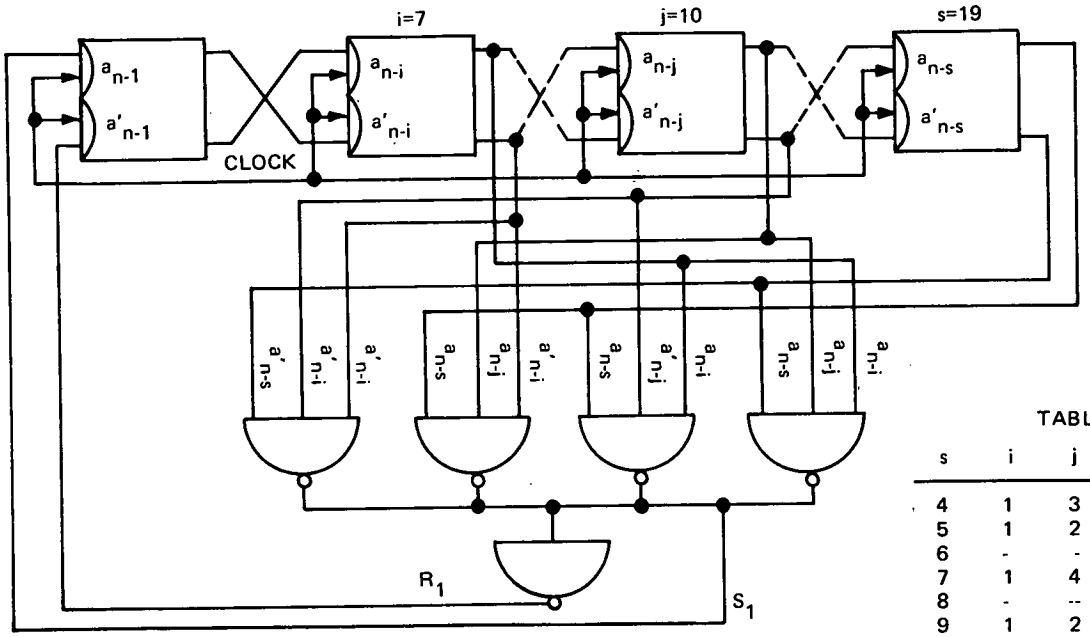

THREE TAP FEEDBACK
FIGURE B. $i \neq 1$

TABLE 2

s	i	j	2^s-4
4	1	3	12
5	1	2	28
6	-	-	-
7	1	4	124
8	-	--	-
9	1	2	508
10	1	5	1020
11	1	4	2044
12	1	3	4092
13	1	2	8188
14	-	-	
15	1	12	32764
16	1	7	65532
17	1	14	131068
18	5	9	262140
19	7	10	524284
20	5	7	1048572

How it's done:

It has been found that for every integer value of s number of stages (except for s equal to 13 in the 2^S-2 case) up to relatively large values, at least one near maximal length sequence can be generated providing the three stages (designated as i, j, s) to be used in the feedback gating structure are properly selected. The last stage of the feedback register is always used. This is the s parameter. The i and j stages may vary depending on the sequence length. As shown in Figure A, an 8 stage feedback shift register with a three-tap structure is connected to provide a 254 counting (2^S-2) sequence. The selected feedback stages are i=1, j=2, and s=8. When i=1 (first stage) only four nand gates are required to implement the feedback logic.

In Figure B, the nineteen-stage three-tap feedback shift register is connected to provide a 52,484 counting (2^S-4) sequence. The selected feedback stages are 1=7, j=10, and s=19. Since $i \neq 1$ five nand gates are required for this implementation.

By utilizing the data shown in Tables 1 & 2 (which indicate the appropriate feedback stage selections) and connecting the feedback logic as shown in the figures, near maximal length cycles can be realized for each value of s for cycle lengths of 2^S-2 and 2^S-4.

Note:

Requests for further information may be directed to:

Technology Utilization Officer
NASA Pasadena Office (JPL)
4800 Oak Grove Drive
Pasadena, California 91103
Reference: B72-10226

Patent status:

This invention has been patented by NASA (U.S. Patent No. 3,535,642). Inquiries concerning non-exclusive or exclusive license for its commercial development should be addressed to:

Patent Counsel
NASA Pasadena Office
4800 Oak Grove Drive
Pasadena, California 91103

Source: M. Perlman of
Jet Propulsion Lab
under contract to
NASA Pasadena Office
(NPO-10351)