Stu

N72-18082

COMMUNICATION THEORY OF QUANTUM SYSTEMS

HORACE P. H. YUEN

CASE FILE COPY

TECHNICAL REPORT 482

AUGUST 30, 1971

MASSACHUSETTS INSTITUTE OF TECHNOLOGY
RESEARCH LABORATORY OF ELECTRONICS
CAMBRIDGE, MASSACHUSETTS 02139

The Research Laboratory of Electronics is an interdepartmental laboratory in which faculty members and graduate students from numerous academic departments conduct research.

The research reported is this document was made possible in part by support extended the Massachusetts Institute of Technology, Research Laboratory of Electronics, by the JOINT SERVICES ELECTRONICS PROGRAMS (U. S. Army, U. S. Navy, and U. S. Air Force) under Contract No. DA 28-043-AMC-02536(E), and by the National Aeronautics and Space Administration (Grant NGL 22-009-013).

Requestors having DOD contracts or grants should apply for copies of technical reports to the Defense Documentation Center, Cameron Station, Alexandria, Virginia 22314; all others should apply to the Clearinghouse for Federal Scientific and Technical Information, Sills Building, 5285 Port Royal Road, Springfield, Virginia 22151.

THIS DOCUMENT HAS BEEN APPROVED FOR PUBLIC RELEASE AND SALE; ITS DISTRIBUTION IS UNLIMITED.

MASSACHUSETTS INSTITUTE OF TECHNOLOGY

RESEARCH LABORATORY OF ELECTRONICS

Technical Report 482 August 30, 1971

COMMUNICATION THEORY OF QUANTUM SYSTEMS

Horace P. H. Yuen

Submitted to the Department of Electrical Engineering at the Massachusetts Institute of Technology in June 1970 in partial fulfillment of the requirements for the degree of Doctor of Philosophy.

(Manuscript received January 1, 1971)

THIS DOCUMENT HAS BEEN APPROVED FOR PUBLIC RELEASE AND SALE; ITS DISTRIBUTION IS UNLIMITED.

Abstract

The primary concern in this research is with communication theory problems incorporating quantum effects for optical-frequency applications. Under suitable conditions, a unique quantum channel model corresponding to a given classical space-time varying linear random channel is established. A procedure is described by which a proper density-operator representation applicable to any receiver configuration can be constructed directly from the channel output field. Some examples illustrating the application of our methods to the development of optical quantum channel representations are given.

Optimizations of communication system performance under different criteria are considered. In particular, certain necessary and sufficient conditions on the optimal detector in M-ary quantum signal detection are derived. Some examples are presented. Parameter estimation and channel capacity are discussed briefly.

TABLE OF CONTENTS

Part I. DEVELOPMENT OF COMMUNICATION SYSTEM MODELS

A. GENERAL INTRODUCTION AND SUMMARY OF PART I 1

1.1 Summary of Part I 2

1.2 Relation to Previous Work 2

1.3 Nature of our Theory 3

1.4 Background 4

1.5 Outline of Part I 4

B. CLASSICAL RANDOM FIELD PROPAGATION AND COMMUNICATION SYSTEMS 6

2.1 Partial Differential Equation Representation of Channels 6

2.1.1 General Case 8

2.1.2 Markov Case 12

2.1.3 Stationary Case 17

2.2 Nondifferential Filter Channels 18

2.3 System Normal and Noise Normal Modes 19

2.4 Stochastic Channels 21

2.4.1 Random Green's Function 21

2.4.2 Stochastic Normal Modes 22

2.5 Stochastic Signals 24

2.6 Relation to Ordinary Filter Description 25

2.7 Conclusion 27

C. QUANTUM RANDOM PROCESSES 28

3.1 Quantum Probabilistic Theory 28

3.1.1 Self-adjoint Quantum Variables 29

3.1.2 Non-Hermitian Quantum Observables 29

3.1.3 Quasi Densities and Characteristic Functions 32

3.1.4 Gaussian Quasi Variables 34

3.1.5 Statistically Independent Quasi Variables 37

3.1.6 Sums of Independent Quasi Variables 39

3.2 Quantum Stochastic Processes 41

3.2.1 Fundamental Characterization 41

3.2.2 Gaussian Quasi Processes 43

3.2.3 Karhunen-Loève Expansion for Quantum Processes 43

3.2.4 Markov Quasi Processes 45

3.2.5 Stationary Quantum Processes 47

3.3 Conclusion 48

CONTENTS

D. QUANTUM FIELD PROPAGATION AND CLASSICAL CORRESPONDENCE 49

4.1 General Theory of Quantum Field Propagation 49

4.1.1 General Case 50

4.1.2 Markov Case 52

4.1.3 Stationary Case 56

4.2 Necessity of Introducing Quantum Noise Source and Preservation of Commutation Rules 59

4.2.1 General Case 60

4.2.2 Markov Case 61

4.2.3 Stationary Case 62

4.3 Classical Description of Quantum Field Propagation 63

4.4 Quantum Classical Field Correspondence 64

4.4.1 General Case 64

4.4.2 Markov Case 69

4.4.3 Stationary Case 70

4.5 Conclusion 70

E. GENERAL QUANTUM CHANNEL REPRESENTATION 71

5.1 Quantum Classical Correspondence for Stochastic Channels 71

5.1.1 General Case 72

5.1.2 Markov Case 73

5.1.3 Stationary Case 74

5.2 Stochastic Signals 75

5.3 Other Additive Noise and Noise Sources 77

5.4 Quantum Classical Correspondence for Nondifferential Filter Channels 78

5.5 Channel Representation for Different Receiver-Transmitter Configurations 79

5.5.1 Theory of Receiver Input Representation 79

5.5.2 Examples 85

5.6 Relative Optimality of Different Receiver Configurations 88

5.7 Complete Channel Representation 91

5.8 Conclusion 93

F. APPLICATION TO OPTICAL CHANNELS 95

6.1 Consistency Conditions for the Classical Quantum Transition 95

6.2 Further Considerations 97

CONTENTS

6.3 Radiative Loss and Dissipative Channels 100
6.3.1 Radiative Loss Channel 100
6.3.2 Dissipative Channel 102
6.3.3 Comparison 104
6.4 Atmospheric Channel 104
6.5 Multiple Scattering Channel 108
6.6 Guided Optical Transmission 109
6.7 Conclusion 112

G. CONCLUSION TO PART I 114
7.1 Summary of Results 114
7.2 Suggestions for Further Research 115

Part II. OPTIMIZATION OF COMMUNICATION SYSTEM PERFORMANCE

A. INTRODUCTION AND DETECTION THEORY FORMULATION 116
1.1 Relation to Previous Work 116
1.2 Background 116
1.3 Original Formulation of the Detection Problem 117
1.4 Operator Formulation of the Detection Problem 118
1.5 Broader Operator Formulation of the Detection Problem 119
1.6 Operator Formulation Allowing Only Self-adjoint Observables 119
1.7 Conclusion 121

B. OPTIMAL DETECTOR SPECIFICATION AND EXAMPLES 122
2.1 Conditions on Optimal Detectors of Problem II 122
2.2 Conditions on Optimal Detectors of Problem III 126
2.3 Simple Detection Examples 127
2.4 Conclusion 128

C. OTHER PERFORMANCE OPTIMIZATION PROBLEMS 130
3.1 Estimation of Random Parameters 130
3.2 Estimation of Nonrandom Parameters 131
3.3 Channel Capacity 132
3.4 Other Problems 133
3.5 Summary of Part II 134

D. GENERAL CONCLUSION 135

CONTENTS

Appendix A	Mathematical Framework of Quantum Theory	137
Appendix B	Treatment of the Vector Markov Case	142
Appendix C	Fluctuation-Dissipation-Amplification Theorems	146
Appendix D	Generalized Classical Quantum Correspondence	149
Appendix E	Theory of Quantum Measurements	150
Appendix F	Relations of Linear Fields	155
Appendix G	Direct Calculation of Density Operators from Fields	158
Appendix H	Mathematical Definitions	161
Appendix I	Optimization Conditions and Proof of Theorem 15	163
Acknowledgment		167
References		168

Part I. Development of Communication System Models

A. GENERAL INTRODUCTION AND SUMMARY OF PART I

The familiar statistical communication theory stemming from the work of Shannon,[1] Kotelnikov,[2] and Wiener[3] is a general mathematical theory. For its application appropriate mathematical models need to be established for the physical sources and channels. For frequencies around and below microwave the electromagnetic fields can be accurately described by classical physics, and the statistical theory can be applied directly to channels for such fields. An example is furnished by the study of microwave fading dispersive communication systems.[4]

At higher frequencies, however, quantum effects become important. Even an otherwise deterministic signal at the output of the channel has to be replaced by a statistical quantum description. Furthermore, a choice among various possible, but mutually exclusive, measurements on these signals has to be made to extract the relevant information. Therefore we have to develop communication system models in a proper quantum-mechanical manner, and to consider the measurement optimization problem that is superimposed upon the existing theories. Since measurement in quantum theory[5-9] is of a totally different nature from classical measurement, special physical consideration has to be given to the receiver implementation problem. The necessity of investigating this class of quantum communication problems springs from recent advances in quantum electronics, which indicate that efficient communications at infrared and optical frequencies will be feasible in the future. We shall refer to the usual communication theory[10-14] for which quantum effects are neglected as <u>classical communication theory</u>, in contradistinction to <u>quantum communication theory</u>.

The necessity of considering quantized electromagnetic fields for communication applications was suggested twenty years ago by Gabor[15] in connection with the finiteness of the channel capacity. It was then soon recognized[16-19] that when the signal frequency is high relative to the system temperature, proper quantum treatment has to be given in communication analysis. Since the advent of optical masers there has been more extensive consideration of quantum communication, beginning with the work of Gordon.[20,21] In the early studies[18-36] attention was concentrated primarily on the performance of the system, in particular on the channel capacity, incorporating specific receivers of measurement observables. Some generalized measurement schemes have also been considered.[37-41] Development of general theories closer in spirit to classical communication theory was pioneered by Helstrom,[42-44] who has formulated and solved some basic problems in the quantum statistical theory of signal detection and estimation. Further significant works of a similar nature are due to Jane W. S. Liu[45,46] and to Personick.[47,48] A comprehensive review[49] of these studies on optimal quantum receivers is available. There are still many unsolved fundamental problems in a general quantum communication theory, however, some of which will be treated in this report.

As for system modeling, we want to find a specific density operator channel representation for a given communication situation. This problem has not been considered in general before. The models that have been used pertain to representations of the received fields and are obtained by detailed specific analysis in simple cases, or by judicious choice from some standard density operator forms in more complicated situations.[45, 50] The quantum channel representation for a given classical linear filter channel, for example, has not been given. Such relations between the input and output signals are needed for formulating problems such as signal design for a given channel-receiver structure. A prime objective of our study is to establish a general procedure for setting up such quantum channel representations, with emphasis upon unique or canonical quantum correspondents of given classes of classical channels.

Our work is divided into two relatively independent parts on system modeling and system optimization. In Part I we establish a procedure by which various density operator channel representations can be written from a given classical channel specification. This is achieved by a quantum field description of the communication system parallel to the classical description. The problems of transmitter and receiver modeling are also considered. Some applications to optical frequency channels[51] are given. In Part II we have derived some necessary and sufficient conditions for general optimal receiver specification in M-ary quantum detection.[52, 53] Estimation and channel-capacity problems are also briefly treated. Some examples illustrating the major results are given. The study reported here provides the most general existing framework for quantum communication analysis.

1.1 Summary of Part I

In Part I we are concerned with the task of establishing quantum-mechanical communication system models for various communication situations. We shall develop quantum channel representations for different transmission media, signaling schemes, and receiver classes. These representations are clearly prerequisites of a detailed system analysis. In particular, we want to find, under reasonable assumptions, a canonical quantum channel model corresponding to a given classical specification. A general procedure that yields the quantum channel characterization for a broad class of systems through the classical characterization will be described. We shall give a preliminary discussion on the purpose and nature of our theory.

1.2 Relation to Previous Work

The development of quantum communication system models has not been considered in general before. In previous work on quantum communication the received fields have been considered directly. The receiver is usually taken[42-49] to be a lossless cavity that captures the incoming field during the signaling interval. The desired quantum measurement can then be made on the cavity field, which is represented in a modal expansion in terms of orthonormal spatial-temporal mode functions. While such a

model of the received field can be useful, it is not sufficient for describing general communication systems.

In the first place, a density operator representation for the cavity field modes may not describe all possible receivers. Second, the connection of the cavity field with the channel output field is unclear. The most important point, however, is that without knowledge of the channel output field commutator there is no way to accurately determine the cavity field density operator representation in general. Such a commutator, of course, is closely related to the channel properties. Thus a more detailed consideration is required to develop the receiver input density operator representations for the entire communication system. Furthermore, general relationships between the input signals and the output fields are needed for formulating problems such as signal design.

Our theory gives a general quantum description of communication systems including the channel, the transmitter, and the receiver. We shall develop a procedure by which a proper density operator representation can be constructed from the channel output field directly for any receiver configuration. The communication system will be described quantum-mechanically in a way that parallels the usual approach in classical communication theory. The complete quantum description of the channel output field will be given in terms of the signal and channel characterizations. While certain assumptions are made in our development, only given classical information will be used to supply the corresponding quantum information needed for a complete description of the communication system.

1.3 Nature of Our Theory

We restrict ourselves to communication systems that are described classically by randomly space-time-variant linear channels. We need to develop a quantum description for such systems, and for this purpose some explicit physical consideration is required. We frequently invoke the explicit physical nature of the signals as electromagnetic fields, and regard the "channel" as the medium for field transmission. We also make the important assumption that the field propagation is described by linear equations.

A description of communication systems from the viewpoint of classical random field propagation is discussed first. To develop the corresponding quantum theory, we need to establish certain concepts and results in quantum random processes. A development of linear quantum field propagation can then be given. When a classical channel is specified as a generally random space-time-variant linear filter[54-59] we shall regard its impulse response as the Green's function of a stochastic differential equation[56-59] describing signal transmission. Our theory then gives a quantum description of such a situation, and can therefore be viewed alternatively as a procedure for quantization of linear stochastic systems. Having obtained a quantum specification of the channel output field, we shall establish the procedure by which density operator representations can be constructed for realistic receiver configurations.

A most important purpose of our analysis is to give, under certain assumptions, the unique quantum system specification from the usual given classical specification. That assumptions are necessary in general should be apparent if we recall that quantum classical correspondences are frequently many to one. The utility of such a unique quantum classical correspondence is that we do not then need to analyze each communication situation anew, and can directly obtain the quantum characterization from the classical one without further reference to how the classical characterization was obtained. Such an approach is convenient and yields useful quantum models comparable to the classical ones. It can be applied without detailed knowledge of quantum theory. We shall give further discussions of these points when appropriate.

1.4 Background

While the specific theory presented here appears to be novel, it has significant roots in both classical random processes and quantum statistics.

Our system characterizations, for the most part, are given by state-variable differential equation descriptions as the laws governing field transmission. This mathematical treatment of classical stochastic systems is well known in the lumped-parameter case,[60-65] and can be extended immediately to distributive systems. Similar treatment of quantum stochastic systems leans heavily on the works of Lax.[66-73] In Section C we give a self-contained development of quantum random processes which is essential for our later treatment. To establish the quantum classical correspondence, we also need some generalized fluctuation dissipation theorems that will be discussed in the main text and in Appendix C.

We shall employ noncovariant quantum fields throughout our treatment which are discussed in many places (see, for example, Louisell[74] and Heitler[75]). A brief description of the mathematical framework of quantum theory is given in Appendix A.

1.5 Outline of Part I

In Section B we discuss classical communication from the viewpoint of random-field propagation. The system characterization is given in the relatively unusual differential equation form, which is suitable for transition to quantum theory. The concept of a random Green's function of a stochastic differential equation is introduced. The relationship of our description to a more common one is discussed. It should be noted that many features of this classical description are retained in the quantum domain.

In Section C we give a systematic treatment of quantum probabilities and quantum stochastic processes. The important notion of a Gaussian quantum process that is fundamental to much of our later discussions is introduced. New consideration is also given to the problem of summing independent quantum observables, and to the possibility of Karhunen-Loève expansion for quantum processes. This material may be useful in treatments of other quantum statistical problems.

In Section D we develop the theory of linear quantum field propagation paralleling

the classical development of Section B. A general characterization for Gaussian quantum field is given. The necessity of introducing quantum noise in extending the classical treatment to the quantum area is explicitly shown. The general problem of quantum classical channel correspondence is formulated and discussed. Under Markovian or stationary situations the resulting quantum system characterization is related to the classical one through the fluctuation-dissipation theorems, which specify the channel output field commutator.

In Section E a canonical quantum channel representation applying to any transmitter-receiver configuration is given. Possible methods for obtaining other representations are also discussed. The different resulting representations are considered and compared from several viewpoints. Emphasis is placed on the flexibility of our procedure for achieving convenient models. Generalization of the results to stochastic channels is discussed and detailed. Stochastic signals are considered. The entire communication system is then treated in a unified manner with a combined representation.

In Section F we discuss the quantum system models of some typical optical channels. The representations of radiative loss and dissipative channels are contrasted and simple treatments for the atmospheric and scattering channels are given. An optical transmission line is also considered from a basic physical description.

In Section G a detailed summary of the results of Part I is given. Suggestions are made for further work on some outstanding unsolved problems.

B. CLASSICAL RANDOM FIELD PROPAGATION AND COMMUNICATION SYSTEMS

We begin our development by considering the theory of classical random field propagation and the description of communication systems from this viewpoint. The most important point is that our quantum analysis will be carried out in a framework exactly analogous to the treatment considered here. Our quantum classical channel correspondence will also be established through the following differential equation representations. Furthermore, many features of our present classical description will be preserved in the quantum treatment.

The introduction of a physical field description for communication systems is not new. In classical analysis of optical channels[50, 51, 78-82] and of reverberations,[83, 84] the distributive character of the signals is also considered. Our approach is quite different from these works, however.

We shall now start consideration of the channel, by which we mean the medium for signal transmission. No modulation and coding will be discussed; instead we consider the channel outputs and inputs directly. The information-carrying signals are space-time dependent electromagnetic radiation fields that travel from a certain space-time region through the medium to a distant region. The channel should therefore be characterized in terms of the equations that govern electromagnetic field propagation.

In general, the channel introduces irreversible random transformations on the signals. Channel distortion and noise will be included in the dynamical equations as random driving forces or random coefficients. Our channel is thus generally a space-time dependent stochastic system. Such a characterization can be used to define the transition probability in the conventional description, as we shall see eventually. Throughout we assume, for simplicity, that depolarization effects of the transmission medium can be neglected. Furthermore, we consider only one polarization component so that we have a scalar rather than a vector field problem.

2.1 Partial Differential Equation Representation of Channels

Our communication channel is specified by the equations of electromagnetic field transmission through a given medium. To give a general description, let us consider a fundamental scalar field variable $\psi(\bar{r}, t)$ which can be complex and from which the electric and magnetic fields are obtained by linear operations. The precise nature of $\psi(\bar{r}, t)$ does not need to be specified yet. Let the dynamical equation describing the channel be of the form

$$\mathscr{L}\psi(\bar{r}, t) = E(\bar{r}, t) + \mathscr{F}(\bar{r}, t), \tag{1}$$

where $\mathscr{L}$ is a random space-time varying partial differential operator with respect to t and the components of $\bar{r}$, $E(\bar{r}, t)$ is the deterministic excitation, and $\mathscr{F}(\bar{r}, t)$ is

a random-noise driving field with zero average

$$\langle \mathscr{F}(\bar{r}, t) \rangle = 0.$$

We use the vector $\bar{r}$ to denote collectively the chosen space coordinates, and t is the time coordinate.

When $\psi(\bar{r}, t)$ is complex we also need to consider the equation

$$\mathscr{L}^{\dagger}\psi(\bar{r}, t) = E^{*}(\bar{r}, t) + \mathscr{F}^{*}(r, t), \tag{2}$$

where $\mathscr{L}^{\dagger}$ is the adjoint of the operator $\mathscr{L}$. The star notation means that the complex conjugate of the quantity is to be taken. The noise source $\mathscr{F}(\bar{r}, t)$ is generally assumed to be a Gaussian random field.

In general, $\mathscr{L}$ can be a nonlinear random operator. We shall always make the important assumption that $\mathscr{L}$ is a linear operator. We first consider the case wherein $\mathscr{L}$ is nonrandom but possibly space-time varying. Stochastic properties of $\mathscr{L}$ will be introduced later. The channel therefore becomes a spatial-temporal linear filter. All relevant quantities are also allowed to be generalized functions[85] including generalized random processes,[86] and suitable restrictions are assumed to insure the validity of the operations.

Let the domain of our $\psi(\bar{r}, t)$ be the set of square integrable functions,

$$\int_V \psi^{*}(\bar{r}, t)\, \psi(\bar{r}, t)\, d\bar{r}dt < \infty,$$

for integration over the space-time region V of interest. Every such function can be expanded in the product form[87]

$$\psi(\bar{r}, t) = \sum_k \phi_k(\bar{r})\, \beta_k(t) \tag{3}$$

$$= \sum_{k,n} \psi_{kn}\phi_k(\bar{r})\, y_n(t). \tag{4}$$

In order to insure that the distributive system can be conveniently separated into an infinite set of lumped parameter systems, or that the method of separation of variables can be applied, we let

$$\mathscr{L} = \mathscr{L}_1 + \mathscr{L}_2, \tag{5}$$

where $\mathscr{L}_1$ is an ordinary differential operator with respect to t, and $\mathscr{L}_2$ is one with respect to the components of $\bar{r}$. Both $\mathscr{L}_1$ and $\mathscr{L}_2$ are presumed to possess a complete set of orthonormal eigenfunctions in their respective domain with appropriate boundary conditions and definition of inner product. Equation 5 is then equivalent[87] to the condition that $\mathscr{L}$ possesses eigenfunctions separable in space and time arguments; that is,

$$\mathscr{L}\phi_{kn}(\bar{r},t) = \ell_{kn}\phi_{kn}(\bar{r},t) \tag{6}$$

$$\phi_{kn}(\bar{r},t) = \phi_k(\bar{r})\, y_n(t). \tag{7}$$

The assumption (5) simplifies analysis without being at the same time a severe restriction. In fact, in electromagnetic theory, wave equations that mix space and time are rarely encountered, if at all.

2.1.1 General Case

With the decomposition (5) we can generally expand $\psi(\bar{r},t)$ in the form (3) with $\phi_k(\bar{r})$ being the normalized eigenfunctions of $\mathscr{L}_2$ for the boundary condition of interest.

$$\mathscr{L}_2\phi_k(\bar{r}) = \lambda_k\phi_k(\bar{r}) \tag{8}$$

$$\int_{V_2} \phi_k^*(\bar{r})\, \phi_{k'}(\bar{r})\, W_2(\bar{r})\, dr = \delta_{kk'} \tag{9}$$

$$\sum_k \phi_k(\bar{r})\, \phi_k^*(\bar{r}')\, W_2(\bar{r}') = \delta(\bar{r}-\bar{r}'). \tag{10}$$

The spatial region under consideration is denoted by V_2. Here $\delta_{kk'}$ is the Kronecker delta, and $\delta(\bar{r}-\bar{r}')$ is the Dirac delta function. The inner product between two eigenfunctions is defined in general with respect to a possible weight function $W_2(\bar{r})$.[87,89]

The weight functions are usually required when the solution of the differential equation attenuates. In our case they will occur if there is spatial dissipation in the propagation. Such spatial dissipation will arise when $\mathscr{L}_2$ involves odd spatial derivatives in the wave equation of the electric or the magnetic field – a situation that is unlikely to occur for electromagnetic field transmission obeying Maxwell's equations. In particular, if the loss arises from a conductivity that is only frequency-dependent, odd-time rather than space derivatives appear in the wave equation. Therefore we assume for convenience throughout our treatment that

$$W_2(\bar{r}) = 1. \tag{11}$$

A more general discussion relaxing condition (11) is given in Appendix D.

Since $\mathscr{F}(\bar{r},t)$ is taken to be Gaussian, it is completely specified by the covariances

$$\langle \mathscr{F}(\bar{r},t)\mathscr{F}(\bar{r}'t')\rangle \stackrel{\Delta}{=} C_{\mathscr{F}\mathscr{F}}(\bar{r}t;\bar{r}'t') \tag{12}$$

$$\langle \mathscr{F}^*(\bar{r},t)\mathscr{F}(\bar{r}'t')\rangle \stackrel{\Delta}{=} C_{\mathscr{F}^*\mathscr{F}}(\bar{r}t;\bar{r}'t'). \tag{13}$$

Assuming that every sample function of $\mathscr{F}(\bar{r},t)$ is square-integrable, we can

generally expand[90]

$$\mathscr{F}(\bar{r}, t) = \sum_k \phi_k(\bar{r})\, f_k(t) \tag{14}$$

for a set of nonrandom functions $\{\phi_k(\bar{r})\}$ defined by (8)-(10) and another set of Gaussian stochastic processes $\{f_k(t)\}$. In general, the $\{f_k(t)\}$ are mutually dependent with statistics specified through (12)-(13). If we also write

$$E(\bar{r}, t) = \sum_k e_k(t)\, \phi_k(\bar{r}), \tag{15}$$

Eq. 1 is reduced to the following set of ordinary differential equations

$$(\lambda_k + \mathscr{L}_1)\, \beta_k(t) = e_k(t) + f_k(t). \tag{16}$$

These $\{\beta_k(t)\}$ define our field $\psi(\bar{r}, t)$ completely and will be referred to as the time-dependent spatial mode amplitudes or simply amplitudes.

We shall assume in general that the noise source is diagonal in $\phi_k(\bar{r})$. That is,

$$C_{\mathscr{F}\mathscr{F}}(\bar{r}t; \bar{r}'t') = \sum_k C^k_{\mathscr{F}\mathscr{F}}(t, t')\, \phi_k(\bar{r})\, \phi_k(\bar{r}'), \tag{17}$$

and

$$C_{\mathscr{F}^*\mathscr{F}}(\bar{r}t; \bar{r}'t') = \sum_k C^k_{\mathscr{F}^*\mathscr{F}}(t, t')\, \phi_k(\bar{r})\, \phi_k(\bar{r}'). \tag{18}$$

This assumption is discussed briefly in Appendix D. It holds when the noise source is spatially white, that is, δ-correlated in space. Under (17) and (18), the $\{f_k(t)\}$ becomes statistically independent with

$$\langle f_k(t) \rangle = 0 \tag{19}$$

$$\langle f_k(t)\, f_{k'}(t') \rangle = \delta_{kk'}\, C^k_{\mathscr{F}\mathscr{F}}(t, t') \tag{20}$$

$$\langle f^*_k(t)\, f_{k'}(t') \rangle = \delta_{kk'}\, C^k_{\mathscr{F}^*\mathscr{F}}(t, t'). \tag{21}$$

Note that when (20)-(22) are k-independent the noise field $\mathscr{F}(\bar{r}, t)$ will be spatially white. We shall refer to the system (16) with statistics (19)-(21) as our "general case," although still more general situations are also discussed in Appendix D.

We now proceed to investigate the properties of (16)-(21). We treat stochastic

integrals, etc., in the mean-square sense. No attention is paid to strict formal rigor. Careful treatments can be found elsewhere.[56-58, 60, 91-94]

Let $h_k(t,\tau)$ be the Green's function[87-89] of $\lambda_k + \mathscr{L}_1$,

$$(\lambda_k + \mathscr{L}_1)\, h_k(t,\tau) = \delta(t-\tau) \tag{22}$$

with the initial conditions

$$\left.\frac{\partial^p h(t,\tau)}{\partial t^p}\right|_{t=\tau_+} = 0, \qquad p = 0, 1, \ldots, n-2 \tag{23}$$

$$\left.\frac{\partial^{n-1}(t,\tau)}{\partial t^{n-1}}\right|_{t=\tau_+} = \frac{1}{a_o(\tau)} \tag{24}$$

when $\lambda_k + \mathscr{L}_1$ has the form

$$\lambda_k + \mathscr{L}_1 = a_o(t)\frac{d^n}{dt^n} + a_1(t)\frac{d^{n-t}}{dt^{n-1}} + \ldots + a_{n-1}(t)\frac{d}{dt} + a_n^k(t). \tag{25}$$

We will assume for simplicity throughout our work that $a_o(t) = 1$. We set

$$h_k(t,\tau) = 0, \qquad t < \tau. \tag{26}$$

This Green's function $h_k(t,\tau)$ is also the zero-state impulse response[95] of the differential system described by (16). The zero-state response $\beta_k(t)$ for an input $e_k(t)$,

$$(\lambda_k + \mathscr{L}_1)\, \beta_k(t) = e_k(t),$$

can therefore be written

$$\beta_k(t) = \int_{t_o}^{t} h_k(t,\tau)\, e_k(\tau)\, d\tau,$$

where $e_k(t)$ is started from $t = t_o$, and the initial state,

$$\beta_k\left(t_o^-\right);\ \left.\frac{d}{dt}\beta_k(t)\right|_{t_o^-};\ \ldots\ldots;\ \left.\frac{d^{n-1}}{dt^{n-1}}\beta_k(t)\right|_{t_o^-}, \tag{27}$$

is taken to vanish. When (27) is not zero we can include them in the differential equation (16) as sources by the so-called extended definition[87] of $(\lambda_k + \mathscr{L}_1)\,\beta_k(t)$ for non-homogeneous initial conditions. In general, for the form (25) we should enter as sources

on the right-hand side of (16)

$$\sum_{r=1}^{n} \sum_{h'=1}^{n} a_{n-n'}(t_o)\, \beta_k^{n'-r}(t_o)\, \delta^{r-1}(t-t_o). \tag{28}$$

We have used superscripts to denote derivatives with respect to the argument of the function. Thus (28) involves higher derivatives of the delta function.

The output $\beta_k(t)$ of (16) for arbitrary initial conditions can therefore be written down with $h_k(t,\tau)$ alone.

$$\beta_k(t) = \sum_{r=1}^{n} \sum_{n'=1}^{n} (-1)^{r-1} \frac{d^{r-1}}{d\tau^{r-1}} h_k(t,\tau)\Big|_{\tau=t_o} a_{n-n'}(t_o)\, \beta_k^{n'-r}(t_o)$$

$$+ \int_{t_o}^{t} h_k(t,\tau)\, e_k(\tau)\, d\tau + \int_{-\infty}^{t} h_k(t,\tau)\, f_k(\tau)\, d\tau. \tag{29}$$

With (19)-(21), the $\beta_k(t)$ are also independent Gaussian processes if the initial distribution for (27) is also jointly Gaussian and independent for different k. In general, the statistics of (27) are assumed to be independent of those of $\{f_k(t)\}$.

In many cases, however, it is reasonable to assume that the initial state (27) arises from the noise sources $f_k(\tau)$ before the signal is applied at t_o. Thus if we split the usually non-white additive noise into two parts

$$n_k(t) = \int_{-\infty}^{t} h_k(t,\tau)\, f_k(\tau)\, d\tau \tag{30}$$

$$= \int_{t_o}^{t} h_k(t,\tau)\, f_k(\tau)\, d\tau + \int_{-\infty}^{t_o} h_k(t,\tau)\, f_k(\tau)\, d\tau, \tag{31}$$

we can make the replacement

$$\sum_{r=1}^{n} \sum_{n'=1}^{n} (-1)^{r-1} \frac{d^{r-1}}{d\tau^{r-1}} h_k(t,\tau)\Big|_{\tau=t_o} a_{n-n'}(t_o)\, \beta_k^{n'-r}(t_o) = \int_{-\infty}^{t_o} h_k(t,\tau)\, f_k(\tau)\, d\tau. \tag{32}$$

In this case the first term on the right of (29) can be taken to be zero. We then just need to consider

$$\beta_k(t) = \int_{t_o}^{t} h_k(t,\tau)\, e_k(\tau)\, d\tau + n_k(t) \tag{33}$$

without further reference to initial conditions.

It is clear that the output statistics for $\beta_k(t)$ are now fully defined through $h_k(t,\tau)$,

and the statistics of $f_k(t)$ are given by (19)-(21). We can also form an arbitrary set of linear functionals of $\{\beta_k(t)\}$ which will be jointly Gaussian with statistics determined accordingly.

It is important to point out that the noise source $\mathscr{F}(\bar{r}, t)$ or $f_k(t)$ in our differential equation description is a thermal noise associated with the filter system. It is possible to have other independent noise added to $\psi(\bar{r}, t)$ or $\beta_k(t)$. Noises from different sources can clearly be treated together in a straightforward way.

2.1.2 Markov Case

With a particular choice of $\psi(\bar{r}, t)$ it may be possible under some approximations to have

$$C^k_{\mathscr{F}\mathscr{F}}(t, t') = 2K^k_1(t)\,\delta(t-t') \tag{34}$$

$$C^k_{\mathscr{F}^*\mathscr{F}}(t, t') = 2K^k_2(t)\,\delta(t-t') \tag{35}$$

for the corresponding noise source $\mathscr{F}(\bar{r}, t)$. In this case the $\{f_k(t)\}$ become independent white noises so that each $\beta_k(t)$ is a component of a vector Markov process.[60-65] This Markov vector process is formed by $\beta_k(t)$ and its higher derivatives.

With the same approximation that leads to (34) and (35) one frequently also finds that $\mathscr{L}_1$ only involves first time derivatives. Thus $\beta_k(t)$ becomes a Markov process by itself. For simplicity of presentation, we shall mainly consider this case instead of the vector Markov one. In Appendix B the vector Markov case is treated. As we only look at the variables $\{\beta_k(t)\}$ and their complex conjugates, the vector Markov case leads to results that are also similar to those obtained in the strict Markov case. This point is made explicit in Appendix B.

We therefore consider the first-order differential equation for each k.

$$(\lambda_k + \mathscr{L}_1)\,\beta_k(t) = e_k(t) + f_k(t) \tag{36}$$

$$\langle f_k(t)\rangle = 0 \tag{37}$$

$$\langle f_k(t)\, f_{k'}(t')\rangle = \delta_{kk'}\, 2K^k_1(t)\,\delta(t-t') \tag{38}$$

$$\langle f^*_k(t)\, f_{k'}(t')\rangle = \delta_{kk'}\, 2K^k_2(t)\,\delta(t-t'). \tag{39}$$

The functions $K^k_1(t)$ and $K^k_2(t)$ are commonly called <u>diffusion coefficients</u>. In such a representation the $\beta_k(t)$ are frequently complex so that we use the following vector and matrix notations when convenient.

$$\underline{\beta}_k(t) = \begin{pmatrix} \beta_k(t) \\ \beta_k^*(t) \end{pmatrix}$$

$$\underline{f}_k(t) = \begin{pmatrix} f_k(t) \\ f_k^*(t) \end{pmatrix}$$

$$\underset{\sim}{\mathscr{L}}_1 = \begin{pmatrix} \mathscr{L}_1 & 0 \\ 0 & \mathscr{L}_1^\dagger \end{pmatrix}$$

$$\underline{e}_k(t) = \begin{pmatrix} e_k(t) \\ e_k^*(t) \end{pmatrix}$$

$$\underset{\sim}{\lambda}_k = \begin{pmatrix} \lambda_k & 0 \\ 0 & \lambda_k^* \end{pmatrix},$$

and write

$$(\underset{\sim}{\lambda}_k + \underset{\sim}{\mathscr{L}}_1)\, \beta_k(t) = \underline{e}_k(t) + \underline{f}_k(t). \tag{40}$$

For this complex $\beta_k(t)$ case it is more appropriate to consider $\{\beta_k(t),\ \beta_k^*(t)\}$ as a jointly Markov process. To distinguish from the vector Markov case discussed above, we shall not refer to $\underline{\beta}_k(t)$ as a Markov vector process.

We shall now give a brief quantitative development that will be used in our later work. Further details may be found, for example, in the work of several authors.[60-65] In the present development, we follow closely Helstrom,[62] but also derive some other results of importance to us. For our situation of interest it is more convenient to adopt the Langevin-Stratonovich[60,61,65] or Ito[60,96] viewpoints rather than the Fokker-Planck-Kolmogorov[60,61,64] one. They are fully equivalent,[64] in our case, however.

We define the state transition matrix,[95] $\underset{\sim}{h}_k(t,\tau)$ of Eq. 40, by

$$(\underset{\sim}{\lambda}_k + \underset{\sim}{\mathscr{L}}_1)\, \underset{\sim}{h}_k(t,\tau) = 0, \qquad t > \tau \tag{41}$$

under the initial condition

$$\underset{\sim}{h}_k(\tau,\tau) = \underset{\sim}{I}. \tag{42}$$

Here

$$\underset{\sim}{I} = \begin{pmatrix} 1 & 0 \\ 0 & 1 \end{pmatrix}$$

and, for simplicity, we have taken the coefficient of d/dt in $\mathscr{L}_1$ to be unity. This transition matrix $\underset{\sim}{h}_k(t,\tau)$ is then

$$\underset{\sim}{h}_k(t,\tau) = \begin{pmatrix} h_k(t,\tau) & 0 \\ 0 & h_k^*(t,\tau) \end{pmatrix}, \tag{43}$$

where, for $t > \tau$, $h_k(t,\tau)$ is the same as the zero-state impulse response of (36).

We define the additive noise vector

$$\underline{n}_k(t) = \int_{-\infty}^{t} \underset{\sim}{h}_k(t,\tau)\, \underline{f}_k(\tau)\, d\tau \tag{44}$$

$$= \int_{-\infty}^{t_o} \underset{\sim}{h}_k(t,\tau)\, \underline{f}_k(\tau)\, d\tau + \underline{n}'_k(t,t), \tag{45}$$

where the signals $e_k(t)$ are again assumed to be turned on at $t = t$. We can write as a particular case of (29)

$$\underline{\beta}_k(t) = \underset{\sim}{h}_k(t,t_o)\, \underline{\beta}_k(t_o) + \int_{t_o}^{t} \underset{\sim}{h}_k(t,\tau)\, \underline{e}_k(\tau)\, d\tau + \underline{n}'_k(t,t_o). \tag{46}$$

The conditional variance

$$\underset{\sim}{\Phi}_k(t,t_o) \triangleq \langle [\underline{\beta}_k(t) - \underset{\sim}{h}_k(t,t_o)\underline{\beta}(t_o) - \int_{t_o}^{t} \underset{\sim}{h}_k(t,\tau)\underline{e}_k(\tau)\, d\tau]$$

$$\times [\underline{\beta}_k(t) - \underset{\sim}{h}_k(t,t_o)\underline{\beta}_k(t) - \int_{t_o}^{t} \underset{\sim}{h}_k(t,\tau)\underline{e}_k(\tau)\, d\tau]^T \rangle \tag{47}$$

is therefore

$$\underset{\sim}{\Phi}_k(t,t_o) = \langle \underline{n}'_k(t,t_o)\, \underline{n}'_k(t,t_o)^T \rangle. \tag{48}$$

where T denotes the transpose of a matrix

$$(\underset{\sim}{a}^T)_{ij} = (\underset{\sim}{a})_{ji}.$$

If we further define the covariance

$$\underset{\sim}{\phi}_k(t,t') \triangleq \langle [\beta_k(t) - \int_{t_o}^{t} \underset{\sim}{h}_k(t,\tau)\underline{e}_k(\tau)\, d\tau][\underline{\beta}_k(t') - \int_{t_o}^{t} \underset{\sim}{h}_k(t'\tau)\underline{e}_k(\tau)\, d\tau]^T \rangle, \tag{49}$$

we have

$$\underset{\sim}{\phi}_k(t,t') = \underset{\sim}{h}_k(t,t')\, \underset{\sim}{\phi}_k(t',t'), \qquad t > t' \tag{50}$$

$$\underset{\sim}{\Phi}_k(t, t') = \underset{\sim}{\phi}_k(t, t) - \underset{\sim}{h}_k(t, t')\, \underset{\sim}{\phi}_k(t', t')\, \underset{\sim}{h}_k^T(t, t'), \qquad t > t'. \tag{51}$$

It is also convenient to set

$$\langle \underline{f}_k(t) \underline{f}_k^T(t') \rangle = 2 \underset{\sim}{D}_k(t)\, \delta(t-t') \tag{52}$$

with

$$\underset{\sim}{D}_k(t) = \begin{pmatrix} K_1^k(t) & K_2^k(t) \\ K_2^k(t) & K_1^{k*}(t) \end{pmatrix} \tag{53}$$

so that

$$\underset{\sim}{\Phi}_k(t, t') = 2 \int_{t'}^{t} \underset{\sim}{h}_k(t, \tau)\, \underset{\sim}{D}_k(\tau)\, \underset{\sim}{h}_k^T(t, \tau)\, d\tau, \qquad t > t'. \tag{54}$$

We next assume that the system is stable. That is,

$$\lim_{t' \to -\infty} \underset{\sim}{h}_k(t, t') = 0. \tag{55}$$

From (47) and (55) we therefore have

$$\begin{aligned} \underset{\sim}{\phi}_k(t, t) &= \underset{\sim}{\Phi}_k(t, -\infty) \\ &= 2 \int_{-\infty}^{t} \underset{\sim}{h}_k(t, \tau)\, \underset{\sim}{D}_k(\tau)\, \underset{\sim}{h}_k^T(t, \tau)\, d\tau. \end{aligned} \tag{56}$$

As discussed in the general case, we see from (56) that in this Markov case the variance $\underset{\sim}{\phi}_k(t_o, t_o)$ arises from the random force $\underline{f}_k(t)$ for a given $\underset{\sim}{D}_k(t)$. The initial statistics of $\underline{\beta}_k(t)$ can therefore be specified as a Gaussian distribution with zero mean and variance

$$\underset{\sim}{\phi}_k(t_o, t_o) = 2 \int_{-\infty}^{t_o} \underset{\sim}{h}_k(t_o, \tau)\, \underset{\sim}{D}_k(\tau)\, \underset{\sim}{h}_k^T(t_o, \tau)\, d\tau. \tag{57}$$

Now it can be readily shown from Eqs. 51, 52, 45, and 57 that

$$\underset{\sim}{\phi}_k(t, t) = \langle \underline{n}_k(t) \underline{n}_k^T(t) \rangle. \tag{58}$$

Together with (50) this justifies the representation

$$\underline{\beta}_k(t) = \int_{t_o}^{t} \underset{\sim}{h}_k(t, \tau)\, \underline{e}_k(\tau)\, d\tau + \underline{n}_k(t) \tag{59}$$

without further reference to the initial condition $\underline{\beta}_k(t_o)$.

In any case, it is most important to observe that the statistics of the process $\beta_k(t)$ are completely specified by $\underset{\sim}{h}_k(t,\tau)$ and $\underset{\sim}{D}_k(t)$, or equivalently by $\underset{\sim}{h}_k(t,\tau)$ and $\underset{\sim}{\phi}_k(t,t)$. By differentiating (56), we arrive at

$$\frac{d}{dt}\underset{\sim}{\phi}_k(t,t) = 2\underset{\sim}{D}_k(t) - \underset{\sim}{\Lambda}_k(t)\,\underset{\sim}{\phi}_k(t,t) - \underset{\sim}{\phi}_k(t,t)\,\underset{\sim}{\Lambda}_k^T(t) \tag{60}$$

if we write

$$(\underset{\sim}{\lambda}_k + \underset{\sim}{\mathscr{L}}_1)\,\underline{\beta}_k(t) = \left[\underset{\sim}{I}\,\frac{d}{dt} + \underset{\sim}{\Lambda}_k(t)\right]\underline{\beta}_k(t) = 0. \tag{61}$$

Equation 60 is a special case of the well-studied matrix Ricatti equation.[97] We call (50) and (60) the fluctuation-dissipation theorems for the process $\underline{\beta}_k(t)$.

From our viewpoint, the substance of a fluctuation-dissipation theorem is to relate one- and two-time statistics of a process in a simple, convenient, but nontrival way. Such a relation can intuitively be seen to exist for a Markov process (or a component of a Markov process obeying a different equation with white driving noise). If $\underset{\sim}{\Lambda}_k(t)$ or $\underset{\sim}{h}_k(t,\tau)$ is interpreted as dissipative, we understand why the theorem connects dissipation to the fluctuation. Thus given the impulse response $\underset{\sim}{h}_k(t,\tau)$, we only need to know the one-time $\underset{\sim}{\phi}_k(t,t)$ or $\underset{\sim}{D}_k(t)$ to give the two-time covariance $\underset{\sim}{\phi}_k(t,\tau)$ and $\langle \underline{f}_k(t)\,\underline{f}_{k'}^T(t')\rangle$. When the system is time-invariant, in that

$$\underset{\sim}{\Lambda}_k(t) = \underset{\sim}{\Lambda}_k \qquad \text{independent of time}$$

with a stationary driving force

$$\underset{\sim}{D}_k(t) = \underset{\sim}{D}_k \qquad \text{independent of time,}$$

we see from (56) that $\underset{\sim}{\phi}_k(t,t)$ is independent of t and the process $\underline{\beta}_k(t)$ becomes also stationary. The statistics in this equation is even specified by just $\underset{\sim}{h}_k(t-\tau)$ and a constant $\underset{\sim}{D}_k$ or $\underset{\sim}{\Lambda}_k$.

Under our Gaussian assumption the fluctuation-dissipation theorems allow us to specify the complete process by the mean response $\underset{\sim}{h}_k(t,\tau)$ and the one-time behavior $\underset{\sim}{\phi}_k(t,t)$. In our later treatment of quantum-classical system correspondence, the one-time classical behavior will be connected with the quantum behavior system from thermal-noise representations. With fluctuation-dissipation theorems of this nature we shall then have also established a complete correspondence.

Although we can write down the transition probability

$$p_k\left(\beta_k^* \beta_k t \,|\, \beta_k'^* \beta_k' t_o\right)$$

which defines completely the Markov processes, such explicit equations and other

details are omitted here because they can be obtained straightforwardly in case we need them.

State-variable Markov process representations have been used for communication application before.[98-103] In contrast to previous cases, we use Markov processes strictly for channel representations. Furthermore, we attach physical interpretations to these representations as the equations derived from basic laws of physics that govern field transmission.

2.1.3 Stationary Case

It may occasionally be unsatisfactory to use a Markov approximation like the one discussed above. In this case the force $f_k(t)$ cannot be taken to be white at all. In general, there will then be no fluctuation-dissipation theorems for an arbitrary Gaussian process. For the particular case of a stationary system, however, such theorems do exist[104-107, 70] and will be described below.

Let the equation for $\beta_k(t)$ be

$$(\lambda_k + \mathscr{L}_1)\,\beta_k(t) = f_k(t), \tag{62}$$

with

$$\langle f_k(t)\rangle = 0 \tag{63}$$

$$\langle f_k(t)\, f_k(t')\rangle = \delta_{kk'}\, C_k(t-t'). \tag{64}$$

Here we have taken $\beta_k(t)$ to be real, since it is more appropriate to consider directly the electric and magnetic fields in such situations. The driving noise source $f_k(t)$ is stationary, and $\mathscr{L}_1$ is assumed to be time-invariant. We can then write (62) in the Fourier representation

$$\mathscr{L}_k(\omega)\,\beta_k(\omega) = f_k(\omega), \tag{65}$$

where

$$A(\omega) \triangleq \int_{-\infty}^{\infty} e^{i\omega t}\, A(t)\, dt \tag{66}$$

for a process A(t). We also define

$$\langle A(\omega) B^*(\omega)\rangle \triangleq \int_{-\infty}^{\infty} dt\, e^{-i\omega t} \langle A(0) B^*(t)\rangle \tag{67}$$

for any two processes A(t) and B(t).

If we now take $\beta_k(t)$ to be the electric-field amplitude for the kth mode and assume

that the fields are in thermal equilibrium with an environment at temperature T, we have

$$\langle f_k^*(\omega) f_k(\omega)\rangle = \langle f_k(\omega) f_k^*(\omega)\rangle = \frac{2k_B T}{\omega} \mathscr{L}_k^I(\omega) \tag{68}$$

$$\langle \beta_k^*(\omega)\beta_k(\omega)\rangle = \frac{2k_B T}{\omega} \operatorname{Im}\left[-\frac{1}{\mathscr{L}_k(\omega)}\right]. \tag{69}$$

Here k_B is Boltzmann's constant, and $\mathscr{L}_k^I(\omega)$ is the imaginary part of $\mathscr{L}_k(\omega)$,

$$\mathscr{L}_k(\omega) = \mathscr{L}_k^r(\omega) + i\mathscr{L}_k^I(\omega).$$

Thus the correlation of $f_k(t)$ is determined completely by $\lambda_k + \mathscr{L}_1$ and the system temperature T. The interpretation of Eqs. 68 and 69 as a fluctuation-dissipation theorem is obvious.

The utility of such a theorem for our research has already been discussed. In our later quantum treatment we shall further elaborate on the nature of Eqs. 68 and 69 and its application to our problem.

Fluctuation-dissipation theorems for fields in all of our cases can be obtained by combining the results for mode amplitudes in a series expansion. They will be discussed in Section I-D.

Other classes of random processes, for example, martingales,[93] also admit two-time statistical characterization by one-time informations. It is more appropriate, however, to consider the problem from a physical Hamiltonian point of view. Such consideration will be touched upon in discussing quantum development and in Appendix C.

It should again be emphasized, before we leave the differential equation characterization, that our driving noise source is always the thermal noise associated with the system. Other noise is presumably additive to the fields $\psi(\bar{r}, t)$.

2.2 Nondifferential Filter Channels

It is possible that in a given specification of a channel in terms of a space-time filter the system cannot be interpreted as a differential one. We use the terminology "nondifferential filter" to indicate for certainty that a corresponding differential equation does not exist, in contrast to some previous usage.[95] Although realization theories of linear dynamical systems do exist,[108] they do not seem to be directly applicable to our situations. The difficulty is that we do not know, strictly speaking, the order of the differential equation representing our system. In many cases a nondifferential system whose impulse response is a reasonably well-behaved function can be approximated arbitrarily closely, in the sense of zero-state equivalence,[95] by a differential system of sufficiently

high order. Clearly, there exist filters that do not admit of a differential representation. A case of frequent occurrence is the multiplicative situation

$$h(t,\tau) = A(t)\,\delta(t-\tau)$$

or

$$G(\bar{r}t;\bar{r}'\tau) = A(\bar{r}t)\,\delta(t-\tau)\,\delta(\bar{r}-\bar{r}').$$

The noise is then usually specified by an additive component $N(\bar{r},t)$,

$$\psi(\bar{r}t) = \int G(\bar{r}t;\bar{r}'t')\,E(\bar{r}',t')\,d\bar{r}'dt' + N(\bar{r},t) \tag{70}$$

with excitation $E(\bar{r}',t')$. In this case it is more appropriate to consider the channel input and output as related by

$$\psi(\bar{r}t) = A(\bar{r}t)\int G_f(\bar{r}t;\bar{r}'t')\,E(\bar{r}',t')\,d\bar{r}'dt'.$$

That is, the input field after propagation over a space-time filter described by $G_f(\bar{r}t;\bar{r}'t')$ is multiplied at the output by $A(\bar{r},t)$. The question then becomes whether

$$G(\bar{r}t;\bar{r}'t') = A(\bar{r},t)\,G_f(\bar{r}t;\bar{r}'t')$$

can be interpreted as a Green's function of a partial differential equation, if we suppose that $G_f(\bar{r}t;\bar{r}'t')$ can be. Further consideration of this will be given later.

2.3 System Normal and Noise Normal Modes

It is now convenient to introduce the concept of system normal modes and noise normal modes. We refer to the eigenfunctions $\phi_k(\bar{r})$ of $\mathscr{L}_2$ as the system space-normal modes and eigenfunctions $y_n(t)$ of $\mathscr{L}_2$ as the system time-normal modes. The product $\phi_k(\bar{r})\,y_n(t)$ are the space-time normal modes. These system normal modes can be contrasted with the noise normal modes $\phi_k'(\bar{r})$ and $y_n'(t)$. Here the Gaussian noise source is expanded as

$$\mathscr{F}(\bar{r},t) = \sum_{kn} f_{kn}'\,\phi_k(\bar{r})\,y_n'(t) \tag{71}$$

$$= \sum_{k} \phi_k'(\bar{r})\,f_k'(t), \tag{72}$$

where f_{kn} are statistically independent random variables, and $f_k(t)$ are independent random processes. Equations 71 and 72 are Karhunen-Loève type expansions[90] for a Gaussian random field with square-integrable sample functions. This system and noise

normal mode terminology would occasionally be abbreviated as "system" and "noise" modes.

The statistical dynamical problem is completely diagonalized if the system normal modes coincide with the noise normal modes. When they differ the use of system normal modes implies that the noise components for them are not independent, and the use of noise modes implies that these modes are coupled. In case $\mathscr{L}_2$ is dissipative, a white driving noise field $\mathscr{F}(\bar{r}, t)$ expanded in the system normal modes,

$$\mathscr{F}(\bar{r}, t) = \sum_k \phi_k(\bar{r})\, f_k(t),$$

would give rise to statistically dependent $f_k(t)$. If we use noise modes $\phi_k'(\bar{r})$, we would obtain a linear system of coupled differential equations for $\{\beta_k(t)\}$ with independent driving processes $\{f_k'(t)\}$. A particular choice of simplicity can be based on individual problems and individual questions. Our assumption, Eq. 11, permits our system and noise normal modes to be the same even when $\mathscr{F}(\bar{r}, t)$ is white.

The Green's function for the partial differential equation[87-89] Eq. 1 with the condition Eq. 5, the boundary conditions of $\phi_k(\bar{r})$, and vanishing initial conditions can be written in general

$$G(\bar{r}t; \bar{r}'t') = \sum_{nk} \frac{1}{\nu_n + \lambda_k}\, \phi_k(\bar{r})\, \phi_k^*(\bar{r}')\, W_2(\bar{r}')\, y_n(t)\, y_n^*(t')\, W_1(t'), \tag{73}$$

where

$$\mathscr{L}_1 y_n(t) = \nu_n y_n(t) \tag{74}$$

$$\int_{V_1} y_n^*(t) y_{n'}(t) W_1(t)\, dy = \delta_{nn'} \tag{75}$$

$$\sum_n y_n^*(t)\, y_n(t')\, W_1(t') = \delta(t-t'). \tag{76}$$

In this case W_1 is the time interval of the problem, and $W_1(t)$ is generally not unity. The additive noise field

$$F(\bar{r}, t) = \int G(\bar{r}t; \bar{r}'t')\, \mathscr{F}(\bar{r}', t')\, d\bar{r}'\, dt \tag{77}$$

corresponding to a white driving noise source $\mathscr{F}(\bar{r}', t')$ then also possesses normal modes different from $\phi_k(\bar{r})$ and $y_n(t)$ in general.

The discussion on system and noise normal modes that we have just given carries over straightforwardly in the quantum treatment.

2.4 Stochastic Channels

In a nondifferential filter characterization of channels, the filter can be taken as a random process. For example, in the equation

$$X(t) = \int h(t,\tau)\, e(\tau)\, d\tau + n(t) \tag{78}$$

we can specify the two-dimensional process $h(t,\tau)$, and independently the noise process $n(t)$. Such channels have been the subject of much study,[4, 109] and many different useful characterizations are available.[54, 55, 4]

In the case of differential equation representation, we are considering a stochastic differential equation

$$(\mathscr{L}_1 + \mathscr{L}_2)\, \psi(\bar{r}, t) = E(\bar{r}, t) + \mathscr{F}(\bar{r}, t) \tag{79}$$

whose $\mathscr{L}_1$ and $\mathscr{L}_2$ are now linear random operators. The study of such an operator is a relatively difficult subject, and very few analytical results are available.[56-59] Various approximations usually have to be made.

2.4.1 Random Green's Function

For our purpose, it is convenient to introduce, parallel to the nonrandom case, the concept of a random Green's function. By this we mean that under the deterministic boundary condition prescribed previously, the solution $\psi(\bar{r}, t)$ of (79) can be written

$$\psi(\bar{r}, t) = \int_{V_2} \int_{-\infty}^{t} G_k(\bar{r}t; \bar{r}'t') \left[E(\bar{r}'t') + \mathscr{F}(\bar{r}', t')\right] d\bar{r}'dt' \tag{80}$$

for a four-dimensional random field

$$G_R(\bar{r}t; \bar{r}'t') \tag{81}$$

which we call the random or stochastic Green's function of (79). Thus $G_R(\bar{r}t; \bar{r}'t')$ is the inverse of the random operator $\mathscr{L}$. Note that the term stochastic Green's function has been used before with a totally different meaning.[110]

The crux of the statistical problem is then of course the determination of properties of $G_R(\bar{r}t; r''t')$ from (79) under various mathematically specified conditions. Such a task appears to be quite difficult for even a simple equation (79). It is not clear that such an approach to Eq. 79 is the most fruitful one in general. Our discussion of a communication system would be greatly simplified, however, to a level comparable to the nondifferential case, if we had such a random Green's function that might be obtained from various approximations. We shall see immediately that $G_R(\bar{r}t; \bar{r}'t')$ is at least a powerful theoretical tool in our communication system analysis.

Similar to the deterministic case, we have the problem of realizing an integral stochastic channel representation by a stochastic partial differential equation or random Green's function. The difficulty here is more severe; the deterministic case and further approximations will usually be required.

2.4.2 Stochastic Normal Modes

We now assume that a stochastic Green's function of the kind discussed above has been given which specifies the channel output in the absence of other noises for a fixed input signal. To avoid part of the difficulty in connection with stochastic differential equations mentioned above, we can regard as given a random field (81) which is the stochastic Green's function of a certain random differential equation. We are not able to tell whether this can indeed happen for a given $G_R(\bar{r}t; \bar{r}'t')$. For our interest this difficulty should not be too serious.

We can formally expand the random Green's function of (81) in the form

$$G_R(\bar{r}t; \bar{r}'t') = \sum_k \phi_k(\bar{r})\, \phi_k^*(\bar{r}')\, h_k(t, t') \tag{82}$$

for a set of orthonormal functions $\phi_k(\bar{r})$ and a set of random processes $h_k(t, t')$. The expansion (82) is equivalent to the assertion that the possibly random $\mathscr{L}_2$ possesses orthonormal eigenfunctions $\phi_k(\bar{r})$ with random eigenvalues. If $\mathscr{L}_2$ is nonrandom, (82) is clearly valid. The process $h_k(t, t')$ can be expanded as before:

$$h_k(t, t') = \sum_{mn} g_{mn}^k z_m(t)\, y_n(t')\, W_1(t') \tag{83}$$

for functions $y_n(t)$ obeying Eqs. 75 and 76 and random variables $\{g_{mn}^k\}$. The set $\{z_m(t)\}$ is another sequence of orthonormal functions. The stochastic Green's function can then be written in a spectral representation

$$G_R(\bar{r}t; \bar{r}'t') = \sum_{kmn} g_{mn}^k z_m(t)\, y_n(t')\, \phi_k(\bar{r})\, \phi_k^*(\bar{r}')\, W_1(t'). \tag{84}$$

In general $G_R(\bar{r}t; \bar{r}'t')$ can therefore be conveniently specified by the joint distribution of $\{g_{mn}^k\}$.

Let us define the mean and covariance of $h_k(t, t')$ by

$$\overline{h_k(t, \tau)} = \bar{h}_k(t, \tau) \tag{85}$$

$$\overline{\left[h_k^*(t, \tau) - \bar{h}_k^*(t, \tau)\right]\left[h_k(r, s) - \bar{h}_k(r, s)\right]} = C_{h^* h}^k(tr; \tau s) \tag{86}$$

$$\overline{[h_k(t,\tau)-\bar{h}_k(t,\tau)][h_k(r,s)-\bar{h}_k(r,s)]} = C^k_{hh}(tr;\tau s), \tag{87}$$

although higher correlations may also exist in general. We have used the bar to indicate stochastic channel averaging, in distinction to the angular bracket notation for noise averaging. It is frequently possible to set

$$C^k_{h^*h^*}(tr;\tau s) = C^{k*}_{hh}(tr;\tau s) = 0. \tag{88}$$

In such a case the expansion (84) can be taken as a Karhunen-Loève expansion with uncorrelated $\{g^k_{mn}\}$ for different $\{m,n\}$. This possibility is evident if $z_m(t)\, y_n(t')$ is an eigenfunction of the integral equation

$$\int C^k_{h^*h}(tr;\tau s)\, z_m(\tau)\, y_n(s)\, d\tau ds = \alpha^k_{mn} z_m(t)\, y_n(r). \tag{89}$$

If (86) is nonvanishing, it is generally not possible for $\{g^k_{mn}\}$ to be uncorrelated. That is, it is not possible for

$$\langle g^{k*}_{m'n'} g^k_{mn}\rangle = 0 \qquad m \neq m',\ n \neq n'$$

$$\langle g^k_{m'n'} g^k_{mn}\rangle = 0 \qquad m \neq m',\ n \neq n'$$

to hold together, since we are effectively trying to diagonalize two different processes simultaneously.[14] If $h_k(t,t')$ is real, such an expansion would always be possible. We shall refer to such $z_m(t)$ and $y_n(t)$ as the stochastic normal modes, to distinguish from the previous nonrandom system normal modes.

When $h_k(t,\tau)$ or $G_R(\bar{r}t;\bar{r}'t')$ is Gaussian, Eqs. 86 and 87 become a complete specification of the random Green's function. Furthermore, when (88) holds, $\{g^k_{mn}\}$ becomes independently Gaussian random variables with mean

$$\overline{g^k_{mn}}$$

and variances

$$\overline{g^{k*}_{mn} g^k_{mn}} = \alpha^k_{mn}$$

$$\overline{g^k_{mn} g^k_{mn}} = 0.$$

The representation (80) is then in the convenient diversity form

$$\psi(\bar{r},t) = \sum_{kmn} g^k_{mn}\phi_k(\bar{r})\ \bar{z}_m(t) \int y_n(t')\ \phi^*_k(\bar{r}')\ d\bar{r}'dt'\ [E(\bar{r}'t') + \mathscr{F}(\bar{r}',t')] \tag{90}$$

so that the normal modes $z_m(t)$, $y_n(t)$, and $\phi_k(\bar{r})$ truly occupy a central role. It can be straightforwardly shown in this case that the two noise fields

$$\sum_{kmn} \left(g^k_{mn} - \overline{g^k_{mn}}\right) \phi_k(\bar{r})\ z_m(t) \int y_n(t')\ \phi_k(\bar{r}')\ d\bar{r}'dt'\ E(\bar{r}',t')$$

and

$$\sum_{kmn} g^k_{mn}\phi_k(\bar{r})\ z_m(t) \int_{-\infty}^{t} \int_{V_2} y_n(t')\ \phi_k(\bar{r}')\ d\bar{r}'dt'\ \mathscr{F}(\bar{r}',t')$$

are independent. Note that the stochastic channel also filters the noise source field $\mathscr{F}(\bar{r},t)$.

We call a diversity representation of the form (90) with independent $\{g^k_{mn}\}$ a canonical diversity representation, since it diagonalizes the problem for any signal excitation. If available, it is more useful than diversity representations based on specific signal sets[4] as channel representations, for it relates the input and output directly.

In this Gaussian case we shall frequently not need the explicit construction (84) for many applications. Instead a direct characterization of its mean and covariance suffices.

We mention again that our random Green's function would generally be regarded to be specified by (84) with joint distribution on $\{g^k_{mn}\}$.

2.5 Stochastic Signals

Stochastic signals are easily treated in the nondifferential case (69) with either a nonrandom or a stochastic channel. We need only specify the signal process completely, which is always assumed to be independent of the channel and the noise statistics. For example, we can choose to expand

$$E(r,t) = \sum_{kn} e_{kn}\phi_k(\bar{r})\ y_n(t)$$

in a Karhunen-Loève expansion when possible, and then specify the joint statistics of $\{e_{kn}\}$. Other specifications are also possible.

In the case of differential equation representation, $E(\bar{r},t)$ can again be specified in whatever form is convenient. Since it is an independent input excitation field, no special difficulties in its characterization arise as in the stochastic channel case. Furthermore, neither the noise source nor the additive noise field are influenced by the stochastic nature of $E(\bar{r},t)$.

2.6 Relation to Ordinary Filter Description

Usually a communication system is characterized in the black-box form of Fig. 1 for an additive Gaussian noise n(t) and a randomly time-variant linear filter $h_k(t,\tau)$.

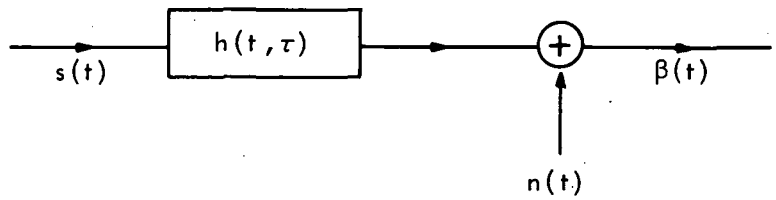

Fig. 1. Randomly time-variant linear filter channel.

This description suppresses the physical aspects of the system. In particular, the space coordinates cannot yet be identified.

A nondifferential distributive description like the one discussed in section 2.2 can be represented in the form of Fig. 2, wherein $G_R(\bar{r}t;\bar{r}'t')$ can also be random.

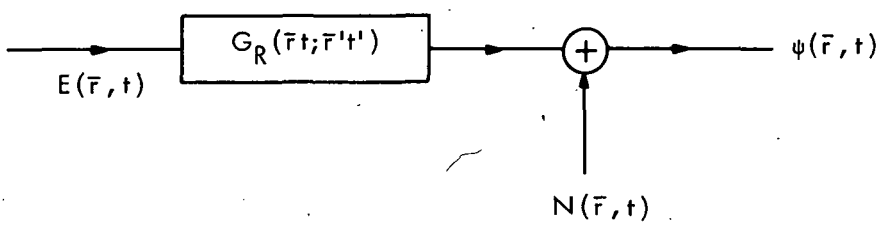

Fig. 2. Randomly time-variant nondifferential linear distributive channel.

This case can still be considered a special case of the following differential system representation if $G_R(rt;\bar{r}'t')$ can be interpreted as the stochastic Green's function of a random differential equation. In this case we have Fig. 3.

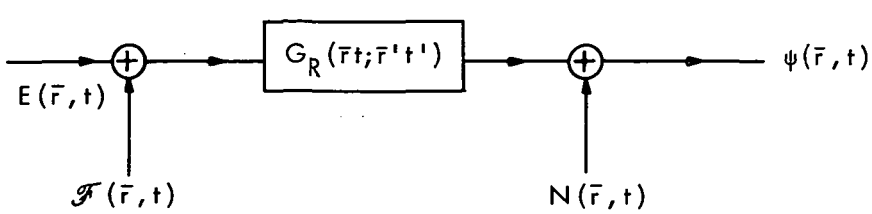

Fig. 3. Randomly time-variant differential linear distributive channel.

In the previous discussions we have only treated the output $\psi(\bar{r}, t)$. A specified additive noise field $N(\bar{r}, t)$ can evidently be introduced with a combined representation

$$\psi'(\bar{r}, t) = \int_{-\infty}^{t} \int_{V_2} G_R(\bar{r}t; \bar{r}'t')\left[E(\bar{r}', t') + \mathscr{F}(\bar{r}', t')\right] d\bar{r}'dt' + N(\bar{r}, t). \tag{91}$$

The initial conditions have been suppressed as explained previously.

It is simple to give the representation of Fig. 1,

$$\beta(t) = \int h(t, \tau)\, s(\tau)\, d\tau + n(t), \tag{92}$$

from the distributive representation (91) when we know that

$$\beta(t) = \int_{V_u} \psi'(\bar{r}, t)\, u(\bar{r})\, d\bar{r}. \tag{93}$$

Such a relation is indeed what usually occurs, say, when we look at a coherence area on the received plane of an optical channel. If in this case the signal s(t) is generated by a point source at $\bar{r} = 0$

$$E(\bar{r}, t) = \delta(t)\, \delta(\bar{r}),$$

we have

$$h(t, \tau) = \int_{-\infty}^{t} \int_{V_u} G(\bar{r}t; \bar{r}'t')\, u(\bar{r})\, d\bar{r}'dt'$$

$$n(t) = \int_{-\infty}^{t} \int_{V_2} \int_{V_u} dt d\bar{r} d\bar{r}'\, G(\bar{r}t; \bar{r}'t')\, u(\bar{r})\, \mathscr{F}(\bar{r}', t') + \int_{V_u} u(\bar{r})\, N(\bar{r}, t)\, d\bar{r}.$$

It is obvious that it is not generally possible to obtain (91) from the representation (92) even if we know that $\beta(t)$ is obtained through $\psi(\bar{r}, t)$ with a given $u(\bar{r})$, as in (93). This should not bother us, since only the representation (91) is a complete specification of the situation under consideration. We shall always regard the classical specification to be given only if each function or process on the right side of (91) is specified. We require such complete specification even when we are ultimately interested only in (92). This is because physical aspects need to be explicitly invoked in the quantum treatment; for example, the nature of the variable $\beta(t)$ is involved.

When a complete specification is given in the form (91) it is clear that we can form still more general communication systems than the one shown in Fig. 1. If we let

$$\alpha_k = \int \psi'(\bar{r}, t')\, \xi_k(\bar{r}, t')\, d\bar{r}dt'$$

for ordinary functions $\{\xi_k(\bar{r}, t)\}$, we can determine the joint distribution of $\{\alpha_k, \alpha_k^*\}$ in

a straightforward fashion. When

$$\xi_k(\bar{r}, t') = u(\bar{r})\, \delta(t-t') \tag{94}$$

we would recover the system (92), in that $\alpha = \beta(t)$. In general, a choice of $\{\alpha_k\}$ reflects to a certain extent the physical receiver structure or configuration.

2.7 Conclusion

We have developed the theory of classical random field propagation in a particular form convenient for translation to quantum treatment. A description of classical communication systems from this framework has also been given. The novel feature in our discussion is that the differential equation channel characterization is quite physical, in that it describes the field transmission in the system of interest and is related rather intimately to a fundamental Hamiltonian treatment. These points will be discussed further in the quantum case.

Another apparently new concept that we have introduced is the notion of a random Green's function which is particularly important when we use a differential equation physical description. When available, it provides complete information on the solutions of a stochastic differential equation. It should be worthwhile to investigate such functions further because they would have applications in many other areas.

Finally, we would like to mention that the description of communication systems by differential equations, together with appropriate physical interpretations, should provide a useful approach to general communication analysis.

C. QUANTUM RANDOM PROCESSES

We shall now develop an operational theory of quantum random processes to a degree sufficient for our future purposes. We shall use the fundamental results established here to obtain quantum-channel representations. Rigorous mathematical discussions of ordinary stochastic processes may be found in many places.[91-94] General mathematical formulations of quantum dynamical theory, with due regard to the statistical nature peculiar to quantum mechanics, also exist in a variety of forms.[5,8,111-122] The most common form is briefly reviewed in Appendix A. There does not exist, to the author's knowledge, any systematic and convenient mathematical theory of random processes applicable to situations in quantum physics, although there are fragmentary works both of a mathematical[116, 117] and of a calculational nature.[69-73] In addition, some probabilistic notions and techniques related to quantum statistical dynamical problems have been used by physicists.[69-73, 118-120] In spite of this, it is highly desirable, at least for applications to communication and other systems, to have a common framework for treating quantum random problems that is comparable in scope to the discussion of classical stochastic problems by ordinary random processes. It is our purpose to sketch a primitive version of such a novel theory.

By a quantum random process we mean a time-dependent linear operator $\underline{\overline{X}}(t)$, which is defined on the state space of the quantum system under consideration and possesses a complete set of eigenstates for every t. A quantum random process, which we often abbreviate as a <u>quantum process</u>, is therefore a quantum observable in the Heisenberg (or H) picture. See Appendix A for more detailed discussion. We shall first discuss time-independent operators and then we treat the time-dependent case.

It is appropriate to emphasize, first, the differences between our present treatment and that of ordinary stochastic processes. In the classical case the system under consideration, composed of functions $f(\underline{\overline{X}})$ of a random variable $\underline{\overline{X}}$, is completely characterized by the distribution function of $\underline{\overline{X}}$ alone. In quantum theory we cannot obtain the distribution of an $f(\underline{\overline{X}})$ from that of $\underline{\overline{X}}$ in the classical manner when $\underline{\overline{X}}$ is non-Hermitian. Complete statistical characterization of a quantum system is given differently, usually through a density operator. The purpose of our development is to establish convenient statistical specifications of a quantum system, while maintaining, as much as possible, the applicability and usefulness of ordinary stochastic concepts and methods. Similarly to the classical case, such concepts and methods make possible the efficient analysis of many quantum statistical problems.

3.1 Quantum Probabilistic Theory

We have to develop some probabilistic concepts applicable to the quantum case before we can start our discussion of quantum processes. Appendix A gives a brief introduction to quantum formalism and to some of the definitions that we use. The essential point of our treatment is to give a c-number description of the quantum observables

under consideration, so that many ordinary stochastic concepts and techniques can be transferred to the quantum domain through this c-number characterization.

3.1.1 Self-adjoint Quantum Variables

We shall consider a set of commuting self-adjoint quantum observables $\{\underline{\overline{X}}_i\}$ of a given quantum system. We are not considering a dynamical situation so that the $\underline{\overline{X}}_i$ are time-independent in any picture.

As explained in Appendix A, the quantum system under consideration is completely specified by its mixed state represented by a density operator ρ. Let $|x_1 \ldots x_i \ldots\rangle$ be the simultaneous eigenvectors of $\{\underline{\overline{X}}_i\}$, with eigenvalues $\{x_i\}$. The results of simultaneous $\underline{\overline{X}}_i$ measurements are therefore distributed with a probability density

$$p(x_1 \ldots x_i \ldots) = \langle x_1 \ldots x_i \ldots | \rho | x_1 \ldots x_i \ldots \rangle. \tag{95}$$

When the eigenvalue set $\{x_i\}$ is degenerate, the distribution is modified to read

$$p(x_1 \ldots x_i \ldots) = \text{tr.}\, \rho P_{\{x_i\}}, \tag{96}$$

where $P_{\{x_i\}}$ is the projection operator for the eigensubspace corresponding to the eigenvalues $\{x_i\}$. We shall often use the term <u>distribution</u> instead of <u>probability density</u> for brevity, a common practice among physicists. No confusion should arise, since we never consider true probability distributions, that is, the integrated probability densities.

As the distribution (95) or (96) is indeed a joint density for $\{x_i\}$, marginal and conditional densities can be defined as usual with corresponding physical interpretations. We shall not pursue such a development here.

It is important to observe that the distribution (95) or (96) does not specify ρ completely in general. If we were interested only in the observables $\underline{\overline{X}}_i$, or functions of them, (95) would provide sufficient information because the off-diagonal elements,

$$\langle x_1 \ldots x_i \ldots | \rho | x'_1 \ldots x'_i \ldots \rangle \qquad x_i \neq x'_i,$$

would not then play a role in the problems of interest. In this case the system density operator can then be considered to be effectively diagonal in the $|x_1 \ldots x_i \ldots\rangle$ representation. The quantum statistical problem becomes a completely classical one, given the distribution of (95).

3.1.2 Non-Hermitian Quantum Observables

Our interest in this work concentrates on systems whose observables are functions of b_i, $b_i^\dagger$, where for each i, b_i and $b_i^\dagger$ are the photon annihilation and creation operators. Our attention hereafter will be directed only toward such sets of operators.

Let us first consider the case where we have only one set $b, b^\dagger$, with

$$[b, b^\dagger] = 1. \tag{97}$$

A brief discussion of these boson operators is given in Appendix A. If we write

$$b = \frac{b + b^\dagger}{2} + i\left(\frac{b - b^\dagger}{2i}\right) = b_1 + ib_2 \tag{98}$$

for self-adjoint operators b_1 and b_2, we see that

$$[b_1, b_2] = \frac{i}{2}.$$

Thus we have a situation in which the system observables of interest are functions of non-Hermitian operators b and $b^\dagger$ or of two noncommuting self-adjoint operators b_1 and b_2 – a case different from that of the previous section.

The operator $b^\dagger$ has no eigenvectors except the null state.[121] In contrast, b has an overcomplete[122] set of eigenstates $|\beta\rangle$ with complex eigenvalues β.[119-121]

$$b|\beta\rangle = \beta|\beta\rangle \tag{99a}$$

$$\int \frac{d^2\beta}{\pi} |\beta\rangle\langle\beta| = I \tag{99b}$$

$$d^2\beta = d(\mathrm{Re}\,\beta)\, d(\mathrm{Im}\,\beta). \tag{99c}$$

These coherent states $|\beta\rangle$ are nonorthogonal[119, 123]

$$\langle\beta|\beta'\rangle = \exp\{\beta^*\beta' - \tfrac{1}{2}|\beta|^2 - \tfrac{1}{2}|\beta'|^2\} \tag{100a}$$

but properly normalized

$$\langle\beta|\beta\rangle = 1. \tag{100b}$$

Arbitrary functions of b and $b^\dagger$, the observables of interest to us, can be written in different operator orders.[74, 124] A function $f(b, b^\dagger)$ is said to be in normal order if every b stands to the right of every $b^\dagger$. We write[74]

$$f(b, b^\dagger) = f^{(n)}(b, b^\dagger) \tag{101a}$$

to indicate that an observable has been written in normal order. If we now replace b and $b^\dagger$ in $f^{(n)}(b, b^\dagger)$ with β and β^*, two c-number complex variables, we have an ordinary function of two complex variables

$$\bar{f}^{(n)}(\beta, \beta^*) \tag{101b}$$

where the bar on $\bar{f}$ reminds us that $\bar{f}$ is a c-number function. The variables β and β^* will be called the <u>associated classical amplitudes</u> of b and $b^\dagger$, and $\bar{f}^{(n)}(\beta, \beta^*)$ will be called the <u>associated classical function</u> of $f^{(n)}(b, b^\dagger)$.[125] Given (101b), we can clearly recover (101a) merely by replacing (β, β^*) with $(b, b^\dagger)$ and write the resulting function in normal order. This correspondence between normally ordered operators and their associated classical function can be expressed[74, 125] as

$$f^{(n)}(b, b^\dagger) = n\{\bar{f}^{(n)}(\beta, \beta^*)\} \tag{101c}$$

with the introduction of a normal ordering operation n.

Similarly, we define a function $f(b, b^\dagger)$ as in antinormal order

$$f(b, b^\dagger) = f^{(a)}(b, b^\dagger) \tag{101d}$$

when each $b^\dagger$ stands to the right of every b. Analogous associated amplitudes and associated classical functions can be introduced so that

$$f^{(a)}(b, b^\dagger) = \mathscr{A}\{\bar{f}^{(a)}(\beta, \beta^*)\}$$

for an antinormal ordering operation $\mathscr{A}$. Further discussions of operator orderings may be found.[74, 124, 125]

It has been suggested[119, 126-128] that for a broad class of functions $f(b, b^\dagger)$, we can expand

$$f(b, b^\dagger) = \int \bar{f}^{(a)}(\beta, \beta^*) |\beta\rangle \langle\beta| \frac{d^2\beta}{\pi}. \tag{101e}$$

The precise conditions of validity for (101d), a subject of much discussion and controversy,[120, 121, 119] need not concern us here. In all of our applications its validity can be established.

Applying (101e) to the system density operator ρ yields

$$\rho = \int P(\beta, \beta^*) |\beta\rangle \langle\beta| \, d^2\beta, \tag{102a}$$

where the function $P(\beta, \beta^*)$

$$P(\beta, \beta^*) = \frac{1}{\pi} \bar{\rho}^{(a)}(\beta, \beta^*) \tag{102b}$$

is commonly called the P-representation[119] of ρ. The possibility of such a diagonal expansion of ρ rests on the overcompleteness of the eigenstates $|\beta\rangle$. Note that ρ is not actually diagonal in the $|\beta\rangle$-representation because

$$\langle\beta|\rho|\beta'\rangle = 0 \qquad \beta \neq \beta'$$

implies[121] that $\rho = 0$.

Because all observables of the system are functions of b and $b^\dagger$, we can evaluate averages of $f^{(n)}(b, b^\dagger)$ with the representation (102a) in the form[119, 127]

$$\langle f(b, b^\dagger)\rangle = \langle f^{(n)}(b, b^\dagger)\rangle = \mathrm{tr.}\ \rho^{(a)} f^{(n)}(b, b^\dagger)$$
$$= \int P(\beta, \beta^*)\, \bar{f}^{(n)}(\beta, \beta^*)\, d^2\beta. \tag{103a}$$

Similarly, we have[125]

$$\langle f(b, b^\dagger)\rangle = \langle f^{(a)}(b, b^\dagger)\rangle = \mathrm{tr.}\ \rho^{(n)} f^{(a)}(b, b^\dagger)$$
$$= \int \rho(\beta, \beta^*)\, \bar{f}^{(a)}(\beta, \beta^*)\, \frac{d^2\beta}{\pi}, \tag{103b}$$

where

$$\rho(\beta, \beta^*) \triangleq \langle \beta | \rho | \beta \rangle \tag{103c}$$

are the diagonal elements of ρ in the coherent representation $|\beta\rangle$.

3.1.3 Quasi Densities and Characteristic Functions

The expression (103c) has been shown[39] (see also Appendix E) to be the probability density describing the outcome β of quantum measurements of b. Of course (103c) then possesses all of the usual properties of a probability density. Also, it is an analytic function of two complex variables β and β^*, and, therefore, is a very well-behaved function.[121] For the same reason, ρ is also completely specified by $\rho(\beta, \beta^*)$.

In contrast, the P-representation (102b) is not an ordinary probability density. It can become negative and quite singular, involving an infinite sum of arbitrarily high-order derivatives of the delta function.[127, 120] The general usefulness of $P(\beta, \beta^*)$ rests on the fact that normally ordered averages can be computed in a classical fashion (103a), as if $P(\beta, \beta^*)$ were a probability density. Furthermore, the density operation ρ is also completely specified by $P(\beta, \beta^*)$, as is evident from (102a). In our later applications $P(\beta, \beta^*)$ will usually be positive and nonsingular, obeying many mathematical properties of a density function. It is still not interpretable, however, as a distribution describing outcome probabilities of certain quantum measurements.

Our purpose is to find c-number variables (β, β^*) with corresponding given 'quasi-density' functions such that all quantum information of the system under consideration can be obtained. We are therefore asking for a convenient c-number characterization of the quantum system so that the classical stochastic concepts and methods may be carried over.

We refer to $\rho(\beta, \beta^*)$ and $P(\beta, \beta^*)$ as quasi densities because their role in many

applications is similar to that of probability densities in ordinary random problems. The c-number variables (β, β^*) are called quasi-random variables or quasi variables accordingly. Note, in fact, that $\rho(\beta, \beta^*)$ is a true density. It is convenient to lump it with $P(\beta, \beta^*)$ for our purposes.

To emphasize that the density operator ρ is really needed to describe outcome distributions for measurements of $f(b, b^\dagger)$, we observe that we cannot calculate the distribution of, say, $b^\dagger b$ from that of $\rho(\beta, \beta^*)$ by making a classical random variable transformation. This is an intrinsic quantum property that distinguishes quantum and classical statistical elements.

Since averages of $f(b, b^\dagger)$ can be calculated by different kinds of orderings of b and $b^\dagger$ as in Eqs. 103a and 103b, we find it convenient to define several characteristic functions.[120] Specifically,

$$\phi_N(\mu, \mu^*) \triangleq \text{tr.} \{\rho\, e^{\mu b^\dagger} e^{-\mu^* b}\} \tag{104}$$

$$\phi_A(\mu, \mu^*) \triangleq \text{tr.} \{\rho\, e^{-\mu^* b} e^{\mu b^\dagger}\}. \tag{105}$$

Here $\phi_N(\mu, \mu^*)$ and $\phi_A(\mu, \mu^*)$ are called normal and antinormal ordered characteristic functions, respectively. They are Fourier transforms of $P(\beta, \beta^*)$ and $\rho(\beta, \beta^*)$

$$\phi_N(\mu, \mu^*) = \int e^{\mu\beta^* - \mu^*\beta} P(\beta, \beta^*)\, d^2\beta \tag{106}$$

$$\phi_A(\mu, \mu^*) = \frac{1}{\pi} \int e^{\mu\beta^* - \mu^*\beta} \rho(\beta, \beta^*)\, d^2\beta. \tag{107}$$

Their interpretation as characteristic functions is obvious because normally and antinormally ordered averages are computed from them in the usual way that averages are computed from characteristic functions.

We can also define the symmetrically ordered characteristic function[120]

$$\phi_s(\mu, \mu^*) \triangleq \text{tr.} \{\rho\, e^{\mu b^\dagger - \mu^* b}\} \tag{108}$$

whose Fourier transform

$$W(\beta, \beta^*) = \int e^{\mu^*\beta - \beta^*\mu} \phi_s(\mu, \mu^*) \frac{d^2\mu}{\pi} \tag{109}$$

is the Wigner distribution.[120] We shall also call $W(\beta, \beta^*)$ a quasi density. These quasi densities (102b), (103c), (109) and their corresponding characteristic functions (104), (105), and (108) are essential tools here. Note that the characteristic functions are in 1:1 correspondence with their corresponding quasi densities, which are again in

1:1 correspondence with the system density operator ρ. In spite of the fact that the quasi densities are not generally interpretable as true probability densities with proper underlying spaces, it is important to emphasize again that they can be used to compute various operator-ordered quantum averages.

The characteristic functions are related by

$$\phi_N(\mu, \mu^*) = e^{1/2|\mu|^2} \phi_S(\mu, \mu^*) = e^{|\mu|^2} \phi_A(\mu, \mu^*). \tag{110}$$

The quasi densities can be related through (110); for example,

$$\rho(\beta, \beta^*) = \int e^{-|\beta-\beta'|^2} P(\beta, \beta^*)\, d^2\beta \tag{111}$$

and so forth.

Before we turn to further specific development let us mention that different operator orderings and their corresponding quasi densities can be introduced for operators that are linear combinations of b and $b^\dagger$, for example, the usual conjugate variables q and p. We shall not pursue a detailed discussion here, since it should be clear how such a development can be carried out.

3.1.4 Gaussian Quasi Variables

We now define a quantum system and its density operator to be Gaussian when $P(\beta, \beta^*)$ is Gaussian in (β, β^*), i.e.,

$$P(\beta, \beta^*) = \frac{1}{2\pi\sigma^*\sigma\sqrt{1-r^2}} \exp\left\{-\frac{1}{2(1-r^2)}\left(\frac{(\beta^*-\beta_o^*)^2}{\sigma^{*2}} - \frac{2r}{\sigma^*\sigma}|\beta-\beta_o|^2 + \frac{(\beta-\beta_o)^2}{\sigma^2}\right)\right\} \tag{112}$$

with

$$\int d^2\beta\, P(\beta, \beta^*) = 1. \tag{113}$$

The observable b in such a case will be referred to as a Gaussian observable. From Eq. (111) we have, for a Gaussian system,

$$\rho(\beta, \beta^*) = \frac{1}{2\sigma^*\sigma\sqrt{1-r'^2}} \exp\left\{-\frac{1}{2(1-r'^2)}\left(\frac{(\beta^*-\beta_o^*)^2}{\sigma^{*2}} - \frac{2r'}{\sigma^*\sigma}|\beta-\beta_o|^2 + \frac{(\beta-\beta_o)^2}{\sigma^2}\right)\right\} \tag{114}$$

with

$$r' = r + \frac{1}{\sigma^*\sigma}. \tag{115}$$

By standard techniques of operator algebra[74] the density operator is therefore of the form

$$\rho = n\rho(\beta, \beta^*) = N \exp\left\{\frac{b^{\dagger 2}}{2(1-r'^2)\,\sigma^{*2}} + \frac{b^\dagger}{(1-r'^2)}\left(\frac{r'\beta_o}{\sigma^*\sigma} - \frac{\beta_o^*}{\sigma^{*2}}\right)\right\}$$

$$\cdot \exp\left\{\ln\left(1 - \frac{r'}{(1-r'^2)\sigma^*\sigma}\right) b^\dagger b\right\} \exp\left\{\frac{b^2}{2(1-r'^2)\,\sigma^2} + \frac{b}{(1-r'^2)}\left(\frac{r'\beta_o^*}{\sigma^*\sigma} - \frac{\beta_o}{\sigma^2}\right)\right\}, \tag{116}$$

where N is a normalization constant. This density operator cannot be brought into a single exponential, except in the obvious special case when $\sigma^* = \sigma = 0$.

It should be clear from our definition that if b and $b^\dagger$ is a pair of Gaussian observables, then any linear combination of them will also give rise to Gaussian quasi densities.

An important property of our Gaussian system lies in the following theorem.

Theorem 1

When a photon system described by $(b, b^\dagger)$ is Gaussian in the sense of (112), the third and higher order cumulants defined in any order are all vanishing.

The validity of this result rests directly on the c-number commutation rule for $[b, b^\dagger]$. To prove the theorem, we need only observe that from (112) and (97) the quasi densities (102b), (103c), (109) and the characteristic functions (104), (105), and (108) are all Gaussian in their respective variables. The higher cumulants[61] or linked moments[64] of various operator orders are therefore all zero, as in the ordinary Gaussian case. Furthermore, it can be seen that we can define our Gaussian system with any one of the quasi densities or characteristic functions, since Gaussian properties of all others follow immediately in each case. Note that the explicit Gaussian form of $\rho(\beta, \beta^*)$ has been given in Eq. 114.

We wish to characterize our quantum system completely by the c-numbers (β, β^*), which we call quasi variables in analogy with ordinary random variables. As we have said, this is possible because given a Gaussian density of (β, β^*), we can write down the system density operator ρ. We have just seen that we can give simple descriptions of these quasi variables by discussing quasi densities like ordinary distributions. Thus the usefulness of our Gaussian definition stems from the fact that the resulting quasi densities and characteristic functions are easy to deal with as in the classical Gaussian case. Only a few parameters are required for their specification.

It is important to observe that under our Gaussian definition the distribution $P(\beta, \beta^*)$ is positive for all (β, β^*) and is also a smooth function. It can then be seen that many ordinary stochastic concepts can be introduced because all of the quasi densities possess mathematical properties like strict probability densities.

Let us now generalize the above development to the many-variable case. We consider a set of observables $\{b_k, b_k^\dagger\}$ in a total system with subsystems denoted by $\mathcal{S}_k$. We assume that the observables of subsystem $\mathcal{S}_k$ are functions of b_k and $b_k^\dagger$ only and that each b_k is a photon annihilation operator

$$\left[b_k, b_k^\dagger\right] = 1 \tag{117}$$

$$\int \frac{d^2\beta_k}{\pi} |\beta_k\rangle \langle\beta_k| = I_k. \tag{118}$$

The commutators

$$[b_k, b_{k'}] = 0 \qquad \forall\ k, k' \tag{119}$$

and

$$\left[b_k, b_{k'}^\dagger\right] \qquad k \neq k' \tag{120}$$

are further taken to be given c-numbers.

We define the set $\{b_k, b_k^\dagger\}$ to be jointly Gaussian with corresponding quasi variables $\{\beta_k, \beta_k^*\}$ when the P-distribution $P(\underline{\beta}, \beta^*)$ for the total system operator

$$\rho = \int P(\underline{\beta}, \underline{\beta}^*) |\underline{\beta}\rangle \langle\underline{\beta}| \prod_k d^2\beta_k \tag{121}$$

is Gaussian in $\{\underline{\beta}, \underline{\beta}^*\}$. We have used the notation $\underline{\beta}$ to denote the set $\{\beta_k\}$ and

$$|\underline{\beta}\rangle \triangleq |\beta_1 \ldots \beta_k \ldots\rangle \tag{122}$$

represents the eigenstates of

$$b_1 \ldots b_k \ldots |\beta_1 \ldots \beta_k \ldots\rangle = \beta_1 \ldots \beta_k \ldots |\beta_1 \ldots \beta_k \ldots\rangle. \tag{123}$$

The P-distribution in (121) can be used to compute normal-order averages, that is, averages of operators where all the b_k stand to the right of all the $b_k^\dagger$. By the c-number character of Eqs. 119 and 120, various subsystem and operator-ordered characteristic functions and quasi densities are all Gaussian, so that various higher order cumulants vanish. Our situation here is completely analogous to the single subsystem case.

While we shall not write down the explicit form of $P(\underline{\beta}, \underline{\beta}^*)$, it is appropriate to note that it is completely specified by the mean

$$\bar{b}_k^* = \langle b_k^\dagger\rangle; \qquad \bar{b}_k = \langle b_k\rangle \tag{124}$$

and the covariances

$$\left\langle \left(b_k^\dagger - \bar{b}_k^*\right)(b_k - \bar{b}_{k'})\right\rangle \tag{125}$$

$$\langle (b_{k'} - \bar{b}_{k'})(b_k - \bar{b}_k)\rangle = \langle (b_k - \bar{b}_k)(b_{k'} - \bar{b}_{k'})\rangle = \left\langle \left(b_k^\dagger - \bar{b}_k^*\right)\left(b_k^\dagger - \bar{b}_{k'}^*\right)\right\rangle^* \tag{126}$$

for an arbitrarily chosen ordering among the k's. Together with (119) and (120), we can obtain all of the other subsystem operator-ordered quasi densities and characteristic functions. To show how one can write down a characteristic function, we have the following normal-ordered characterization function corresponding to $P(\underline{\beta}, \underline{\beta}^*)$ of

$$\phi_N(\underline{\mu}, \underline{\mu}^*) = \text{tr.} \left\{ \rho \prod_k e^{\mu_k b_k^\dagger} \prod_k e^{-\mu_k^* b_k} \right\}, \tag{127}$$

where

$$\underline{\mu} = \{\mu_k\}.$$

It is intuitively clear that our joint quasi densities have the usual properties of jointly Gaussian distributions. Defining the marginal quasi densities for a subset of $\{b_k, b_k^\dagger\}$ in a manner analogous to the ordinary case as, for example,

$$P\left(\beta_1\beta_1^*;\beta_2\beta_2^*\right) = \int P(\underline{\beta}, \underline{\beta}^*) \prod_{k>2} d^2\beta_k,$$

we can state the following theorem.

Theorem 2

If $\{b_k, b_k^\dagger\}$ are jointly Gaussian, then any subset of them is also jointly Gaussian. If $\{a_k, a_k^\dagger\}$ are obtained from linear transformations of $\{b_k, b_k^\dagger\}$, then $\{a_k, a_k^\dagger\}$ are also jointly Gaussian.

This theorem can be proved in exactly the same way as the classical results are proved, since the proof depends only on the form of the quasi-density functions. Furthermore, any one of the subsystem operator-ordered quasi densities can be used, as they are all Gaussian.

3.1.5 Statistically Independent Quasi Variables

To continue our development of the properties of jointly Gaussian quasi densities, we first define the important notion of statistical independence of quasi variables. While it is possible to define conditional quasi densities, we choose directly our fundamental definition of complete statistical independence between subsystems $\mathcal{A}_k$ to be the factorization of the total system density operator

$$\rho = \rho_1 \otimes \rho_2 \otimes \cdots \otimes \rho_k \cdots \tag{128}$$

into a direct product of subsystem density operators.

With this definition we see that

$$\left\langle Q_1\left(b_1, b_1^\dagger\right) \ldots Q_k\left(b_k, b_k^\dagger\right) \ldots \right\rangle = \left\langle Q_1\left(b_1, b_1^\dagger\right)\right\rangle \ldots \left\langle Q_k\left(b_k, b_k^\dagger\right)\right\rangle, \tag{129}$$

where Q_k is an arbitrary observable of subsystem $\mathcal{S}_k$. Also we have

$$\left[b_k, b_{k'}\right] = \left[b_k, b_{k'}^\dagger\right] = 0, \qquad k \neq k'$$

because (128) implies that the b_k are defined on different Hilbert spaces.

We may state now the following theorem.

Theorem 3

The jointly Gaussian $\{b_k, b_k^\dagger\}$ are independent if and only if (119) and (120) and (125) and (126) are zero for $k \neq k'$.

To prove this in the two-subsystem case, we note that with (129), (119), and (120) we can write

$$\langle \beta_1\beta_2 | \rho | \beta_1\beta_2 \rangle = \langle \beta_1 | \langle \beta_2 | \rho_1 \otimes \rho_2 | \beta_1 \rangle | \beta_2 \rangle$$

$$= \langle \beta_1 | \rho_1 | \beta_1 \rangle \langle \beta_2 | \rho_2 | \beta_2 \rangle$$

so that the covariances are zero. The argument can be reversed to show the converse statement. Generalization to the multivariable situation is clearly straightforward. It can be seen from Theorems 1-3 that the Gaussian quasi variables $\{\beta_k, \beta_k^*\}$ have many properties of ordinary Gaussian random variables.

It is also fruitful to define normal-order statistical independence by the factorization of the P-distribution. For example, in the two-subsystem case

$$P\left(\beta_1\beta_1^*, \beta_2\beta_2^*\right) = P\left(\beta_1, \beta_1^*\right) P\left(\beta_2, \beta_2^*\right). \tag{130}$$

In this situation the normal-ordered averages will factorize

$$\left\langle Q^{(n)}\left(b_1, b_1^\dagger; b_2, b_2^\dagger\right)\right\rangle = \left\langle Q_1^{(n)}\left(b_1, b_1^\dagger\right)\right\rangle \left\langle Q_2^{(n)}\left(b_2, b_2^\dagger\right)\right\rangle, \tag{131}$$

but the antinormal ones may not. The difference between (128) and (130) is that in the latter case the commutator

$$\left[b_k, b_{k'}^\dagger\right] \qquad k \neq k'$$

may not vanish. It is again obvious that jointly Gaussian $\{b_k, b_k^\dagger\}$ are normal-order independent if and only if (125) and (126) are zero for $k \neq k'$. Henceforth, the word

'independent' will imply complete independence, whereas normal-order independence will be given in full terms.

3.1.6 Sums of Independent Quasi Variables

We now consider two statistically independent subsystems $\mathcal{S}_1$ and $\mathcal{S}_2$ with a total density operator ρ. Each subsystem contains observables that are functions of $\{b_k, b_k^\dagger\}$, $k = 1, 2$, which we allow to possess commutator $\left[b_k, b_k^\dagger\right]$, which are merely c-numbers that need not be unity. Equation 119, of course, holds in this case. We introduce the operator

$$b = b_1 + b_2 \tag{132}$$

and consider the quantum system whose observables are functions of b and $b^\dagger$. We call this system the 'sum system.' The quantum-state space of this sum system is constructed in the following way. Let

$$|\beta\rangle = |\beta_1\rangle \otimes |\beta_2\rangle \tag{133}$$

be the eigenstates of b. Here $|\beta_1\rangle$ and $|\beta_2\rangle$ are eigenstates of b_1 and b_2, but they are not necessarily complete in the systems $\mathcal{S}_1$ and $\mathcal{S}_2$. The eigenvalues β of b are

$$\beta = \beta_1 + \beta_2, \tag{134}$$

where β_1 and β_2 are eigenvalues of b_1 and b_2. There is in general an infinite set of eigenvectors $|\beta\rangle$ with the same eigenvalues β. For our purpose, all of the eigenvectors $|\beta_1\rangle \otimes |\beta_2\rangle$ associated with a given $|\beta\rangle$ are equivalent, so that we can pick any one of them. The state space of our sum system is then the space spanned by the chosen $|\beta\rangle$. Clearly, the sum system is not the total system $\mathcal{S}_1 + \mathcal{S}_2$.

Let us assume that the b of (132) obeys $[b, b^\dagger] = 1$. Furthermore, the eigenstates of b chosen in the manner above is clearly complete in the sum system. It is then meaningful to state the following theorem.

<u>Theorem</u> 4

The density operator ρ_s of the sum system can be represented by a P-distribution which is the Fourier transform of

$$\phi_{Nb}(\mu, \mu^*) = \left\langle e^{\mu b_1^\dagger} e^{-\mu^* b_1} \right\rangle \left\langle e^{\mu b_2^\dagger} e^{-\mu^* b_2} \right\rangle . \tag{135}$$

To prove this statement, we observe that by statistical independence

$$\text{tr. } \rho\, e^{\mu\left(b_1^\dagger + b_2^\dagger\right)} e^{-\mu^*(b_1+b_2)} = \text{tr.}\left(\rho_1 e^{\mu b_1^\dagger} e^{-\mu^* b_1}\right) \text{tr.}\left(\rho_2 e^{\mu b_2^\dagger} e^{-\mu^* b_2}\right). \tag{136}$$

Furthermore,

$$\text{tr.}\ \rho\, e^{\mu\left(b_1^\dagger+b_2^\dagger\right)}\, e^{-\mu^*(b_1+b_2)} = \text{tr.}\ \rho_s\, e^{\mu b^\dagger}\, e^{-\mu^* b} \triangleq \phi_{Nb}(\mu, \mu^*).$$

Since the state $|\beta\rangle$ is complete in our sum system, the Fourier transform of (136) is the P-representation of the density operators ρ_s. A more complete discussion is given in Appendix G.

Let us define

$$\phi_{Nb}(\mu, \mu^*) \triangleq \int e^{\mu\beta^*-\beta\mu^*}\, P_b'(\beta, \beta^*)\, d^2\beta \tag{137}$$

$$\left\langle e^{\mu b_1^\dagger}\, e^{-\mu^* b_1}\right\rangle \triangleq \int e^{\mu\beta^*-\mu^*\beta}\, P_1'(\beta, \beta^*)\, d^2\beta \tag{138}$$

$$\left\langle e^{\mu b_2^\dagger}\, e^{-\mu^* b_2}\right\rangle \triangleq \int e^{\mu\beta^*-\mu^*\beta}\, P_2'(\beta, \beta^*)\, d^2\beta. \tag{139}$$

We have the usual convolution formula

$$P_b'(\beta, \beta^*) = \int P_1'(\beta-\beta', \beta^*-\beta'^*)\, P_2'(\beta', \beta'^*)\, d^2\beta. \tag{140}$$

This formula has been derived heuristically[119] when $P_1'(\beta, \beta^*)$ and $P_2'(\beta, \beta^*)$ are both the P-representations of ρ_1 and ρ_2, the subsystem density operators of (128). Our development shows that $P_b'(\beta, \beta^*)$ cannot then be interpreted without proper scaling as the P-function of ρ_s because in such a case $[b, b^\dagger] = 2$. Thus when the commutator $[b, b^\dagger]$, and also

$$\left[b_1, b_1^\dagger\right], \left[b_2, b_2^\dagger\right] \tag{141}$$

are arbitrary c-numbers, our formula (135), (136), and (140) still retains its validity, although none of $P_b'(\beta, \beta^*)$, $P_1'(\beta, \beta^*)$, and $P_2'(\beta, \beta^*)$ may be interpreted as a P-representation.

It is easy to see from the c-number character of the commutator involved that other ordered characteristic functions also factorize. This is also evident from (128), as a consequence of statistical independence. Therefore the other quasi densities for the sum system can be obtained by convolving the corresponding Fourier transforms of the subsystem characteristic functions. Formulas like (140) are then not special to the P-representation, but hold for other quasi densities. Since each of the quasi densities represents the sum system uniquely, we can use any one for convenience.

In the case when Eq. 97 holds, it can be seen from the same argument that the commutators (141) are not important for the representation of ρ_s as long as their sum is unity. In general we have the following theorem.

Theorem 5

Consider a sum of N independent subsystems with

$$b = b_1 + b_2 + \ldots\ldots + b_N \tag{142}$$

and

$$[b, b^\dagger] = 1.$$

The P-distribution of ρ_s is then obtained by convolving successively

$$P_i'(\beta, \beta^*) = \int e^{\beta\mu^* - \mu^*\beta} \phi_{Nb_i}(\mu, \mu^*) \frac{d^2\mu}{\pi^2}, \tag{143}$$

where for given

$$\phi_{Nb_i}(\mu, \mu^*) \triangleq \left\langle e^{\mu b_i^\dagger} e^{-\mu^* b_i} \right\rangle, \tag{144}$$

the resulting $P_b(\beta, \beta^*)$ is independent of the distribution of the c-number commutators

$$\left[b_i, b_i^\dagger\right] = C_i. \tag{145}$$

Thus it is easy to consider a classical subsystem with $\left[b_\ell, b_\ell^\dagger\right] = 0$ added to other quantum subsystems. It can now be seen that factorization of characteristic functions is the more fundamental formula for summing statistically independent quasi variables.

In the case of normal-order statistical independence our development is valid when restricted to normal-order averages and characteristic functions. In this case the convolution of the form (140) still holds, but now the other quasi densities cannot be convolved in the same manner. Normalization of the commutator is again required.

3.2 Quantum Stochastic Processes

We now turn our attention to stochastic processes. As we have mentioned, by a quantum stochastic process we mean a time-dependent observable in the H-picture.

3.2.1 Fundamental Characterization

Since our quantum process is a dynamical variable, it will generally be characterized by the statistical dynamical equation it obeys, together with the initial system

density operator. Since such information is not generally available, we may want to seek other convenient characterizations.

Let us consider the photon operator b(t) with

$$[b(t), b^{\dagger}(t)] = 1 \tag{146}$$

and the quantum system composed of observables that are functions of $\{b(t), b^{\dagger}(t)\}$. In such a case the equation of motion for b(t) or the equation of motion for $\rho(t)$, the system density operator, gives the complete specification of the system behavior. It is more convenient to use b(t) for a general characterization because we can then readily obtain other density operators.

A general abstract characterization of b(t) can be given in terms of the multi-time quasi-density functions.[70]

$$P\left(\beta_n \beta_n^* t_n; \ldots \beta_1^* \beta_1^* t_1\right) \triangleq \left\langle \delta\left(\beta_1^* - b^{\dagger}(t_1)\right) \ldots \delta\left(\beta_n^* - b^{\dagger}(t_n)\right) \delta(\beta_n - b(t_n)) \ldots \delta(\beta_1 - b(t_1)) \right\rangle, \tag{147}$$

where the average is with respect to an initial system density operator $\rho(o)$ and

$$\delta(\beta^* - b^{\dagger})\ \delta(\beta - b)$$

is defined by[70]

$$M(b, b^{\dagger}) = n\{\overline{M}^{(n)}(\beta, \beta^*)\}$$

$$= \int \overline{M}^{(n)}(\beta, \beta^*)\ \delta(\beta^* - b^{\dagger})\ \delta(\beta - b)\ d^2\beta. \tag{148}$$

Other sequences of such delta operators are defined similarly. For a complete specification of b(t), we need to know (147) for any time sequence $\{t_i;\ i = 1, \ldots n\}$, and to know the commutation rules $[b(t), b(t')]$,

$$[b(t), b^{\dagger}(t')] \qquad t = t' \tag{149}$$

which are taken to be c-numbers. We shall assume that

$$[b(t), b(t')] = 0. \tag{150}$$

The multi-time P-distribution (147) can be written as the Fourier transform of a multi-time characteristic function, in case we do not like delta operators.[70, 71] Furthermore, it can be interpreted as the P-representation of a density operator describing measurement output probabilities of observables which are functions of

$$b(t_1), \ \ldots\ldots, \ b(t_n).$$

The specification of a general quantum process is at least as complicated as the

specification of a classical random process. We shall examine certain special cases for which a complete specification can be given in a relatively simple manner.

3.2.2 Gaussian Quasi Processes

We consider the pair of photon operators $\{b(t), b^\dagger(t)\}$ obeying (146). Their associated classical functions $\{\beta(t), \beta^*(t)\}$ will be called a quasi process. We define a quasi process to be Gaussian when its multi-time P-function (147) is a Gaussian in the variable $\{\beta(t_i), \beta^*(t_i) | i = 1, \ldots, n\}$ for every n. From the c-number property of (149) and (150) different quasi densities with any time order are Gaussian. It also follows that any operator and time-ordered quasi densities and characteristic functions are Gaussian. The situation here is similar to the many Gaussian quasi-variables case. We have therefore the following theorem.

Theorem 6

When $\{b(t), b^\dagger(t)\}$ is a Gaussian quantum process if and only if the third and higher order cumulants defined in any time operator order are all vanishing.

Note that for the quasi process $\{\beta(t), \beta^*(t)\}$ to be Gaussian only one quasi density or characteristic function need be Gaussian for each n sequence $\{\beta(t_1)\beta^*(t_1); \ldots\ldots; \beta(t_n)\beta^*(t_n)\}$.

With (149) and (150) a complete characterization of a Gaussian quasi process is given by the mean

$$\overline{b^\dagger(t)} \triangleq \langle b^\dagger(t)\rangle = \langle b(t)\rangle^* \tag{151}$$

and the covariances

$$\langle (b^\dagger(t)-\overline{b(t)}^*)(b(s)-\overline{b(s)})\rangle = C_{b^\dagger b}(t, s) \tag{152}$$

$$\langle (b(t)-\overline{b(t)})(b(s)-\overline{b(s)})\rangle = C_{bb}(t, s) \tag{153}$$

from Theorem 6. We shall not write an explicit form of the multi-time P-function, as it is the same as a classical distribution.

We can see that all usual properties of a Gaussian process are preserved in every one of our quasi-density functions. Jointly Gaussian processes can be similarly defined. The notion of statistical independent processes also follows in the same manner. We shall not pursue a detailed development here.

3.2.3 Karhunen-Loève Expansion for Quantum Processes

We shall now develop a Karhunen-Loève expansion theorem for a class of quantum processes. Let b(t) be an observable with mean (151) and covariance (152) and (153). No Gaussian assumption is made and (146) is not needed. Let

$$C_{b^\dagger b}(t,s) = \sum_k \lambda_1^k \phi_k^*(t)\, \phi_k(s) \tag{154}$$

$$C_{bb^\dagger}(t,s) = \langle (b(t)-\overline{b(t)})(b^\dagger(s)-\overline{b(s)}^*)\rangle = \sum_k \lambda_2^k \phi_k(t)\, \phi_k^*(s) \tag{155}$$

$$C_{bb}(t,s) = 0 \tag{156}$$

$$\langle b(t)\rangle = \sum_k \bar{a}_k \phi_k(t), \tag{157}$$

with

$$\int \phi_k(t)\, \phi_{k'}^*(t)\, W_1(t)\, dt = \delta_{kk'} \tag{158}$$

$$\sum_k \phi_k(t)\, \phi_k^*(t')\, W_1(t') = \delta(t-t') \tag{159}$$

similar to Eqs. 75 and 76. We have then the following theorem.

<u>Theorem</u> 7

For a process b(t) obeying (154)-(156) we can expand

$$b(t) = \sum_k a_k \phi_k(t) \tag{160}$$

with a set of operators a_k having mean

$$\langle a_k\rangle = \bar{a}_k = \langle a_k^\dagger\rangle^* \tag{161}$$

and covariances

$$\left\langle \left(a_k^\dagger - \bar{a}_k^*\right)(a_{k'} - \bar{a}_{k'})\right\rangle = \delta_{kk'}\lambda_1^k \tag{162}$$

$$\left\langle (a_{k'} - \bar{a}_{k'})\left(a_k^\dagger - \bar{a}_k^*\right)\right\rangle = \delta_{kk'}\lambda_2^k \tag{163}$$

$$\langle (a_{k'} - \bar{a}_{k'})(a_k - \bar{a}_k)\rangle = 0. \tag{164}$$

To show the possibility of such an expansion, we observe that

$$a_k = \int b(t)\, \phi_k^*(t)\, W_1(t)\, dt \tag{165}$$

so that

$$\left\langle \left(a_k^\dagger - \bar{a}_k^*\right)(a_{k'} - \bar{a}_{k'})\right\rangle = \int C_{b^\dagger b}(t,s)\, \phi_k(t)\, W_1(t)\, \phi_{k'}^*(s)\, W_1(s)\, dtds$$

$$= \lambda_1^k \delta_{kk'}.$$

Equation (163) follows similarly. When b(t) is Gaussian the quasi variables corresponding to the operators a_k will then be statistically independent.

We next define a white Gaussian process to be one for which

$$\langle b^\dagger(t)b(u)\rangle = \gamma_1 \delta(t-u) \tag{166}$$

$$\langle b(u)b^\dagger(t)\rangle = \gamma_2 \delta(t-u) \tag{167}$$

$$\langle b^\dagger(t)b^\dagger(u)\rangle = \gamma_3 \delta(t-u) \tag{168}$$

$$\langle b(t)b(u)\rangle = \gamma_3 \delta(t-u). \tag{169}$$

We also have an expansion theorem similar to Theorem 7.

Theorem 8

A white Gaussian quantum process b(t) with zero mean and correlation (166)-(169) can be expanded in any real orthonormal set

$$b(t) = \sum_k a_k \phi_k(t) \tag{170}$$

$$\int \phi_k(t)\, \phi_{k'}(t)\, dt = \delta_{kk'} \tag{171}$$

such that the associated classical variables of the operators a are statistically independent Gaussian quasi variables

$$\langle a_k^\dagger a_{k'}\rangle = \delta_{kk'}\gamma_1 \tag{172}$$

$$\langle a_{k'} a_k^\dagger\rangle = \delta_{kk'}\gamma_2 \tag{173}$$

$$\langle a_k^\dagger a_{k'}^\dagger\rangle = \delta_{kk'}\gamma_3 = \langle a_k a_{k'}\rangle^*. \tag{174}$$

The proof of this theorem can be carried out in a straightforward manner similar to the previous one, and is therefore omitted.

Expansion theorems of this type are clearly useful for many purposes. In classical communication theory their applications are well known, and we would expect that they would also play an important role in quantum communication analysis.

3.2.4 Markov Quasi Processes

Another useful characterization of quantum processes is possible by using the Markov idea. We let[70]

$$\left\langle \delta\left(\beta_n^* - b^\dagger(t_n)\right) \delta(\beta_n - b(t_n)) \right\rangle$$

$$= \int P\left(\beta_n^*, \beta_n, t_n \middle| \alpha^*, \alpha, t_{n-1}\right) d^2\alpha \left\langle \delta\left(\alpha^* - b^\dagger(t_{n-1})\right) \delta(\alpha - b(t_{n-1})) \right\rangle, \qquad t > t \tag{175}$$

as the definition for the conditional distribution

$$P(\beta^*, \beta, t \mid \alpha^*, \alpha, t') \qquad t > t'. \tag{176}$$

A quantum process is then defined to be Markovian if its multi-time P-function of (147) obeys[70]

$$P\left(\beta_n^* \beta_n t_n; \ldots; \beta_1^* \beta_1 t_1\right) = P\left(\beta_n^* \beta_n t_n \middle| \beta_{n-1}^* \beta_{n-1} t_{n-1}\right) P\left(\beta_{n-1}^* \beta_{n-1} t_{n-1}; \ldots \beta_1^* \beta_1 t_1\right) \tag{177}$$

for

$$t_n > t_{n-1} > \ldots > t_1. \tag{178}$$

This property can be shown to be equivalent to the quantum regression theorem[65, 70, 73] with which general multi-time quantum averages can be computed by two-time results. Other characteristic properties of what we call a Markov case[70, 73] also follow from (177). If the P-function of (147) is a classical density, (197) is the usual definition of a Markov process and gives rise to the Chapman-Kolmogorov-Smoluchowshi condition.

It can be seen again from the property of c-number commutators involved that the Markov property of one quasi density implies that all other quasi densities are Markovian, obeying relations similar to (177) and (178).

As in the ordinary Markovian case the one-time P-function of a quantum Markov process $P(\beta, \beta^*, t)$ can be shown to obey a Fokker-Planck-Kolmogorov equation under appropriate conditions, as the derivation involves only the condition (177). In the same way the conditional Green's function solution to the Fokker-Planck-Kolmogorov equation[60-64] is the conditional distribution (176). Thus a one-time density operator conditioned upon an initial distribution contains full information about a quantum Markov process.

We call the associated classical function $\beta(t)$ of a quantum Markov process $b(t)$ a Markov quasi process. Thus Markov quasi processes have quasi densities that are completely characterized by a Fokker-Planck-Kolmogorov equation under conditions that will be obeyed in our applications. Specification of such a quasi process can then be given in terms of the drifts and diffusion coefficients[60-65, 69, 72, 73]

$$A_\beta(t) = \lim_{\Delta t \to 0} \frac{1}{\Delta t} \langle b(t+\Delta t) - b(t) \rangle \tag{179}$$

$$2!\, D_{\beta^*\beta}(t) = 2!\, D_{b^\dagger b}(t)$$

$$= \lim_{\Delta t \to 0} \frac{1}{\Delta t} \langle [b^\dagger(t+\Delta t) - b^\dagger(t)][b(t+\Delta t) - b(t)] \rangle. \tag{180}$$

Generalization to include higher order diffusion terms is also possible.[65,71]

In our application we shall adopt a Langevin rather than a Fokker-Planck point of view. In such a description our quantum process is defined by a quantum Langevin equation[69]

$$\begin{aligned} Lb(t) &= e(t) + f(t) \\ L^\dagger b^\dagger(t) &= e^*(t) + f^\dagger(t), \end{aligned} \tag{181}$$

where L is a linear time differential operator, and e(t) a deterministic excitation. The noise process f(t) is an operator

$$[f(t), f^\dagger(t)] \neq 0$$

and is usually taken to be Gaussian. When

$$[f(t), f^\dagger(t')] \propto \delta(t-t')$$

the observables $\{b(t), b^\dagger(t)\}$ will be components of a vector quantum Markov process. When L involves only first-order time derivatives, $\{b(t), b^\dagger(t)\}$ then becomes a quantun Markov process.

With proper ordering interpretations we can find, as previously, the c-number quasi processes $\{\beta(t), \beta^*(t)\}$ which correspond to $\{b(t), b^\dagger(t)\}$ and which obey a c-number Langevin equation. Usual relations between Langevin equations and the corresponding Markov processes will still hold[70-73] for this quasi process. When the equation is linear the situation is particularly simple. We shall not give a detailed development here.

3.2.5 Stationary Quantum Processes

Stationary processes play a particular role in our study similar to Markov processes, since they obey some simple fluctuation-dissipation theorems. We define a quantum process b(t) to be stationary when all multi-time averages are invariant to a shift in origin. That is,

$$\langle b^\dagger(t_1) \ldots b^\dagger(t_n) b(t_n) \ldots b(t_1) \rangle = \langle b^\dagger(t_1 - t_o) \ldots b^\dagger(t_n - t_o) b(t_n - t_o) \ldots b(t_1 - t_o) \rangle. \tag{182}$$

In our application we actually need only

$$\langle b^\dagger(t)b(t')\rangle = \langle b^\dagger(t-t')b(o)\rangle \qquad \text{etc.}$$

for second-order averages, since we deal, for the most part, with Gaussian processes. The stationary processes that we shall encounter will be described by linear time-invariant differential equations.

3.3 Conclusion

We have developed certain fundamental quantum stochastic concepts that will be employed in the following sections for quantum channel characterization. While we shall actually be talking about statistical quantum fields, rather than processes, there is no need to discuss them separately. Quantum fields bear to quantum processes relations exactly analogous to those of classical random fields to classical random functions.

The most important idea in our previous development is Gaussianity, since we shall deal in the quantum treatment exclusively with Gaussian additive noise. Our results therefore lay the groundwork for treatment of such quantum processes. The notion of a quasi process will make classical and quantum-channel comparisons more efficient and illuminating.

D. QUANTUM FIELD PROPAGATION AND CLASSICAL CORRESPONDENCE

We shall develop the theory of quantum field transmission through a linear system, employing quantum processes that have just been described. Our quantum discussion will closely parallel the development of classical random field propagation in Section I-B. In particular, we shall establish the way in which given classical field specifications give rise to corresponding unique quantum field specifications. With this connection we can then set up the quantum channel representation directly from the given classical channel.

We shall restrict our consideration to deterministic channels. Stochastic channels and signals will be discussed in Section I-E.

4.1 General Theory of Quantum Field Propagation

We consider the transmission of electromagnetic quantum fields through media characterized by linear partial differential equations of field propagation. The nature of our channel is exactly the same as that previously discussed. Instead of c-number wave fields $\psi(\bar{r}, t)$ we are now just treating q-number fields $\psi_{op}(\bar{r}, t)$. Our discussion is a generalization of section 2.1 to the quantum region, by application of our results in Section I-C.

Let $\psi_{op}(\bar{r}, t)$ be a scalar field operator[74-77] with adjoint $\psi^{\dagger}_{op}(\bar{r}, t)$ and from which the electric and magnetic fields can be obtained by linear operations. See Appendix F for details. The dynamical field equation describing our channel is

$$\mathscr{L}\psi_{op}(\bar{r}, t) = E(\bar{r}, t) + \mathscr{F}_{op}(\bar{r}, t), \tag{183}$$

where $\mathscr{L}$ is a linear partial differential operator with respect to t, the components of $\bar{r}$, $E(\bar{r}, t)$ a c-number deterministic excitation, and $\mathscr{F}_{op}(\bar{r}, t)$ a random-noise-source operator. As in Eq. 5 we take

$$\mathscr{L} = \mathscr{L}_1 + \mathscr{L}_2 \tag{184}$$

for two ordinary differential operators with respect to t and $\bar{r}$. The noise-source operator has zero average

$$\langle \mathscr{F}_{op}(\bar{r}, t)\rangle = 0 \tag{185}$$

and is taken to be a Gaussian quantum field. Although we only discussed quantum processes in the last section, it should be clear that $\psi_{op}(\bar{r}, t)$ is a Gaussian quantum field if and only if all of its linear functionals

$$\int \psi_{op}(\bar{r}, t)\, W(\bar{r}, t)\, d\bar{r}dt \tag{186}$$

are Gaussian quantum observables.

Since $\mathscr{L}$ factorizes in Eq. 184 as in Eq. 5, we have (Eqs. 6 and 7) also

$$\mathscr{L}\phi_{kn}(\bar{r}, t) = (\lambda_k + \nu_n)\, \phi_{kn}(\bar{r}, t) \tag{187}$$

$$\phi_{kn}(\bar{r}, t) = \phi_k(\bar{r})\, y_n(t) \tag{188}$$

for the c-number eigenfunctions $\phi_{kn}(\bar{r}, t)$ of $\mathscr{L}$.

In the present quantum case we have to know the commutator

$$\left[\psi_{op}(\bar{r}, t), \psi^{\dagger}_{op}(\bar{r}', t')\right] \tag{189}$$

or equivalently

$$\left[\mathscr{F}_{op}(\bar{r}, t), \mathscr{F}^{\dagger}_{op}(\bar{r}', t')\right] \tag{190}$$

for a complete characterization of the quantum field. We shall discuss later how Eqs. 189 and 190 may be determined in different situations. Here we generally assume that the noise field $\mathscr{F}_{op}(\bar{r}, t)$ and, in particular, the commutator (190) are specified.

It should be clear that our present consideration is again restricted to Gaussian noise added to the electromagnetic fields, and to linear space-time filter systems.

4.1.1 General Case

Let us assume that (190) is given and that

$$\langle \mathscr{F}^{\dagger}_{op}(\bar{r}, t)\, \mathscr{F}_{op}(\bar{r}', t')\rangle \triangleq \sum_k C^k_{\mathscr{F}^{\dagger}\mathscr{F}}(t, t')\, \phi^*_k(\bar{r})\, \phi_k(\bar{r}') \tag{191}$$

$$\langle \mathscr{F}_{op}(\bar{r}, t)\, \mathscr{F}_{op}(\bar{r}', t')\rangle \triangleq \sum_k C^k_{\mathscr{F}\mathscr{F}}(t, t')\, \phi_k(\bar{r})\, \phi_k(\bar{r}') \tag{192}$$

$$= \langle \mathscr{F}_{op}(\bar{r}', t')\, \mathscr{F}_{op}(\bar{r}, t)\rangle = \langle \mathscr{F}^{\dagger}_{op}(\bar{r}, t)\, \mathscr{F}^{\dagger}_{op}(\bar{r}', t')\rangle^*.$$

This $\mathscr{F}_{op}(\bar{r}, t)$ is taken to be the noise source driving the wave equation for the field

$$\psi_{op}(\bar{r}, t) = \sum_k \phi_k(\bar{r})\, b_k(t) \tag{193}$$

with photon operators $b_k(t)$

$$\left[b_k(t), b^{\dagger}_k(t)\right] = 1. \tag{194}$$

We assume (see Section I-B) that

$$\int \phi_k(\bar{r})\, \phi^*_{k'}(\bar{r})\, d\bar{r} = \delta_{kk'} \tag{195}$$

$$\sum_k \phi_k(\bar{r})\, \phi_k(\bar{r}') = \delta(\bar{r}-\bar{r}'). \tag{196}$$

A knowledge of (190) and (191) is equivalent to that of (191) and $\langle \mathscr{F}_{op}(\bar{r},t)\mathscr{F}^\dagger_{op}(\bar{r}',t')\rangle$ when (190) is a c-number function that we shall assume. We take

$$\langle \mathscr{F}_{op}(\bar{r},t)\mathscr{F}^\dagger_{op}(\bar{r}',t')\rangle = \sum_k C^k_{\mathscr{F}\mathscr{F}^\dagger}(t,t')\, \phi_k(\bar{r})\, \phi^*_k(\bar{r}'). \tag{197}$$

Thus we are assuming that (190) is in general of the form

$$\left[\mathscr{F}_{op}(\bar{r},t), \mathscr{F}^\dagger_{op}(\bar{r}',t')\right] = \sum_k \{C^k_{\mathscr{F}\mathscr{F}^\dagger}(t,t') - C^k_{\mathscr{F}^\dagger\mathscr{F}}(t,t')\}\, \phi_k(\bar{r})\, \phi^*_k(\bar{r}'). \tag{198}$$

If we expand

$$\mathscr{F}_{op}(\bar{r},t) = \sum_k \phi_k(\bar{r})\, F_k(t) \tag{199}$$

for noise operators $\{F_k(t)\}$, we see from (192), (197), and (198) that

$$\left[F_k(t), F^\dagger_{k'}(t')\right] = \{C^k_{\mathscr{F}\mathscr{F}^\dagger}(t,t') - C^k_{\mathscr{F}^\dagger\mathscr{F}}(t,t')\}\, \delta_{kk'} \tag{200}$$

$$[F_k(t), F_{k'}(t')] = 0 \tag{201}$$

and

$$\langle F_k(t)\rangle = 0 \tag{202}$$

$$\langle F^\dagger_k(t) F_{k'}(t')\rangle = \delta_{kk'} C^k_{\mathscr{F}^\dagger\mathscr{F}}(t,t') \tag{203}$$

$$\langle F_k(t) F_{k'}(t')\rangle = \delta_{kk'} C^k_{\mathscr{F}\mathscr{F}}(t,t'). \tag{204}$$

Thus as a direct consequence of (191), (192), and (197) we have independent Gaussian observables $F_k(t)$. If we also write, as in Eq. 15,

$$E(\bar{r},t) = \sum_k \phi_k(\bar{r})\, e_k(t), \tag{205}$$

Eq. 183 is reduced to the following set of ordinary differential equations for the operators $b_k(t)$

$$(\lambda_k + \mathscr{L}_1)\, b_k(t) = e_k(t) + F_k(t), \tag{206}$$

where the correlations of the Gaussian operators $F_k(t)$ are as given by (200)-(204).

Similarly to the discussion of Eqs. 22 and 23, we can write the solution of (206) in the form

$$b_k(t) = \int_{t_o}^{t} h_k(t, \tau)\, e_k(\tau)\, d\tau + n_k^{op}(t) \tag{207}$$

with an additive noise operator

$$n_k^{op}(t) = \int_{-\infty}^{t} h_k(t, \tau)\, F_k(\tau)\, d\tau \tag{208}$$

$$= \int_{t_o}^{t} h_k(t, \tau)\, F_k(\tau)\, d\tau + \int_{-\infty}^{t_o} h_k(t, \tau)\, F_k(\tau)\, d\tau. \tag{209}$$

The $h_k(t, \tau)$ is again the zero-state impulse response of the differential system (Eq. 16). The second term on the right-hand side of (209) represents the contribution to the additive noise $n_k^{op}(t)$ of initial conditions. It can be seen that

$$[b_k(t), b_{k'}(t')] = 0 \tag{210}$$

$$\left[b_k(t), b_{k'}^{\dagger}(t')\right] = \delta_{kk'} \int_{-\infty}^{t} d\tau \int_{-\infty}^{t'} ds\, h_k(t, \tau) h_k^{*}(t', s) \left\{C^k_{\mathscr{F}\mathscr{F}^{\dagger}}(\tau, s) - C^k_{\mathscr{F}^{\dagger}\mathscr{F}}(\tau, s)\right\} \tag{211}$$

$$\langle b_k(t), b_{k'}^{\dagger}(t')\rangle = \delta_{kk'} \int_{-\infty}^{t} d\tau \int_{-\infty}^{t'} ds\, h_k(t, \tau)\, h_k^{*}(t', s)\, C^k_{\mathscr{F}\mathscr{F}^{\dagger}}(\tau, s) \quad \text{etc.} \tag{212}$$

Thus the different normal-mode operators $b_k(t)$ are statistically independent Gaussian observables, since they are linear transformations of the independent $F_k(t)$.

With the representation (207) it can be seen that for a fixed-input excitation each Gaussian $b_k(t)$ is completely specified by the correlations of $F_k(t)$ and $h_k(t, \tau)$. Our field $\psi_{op}(\bar{r}, t)$ is therefore also completely specified with knowledge of $\phi_k(\bar{r})$.

We also emphasize that the noise source $\mathscr{F}_{op}(\bar{r}, t)$ or $F_k(t)$ in this differential equation description is a thermal noise associated with the filter system. Other possible independent noises can also be introduced. They will be considered in Section I-E.

4.1.2 Markov Case

We next investigate the case in which

$$C^k_{\mathscr{F}\mathscr{F}}(t, t') = \delta(t-t')\, 2J_1^k(t) \tag{213}$$

$$C^k_{\mathscr{F}^\dagger \mathscr{F}}(t,t') = \delta(t-t')\, 2J^k_2(t) \tag{214}$$

$$C^k_{\mathscr{F}\mathscr{F}^\dagger}(t,t') = \delta(t-t')\, 2J^k_3(t) \tag{215}$$

for the noise source $\mathscr{F}_{op}(\bar{r},t)$ driving the field (193). In this situation the $F_k(t)$ are independent white Gaussian observables so that each $b_k(t)$ is a component of a vector Markov process, as discussed in section 3.2.4 (Part I). This vector quantum process is formed by $b_k(t)$ and its higher derivatives.

Following the same discussions as in section 2.1.2 (Part I) we consider here the case in which $\mathscr{L}_1$ involves only first-order time derivatives. The vector Markov case is treated in Appendix B. Thus we have

$$(\lambda_k + \mathscr{L}_1)\, b_k(t) = e_k(t) + F_k(t) \tag{216}$$

$$\langle F_k(t)\rangle = 0$$

$$\langle F_k(t) F_k(t')\rangle = \delta_{kk'}\delta(t-t')\, 2J^k_1(t) \tag{217}$$

$$\langle F_k(t) F^\dagger_{k'}(t')\rangle = \delta_{kk'}\delta(t-t')\, 2J^k_3(t) \tag{218}$$

$$\left[F_k(t), F^\dagger_{k'}(t')\right] = \delta_{kk'}\delta(t-t')\, 2\{J^k_3(t) - J^k_2(t)\}. \tag{219}$$

Again we find it convenient to introduce the notation

$$\underline{b}_k(t) = \begin{pmatrix} b_k(t) \\ b^\dagger_k(t) \end{pmatrix} \tag{220}$$

$$\underline{F}_k(t) = \begin{pmatrix} F_k(t) \\ F^\dagger_k(t) \end{pmatrix} \tag{221}$$

$$\underset{\sim}{\mathscr{L}}_1 = \begin{pmatrix} \mathscr{L}_1 & 0 \\ 0 & \mathscr{L}^\dagger_1 \end{pmatrix} \tag{222}$$

$$\underline{e}_k(t) = \begin{pmatrix} e_k(t) \\ e^*_k(t) \end{pmatrix} \tag{223}$$

$$\underset{\sim}{\lambda}_k = \begin{pmatrix} \lambda_k & 0 \\ 0 & \lambda^*_k \end{pmatrix} \tag{224}$$

and write

$$(\underset{\sim}{\lambda}_k + \underset{\sim}{\mathscr{L}}_1)\, \underline{b}_k(t) = \underline{e}_k(t) + \underline{F}_k(t). \tag{225}$$

A development analogous to section 2.1.2 (Part I) can be given for the quantum operators. (We shall just give the most important points.) We assume a stable system in the sense of Eq. 55. Let

$$\underset{\sim}{\lambda}_k + \underset{\sim}{\mathscr{L}}_1 = \underset{\sim}{I}\, \frac{d}{dt} + \underset{\sim}{\Lambda}_k(t) \tag{226}$$

$$\left[\underset{\sim}{I}\, \frac{d}{dt} + \underset{\sim}{\Lambda}_k(t)\right] \underset{\sim}{h}_k(t, \tau) = 0, \qquad t > \tau \tag{227}$$

$$\underset{\sim}{h}_k(t, t) = \underset{\sim}{I}, \tag{228}$$

then we have

$$\underline{b}_k(t) = \int_{t_o}^{t} \underset{\sim}{h}_k(t, \tau)\, \underline{e}_k(\tau)\, d\tau + \underline{n}_k^{op}(t), \tag{229}$$

with

$$\underline{n}_k^{op}(t) = \int_{-\infty}^{t} \underset{\sim}{h}_k(t, \tau)\, \underline{F}_k(\tau)\, d\tau. \tag{230}$$

The noise-source correlation is

$$\langle \underline{F}_k(t) \underline{F}_k^{\dagger}(t') \rangle = 2\underset{\sim}{D}_k'(t)\, \delta(t-t'), \tag{231}$$

with

$$\underset{\sim}{D}_k'(t) = \begin{pmatrix} J_1^k(t) & J_3^k(t) \\ J_2^k(t) & J_1^{k*}(t) \end{pmatrix}. \tag{232}$$

The covariance

$$\underset{\sim}{\phi}_k^{qt}(t, t') \triangleq \langle \underline{n}_k^{op}(t)\, \underline{n}_k^{op}(t')^T \rangle \tag{233}$$

is related to the variance $\underset{\sim}{\phi}_k^{qt}(t, t)$ by

$$\begin{aligned} \underset{\sim}{\phi}_k^{qt}(t, t') &= \underset{\sim}{h}_k(t, t')\, \underset{\sim}{\phi}_k^{qt}(t', t') \qquad t > t' \\ \underset{\sim}{\phi}_k^{qt}(t', t) &= \underset{\sim}{\phi}_k^{qt}(t', t')\, \underset{\sim}{h}_k^T(t, t') \qquad t > t'. \end{aligned} \tag{234}$$

Also, we have

$$\underset{\sim}{\phi}_k^{qt}(t,t) = 2\int_{-\infty}^{t} \underset{\sim}{h}_k(t,\tau)\, \underset{\sim}{D}_k'(\tau)\, \underset{\sim}{h}_k^T(t,\tau)\, d\tau \tag{235}$$

$$\frac{d}{dt}\underset{\sim}{\phi}_k^{qt}(t,t) = 2\underset{\sim}{D}_k'(t) - \underset{\sim}{\Lambda}_k(t)\, \underset{\sim}{\phi}_k^{qt}(t,t) - \underset{\sim}{\phi}_k^{qt}(t,t)\, \underset{\sim}{\Lambda}_k^T(t). \tag{236}$$

Derivations of (234)-(236) follow in the same way as those in section 2.1.2 (Part I). Similarly to the classical case, the relations (234) and (236) will be our quantum-mechanical fluctuation dissipation theorems for quantum Markov processes. The discussion in section 2.1.2 (Part I) applies here in an identical manner. Further discussion is given in Appendix C.

We wish to give here the fluctuation-dissipation theorem for fields in coordinate-independent form. Let $\underset{\sim}{G}(\bar{r}t;\bar{r}'t')$ be the Green's function of

$$(\underset{\sim}{\mathscr{L}}_1+\underset{\sim}{\mathscr{L}}_2)\, \underline{\psi}_{op}(\bar{r},t) = \underline{E}(\bar{r},t) + \underline{\mathscr{F}}_{op}(\bar{r},t) \tag{237}$$

under the space boundary conditions of interest and zero initial conditions. The notation

$$\underline{\psi}_{op}(\bar{r},t) = \begin{pmatrix} \sum_k \phi_k(\bar{r})\, b_k(t) \\ \\ \sum_k \phi_k^*(\bar{r})\, b_k^\dagger(t) \end{pmatrix} \tag{238}$$

and $\underline{E}(\bar{r},t)$, $\underline{\mathscr{F}}_{op}(\bar{r},t)$ is obvious. This Green's function can be expanded in the form

$$\underset{\sim}{G}(\bar{r}t;\bar{r}'t') = \sum_k \phi_k(\bar{r})\, \phi_k^*(\bar{r}')\, \underset{\sim}{h}_k(t,t'). \tag{239}$$

It is now straightforward to obtain from (234) and (239) the following distributive fluctuation-dissipation theorem for the output field $\underline{\psi}_{op}(\bar{r},t)$

<u>Theorem</u> 9

The two-time field covariances are related to the one-time field variances by

$$\langle \underline{\psi}_{op}'(\bar{r},t)\underline{\psi}_{op}'^T(\bar{r}',t')\rangle = \int d\bar{r}''\, \underset{\sim}{G}(\bar{r}t;\bar{r}''t')\langle \underline{\psi}_{op}'(\bar{r}'',t')\underline{\psi}_{op}'^T(\bar{r}',t')\rangle; \qquad t > t' \tag{240}$$

$$\langle \underline{\psi}_{op}'(\bar{r},t')\underline{\psi}_{op}'^T(\bar{r}',t)\rangle = \int d\bar{r}''\, \langle \underline{\psi}_{op}'(\bar{r},t')\underline{\psi}_{op}'^T(\bar{r}'',t)\rangle\, \underset{\sim}{G}^T(\bar{r}''t;\bar{r}'t'); \qquad t > t'. \tag{241}$$

Here the notation $\underline{\psi}_{op}'(\bar{r},t)$ implies that the mean has been subtracted out. To establish (240) we can multiply both sides of (234) by $\phi_k(\bar{r})\, \phi_k^*(\bar{r}')$ and then sum over k. The right-hand side of (240) follows from simple manipulations. The fluctuation-dissipation

theorem for the noise-field correlation can be obtained from (236) similarly.

4.1.3 Stationary Case

In the stationary case it is more convenient to consider directly the electric or magnetic fields. Let

$$\mathscr{E}_{op}(\bar{r}, t) = \sum_k \phi_k(\bar{r})\, Q_k(t) \tag{242}$$

be the electric operator obeying the wave equation

$$(\mathscr{L}_1+\mathscr{L}_2)\, \mathscr{E}_{op}(\bar{r}, t) = E(\bar{r}, t) + \mathscr{F}_{op}(\bar{r}, t). \tag{243}$$

Note that $Q_k(t)$ is a self-adjoint operator so that $E(\bar{r}, t)$ is now real. The space-time invariant operators $\mathscr{L}_1$ and $\mathscr{L}_2$ involve then only real coefficients too. The correlations of the self-adjoint noise field $\mathscr{F}_{op}(\bar{r}, t)$ is given by

$$\langle \mathscr{F}_{op}(\bar{r}, t)\, \mathscr{F}_{op}(\bar{r}', t')\rangle = \sum_k C_1^k(t-t')\, \phi_k(\bar{r})\, \phi_k(\bar{r}') \tag{244}$$

$$[\mathscr{F}_{op}(\bar{r}, t), \mathscr{F}_{op}(\bar{r}', t')] = \sum_k C_2^k(t-t')\, \phi_k(\bar{r})\, \phi_k(\bar{r}'). \tag{245}$$

A decomposition into spatial normal modes, similarly to previous cases, yields

$$(\lambda_k+\mathscr{L}_1)\, Q_k(t) = e_k(t) + F_k(t) \tag{246}$$

for real excitations $e_k(t)$. The noise source $F_k(t)$ are self-adjoint operators and have correlations, from (239) and (240), given by

$$\langle F_k(t) F_{k'}(0)\rangle = C_1^k(t)\, \delta_{kk'} \tag{247}$$

$$\langle F_k(0) F_{k'}(t)\rangle = \{C_1^k(t)-C_2^k(t)\}\, \delta_{kk'}. \tag{248}$$

The higher cumulants of $F_k(t)$ are taken to vanish so that $F_k(t)$ are independent Gaussian observables.

The observables for each mode k are functions of $Q_k(t)$ and

$$P_k(t) \triangleq \frac{dQ_k(t)}{dt}. \tag{249}$$

The observables $Q_k(t)$ and $P_k(t)$ would have quasi densities, for example, the Wigner distribution, that are Gaussian. See Appendix F for further details. It should be clear that properties of $Q_k(t)$ and $P_k(t)$ are completely specified by those of $F_k(t)$ and

the impulse response $h_k(t, \tau)$ of (240).

The commutator between the conjugate observables

$$[Q_k(t), P_k(t')] \tag{250}$$

has now to be given or determined in place of (231). Instead of (194) we have

$$[Q_k(t), P_k(t)] = i\hbar, \tag{251}$$

where $\hbar$ is Planck's constant.

We define the Fourier transform of an operator A(t) by

$$A(\omega) = \int_{-\infty}^{\infty} e^{i\omega t} A(t)\, dt \tag{252}$$

$$A^{\dagger}(\omega) = \int_{-\infty}^{\infty} e^{-i\omega t} A^{\dagger}(t)\, dt \tag{253}$$

and the spectrum by

$$\langle A(\omega)A^{\dagger}(\omega)\rangle \triangleq \int_{-\infty}^{\infty} dt\, e^{-i\omega t} \langle A(0)A^{\dagger}(t)\rangle \tag{254}$$

$$\langle A^{\dagger}(\omega)A(\omega)\rangle \triangleq \int_{-\infty}^{\infty} dt\, e^{-i\omega t} \langle A^{\dagger}(t)A(0)\rangle. \tag{255}$$

When A is self-adjoint the dagger notation in the spectrum just denotes where the time dependence belongs in the correlation function. The following quantum fluctuation-dissipation theorems hold[66, 68, 106, 107] as generalizations of Eqs. 68 and 69.

$$\langle F_k^{\dagger}(\omega)F_k(\omega)\rangle = 2\hbar\,\bar{n}(\omega)\, \mathscr{L}_k^{I}(\omega) \tag{256}$$

$$\langle F_k(\omega)F_k^{\dagger}(\omega)\rangle = 2\hbar\{\bar{n}(\omega)+1\}\, \mathscr{L}_k^{I}(\omega) \tag{257}$$

$$\langle Q_k'^{\dagger}(\omega)Q_k'(\omega)\rangle = 2\hbar\,\bar{n}(\omega)\, \mathrm{Im}\left\{-\frac{1}{\mathscr{L}_k(\omega)}\right\} \tag{258}$$

$$\langle Q_k'(\omega)Q_k'^{\dagger}(\omega)\rangle = 2\hbar\{\bar{n}(\omega)+1\}\, \mathrm{Im}\left\{-\frac{1}{\mathscr{L}_k(\omega)}\right\}, \tag{259}$$

where

$$\bar{n}(\omega) = \frac{1}{e^{\hbar\omega/k_B T} - 1}. \tag{260}$$

The parameter T is the temperature at which the fields are in thermal equilibrium. The frequency response $\mathscr{L}_k(\omega)$ and $\mathscr{L}_k^I(\omega)$ is defined in Eqs. 65 and 68. The notation $Q_k'(\omega)$ indicates, as usual in our treatment, that the mean has been subtracted out.

$$Q_k'(\omega) = Q_k(\omega) - \langle Q_k(\omega)\rangle. \tag{261}$$

For a discussion of Eqs. 256-259 see Appendix C. Other correlations of $P_k(\omega)$ can be obtained similarly by noting that

$$P_k(\omega) = -i\omega Q_k(\omega). \tag{262}$$

It is clear that (250) and (252) goes readily to the classical limits (Eqs. 68 and 69) when

$$k_B T \gg \hbar\omega.$$

To give the fluctuation-dissipation theorems for the field $\mathscr{E}(\bar{r}, t)$, we let

$$\langle \mathscr{E}^\dagger(\bar{r}, \omega)\, \mathscr{E}(\bar{r}, \omega)\rangle = \sum_k \phi_k(\bar{r})\, \phi_k(\bar{r}')\langle Q_k^\dagger(\omega) Q_k(\omega)\rangle \tag{263}$$

$$\langle \mathscr{E}'(\bar{r}, \omega)\, \mathscr{E}'^\dagger(\bar{r}', \omega)\rangle = \sum_k \phi_k(\bar{r})\, \phi_k(\bar{r}')\langle Q_k'(\omega) Q_k'^\dagger(\omega)\rangle. \tag{264}$$

The expressions $\mathscr{E}(\bar{r}, \omega)$ are clearly time Fourier transforms of $\mathscr{E}_{op}(\bar{r}, t)$, and the corresponding spectrum is similarly defined as in (254)-(255). We also define the Fourier transform of the Green's function

$$G(\bar{r}\omega; \bar{r}'o) = \int_{-\infty}^{\infty} e^{i\omega t}\, G(\bar{r}t; \bar{r}'o)\, dt. \tag{265}$$

We have then the distributive fluctuation-dissipation theorems for $\mathscr{E}_{op}(\bar{r}, t)$ in the frequency domain expressed by the following theorem.

<u>Theorem</u> 10

The spectra of $\mathscr{E}_{op}(\bar{r}, t)$ are given in terms of $G(\bar{r}\omega; \bar{r}'o)$ by

$$\langle \mathscr{E}'^\dagger(\bar{r}, \omega)\, \mathscr{E}'(\bar{r}', \omega)\rangle = 2\hbar\, \bar{n}(\omega)\, \mathrm{Im}\, \{-G(\bar{r}\omega; \bar{r}'o)\} \tag{266}$$

$$\langle \mathscr{E}'(\bar{r}, \omega)\, \mathscr{E}'^\dagger(\bar{r}', \omega)\rangle = 2\hbar\{\bar{n}(\omega)+1\}\, \mathrm{Im}\, \{-G(\bar{r}\omega; \bar{r}'o)\}. \tag{267}$$

To establish (266), we multiply both sides of (258) by $\phi_k(\bar{r})\, \phi_k(\bar{r}')$ and sum over k. The right-hand side of (266) follows from noting that $\{\mathscr{L}_k(\omega)\}^{-1}$ is the Fourier transform of $h_k(t)$. Similar relations can be given for the correlations of $F(\bar{r}, \omega)$ which will not be discussed here.

Note that in this stationary case we can also consider the photon operators $\{b_k(t), b_k^\dagger(t)\}$ instead of $\{Q_k(t), Q_k^\dagger(t)\}$. They are related in a very simple way.

$$Q_k(t) = \sqrt{\frac{\hbar}{2\omega(k)}}\; i\{b_k(t) - b_k^\dagger(t)\} \tag{268}$$

$$P_k(t) = \sqrt{\frac{\hbar\omega(k)}{2}}\; \{b_k(t) + b_k^\dagger(t)\}, \tag{269}$$

where $\omega(k)$ is the dispersion relation between frequency ω and wave vector k. Thus the results on $\{Q_k(t), P_k(t)\}$ can be transferred to the variables $\{b_k(t), b_k^\dagger(t)\}$. We have used the present form here mainly for convenience. For further discussion see Appendix F.

4.2 Necessity of Introducing Quantum Noise Source and Preservation of Commutation Rules

It is entirely possible and consistent to have

$$\mathscr{F}(\bar{r}, t) = 0$$

in the classical wave equation (Eq. 1). Such a situation would occur, for example, when T = 0 in the stationary case, as is evident from Eq. 56. In contrast, we cannot set

$$\mathscr{F}_{op}(\bar{r}, t) = 0$$

in the corresponding quantum case even when the temperature is zero, since the spectrum

$$\langle F_k(\omega) F_k^\dagger(\omega)\rangle$$

of (257) is nonvanishing. This so-called zero-point fluctuation[74, 76] arises from the commutator (251) and is a distinguishing quantum effect having no classical analogs.

These zero-point fluctuations are always present physically. As we have just observed, they are intimately connected with the commutation rules for the field variables. To insure the proper appearance of such quantum fluctuations, we have to insist on the preservation of commutators like (194). Mathematically, the validity of $b_k(t)$ or $Q_k(t)$ as proper quantum observables also depends on such commutator conservation. Physically the presence of such quantum fluctuations can be traced to quantum-mechanical energy conservation. We shall not elaborate on this point here.

We shall show that preservation of field commutator rules[69, 73, 130] requires, in general, the introduction of operator noise sources in the wave equation (183). We shall consider, in contrast to previous cases, the general conservation of two-time commutators like (211) or (189). Some explicit formulas will be given for the noise-source

commutator that conserves the field commutator through the wave equation. Again we find it natural to divide our discussions into three cases.

4.2.1 General Case

In our general case we wish to determine the commutator (189)

$$\left[\psi_{op}(\bar{r}, t), \psi^{\dagger}_{op}(\bar{r}', t')\right] = \sum_k \phi_k(\bar{r})\, \phi^*_k(\bar{r}')\, C_k(t, t') \tag{270}$$

so that

$$\left[b_k(t), b^{\dagger}_{k'}(t')\right] = \delta_{kk'} C_k(t, t'). \tag{271}$$

When the noise field $\mathscr{F}_{op}(\bar{r}, t)$ is taken to vanish, the solution $b_k(t)$ of (206) can no longer be expressed in the form (207)-(209) because the initial conditions have to be written explicitly. Similarly to Eq. 29, we can write

$$b_k(t) = \sum_{r=1}^{n} \sum_{n'=1}^{n} (-1)^{r-1} \frac{d^{r-1}}{d\tau^{r-1}} h_k(t, \tau)\Big|_{\tau=t_o} a_{n-n'}(t_o)\, b_k^{n'-r}(t_o) + \int_{t_o}^{t} h_k(t, \tau)\, e_k(\tau)\, d\tau \tag{272}$$

for the form of $\lambda_k + \mathscr{L}_1$ given by Eq. 25. The commutator can therefore be evaluated as

$$\left[b_k(t), b^{\dagger}_{k'}(t')\right] = \delta_{kk'} \sum_{r=1}^{n} \sum_{n'=1}^{n} \sum_{r'=1}^{n} \sum_{n''=1}^{n} (-1)^{r-1} (-1)^{r'-1} \frac{d^{r-1}}{d\tau^{r-1}} h_k(t, \tau)\Big|_{\tau=t_o}$$

$$\times \frac{d^{r'-1}}{d\tau^{r'-1}} h^*_k(t', \tau)\Big|_{\tau=t_o} a_{n-n'}(t_o)\, a^*_{n-n''}(t_o) \left[b_k^{n'-r}(t_o), b_k^{\dagger n''-r}(t_o)\right] \tag{273}$$

from the initial commutators. We have assumed in (273) that the $\{b_k(t_o), b^{\dagger}_k(t_o)\}$ commute between different k's. We shall also assume (210) in general.

For a given system described by (183) and a given two-time commutator (271) it is clear that both sides of (273) are specified which will not be equal in general. We need always to have

$$C_k(t, t) = 1. \tag{274}$$

By setting $t = t'$ in (273), the commutator (194) is again not preserved in general for a given (206). To see this in a simple example, consider the equation

$$\frac{db(t)}{dt} = -i\omega b - \frac{\gamma}{2} b; \qquad \gamma > 0$$

with the solution

$$b(t) = \exp\left(-i\omega t - \frac{\gamma}{2} t\right) b(0).$$

The corresponding commutator

$$[b(t), b^{\dagger}(t)] = e^{-\gamma t}$$

is therefore decaying, and violating the conservation of (194).

In general, the noise-source commutator (200) is determined by the condition (194), which amounts to solving the integral equation

$$1 = \int dt'dt'' \, h_k(t, t') \, h_k^*(t, t'') \left[F_k(t'), F_k^{\dagger}(t'') \right]. \tag{275a}$$

The two-time commutator (271) is then given by

$$\left[b_k(t), b_k^{\dagger}(t') \right] = \int dt''dt''' \, h_k(t, t'') \, h_k^*(t', t''') \left[F_k(t''), F_k^{\dagger}(t''') \right] \tag{275b}$$

One way to solve (275a) is to apply the eigenfunction expansion for $h_k(t, \tau)$

$$h_k(t, \tau) = \sum_n \frac{1}{\nu_n + \lambda_k} y_n(t) \, y_n(\tau) \, W_1(\tau). \tag{275c}$$

Alternatively, we may convert (275a) to a differential equation for $\left[F_k(t), F_k^{\dagger}(t') \right]$. In both cases the questions of existence and uniqueness of solutions, as well as methods for finding them explicitly, can be studied by conventional methods.[87-89] Note that the solution thus found depends on k in general, and hence the introduction of spatially non-white noise is necessary, even when the classical noise is δ-correlated in space. This possibility lies in the additional correlation (201) that we have quantum-mechanically, which is equal to (191) in the classical case.

We have not yet produced the general solution of (275a) and the corresponding evaluation of (275b) which, although not entirely straightforward, seem to be completely within reach of existing methods. In some cases, Eqs. 275a and 275b may be directly determined from the system Green's function, the information presumably being given classically. The connection of this general case with the following special cases will be commented upon later.

4.2.2 Markov Case

In this case the two-time commutators are determined by one-time commutators in

the following manner. Once we are assured of the preservation of (194), the commutator (271) follows from (234).

$$\left[b_k(t), b_k^\dagger(t')\right] = h_k(t, t'), \qquad t > t' \tag{276}$$

$$\left[b_k(t), b_k^\dagger(t')\right] = h_k^*(t', t), \qquad t' > t. \tag{277}$$

Therefore we have to choose

$$J_k'(t) = 2\{J_3^k(t) - J_2^k(t)\} \tag{278}$$

to satisfy

$$\int_{-\infty}^{t} d\tau \; |h_k(t, \tau)|^2 \, J_k'(\tau) = 1. \tag{279}$$

When $h_k(t, \tau)$ satisfies (227) it is easy to see that (279) is solved by

$$J_k'(t) = 2 \text{ Re } \Lambda_k(t). \tag{280}$$

The corresponding two-time field commutator is then

$$\left[\psi_{op}(\bar{r}, t), \psi_{op}^\dagger(\bar{r}', t')\right] = G(\bar{r}t; \bar{r}'t') \qquad t > t' \tag{281}$$

$$= G^*(\bar{r}'t'; \bar{r}t) \qquad t' > t, \tag{282}$$

the Green's function of the wave equation (183). It is important to note that with a given equation (183) or (206) the conditions (281)-(282) or (276)-(277) are necessary for the amplitudes $b_k(t)$ to be Markovian.

In many applications we may find that the real part of $\Lambda_k(t)$, the dissipative coefficients, is independent of k. It is then possible to have spatially white driving force $\mathscr{F}_{op}(\bar{r}, t)$ even in the quantum case. In general, when $J_k'(t)$ is k-dependent we are forced to deal with strictly spatially non-white noise sources.

4.2.3 Stationary Case

The noise correlations (256)-(257) in this case are computed from (258)-(259), which in turn are directly derived from a large conservative system in which the observables $\{Q_k(t), P_k(t)\}$ are defined.[66, 68, 106, 107] The commutation rules (250) are therefore automatically obeyed through (258) and (259). Explicit commutator rules will be given in Section I-E.

4.3 Classical Description of Quantum Field Propagation

The quantum Gaussian field $\psi_{op}(\bar{r}, t)$ that has been discussed thus far is specified completely by the mean $\langle \psi_{op}(\bar{r}, t)\rangle$, the covariances

$$\langle \psi'_{op}(\bar{r}, t)\psi'_{op}(\bar{r}', t')\rangle \tag{283}$$

$$\langle \psi'^{\dagger}_{op}(\bar{r}, t)\psi'_{op}(\bar{r}', t')\rangle, \tag{284}$$

and the commutator (189). It follows from (210) that

$$[\psi(\bar{r}, t), \psi(\bar{r}', t')] = 0. \tag{285}$$

A classical Gaussian field, on the other hand, is completely specified by the mean $\langle \psi(\bar{r}, t)\rangle$ and only the covariances

$$\langle \psi'(\bar{r}, t)\psi'(\bar{r}', t')\rangle \tag{286}$$

$$\langle \psi'^{*}(\bar{r}, t)\psi'(\bar{r}', t')\rangle. \tag{287}$$

The difference is that the commutator (189) is zero classically. If, however, an arbitrary function of the operators $\{\psi^{\dagger}(\bar{r}, t), \psi(\bar{r}, t)\}$ is always written in such a way that these operators appear in a chosen order, say, in the normal order, then the commutator (189) need not be invoked subsequently and our problem is very much like the c-number description. This idea of ordering has been substantially exploited.[70-74] We shall indicate how it can be used to provide a c-number description of our quantum fields.

Let $\{\beta_k(t)\}$ be the associated classical amplitudes of $\{b_k(t)\}$, obtained from normal ordering to be specific. Let $\psi(\bar{r}, t)$ be the associated amplitude of $\psi_{op}(\bar{r}, t)$, also for normal ordering. Then

$$\psi(\bar{r}, t) = \sum_k \phi_k(\bar{r})\, \beta_k(t). \tag{288}$$

Since the system is linear, the classical and quantum mean equations of motion are identical. This implies that $\psi(\bar{r}, t)$ obeys a wave equation with impulse response $G(\bar{r}, t; \bar{r}'t')$ which is the same as that of (237). To characterize $\psi(\bar{r}, t)$, we also need only to know (286)-(287), which we can take as (283)-(284). We have thus a classical field $\psi(\bar{r},t)$ whose properties are identical to the normal-ordered ones of $\psi_{op}(\bar{r}, t)$. To specify $\psi_{op}(\bar{r}, t)$ from $\psi(\bar{r}, t)$ we just need to know (189).

Therefore, with the commutator (189) given, we can develop the theory of linear quantum field propagation in an entirely classical manner as in Section I-B, by interpreting the classical averages as properly ordered quantum averages. Since the system is linear, such a classical description is not much simpler than the q-number description. Operator representations that we have discussed will be required in Section I-E. The virtue of a c-number description in our case is that it emphasizes the

close relation between a quantum and a classical theory of field transmission through a linear system. Since the quasi densities that we use extensively obey classical equations we are in effect employing a c-number description in many places. With the approach that we have described thus far it is not very important to distinguish q-number and c-number descriptions.

4.4 Quantum Classical Field Correspondence

We shall establish the connection that will enable us to write down the quantum field specification from a given classical field. (Remember that the only difference between quantum and classical fields in our case lies in the commutator (189).) In case this commutator, like other two-time correlations, is specified by one-time averages through the fluctuation-dissipation theorems, we need only establish a correspondence between one-time quantum and classical averages. When a unique one-time classical quantum transition is set up the complete field correspondence also follows.

It is worthwhile to emphasize that our aim is to give unique quantum channel specification from given classical specifications. Our quantum treatment is clearly appropriate for quantum channel representation, similarly to the classical case discussed in Section I-B. The quantum averages required for the specification, however, may be difficult to obtain, depending on individual cases. Therefore we give these quantum averages from the classical averages, which need to be given in any case for a classical specification. Our development is again conveniently classified in three cases.

4.4.1 General Case

We consider a general classical channel as described in section 2.1.1 (Part I) to be given, with amplitudes $\beta_k(t)$ obeying Eq. 16. We first ask what the quantum system should be corresponding to a given Eq. 16 and Eqs. 19-21. Some physical assumptions will be employed in this connection.

We assume that the system is linear both classically and quantum-mechanically, so that the classical and quantum equations of motion have the same form because no ordering ambiguity arises. Thus the quantum system will be described by the wave equation (183) with differential operators $\mathscr{L}_1$ and $\mathscr{L}_2$ identical to those of Eq. 1. This is equivalent to the assertion that the mean response of both systems is obtained through the same Green's function $G(\bar{r}t; \bar{r}'t')$. We then have an expansion (193), where each $b_k(t)$ obeys an equation (206), with $h_k(t, \tau)$ the same impulse response as that corresponding to Eq. 16. Furthermore, the solution $b_k(t)$ can be written explicitly as (207), corresponding to Eq. 29.

When $f_k(t)$ is Gaussian its third and higher order cumulants all vanish. It is therefore reasonable to choose $F_k(t)$ so that all higher cumulants of $F_k(t)$ taken in any time operator order are also zero. Such observables $F_k(t)$ are, according to Theorem 6, Gaussian quantum processes. Since the $f_k(t)$ are independent for different k, we should also choose the $F_k(t)$ to be mutually independent. We have therefore a

quantum system described precisely as (206) and (200)-(204) corresponding to Eqs. 29 and 19-21. We still have to establish the correlations (200)-(204) from those of Eqs. 20-21.

Let us first consider the correspondence between one-time variances. Since the $F_k(t)$ are independently Gaussian, the outputs $b_k(t)$ will also be independent Gaussian processes, according to Theorems 2 and 3. It follows that the quasi processes corresponding to $b_k(t)$ have one-time P-distributions given by

$$P\left(\beta_k^* \beta_k t\right) = \frac{1}{2\pi\sigma_k^* \sigma_k \sqrt{1 - r_{N_k}^2}} \exp\left\{ - \frac{1}{2\left(1 - r_{N_k}^2\right)} \left[\frac{\beta_k'^*(t)^2}{\sigma_k^{*2}} - \frac{2r_{N_k}}{\sigma_k^* \sigma_k} \beta_k'^*(t)\, \beta_k'(t) + \frac{\beta_k'(t)^2}{\sigma_k^2} \right] \right\}, \tag{289}$$

with

$$\sigma_k^2(t) = \langle [b_k'(t)]^2 \rangle = \left[\sigma_k^*(t) \right]^2 = \langle b_k'^\dagger(t)^2 \rangle^* \tag{290}$$

$$r_{N_k}(t) = \sigma_{N_k}^2 / \sigma_k^* \sigma_k \tag{291}$$

$$\sigma_{N_k}^2(t) = \langle b_k'^\dagger(t) b_k'(t) \rangle, \tag{292}$$

where a prime on the quantity denotes that the mean has been subtracted out and the time dependence of the quantities can be conveniently suppressed. Note that the averages (290)-(292) in the P-distribution (289) are the normal-ordered averages. We shall compare (289)-(292) with the given classical distribution:

$$p\left(\beta_k \beta_k^* t\right) = \frac{1}{2\pi\sigma_{c\ell}^{k*} \sigma_{c\ell}^k \sqrt{1 - r_{c\ell}^2}} \exp\left\{ - \frac{1}{2\left(1 - r_{c\ell}^{k^2}\right)} \left[\frac{\beta_k'^*(t)}{\sigma_{c\ell}^{k*2}} - \frac{2r_{c\ell}^k}{\sigma_{c\ell}^{k*} \sigma_{c\ell}^k} \beta_k'^*(t)\, \beta_k'(t) + \frac{\beta_k'(t)^2}{\sigma_{c\ell}^{k^2}} \right] \right\} \tag{293}$$

$$\sigma_{c\ell}^{k^2}(t) = \langle \beta_k'(t)^2 \rangle = \left[\sigma_{c\ell}^{*2}(t) \right]^* = \langle \beta_k'^*(t)^2 \rangle^* \tag{294}$$

$$r_{c\ell}^k(t) = \sigma_{c\ell}^k / \sigma_{c\ell}^{k*} \sigma_{c\ell}^k \tag{295}$$

$$\sigma_{c\ell}^{k^2}(t) = \langle \beta_k'^*(t) \beta_k'(t) \rangle. \tag{296}$$

The use of P-distribution in (289) has the distinct feature that the classical limit

of (292) is the function (296). In contrast,

$$\sigma^2_{A_k} = \langle b'_k(t) b'^{\dagger}_k(t) \rangle = \sigma_{N_k} + 1 \tag{297}$$

should not be directly related to (296).

Since the noise sources that we have dealt with thus far are the chaotic noise associated with the filter system, they can be expressed in thermal equilibrium in a special Gaussian form

$$p_n\left(\beta_k \beta^*_k t\right) \propto \exp\left\{ - \frac{\beta'^*_k(t)\, \beta'_k(t)}{\tilde{\sigma}^{k^2}_{c\ell}} \right\}. \tag{298}$$

Such a noise distribution arises from a canonical distribution with

$$\tilde{\sigma}^{k^2}_{c\ell} = \frac{k_B T}{\hbar\omega(k)}, \tag{299}$$

where T is the equilibrium temperature. If we wish, we can also let T be k-dependent. The corresponding quantum canonical distribution[131]

$$\rho\left(b_k, b^{\dagger}_k, t\right) \propto \exp\left\{ - \frac{b'^{\dagger}_k(t)\, b_k(t)}{\tilde{\sigma}^{k^2}_{c\ell}} \right\} \tag{300}$$

suggests the usual replacement of $\tilde{\sigma}^{k^2}_{c\ell}$ of (299) by the Bose-Einstein distribution

$$\bar{n}_k = \frac{1}{e^{1/\sigma^{k^2}_{c\ell}} - 1} \tag{301}$$

for $\sigma^{k^2}_N$. When we allow the system to be in instantaneous equilibrium with a temperature T(t) we have the relation

$$\sigma^2_{N_k}(t) = \frac{1}{e^{1/\tilde{\sigma}^{k}_{c\ell}(t)^2} - 1}. \tag{302}$$

Such a relation arises even when the same coefficients $\tilde{\sigma}^{k^2}_{c\ell}$ enter (299) and (300) because operator ordering is involved in going from (300) to a P-representation.

In the more general case (293) the Gaussian noise distribution admits more general interpretation than equilibrium thermal noise. It can be generally considered to be the chaotic noise with distribution function obtained by maximizing the system

entropy, subject to the constraints (294) and (296) in addition to normalization. Similarly, the noise density operator

$$\rho_k = N_k \exp\left\{\frac{b_k'^2}{2\left(1-r_k'^2\right)\sigma_k^{*2}}\right\} \exp\left\{\ln\left(1 + \frac{r_k'}{\left(1-r_k'^2\right)\sigma_k^*\sigma_k}\right) b_k'^\dagger b_k'\right\} \exp\left\{\frac{b_k'^2}{2\left(1-r_k'^2\right)\sigma_k^2}\right\} \tag{303}$$

is obtained by maximizing the quantum entropy, subject to normalization and (290)-(292). Equation 303 follows from Eq. 116 for a proper normalization constant N_k and with

$$r_k' = \frac{\sigma_{N_k}^2 + 1}{\sigma_k^*\sigma_k}. \tag{304}$$

In the two maximization problems above it is reasonable to set

$$\sigma_k^* = \sigma_{c\ell}^{k*}; \qquad \sigma_k = \sigma_{c\ell}^k \tag{305}$$

in the absence of other information. It is also reasonable to assume that the quantum-noise energy for mode k is given by

$$\hbar\omega(k)\,\bar{n}_k$$

so that (302) holds between $\sigma_{N_k}^2$ and $\tilde{\sigma}_{c\ell}^{k\,2}(t)$. With (302) and (305) our one-time correspondence is complete.

It is important to observe that the quantum-noise photon number in the general chaotic noise case, although still given by the Bose-Einstein form (302), may not allow the interpretation of $\tilde{\sigma}_{c\ell}^k(t)^2$ as in (299) with a time-variant temperature. In such a situation we cannot go to the classical limit readily, and (302) may not hold. When the chaotic noise energy distribution is thermal-like, so that (299) holds, our relation (302) becomes valid. In the other situations we can assume

$$\sigma_{N_k}^2 = \tilde{\sigma}_{c\ell}^{k\,2} \tag{306}$$

without further information.

Moreover, let us note that our unique one-time correspondence expressed by (305) and (302) or (306) is founded on two other assumptions, strictly speaking. The first is that the $F_k(t)$ are taken to be Gaussian. It is possible to construct higher cumulants of $F_k(t)$ which go to zero in the classical limit, in the sense of setting

$$\hbar \to 0 \tag{307}$$

or

$$\left(\frac{\hbar\omega}{k_B T}\right)^n \to 0 \qquad n \geq 2 \tag{308}$$

etc.

In this case the structure of the $F_k(t)$ is quite arbitrary and not necessarily Gaussian. The second is that expressions vanishing in the classical limits as (307) and (308) may be present in the right-hand side of (302), (305), and (306). These differences cannot be recognized in general, and the correspondence is therefore not unique in this sense. In the absence of specific information pertaining to individual problems, there is no way to improve our present treatment. Our Gaussian quantum-noise assumption would probably be retained in many cases for the sake of analytic simplicity. Furthermore, it may be possible to get more unique correspondence by imposing additional physical properties on the system, for example, properties of the reservoir.

Our argument giving the properties of $\{b_k(t), b_k^\dagger(t)\}$ at one time from the classical information may be regarded as a way of quantizing linear classical stochastic systems. We can adopt an alternative viewpoint in which our quantum field representation as described in section 4.1 is granted first. The one-time quantum variances would then be compared with the classical variances with the same results as for the other representation. The advantage of the latter approach is that it shows more clearly that our developments in section 4.1 always retain their meaning for quantum-field modeling, even in the absence of classical knowledge. The quantum averages can then be determined by measurements or by a full quantum calculation, depending on individual problems.

In this general case the output quantum field can be written

$$\psi_{op}(\bar{r}, t) = \int_{-\infty}^{t} dt' \int_{V_2} d\bar{r}\, G(\bar{r}t; \bar{r}'t')\left[E(\bar{r}', t') + \mathscr{F}_{op}(\bar{r}', t')\right]. \tag{309}$$

This can be compared with the classical given field

$$\psi(\bar{r}, t) = \int_{-\infty}^{t} dt' \int_{V_2} d\bar{r}\, G(\bar{r}t; \bar{r}'t')\left[E(\bar{r}'t') + \mathscr{F}(\bar{r}'t')\right]. \tag{310}$$

For a given classical $G(\bar{r}t; \bar{r}'t')$, $E(\bar{r}', t')$ and (286)-(287) we have our equation (309) with the same Green's function and excitation $E(\bar{r}, t)$. The mean in both cases is therefore the same. Furthermore, from (305) we have

$$\langle \psi'_{op}(\bar{r}, t)\psi'_{op}(\bar{r}, t)\rangle = \langle \psi'_{op}(\bar{r}, t)\psi'_{op}(\bar{r}', t)\rangle = \langle \psi'(\bar{r}, t)\psi'(\bar{r}', t)\rangle, \tag{311}$$

and when (306) holds

$$\langle \psi'^{\dagger}_{op}(\bar{r}, t)\psi'_{op}(\bar{r}', t)\rangle = \langle \psi'^{*}(\bar{r}, t)\psi'(\bar{r}', t)\rangle. \tag{312}$$

When (302) is valid we have to use a modal expansion

$$\langle \psi'^{\dagger}_{op}(\bar{r}, t)\psi'_{op}(\bar{r}', t)\rangle = \sum_k \phi^*_k(\bar{r})\, \phi_k(\bar{r}') \frac{1}{e^{1/\tilde{\sigma}^{k^2}_{c\ell}} - 1} \tag{313}$$

which may be expanded in a power series in $\tilde{\sigma}^{k^2}_{c\ell}$. The nature of $\mathscr{F}(\bar{r}, t)$ or $\mathscr{F}_{op}(\bar{r}, t)$ is not important, insofar as it gives an additive noise.

In this general case it is difficult to obtain multi-time correspondence in any unique fashion from the one-time results, even when the commutator (189) for $\psi_{op}(\bar{r}, t)$ is given. When (189) is not given, there is no way to find this commutator in general from the given classical information. With the one-time correspondence (311)-(313), in the absence of better choices, we can assume

$$\langle \psi'(\bar{r}, t)\psi'(r', t')\rangle = \langle \psi'(\bar{r}, t)\psi'(\bar{r}', t')\rangle \qquad t \neq t' \tag{314}$$

$$\langle \psi'^{\dagger}(\bar{r}, t)\psi'(\bar{r}', t')\rangle = \langle \psi'^{*}(\bar{r}, t)\psi'(\bar{r}', t')\rangle \qquad t \neq t'. \tag{315}$$

We have given the correspondence directly in terms of $\psi_{op}(\bar{r}, t)$ rather than $\mathscr{F}_{op}(\bar{r}, t)$ because the noise source is usually quite singular. Furthermore, correspondence in $\psi_{op}(\bar{r}, t)$ is more directly applicable to given classical additive noise specifications. If desired, we can also find the noise-source correlations from that of $\psi_{op}(\bar{r}, t)$. Since they are not needed in the present work we shall not pursue them here.

4.4.2 Markov Case

In the Markov case, the one-time correspondence (311)-(313) establishes a complete multi-time correspondence as follows. The commutator (189) is specified directly by the given Green's function $G(\bar{r}t; \bar{r}'t')$ as in (281)-(282). From Theorem 9 the relations (311) and (312) can be immediately generalized to read

$$\langle \underline{\psi}'_{op}(\bar{r}, t)\underline{\psi}'^{T}_{op}(\bar{r}, t)\rangle = \langle \underline{\psi}'(\bar{r}, t)\underline{\psi}'^{\dagger}(\bar{r}', t')\rangle. \tag{316}$$

For the case (302) we can also obtain the quantum covariances from (313) with Theorem 9. In this situation both the one-time and two-time quantum averages $\langle \psi^{\dagger}(\bar{r}, t)\psi(\bar{r}', t')\rangle$ are different from the given classical averages. As the quantum field is Gaussian, we have already arrived at a complete correspondence.

In this Markov case the classical and quantum diffusion coefficients can be compared more directly. With a given classical $\underset{\sim}{\phi}_k(t, t)$ we can obtain $\underset{\sim}{D}_k(t)$ readily by Eq. 60. With the correspondence (302) or (306) we find $\underset{\sim}{\phi}^{qt}_k(t, t)$ and $\underset{\sim}{D}'_k(t)$ follows from (236). Again we need not be explicit about such relations.

4.4.3 Stationary Case

In this case the quantum classical correspondence is most easily established. Complete characterization is given by Theorem 10. It is important to note that in this situation the classical specification can be given in terms of $G(\bar{r}t;\bar{r}'t')$ and only parameter T. We have a thermal-equilibrium steady state in general. The classical information is presumably given by (266), with $\bar{n}(\omega)$ replaced by $k_B T/\hbar\omega$. Note that a quantum system is Markov or stationary only if its classical limit is also Markov or stationary.

It is clear that with the prescription described here we can write down a quantum field specification corresponding to a given classical specification. Various communication configurations can then be formed. They will be treated, together with nondifferential filters, in Section I-E.

4.5 Conclusion

The basic idea of our approach is quite simple. To establish complete specification of a Gaussian quantum field $\psi_{op}(\bar{r},t)$ from the classical field, we need to compare normal-ordered quantum averages with the given classical averages. One-time averages can be compared by using a noise-energy distribution argument. Two-time quantum averages follow either from the one-time averages when fluctuation-dissipation theorems are available, or can be assumed to be the same as the classical averages. In any case, the commutator Eq. 189 has to be known. It is important to note that thus far only in the Markov or stationary cases have we been able to specify the commutator from the given classical information.

The necessity of introducing an operator noise source is not evident in our quantum classical comparison, but will be seen more explicitly later. This is required in general to insure that $\psi_{op}(\bar{r},t)$ has the proper commutator (189), which in turn is necessary for $\psi_{op}(\bar{r},t)$ to be a valid quantum operator.

Since it should be clear from Eqs. 275a and 275b that the two-time field commutator is determined by the system Green's function, it is interesting to inquire how the special cases result from imposing additional properties on the general case. In the author's opinion, the existence of fluctuation-dissipation theorems is closely connected with the conservation of commutators (194). In fact, energy conservation should be the basis for both. There should be more general fluctuation-dissipation theorems that take particularly simple forms in the Markov or stationary cases. Efforts to seek such results are certainly encouraging. Further discussion will be given in Appendix C.

E. GENERAL QUANTUM-CHANNEL REPRESENTATION

We shall give a general prescription for modeling quantum-mechanical communication systems, including arbitrary transmitter-receiver configurations, independent additive noise, and channel-dependent as well as signal-dependent noises. These factors will be studied separately but unified ultimately in a combined representation. A general yet simple procedure is then described for converting a given classical communication system to a quantum-mechanical representation. Examples of such treatment will be given in Section I-F.

We begin our consideration by generalizing the correspondence of Section I-D to channels described by stochastic differential equations.

5.1 Quantum Classical Correspondence for Stochastic Channels

Our stochastic channel is described by a stochastic differential equation

$$(\mathscr{L}_1+\mathscr{L}_2)\,\psi_{op}(\bar{r},t) = E(\bar{r},t) + \mathscr{F}_{op}(\bar{r},t) \tag{317}$$

with an associated random Green's function

$$G_R(\bar{r}t;\bar{r}'t'). \tag{318}$$

If we assume an expansion of the form of Eq. 82, our development in Section I-D remains largely valid by interpreting $h_k(t,\tau)$ and the relevant quantities as stochastic processes. With complete specification of $h_k(t,\tau)$ we can average the equations over the channel statistics and obtain whatever channel quantum total averages we want. We shall use the term <u>channel statistics</u> for the randomness in $G_R(\bar{r}t;\bar{r}'t')$ to distinguish from noise statistics that arise from $\mathscr{F}_{op}(\bar{r},t)$ and other independent additive noise.

There is an important difference, however, which we will show later in commutator conservation of the kind

$$[b, b^\dagger] = 1 \tag{319}$$

that cannot hold as a stochastic equation in general when $h_k(t,\tau)$ is random. Commutation-rule preservation can therefore only take the following form

$$\overline{[b, b^\dagger]} = 1 \tag{320}$$

after averaging over the channel. Similarly, the field commutation rule can only be interpreted as an average

$$\overline{\left[\psi_{op}(\bar{r},t), \psi^\dagger_{op}(\bar{r}',t')\right]} = \Sigma\ \phi(\bar{r})\ \phi(\bar{r})\ C(t,t') \tag{321}$$

$$\overline{\left[b_k(t), b_k^\dagger(t')\right]} = \delta_{kk'} C_k(t,t'). \tag{322}$$

Preservation of such commutators, in particular (320), is again required for quantum-mechanical consistency.

We shall establish, separately for the three cases that we treat, commutator (321) conservation and quantum classical field correspondence. Note that when the correlations of $\mathscr{F}_{op}(\bar{r}, t)$ are specified together with (318), our development in Section I-D can be immediately considered to be a proper description of quantum stochastic field transmission through a linear system.

5.1.1 General Case

Commutator preservation in this case can be achieved by solving the nonrandom $\left[F_k(t), F_k^\dagger(t')\right]$ from

$$C_k(t, t') = \overline{\left[b_k(t), b_k^\dagger(t')\right]} = \int_{-\infty}^{t} d\tau \int_{-\infty}^{t'} ds\, \overline{h_k(t, \tau)\, h_k^*(t', s)} \left[F_k(\tau), F_k^\dagger(s)\right]. \tag{323}$$

In the nonrandom case this amounts to solving an integral equation for a function of two independent variables.

Note that the commutator $\left[F_k(t), F_k^\dagger(t')\right]$ so determined is nonrandom and depends only on the channel statistics. In the deterministic channel case it may happen that the other correlations of $F_k(t)$, Eqs. 194-204, depend on $h_k(t, \tau)$. When $h_k(t, \tau)$ becomes random we shall have strictly random correlation functions for $F_k(t)$. To simplify the analysis, we will not consider the case of higher randomness and instead regard the correlations of $F_k(t)$ as given nonrandom functions.

The one-time quantum classical correspondence of section 4.4.1 (Part I) breaks down here because the additive noise in this case is the noise source $\mathscr{F}_{op}(\bar{r}, t)$ filtered through the random Green's function (318) in such a way that channel statistics plays a role. In such a situation it is more convenient to compare the correlations of $\mathscr{F}_{op}(\bar{r}, t)$ and $\mathscr{F}(\bar{r}, t)$. In the absence of better choices we have to equate the normally ordered average of $\mathscr{F}_{op}(\bar{r}, t)$ to that of $\mathscr{F}(\bar{r}, t)$.

Let us write

$$\psi_{op}(\bar{r}, t) = \int_{-\infty}^{t} dt \int_{1/2} d\bar{r}\, G_k(\bar{r}t; \bar{r}'t')\{E(\bar{r}, t) + \mathscr{F}_{op}(\bar{r}, t)\} \tag{324}$$

in the "signal plus noise" form

$$\begin{aligned}\psi_{op}(\bar{r}, t) = &\int_{t_o}^{t} dt' \int_{V_2} d\bar{r}\, \bar{G}_R(\bar{r}t; \bar{r}'t')\, E(\bar{r}', t') \\ &+ \int_{t_o}^{t} dt' \int_{V_2} d\bar{r}\, G_R'(\bar{r}t; \bar{r}'t')\, E(\bar{r}', t') \\ &+ \int_{-\infty}^{t} dt' \int_{V_2} d\bar{r}\, G_R(\bar{r}t; \bar{r}'t')\, \mathscr{F}_{op}(\bar{r}', t'),\end{aligned} \tag{325}$$

where

$$G_R'(\bar{r}t;\bar{r}'t') = G_R(\bar{r}t;\bar{r}'t') - \bar{G}_R(\bar{r}t;\bar{r}'t'). \tag{326}$$

The additive noise

$$n^{op}_{\mathscr{F}}(\bar{r},t) = \int_{-\infty}^{t} dt' \int_{V_2} d\bar{r}\, G_R(\bar{r}t;\bar{r}'t')\, \mathscr{F}_{op}(\bar{r}',t') \tag{327}$$

is still Gaussian, but may be correlated with the signal carrying "noise"

$$n_E(\bar{r},t) = \int_{t_o}^{t} dt' \int_{V_2} d\bar{r}\, G_R'(\bar{r}t;\bar{r}'t')\, E(\bar{r}',t'). \tag{328}$$

When $G(\bar{r}t;\bar{r}'t')$ is again given and normal-order averages of $\mathscr{F}_{op}(\bar{r},t)$ are identified with those of $\mathscr{F}(\bar{r},t)$, the properties of $\psi_{op}(\bar{r},t)$ are completely specified in the form (325) with (321) and $E(\bar{r},t)$ given.

The most crucial element in setting up a quantum field specification from a given classical specification is the derivation of (321) from the classical information. We have discussed in Section I-D and in Appendix C how we may be able to employ various analyses to derive (321) in general. In the absence of such knowledge, this field commutator has to be given, or we have to resort to the following cases.

5.1.2 Markov Case

In the Markov case (276)-(277) remain valid when both sides of the equations are interpreted as random processes. In fact, in such a case $\left[b_k(t), b_k^\dagger(t)\right]$ equals unity without the need of an average because the random process $h_k(t,\tau)$ was assumed to satisfy the deterministic initial condition (Eq. 42). If, however, we leave the commutator (189) and (211) random, we shall not be able to establish a photon operator nature for functionals of $\psi_{op}(\bar{r},t)$, as will be evident in section 5.4. In order not to deal with a random commutator it is sufficient for our purpose to require average conservation of a commutator like (321). It is then evident that

$$\overline{\left[b_k(t), b_k^\dagger(t')\right]} = \overline{h_k(t,t')}, \qquad t > t' \tag{329}$$

$$\overline{\left[b_k(t), b_k^\dagger(t')\right]} = \overline{h_k^*(t',t)}, \qquad t' > t \tag{330}$$

and the commutator

$$\left[F_k(t), F_{k'}^\dagger(t')\right] = \delta_{kk'}\delta(t-t')\, J_k'(t) \tag{331}$$

can be chosen to be nonrandom, and hence to satisfy

$$\int_{-\infty}^{t} d\tau \, \overline{|h_k(t,\tau)|^2} \, J_k(\tau) = 1. \tag{332}$$

Furthermore, from (281)-(282), we have

$$\overline{\left[\psi_{op}(\bar{r},t), \psi_{op}^{\dagger}(\bar{r}',t')\right]} = \bar{G}_R(\bar{r},t;\bar{r}'t') \qquad t > t' \tag{333}$$

$$= \bar{G}_R^*(\bar{r}t;\bar{r}'t') \qquad t' > t. \tag{334}$$

Similarly to the general case, we shall take diffusion coefficients of $F_k(t)$ that are nonrandom, although possibly dependent on the channel statistics. Moreover, one-time quantum classical correspondence will be obtained by equating normal-ordered diffusion coefficients to the given classical coefficients.

It is important to observe that the two-time averages are not as simply related to the one-time averages as they are in Theorem 9, which can only be generalized to read, say, for $t > t'$,

$$\overline{\langle \underline{n}_{op}(\bar{r},t)\underline{n}_{op}^T(\bar{r}',t')\rangle} = \int d\bar{r}'' \, \underset{\sim}{G}_R(\bar{r}t;\bar{r}''t')\overline{\langle \underline{n}_{op}(\bar{r}'',t')\underline{n}_{op}^T(\bar{r}',t')\rangle} \tag{335}$$

but not

$$\overline{\langle \underline{n}_{op}(\bar{r},t)\underline{n}_{op}^T(\bar{r}',t')\rangle} = \int d\bar{r}'' \, \bar{\underset{\sim}{G}}_R(\bar{r}t;\bar{r}''t')\overline{\langle \underline{n}_{op}(\bar{r}'',t')\underline{n}_{op}^T(\bar{r}',t')\rangle},$$

where

$$n_{op}(\bar{r},t) = \int G_R(\bar{r}t;\bar{r}'t') \, \mathscr{F}_{op}(\bar{r},t) \, d\bar{r}'.$$

The reason for this is that the one-time average $\langle \underline{n}_{op}(\bar{r},t)\underline{n}_{op}^T(\bar{r},t)\rangle$ depends also on $h_k(t,\tau)$, as is evident from Eq. 235. With a given specification of $G(\bar{r}t;\bar{r}'t')$ it is possible, however, to compute two-time averages from the one-time result through Eqs. 335 and 235.

When the classical and quantum diffusion coefficients are identical it is clear that the normal-ordered variances of $\psi_{op}(\bar{r},t)$ are the same as the classical variances before channel averaging. From (335) it follows that the normal-ordered covariances of $\psi_{op}(\bar{r},t)$ are also the same as the classical covariances. The antinormal covariance can be obtained through the normal one by using (333)-(334). It is more important that with (333) and (334) and given diffusion coefficients, our quantum Markov field is completely specified as (325). In contrast to the general case, it is significant that in this situation we know the field commutator from $\bar{G}(\bar{r}t;\bar{r}'t')$.

5.1.3 Stationary Case

Preservation of commutation rules is a simple matter in the stationary case. The noise source $\mathscr{F}_{op}(\bar{r},t)$, having a commutator

$$\left[\mathscr{F}_{op}(\bar{r},\omega), \mathscr{F}^{\dagger}_{op}(\bar{r}',\omega)\right] = 2\hbar \sum_k \phi_k(\bar{r})\, \phi_k(\bar{r}')\, \overline{\mathscr{L}^{I}_{k}(\omega)}, \tag{336}$$

preserves all of the commutation rules for $\mathscr{E}_{op}(\bar{r}, t)$. The correlations of $F_k(\omega)$ as given by Eqs. 74 and 75 would be random, however, when $\mathscr{L}^{I}_{k}(\omega)$ is random. In order not to deal with random correlations we can either assume $\mathscr{L}^{I}_{k}(\omega)$ to be nonrandom or set $\bar{n}(\omega) = 0$, so that we have no classical correlations.

In any case, the commutator $\overline{[Q_k(0), P_k(t)]}$ can be simply evaluated from

$$Q_k(0), P_k(t)] = i\hbar \frac{d}{dt} h_k(t) \tag{337}$$

$$\overline{[Q_k(0), P_k(t)]} = i\hbar \frac{d}{dt} h_k(t). \tag{338}$$

If we let

$$\dot{\mathscr{E}}_{op}(\bar{r}, t) = \sum_k \phi_k(\bar{r})\, P_k(t), \tag{339}$$

it follows from (338) that

$$\overline{[\mathscr{E}_{op}(\bar{r}, 0), \dot{\mathscr{E}}_{op}(\bar{r}', t')]} = i\hbar\, 2\, \overline{\frac{d}{dt} G_R(\bar{r}t; \bar{r}'0)} \tag{340}$$

so that the field commutator is determined.

The classical quantum correspondence can be set up in this case by proper identification of the system temperature T. In general we also have

$$\overline{\langle n^{\dagger}_{op}(\bar{r}, \omega)\, n_{op}(\bar{r}', \omega)\rangle} = 2\hbar\, \bar{n}(\omega)\, \mathrm{Im}\, \{-\bar{G}_R(\bar{r}\omega; \bar{r}'0)\} \tag{341}$$

$$\overline{\langle n_{op}(\bar{r}, \omega)\, n^{\dagger}_{op}(\bar{r}', \omega)\rangle} = 2\hbar\{\bar{n}(\omega)+1\}\, \mathrm{Im}\, \{-\bar{G}_R(\bar{r}\omega, \bar{r}'0)\} \tag{342}$$

for the signal-independent noise

$$n_{op}(\bar{r}, \omega) = \sum_k \phi_k(\bar{r})\, \frac{F_k(\omega)}{\mathscr{L}_k(\omega)}. \tag{343}$$

Since the essential difference between quantum and classical fields lies in the presence of commutators in the quantum case, we should recognize that Eqs. 333, 334, and 340 are of paramount importance in our quantum classical correspondence. This will become more apparent in our discussion of stochastic signals.

5.2 Stochastic Signals

Consider Eq. 317, and now take the excitation $E(\bar{r}, t)$ to be a random field. Let the mean of $E(\bar{r}, t)$ be denoted $\underset{\sim}{E}(\bar{r}, t)$, and

$$E'(\bar{r}, t) = E(\bar{r}, t) - \underset{\sim}{E}(\bar{r}, t). \tag{344}$$

Here we use a wavy underline to indicate stochastic signal averaging. We then have

$$(\mathscr{L}_1 + \mathscr{L}_2)\, \psi_{op}(\bar{r}, t) = \underset{\sim}{E}(\bar{r}, t) + \mathscr{F}_{op}(\bar{r}, t) + E'(\bar{r}, t) \tag{345}$$

which differs from (317) in the presence of an additional noise source $E'(\bar{r}, t)$. As in ordinary classical cases, the signal information may enter through this $E'(\bar{r}, t)$.

Since $E(\bar{r}, t)$ is completely classical, it causes no disturbance to the field commutator and the quantum classical correspondence. Our previous development can therefore include this case in a simple way. Similarly, another classical pure noise source $\mathscr{F}(\bar{r}, t)$ can also be included in (345).

Consider now the situation in which we have a wave equation

$$(\mathscr{L}_1 + \mathscr{L}_2)\, \psi_{op}(\bar{r}, t) = E(\bar{r}, t) + Q_{op}(\bar{r}, t) + \mathscr{F}_{op}(\bar{r}, t) + \mathscr{F}(\bar{r}, t), \tag{346}$$

where $Q_{op}(\bar{r}, t)$ is also an operator source with completely specified stochastic properties. We therefore have an operator stochastic signal. Let us define

$$Q'_{op}(\bar{r}, t) = Q_{op}(\bar{r}, t) - \langle Q_{op}(\bar{r}, t) \rangle \tag{347}$$

$$\tilde{E}(\bar{r}, t) = \underset{\sim}{E}(\bar{r}, t) + \langle Q(\bar{r}, t) \rangle \tag{348}$$

$$\tilde{\mathscr{F}}(\bar{r}, t) = \mathscr{F}(\bar{r}, t) + E'(\bar{r}, t) \tag{349}$$

$$\tilde{\mathscr{F}}_{op}(\bar{r}, t) = \mathscr{F}_{op}(\bar{r}, t) + Q'_{op}(\bar{r}, t) \tag{350}$$

so that (346) becomes

$$(\mathscr{L}_1 + \mathscr{L}_2)\, \psi_{op}(\bar{r}, t) = \tilde{E}(\bar{r}, t) + \tilde{\mathscr{F}}(\bar{r}, t) + \tilde{\mathscr{F}}_{op}(\bar{r}, t). \tag{351}$$

Suppose that we want to retain a given field commutator (321) for $\psi_{op}(\bar{r}, t)$, and in particular still wish to conserve this commutator. The commutator of $\tilde{\mathscr{F}}_{op}(\bar{r}, t)$ has then to be chosen as we chose $\mathscr{F}_{op}(\bar{r}, t)$ before. For a given $Q_{op}(\bar{r}, t)$ this is equivalent to a choice of the commutator for $\mathscr{F}_{op}(\bar{r}, t)$ through (350). In particular, when $\mathscr{F}_{op}(\bar{r}, t)$ or $Q_{op}(\bar{r}, t)$ are independent

$$\left[\mathscr{F}_{op}(\bar{r}, t), \mathscr{F}^{\dagger}_{op}(\bar{r}, t)\right] = \left[\tilde{\mathscr{F}}_{op}(\bar{r}, t), \tilde{\mathscr{F}}^{\dagger}_{op}(\bar{r}, t)\right] - \left[Q_{op}(\bar{r}, t), Q^{\dagger}_{op}(\bar{r}, t)\right]. \tag{352}$$

When we are restricted to Gaussian quantum noise so that $Q'_{op}(\bar{r}, t)$ is Gaussian there will be no distinction between operator stochastic signals and classical stochastic signals, as is evident from (351). Note that $\tilde{\mathscr{F}}_{op}(\bar{r}, t)$ may now contain signal information through $Q'_{op}(\bar{r}, t)$.

At this point is is worth noting that a Gaussian quantum noise source $\mathscr{F}_{op}(\bar{r}, t)$ can always be separated into an intrinsic quantum component plus a classical component

$$\mathscr{F}_{op}(\bar{r}, t) = \underset{\sim}{\mathscr{F}}_{op}(\bar{r}, t) + \mathscr{F}(\bar{r}, t) \tag{353}$$

with

$$\langle \underset{\sim}{\mathscr{F}}^{\dagger}_{op}(\bar{r}, t) \underset{\sim}{\mathscr{F}}_{op}(\bar{r}, t) \rangle = 0 = \langle \underset{\sim}{\mathscr{F}}_{op}(\bar{r}, t) \underset{\sim}{\mathscr{F}}_{op}(\bar{r}, t) \rangle \tag{354}$$

$$\langle \underset{\sim}{\mathscr{F}}_{op}(\bar{r}, t) \underset{\sim}{\mathscr{F}}^{\dagger}_{op}(\bar{r}, t) \rangle = \langle \mathscr{F}_{op}(\bar{r}, t) \mathscr{F}^{\dagger}_{op}(\bar{r}, t) \rangle \tag{355}$$

$$\langle \mathscr{F}^{*}(\bar{r}, t) \mathscr{F}(\bar{r}, t) \rangle = \langle \mathscr{F}^{\dagger}_{op}(\bar{r}, t) \mathscr{F}_{op}(\bar{r}, t) \rangle \tag{356}$$

$$\langle \mathscr{F}(\bar{r}, t) \mathscr{F}(\bar{r}, t) \rangle = \langle \mathscr{F}_{op}(\bar{r}, t) \mathscr{F}_{op}(\bar{r}, t) \rangle. \tag{357}$$

We are therefore putting the quantum nature, and in particular the commutator of $\mathscr{F}_{op}(\bar{r}, t)$, on the new source $\underset{\sim}{\mathscr{F}}_{op}(\bar{r}, t)$, whereas $\mathscr{F}(\bar{r}, t)$ carries the correlations that exist classically. It is now more apparent why an operator source $Q_{op}(\bar{r}, t)$ acts like a classical stochastic signal. In our following treatment the separation (353)-(357) has other conceptual advantages.

It is important to note that it is possible to have a prescribed commutator (319) disturbed by the introduction of an $Q_{op}(\bar{r}, t)$. In such a case we choose the commutator of $\mathscr{F}_{op}(\bar{r}, t)$ in (346) to get (321), which is then modified by $Q_{op}(\bar{r}, t)$. It is usually reasonable to retain the $b_k(t)$ as photon operators, and in particular to retain the commutators (333), (334), and (340) for the Markov and stationary cases. The situation is then just as described above.

5.3 Other Additive Noise and Noise Sources

We have now discussed both classical and operator noise sources added to the wave equation (346). These noise sources can be assumed to be independent, but they give rise to dependent additive noises through a random $G_k(\bar{r}t; \bar{r}'t')$. With properly specified statistics the output $\psi_{op}(\bar{r}, t)$ is completely defined. We can write

$$\psi_{op}(\bar{r}, t) = \int_{-\infty}^{t} dt' \int_{V_2} d\bar{r}' \, G_R(\bar{r}t; \bar{r}'t') \{\tilde{E}(\bar{r}', t') + \tilde{\mathscr{F}}(\bar{r}', t') + \tilde{\mathscr{F}}_{op}(\bar{r}', t')\}. \tag{358}$$

It is clear that other added classical noise sources can be lumped in the same manner. Further added quantum noise sources are effectively the same as classical noise sources, if we insist on a specified field commutator (321). The commutators of different quantum noise source components are therefore unimportant, as in the situation in Theorem 5.

It is possible that the added noise sources are not diagonal in $\phi_k(\bar{r})$, or stated

differently, do not have spatial modes $\phi_k(\bar{r})$ identical to those of the original noise sources. Analysis is more complicated, but the quantum nature of the situation is unchanged or known; the commutator (321) is either the same as before or changed in a specific way.

One can also add to (358) other independent additive noises

$$\psi_{op}(\bar{r},t) = \int_{-\infty}^{t} dt' \int_{V_2} d\bar{r}\, G_R(\bar{r}t;\bar{r}'t')\{\tilde{E}(\bar{r}',t') + \tilde{\mathscr{F}}(\bar{r}',t') + \tilde{\mathscr{F}}_{op}(\bar{r}',t')\}$$

$$+ n(\bar{r},t) + n_{op}(\bar{r},t). \tag{359}$$

The classical additive noise $n(\bar{r},t)$ clearly causes no trouble. The quantum noise $n_{op}(\bar{r},t)$ may modify (321), however. Again if we prescribe (321), the commutator for $\mathscr{F}_{op}(\bar{r},t)$ can be chosen to set (321) for arbitrary given $n_{op}(\bar{r},t)$. Here the situation is the same as for the introduction of $Q_{op}(\bar{r},t)$. The quantum classical correspondence is clear in the stochastic signal cases. When the commutator (321) is specified it is also clear in the case of additive noise (359). In particular, the correspondence (313) may apply to normal-ordered average of $n_{op}(\bar{r},t)$ other than (312).

It is important to note, however, that the additive noise $n_{op}(\bar{r},t)$ or $n(\bar{r},t)$ does not obey fluctuation-dissipation theorems, which are derived for Hamiltonian systems. Such theorems apply only to noise sources filtered through the Green's function of a differential equation. The quantum classical correspondence is still complete because we know the properties of this filtered noise from the fluctuation-dissipation theorems and the properties of additive noise that are given.

5.4 Quantum Classical Correspondence for Nondifferential Filter Channels

A general nondifferential system as discussed in section 2.2 (Part I) can be expressed as

$$\psi_{op}(\bar{r},t) = \int G_R(\bar{r}t;\bar{r}'t')\{E(\bar{r}',t') + \mathscr{F}(\bar{r}',t')\}\, d\bar{r}'dt' + n_{op}(\bar{r},t) + n(\bar{r},t) \tag{360}$$

for a possibly random filter $G_R(\bar{r}t;\bar{r}'t')$ that does not arise from a differential equation. The signal $E(\bar{r},t)$, which may be stochastic, is a classical field. The additive noise contains an operator, as well as a c-number component. The commutator (321) is given by that of $n_{op}(\bar{r},t)$.

In this case it is clear that quantum classical correspondence can be obtained as before with the important difference that the commutator (321), or equivalently that of $n_{op}(\bar{r},t)$, has to be given. When only classical information on (360) is given there is no way, as in our general case, to tell (321). Since the commutator (321) is extremely important in the quantum representation, it is unfortunate that it cannot be related to $G_R(\bar{r}t;\bar{r}'t')$. In our general case it may still be possible, as discussed before, to

relate (321) to $G_R(\bar{r}t;\bar{r}'t')$. In this nondifferential case, on the contrary, there is no way to find (321). It is clear that the fields $\psi_{op}(\bar{r},t)$ ultimately have to obey differential equations from the laws of physics, and we have to go back to the physical situation in which we approximate the system as (360) to see what kind of differential system it may come from. This implies that for transition to quantum description the communication system should be described from the viewpoint of physical differential equations. Further discussion of classical quantum transition will be made later.

5.5 Channel Representation for Different Receiver-Transmitter Configurations

We shall now show how different channel models emerge from different types of receiver-transmitter configurations. Generality and flexibility of the possibilities are discussed, and some simple examples are given.

5.5.1 Theory of Receiver Input Representation

Suppose that a field $\psi_{op}(\bar{r},t)$ is given in the general form (358) with known (321). Consider the linear functionals of $\psi_{op}(\bar{r},t)$

$$a = \int_{V_r V_t} d\bar{r}dt\, W(\bar{r},t)\, \psi_{op}(\bar{r},t) \tag{361}$$

$$a^\dagger = \int_{V_r V_t} d\bar{r}dt\, W^*(\bar{r},t)\, \psi^\dagger_{op}(\bar{r},t). \tag{362}$$

We are interested in determining the density operator that gives the outcome probabilities for measurements of observables that are functions of a and $a^\dagger$. It is clear that (361)-(362) represent completely general linear functionals of $\psi_{op}(\bar{r},t)$ and $\psi^\dagger_{op}(\bar{r},t)$ by various choices of $W(\bar{r},t)$ including generalized functions. We can therefore first develop a general representation for such $(a, a^\dagger)$ and later specialize to different measurements corresponding to particular $W(\bar{r},t)$.

The function $W(\bar{r},t)$ and the range of observation $\{V_r, V_t\}$ reflect the receiver configuration in this case. The range

$$\{V_r, V_t\} \tag{363}$$

specifies the region of space and time in which we observe the output signal $\psi_{op}(\bar{r},t)$ of the channel. In particular, V_r gives the physical size of the receiver. The function $W(\bar{r},t)$ can be chosen for convenience of observation. Note that a and $a^\dagger$ are in general space-time-dependent. When

$$W(\bar{r},t) = \delta(\bar{r}-\bar{r}_o)\, \delta(t-t_o) \tag{364}$$

we are observing the field directly. When $W(\bar{r},t)$ is constant we are observing the field integrated over a given space-time region (363). The transmitter configuration is

given by the domain of the excitation $E(\bar{r}, t)$. We shall eventually discuss the class of measurements included in such a description, and also the problem of measurement probability calculation for a given observable incorporating the receiver configuration.

We shall first discuss the actual implementation of the integrals of (361) and (362). For a given $W(\bar{r}, t)$ there may be many physical ways of actually realizing the integrals. The essential problem is to determine whether additive noise has been introduced in such realizations. For different specific implementations there is no general way to tell the nature of the additive noise if it has been introduced. In practical applications we have to investigate the actual receiver action on the field.

There is, however, a rather general approach by which the integrals (361) and (362) can be realized and the corresponding additive noise determined. This involves passing $\psi_{op}(\bar{r}, t)$ *through a matched filter* $H(\bar{r}t; \bar{r}'t')$ *defined for a given* $W(\bar{r}, t)$, by

$$H(\bar{r}t; \bar{r}'t') = H(\bar{r}-\bar{r}'; t-t')$$

$$= 0 \qquad \begin{cases} \bar{R} - \bar{r} + \bar{r}' \notin V_r \\ T - t + t' \notin V_t \\ \bar{r} < \bar{r}' \\ t < t' \end{cases}$$

$$= W(\bar{R}-\bar{r}+\bar{r}'; T-t+t') \qquad \text{otherwise.} \tag{365}$$

This filter is space-time-invariant and its output sampled at $t = T$ and $\bar{r} = \bar{R}$ is

$$a = \int_{-\infty}^{\infty} W(\bar{r}, t)\ \psi_{op}(\bar{r}, t)\ d\bar{r}dt \tag{366}$$

in the absence of additive noise. Since the filter is zero in the proper region, the a of (366) is the same as that of (361).

For this specific implementation of the integral (361)-(362) the minimum noise that need be introduced is given by the fluctuation-dissipation-amplification theorems of Appendix C. In order that the fluctuation-dissipation-amplification theorems apply, we must be able to interpret the filter $H(\bar{r}-\bar{r}'; t-t')$ as the Green's function of a differential equation. Detailed discussion of such attenuation or amplification systems will be omitted here. The important point in this connection is that no additive noise need be introduced if the integrals (361)-(362) do not correspond to amplification of $\psi_{op}(\bar{r}, t)$. In case amplification is involved, a noise will be added to (361)-(362) which is specified by Eqs. C. 2, C. 3, and C. 4. Since the a of (361) is related linearly to $\psi_{op}(\bar{r}, t)$, it appears that our fluctuation-amplification theorem provides the limit noise required in any implementation of the integrals.

Generalizing (361)-(362), we therefore write

$$a = \int_{V_r V_t} d\bar{r}dt\ W(\bar{r}, t)\ \psi_{op}(\bar{r}, t) + n_{op} \tag{367}$$

$$a^\dagger = \int_{V_r V_t} d\bar{r}dt\ W^*(\bar{r},t)\ \psi_{op}(\bar{r},t) + n^\dagger_{op}, \tag{368}$$

where n_{op} can vanish, depending on $W(\bar{r},t)$. The n_{op}, which is independent of $\psi_{op}(\bar{r},t)$, is now assumed to be given. The commutator

$$\overline{[a, a^\dagger]} = \int d\bar{r}d\bar{r}'dtdt'\ W(\bar{r},t)\ W^*(\bar{r}',t')\ \overline{\left[\psi_{op}(\bar{r},t), \psi^\dagger_{op}(\bar{r}',t')\right]} + [n, n^\dagger] \tag{369}$$

can be calculated from (321), given $W(\bar{r},t)$ and $[n, n^\dagger]$. Let us first assume that

$$\overline{[a, a^\dagger]} = 1 \tag{370}$$

so that a can be interpreted as a photon operator averaged over the channel. Suppose, first, that the channel is fixed. Since $\psi_{op}(\bar{r},t)$ and n_{op} are Gaussian, we have also a Gaussian a, from Theorem 2. Let α and α^* be the associated classical amplitude of a and $a^\dagger$. We can then form the distribution

$$P(\alpha, \alpha^*) = \frac{1}{2\pi\sigma^*_\alpha\sigma_\alpha\sqrt{1 - r^2_{N_\alpha}}} \exp\left\{-\frac{1}{2\left(1-r^2_{N_\alpha}\right)}\left(\frac{\alpha'^{*2}}{\sigma^{*2}_\alpha} - \frac{2\alpha'^*\alpha' r_{N_\alpha}}{\sigma^*_\alpha\sigma_\alpha} + \frac{\alpha'^2}{\sigma^2_\alpha}\right)\right\}, \tag{371}$$

where

$$\alpha' = \alpha - \int_{V_r V_t} d\bar{r}dt \int_{-\infty}^{t} dt' \int_{V_2} d\bar{r}'\ W(\bar{r},t)\ G_R(\bar{r}t;\bar{r}'t')\ \tilde{E}(\bar{r},t) \tag{372}$$

$$\sigma^2_\alpha = \langle \alpha'^2 \rangle = \left(\sigma^{*2}_\alpha\right)^*$$

$$= \int_{V_r V_t} W(\bar{r},t)\ W(\bar{r}',t')\ d\bar{r}'dt'\ \langle \psi'_{op}(\bar{r},t)\psi'_{op}(\bar{r}',t')\rangle + \langle n^2_{op}\rangle \tag{373}$$

$$\sigma^2_{N_\alpha} = \langle \alpha'^*\alpha' \rangle$$

$$= \int_{V_r V_t} W^*(\bar{r},t)\ W(\bar{r}',t')\ d\bar{r}'dt'\ \langle \psi^\dagger_{op}(\bar{r},t)\psi'_{op}(\bar{r}',t')\rangle + \langle n^\dagger_{op} n_{op}\rangle \tag{374}$$

$$r_{N_\alpha} = \sigma^2_{N_\alpha} / \sigma^*_\alpha\sigma_\alpha \tag{375}$$

$$\psi'_{op}(\bar{r},t) = \psi_{op}(\bar{r},t) - \int_{-\infty}^{t} dt' \int_{V_2} d\bar{r}'\ G_R(\bar{r}t;\bar{r}'t')\ \tilde{E}(\bar{r}',t'). \tag{376}$$

For a fixed deterministic channel with nonrandom $G_R(\bar{r}t;\bar{r}'t')$, the distribution (371)

is the P-representation of the density operator $\rho(a, a^\dagger)$ that we seek to determine. The reason for this is that a, the linear transformation of $\psi_{op}(\bar{r}, t)$, also possesses a complete set of eigenstates. Together with $[a, a^\dagger] = 1$, it is sufficient for

$$\rho(a, a^\dagger) = \int d^2\alpha \, |\alpha\rangle \langle \alpha| \, P(\alpha, \alpha^*). \tag{377}$$

An explicit demonstration is given in Appendix G.

When $G_R(\bar{r}t; \bar{r}'t')$ becomes random the condition (370) allows us to interpret

$$\bar{P}(\alpha, \alpha^*) = \int P(\alpha, \alpha^*) \, p\left(g^k_{mn}\right) \, dg^k_{mn} \tag{378}$$

as the P-representation for the channel-averaged density operator $\bar{\rho}(a, a^\dagger)$ describing measurement probabilities of functions of $(a, a^\dagger)$ derived from a random channel. In Eq. 381 we shall assume that the random filter $G_R(\bar{r}t; \bar{r}'t')$ is given in the form of Eq. 84 with a joint distribution $p\left(g^k_{mn}\right)$ for the random coefficients $\{g^k_{mn}\}$.

Similarly, for a set $\{k\}$, we have

$$a_k = \int_{V_r V_t} \psi_{op}(\bar{r}, t) \, W_k(\bar{r}, t) \, d\bar{r}dt + n^k_{op}, \tag{379}$$

with

$$\overline{\left[a_k, a^\dagger_{k'}\right]} = \delta_{kk'} \tag{380}$$

$$\overline{[a_k, a_{k'}]} = 0. \tag{381}$$

For a fixed channel the joint P-distribution $P(\underline{\alpha}, \underline{\alpha})$ for the associated classical amplitudes $\{\alpha_k, \alpha^*_k\}$ can be directly calculated for any order among the a_k, as they are jointly Gaussian. The parameters in $P(\underline{\alpha}, \underline{\alpha}^*)$ are determined from the statistics of $\psi_{op}(\bar{r}, t)$ and n_{op}. We summarize this in the following theorem.

<u>Theorem 11</u>

The distribution

$$\bar{P}(\underline{\alpha}, \underline{\alpha}^*) = \int P(\underline{\alpha}, \underline{\alpha}^*) \, p\left(g^k_{mn}\right) \, dg^k_{mn} \tag{382}$$

is the P-representation of the density operator describing measurements of observables that are functions of $\underline{a}, \underline{a}^\dagger$, where $\underline{a} = \{a_k\}$ denotes the set of operators $\{a_k\}$ of (379)-(381) collectively, and $\underline{\alpha}$ is the associated amplitudes of $\underline{a}$.

Note that according to Theorem 11, the density operator $\rho(\underline{a}, \underline{a}^\dagger)$ can be constructed only from given statistical specification of $\psi_{op}(\bar{r}, t)$ in the normal order, together with the commutator (321). See Appendix G for a more detailed elaboration of this possibility.

When the a_k do not commute for different k,

$$[a_k, a_{k'}] \neq 0, \qquad k \neq k'$$

$$\left[a_k, a_{k'}^\dagger\right] \neq 0, \qquad k \neq k'$$

the density operator $\rho(\underline{a}, \underline{a}^\dagger)$ may not be simply related to the $P(\underline{\alpha}, \underline{\alpha}^*)$ calculated in this manner. In this case a specification of $\psi_{op}(\bar{r}, t)$ in terms of its modal amplitude density operators will be necessary. (See Appendix G.)

It may turn out that we have operators $(a, a^\dagger)$, as given by (367) and (368), which have

$$[a, a] \neq 1 \tag{383}$$

$$\overline{[a, a^\dagger]} \neq 1. \tag{384}$$

In such a case we cannot interpret a distribution like (371) as the P-representation of $\rho(a, a^\dagger)$, but proper scaling of the variables a to insure (370) can be achieved, since (383)-(384) are c-numbers. The resulting P-distribution so constructed would in general be quite different from (371). The case of many operators $\underline{a}$ can be handled similarly.

It is now clear that the commutator (321) is needed for construction of the density-operator representation $\rho(\underline{a}, \underline{a}^\dagger)$. The specific form of $\bar{P}(\underline{\alpha}, \underline{\alpha}^*)$ is influenced greatly by different commutators (321).

Let us now consider what class of measurements has been included in (384). Consider measurement of an observable

$$\theta\left(\psi_{op}(\bar{r}, t), \psi_{op}^\dagger(\bar{r}, t)\right)$$

which is an arbitrary function of $\psi_{op}(\bar{r}, t)$ and $\psi_{op}^\dagger(\bar{r}, t)$. The receiver configuration is now built into the form of $\theta\left(\psi_{op}, \psi_{op}^\dagger\right)$. When $\theta\left(\psi_{op}, \psi_{op}^\dagger\right)$ is a nonlinear function of $\psi_{op}(\bar{r}, t)$ a function $W(\bar{r}, t)$ may not exist such that $\theta\left(\psi_{op}, \psi_{op}^\dagger\right)$ can be expressed in terms of a and $a^\dagger$ only. With a set a_k of (384) the observables $\theta\left(\psi_{op}, \psi_{op}^\dagger\right)$ can be expressed, under some broad conditions, in terms of a_k through ψ_{op}, when ψ_{op} is expandable in terms of a_k. In this case we can form density-operator representations for the a_k and then calculate the measurement probability for $\theta(\underline{a}, \underline{a}^\dagger)$. This procedure is inconvenient, and simpler methods may be available depending on particular $\theta\left(\psi_{op}, \psi_{op}^\dagger\right)$ and the statistics of $\psi_{op}(\bar{r}, t)$. We are unable to develop a simple convenient procedure comparable to the one above which applies when the receiver structure is reflected in the $W_k(\bar{r}, t)$.

To illustrate the situation further, let us consider the following energy measurement

which is frequently employed in practice. Here we make a direct measurement of N, where

$$N = \int \psi_{op}^{\dagger}(\bar{r}, t)\, \psi_{op}(\bar{r}, t)\, W(\bar{r}, t)\, d\bar{r}dt.$$

This variable N cannot be readily expressed in terms of a and $a^{\dagger}$ of (361)-(362) in general. When we expand $\psi_{op}(\bar{r}, t)$ in terms of a_k, N can also be given in terms of $\underline{a}$, but the resulting probability calculation for measurement from $\rho(\underline{a}, \underline{a}^{\dagger})$ is inconvenient. In the presence of other information, for example, when $\psi_{op}^{\dagger}(\bar{r}, t)\, \psi_{op}(\bar{r}, t)$ has Poisson-distributed eigenvalues, we can make a direct calculation of measurement probabilities without using $\rho(\underline{a}, \underline{a}^{\dagger})$.

We wish to point out here that under general conditions we can always find a set $\{a_k\}$ describing the field $\psi_{op}(\bar{r}t)$ completely in a convenient manner. That is, there exists a canonical representation for the receiver input field

$$\psi_{op}(\bar{r}, t) = \sum_k a_k \phi_k(\bar{r}, t), \tag{385}$$

where $\phi_k(\bar{r}, t)$ is proportional to the eigenfunction of a linear integral equation whose kernel is

$$\overline{\left[\psi_{op}(\bar{r}t), \psi_{op}^{\dagger}(\bar{r}', t')\right]}$$

so that (380) and (381) hold. When the joint variances of $\{a_k\}$ factorize in any order, we have a set of independent quantum observables $\{a_k\}$ which specifies $\psi_{op}(\bar{r}, t)$ in much the same way as the coefficients in a Karhunen-Loève expansion of a classical random field. In particular, the density operators of each mode a_k, which play the role of probability densities for the coefficients in the classical case, can be calculated in the way described above. Any set $\{a_k'\}$ that does not obey (380) can still be considered as a linear combination of the $\{a_k\}$ in (385) so that the representation applies to any receiver configuration. This canonical quantum description thus parallels the "covariance function-impulse response" type,[12] which is a common approach to classical detection and estimation problems, although our system is described in a "state-variable-differential-equation" approach.

As the transmitter configuration is contained entirely in the form of the excitation $E(\bar{r}, t)$, our complete system representation

$$\psi_{op}(\bar{r}, t) = \int G_R(\bar{r}t; \bar{r}'t')\left[E(\bar{r}', t') + \mathscr{F}_{op}(\bar{r}', t')\right] d\bar{r}'dt' + \ldots$$

fully parallels the ordinary classical channel description. Note that an explicit physical field description in the H-picture is required for such parallelism.

Our procedure makes it evident that we can form a variety of density operator representations for different types of measurements. In general, any receiver configuration

can be treated at the expense of complications in analysis. This important feature makes it possible for us to study the optimal receiver measurement for any given receiver size. Before studying these questions we want first to give some simple examples illustrating our procedure.

5.5.2 Examples

Let us first consider the case

$$a_k = b_k(t) = \int_{V_2} \underline{\psi}_{op}(\bar{r}, t)\, \phi_k^*(\bar{r})\, d\bar{r}. \tag{386}$$

Each $b_k(t)$ has a P-distribution of the form

$$P_k\left(\beta_k, \beta_k^*, t\right) = \frac{1}{2\pi\sigma^*_{\beta_k}\sigma_{\beta_k}\sqrt{1 - r^2_{N_{\beta_k}}}}$$

$$\times \exp\left\{-\frac{1}{2\left(1 - r^2_{N_{\beta_k}}\right)}\left(\frac{\beta_k'^{*2}}{\sigma^{*2}_{\beta_k}} - \frac{2r_{N_{\beta_k}}}{\sigma^*_{\beta_k}\sigma_{\beta_k}}\beta_k'^*\beta_k' + \frac{\beta_k'^2}{\sigma^2_{\beta_k}}\right)\right\}, \tag{387}$$

with

$$\sigma^{*2}_{\beta_k} = \left\langle\left[b_k^\dagger(t) - \int h_k^*(t,\tau)\, e_k^*(\tau)\, d\tau\right]^2\right\rangle = \left(\sigma^2_{\beta_k}\right)^* \tag{388}$$

$$\sigma^2_{N_{\beta_k}} = \left\langle\left[b_k^\dagger(t) - \int h_k^*(t,\tau)\, e_k^*(\tau)\, d\tau\right]\left[b_k(t) - \int h_k(t,\tau)\, e_k(\tau)\, d\tau\right]\right\rangle \tag{389}$$

$$r^2_{N_{\beta_k}} = \frac{\sigma^2_{N_{\beta_k}}}{\sigma^*_{N_{\beta_k}}\sigma_{N_{\beta_k}}}. \tag{390}$$

The total density operator is

$$\rho(\underline{b}, \underline{b}^\dagger) = \prod_k \rho_k = \mathscr{A} \prod_k P_k\left(\beta_k, \beta_k^*, t\right). \tag{391}$$

This density operator describes one-time measurement of observables that are functions of $b_k(t)$. Since $\phi_k(\bar{r})$ is defined in the spatial region from the transmitter to the receiver, it is clear that such $b_k(t)$ would never be really measured, and we should find

density-operator representations for more realistic measurements.

For this purpose, we assume that

$$\langle \psi_{op}(\bar{r}, t)\rangle = 0 \qquad \bar{r} \notin V_2'(t) \tag{392}$$

and expand

$$\psi_{op}(\bar{r}, t) = \sum_k \theta_k(\bar{r})\, a_k(t) \qquad \bar{r} \in V_2' \tag{393}$$

$$= \psi_{op}^c(\bar{r}, t) \qquad \bar{r} \notin V_2'. \tag{394}$$

The spatial region $V_2'(t)$ for which the mean output field is nonzero may be time-dependent. We also assume, for simplicity, that $\theta_k(\bar{r})$ are real orthonormal functions over $V_2'(t)$ so that $\theta_k(\bar{r})$ actually also carries a time dependence. We have

$$a_k(t) = \int_{V_2'} \psi_{op}(\bar{r}, t)\, \theta_k(\bar{r})\, d\bar{r} \tag{395}$$

so that

$$\langle a_k(t)\rangle = \int_{V_2'} \theta_k(\bar{r})\, d\bar{r} \int_{V_2} d\bar{r}' \int_0^t dt'\, G(\bar{r}t; \bar{r}'t')\, E(\bar{r}', t') \tag{396}$$

$$\langle a_{k_1}'^{\dagger} a_{k_2}\rangle = \sum_{k_3 k_4} \int_{V_2'} d\bar{r} d\bar{r}'\, \theta_{k_1}(\bar{r})\, \theta_{k_2}(\bar{r}')\, \phi_{k_3}^*(\bar{r})\, \phi_{k_4}(\bar{r}')\langle b_{k_3}'^{\dagger}(t) b_{k_4}'(t)\rangle$$

$$\cong \langle b'^{\dagger}(t) b'(t)\rangle \sum_k \int_{V_2'} d\bar{r} d\bar{r}'\, \theta_{k_1}(\bar{r})\, \theta_{k_2}(\bar{r}')\, \phi_{k_3}^*(\bar{r})\, \phi_{k_3}(\bar{r}')$$

$$= \delta_{k_1 k_2} \langle b'^{\dagger}(t) b'(t)\rangle. \tag{397}$$

We have made the approximation

$$\langle a_k'^{\dagger}(t) a_k'(t)\rangle \cong \delta_{kk'} \langle b'^{\dagger}(t) b(t)\rangle, \tag{398}$$

or equivalently

$$h_k(t, \tau) \cong h(t, \tau) \qquad \text{independent of } k.$$

Similarly, it is easy to show that

$$[a_{k'}(t), a_k^{\dagger}(t)] = \delta_{kk'} \tag{399}$$

$$[a_{k'}(t), a_k(t)] = 0 \tag{400}$$

$$\langle a'_k(t) a'_{k'}(t)\rangle = \delta_{kk'} \langle b_k(t) b_{k'}(t)\rangle. \tag{401}$$

It is clear that $a_k(t)$ is the photon operator $b_k(t)$ restricted to the spatial region $V'_2(t)$. A density operator $\rho(\underline{a}, \underline{a}^\dagger)$ then results which describes measurement of $b_k(t)$ in the interval $V'_2(t)$. We shall not write down the explicit form here, since it is a product of Gaussians. Note that since $V'_2(t)$ can be of measurable size, we have a description that is more realistic than the previous $\rho(\underline{b}, \underline{b}^\dagger)$.

It is worthwhile to observe that with the approximation (398) we can make a random variable transformation to express the product distribution $\prod_k P_k\left(\beta_k, \beta_k^*, t\right)$ of (391) in terms of $\{\alpha_k, \alpha_k^*\}$, the associated classical amplitudes of $\{a_k, a_k^\dagger\}$. The resulting distribution differs from the one corresponding to $\{\alpha_k, a_k^*\}$ by a factor

$$\exp\left\{-\frac{1}{2} \int_{\bar{r} \notin V'_2} d\bar{r}\, \underline{\psi}^\dagger_{op}(\bar{r}, t)\, \underset{\sim}{\phi}^{-1} \underline{\psi}^c_{op}(\bar{r}, t)\right. \tag{402}$$

which corresponds to the field $\psi_{op}(\bar{r}, t)$ outside $V'_2(t)$.

In these examples the total density operator is an infinite product of many component density operators and is therefore quite untractable. Assume that we have a situation of digital communication with a total number M of messages $\{i\}$. For a specific set of input excitation $E_i(\bar{r}, t)$ the mean output

$$\langle \psi^i_{op}(\bar{r}, t)\rangle = \sum_{n=1}^{M} C_n \langle a_n(i)\rangle\, \xi_n(\bar{r}, t) \qquad i = 1, \ldots, M \tag{403}$$

can be expanded in terms of only M orthonormal functions $\{\xi_n(\bar{r}, t)\}$. The signal information can then be obtained by observing functions of an infinite set

$$a_n = \frac{1}{C_n} \int \psi_{op}(\bar{r}, t)\, \xi_n(\bar{r}, t)\, d\bar{r}dt \qquad n = 1, \ldots, M. \tag{404}$$

By proper choice of the i-independent constants C_n, we can have

$$\left[a_n, a_n^\dagger\right] = 1 \qquad n = 1, \ldots, M \tag{405}$$

so that a joint P-distribution for M amplitudes $\{\alpha_n\}$ can be readily found. The resulting density operator should be much simpler than the operator like (391). Employing (if possible) Karhunen-Loève expansions of the type given in Section I-C, we can construct other simple receiver input representations. We shall not give the details of such a development here.

We will now consider the following question: Which 'optimal' measurement is more

optimum, the one derived from (391) or the one based on (404)?

5.6 Relative Optimality of Different Receiver Configurations

The optimality that we are talking about is that of communication system performance. We use criteria that are functions of the receiver input density operators and the message statistics. We shall first establish a means of judging whether a loss of optimality has occurred for a given receiver configuration. This criterion will be a quantum-mechanical version of the theorem of irrelevance[10] for density operators.

For this purpose, let ρ_ψ^s be the total channel output density operator corresponding to the signals with subsystem density operators

$$\rho_{\psi_1}^s = \mathrm{tr}_2\, \rho_\psi^s \tag{406}$$

$$\rho_{\psi_2}^s = \mathrm{tr}_1\, \rho_\psi^s \tag{407}$$

which describe measurements of observables $\underline{\overline{X}}_1$ and $\underline{\overline{X}}_2$ of subsystems 1 and 2, respectively. As in the classical case, we want to find the condition under which measurements of any subsystem 2 observables furnish no further information about the signal S, given that any measurement of $\underline{\overline{X}}_1$ has been made. For this to hold, we must demand that the conditional probability of measured x_2 given measured x_1 for input signal S,

$$p_s(x_2 | x_1), \tag{408}$$

be independent of S for all subsystem observables $\underline{\overline{X}}_1$ and $\underline{\overline{X}}_2$. The probability (408) can be computed straightforwardly

$$p_s(x_2 | x_1) = \frac{\langle x_1 | \langle x_2 | \rho_\psi^s | x_2 \rangle | x_1 \rangle}{\langle x_1 | \rho_\psi^s | x_1 \rangle}. \tag{409}$$

If we also define a conditional quasi-density $P_s\left(\beta_2\beta_2^* | \beta_1\beta_1^*\right)$ by

$$\rho_\psi^s = \int P_s\left(\beta_2\beta_2^*; \beta_1\beta_1^*\right) |\beta_2\beta_1\rangle \langle \beta_2\beta_1|\, d^2\beta_2 d^2\beta_1 \tag{410}$$

$$\rho_{\psi_1}^s = \int P_1^s\left(\beta_1\beta_1^*\right) |\beta_1\rangle \langle \beta_1|\, d^2\beta_1 \tag{411}$$

$$P_s\left(\beta_2\beta_2^*; \beta_1\beta_1^*\right) = P_s\left(\beta_2\beta_2^* | \beta_1\beta_1^*\right) P_1^s\left(\beta_1\beta_1^*\right), \tag{412}$$

Eq. 409 can be written

$$p_s(x_2|x_1) = \frac{\int P_1^s(\beta_1\beta_1^*)\, P_s(\beta_2\beta_2^*|\beta_1\beta_1^*)\,|\langle x_1|\beta_1\rangle|^2\,|\langle x_2|\beta_2\rangle|^2\, d^2\beta_2 d^2\beta_1}{\int P_1^s(\beta_1\beta_1^*)\,|\langle x_1|\beta_1\rangle|^2\, d^2\beta_1}. \tag{413}$$

Unfortunately, we see that the stipulation that

$$P_s(\beta_2\beta_2^*|\beta_1\beta_1^*) \tag{414}$$

be independent of S is not sufficient for (408) to be independent of S for all $\overline{\underline{X}}_1$ and $\overline{\underline{X}}_2$. A sufficient condition is

$$P_s(\beta_2\beta_2^*|\beta_1\beta_1^*) = P_2(\beta_2\beta_2^*) \tag{415}$$

for which we can state the following theorem.

Theorem 12

If the subsystems 1 and 2 are normal-order-independent; that is,

$$P_s(\beta_2\beta_2^*;\beta_1\beta_1^*) = P_1^s(\beta_1\beta_1^*)\, P_2(\beta_2\beta_2^*), \tag{416}$$

then subsystem 2 can be ignored for signal processing without loss of optimality.

We conjecture from (413) that (416) is also a necessary condition for subsystem 2 to be neglected. This is in direct contrast to the classical case, and the difference is clear from (413) because we demand that any measurement of subsystem 1 make measurements of subsystem 2 fruitless, which is quite a strong condition. When $\overline{\underline{X}}_1$ and $\overline{\underline{X}}_2$ are specified, however, the problem becomes completely classical. Alternatively, we can also ask the question for fixed $\overline{\underline{X}}_1$ but variable $\overline{\underline{X}}_2$. There is no easy solution other than the condition (416). Note that (416) includes the particular case $\rho_\psi^s = \rho_{\psi_1}^s \otimes \rho_{\psi_2}$.

Let us consider a given receiver configuration

$$\begin{aligned} &\{W_k(\bar{r}, t)\} \\ &\{V_r, V_t\} \end{aligned} \tag{417}$$

such that $\{W_k(\bar{r}, t)\}$ is complete in the interval (363). We can express

$$\psi_{op}(\bar{r}, t) = \psi_{op}^s(\bar{r}, t) + \psi_{op}^c(\bar{r}, t), \tag{418}$$

where

$$\psi_{op}(\bar{r}, t) = \psi^{s}_{op}(\bar{r}, t) \triangleq \sum_{k} a_k W_k(\bar{r}, t) \qquad \begin{cases} \bar{r} \in V \\ t \in V \end{cases} \tag{419}$$

$$\psi_{op}(\bar{r}, t) = \psi^{c}_{op}(\bar{r}, t) \qquad \begin{cases} \bar{r} \notin V \\ t \notin V \end{cases} \tag{420}$$

The signal dependence goes only to $\psi^{s}_{op}(\bar{r}, t)$. By Theorem 12, we have not lost optimality by measuring functions of $(\underline{a}, \underline{a}^{\dagger})$ if the random field $\psi^{s}_{op}(\bar{r}, t)$ is normal-order independent of the field $\psi^{c}_{op}(\bar{r}, t)$. In our case $\psi^{c}_{op}(\bar{r}, t)$ is usually the additive noise so that for deterministic channels $\psi^{c}_{op}(\bar{r}, t)$ can be ignored if the noise field in $(V_{\bar{r}}, V_t)$ is normal-order independent of its other part outside. In particular, if the additive noise is white in both space and time, we need only look at the portion of the system containing the signal. In the presence of non-white additive noise or when $\psi^{s}_{op}(\bar{r}, t)$ and $\psi^{c}_{op}(\bar{r}, t)$ are correlated in the normal order we shall be able to improve our performance, in principle, by observing $\psi^{c}_{op}(\bar{r}, t)$. In this case $\psi^{c}_{op}(\bar{r}, t)$ cannot be ignored by an optimum receiver. Note that optimality may also be degraded when the integral of $\psi_{op}(\bar{r}, t)$ over $W_k(\bar{r}, t)$ introduces additive noise.

It is important to observe that because of preservation of commutators like (321) and (322) the additive noise component of $\psi_{op}(\bar{r}, t)$ cannot be completely white either spatially or temporally. Nevertheless, the additives can be normal-ordered white, in that the normal-order correlations are δ-correlated. In such a case there will be no loss of optimality by observing the field in a restricted space-time region. Intuitively this seems so, since the antinormal correlations, although non-white, contain no additional information other than the commutator that we already know.

Since we may have to be restricted to measurement intervals (363), for various reasons, it is more appropriate to ask whether in an expansion of the form

$$\psi_{op}(\bar{r}, t) = \sum_{n=1}^{M} C_n a_n \xi_n(\bar{r}, t) + \psi^{c}_{op}(\bar{r}, t), \qquad \begin{cases} \bar{r} \in V_r \\ t \in V_t \end{cases} \tag{421}$$

the optimal observation based on $(\underline{a}, \underline{a}^{\dagger})$ suffers any possible performance degradation. When the additive noise is non-white it is clear that $\psi^{c}_{op}(\bar{r}, t)$ of (421) cannot be ignored by the optimum receiver. In this situation the additive noise is frequently not "time-white."

In the example (386) measurement of simple time observables based on $\{b_k(t)\}$ entails no loss of optimality if we are constrained to make one-time measurements, although further observations would be desirable. No loss is attributed to space non-whiteness, since we are observing the total spatial volume under consideration. In the example following (393) the optimality is the same as in the previous case, even though we are observing a smaller spatial region. This is because under the approximation (398) the additive noise is spatially white in normal order.

Although unknown loss of optimality occurs in situations like (421), the loss is likely to be small. The simplification in system analysis, design, and implementation resulting from (421) would probably favor its use rather than strictly optimal representations. In conclusion, let us note that Theorem 12 cannot give the quantitative differences that may exist between two sub-optimal receiver configurations. It seems that there is no general way to obtain these differences except by individual optimal evaluation.

5.7 Complete Channel Representation

We can represent our channel and the corresponding receiver input density operator as in Fig. 4. As we have shown, the system can be simplified for Gaussian quantum noise to the form shown in Fig. 5. We shall now summarize and discuss the general procedure for establishing $\rho(\underline{a}, \underline{a}^\dagger)$.

We first emphasize that in the absence of given classical information our linear quantum-channel characterization provides the general framework for the development of $\rho(\underline{a}, \underline{a}^\dagger)$ from the transmitter channel receiver characteristics as outlined in Fig. 5. Parametrization of such characteristics has to be obtained from calculations or measurements for each individual problem, by using the approach that we have outlined. The specific nature of a problem may be invoked to find the field commutator (321) when fluctuation-dissipation theorems are not available, although this may not be easy.

It is most desirable to ignore the specific nature of a problem and to obtain the quantum specification directly from a given classical specification with a prescribed procedure. Such a procedure can then be applied without detailed knowledge of quantum theory. We shall now show how such a procedure may result from our development when the commutator can be determined from the given classical information.

1. The only essential difference between the quantum and classical cases lies in the commutator (321) which for Markov or stationary systems can be obtained from Eqs. 333, 334, or 340.

2. Separating out this commutator, or the corresponding one for $\mathscr{F}(\bar{r}, t)$ in Fig. 5 as in Eqs. 353-357, we have left a basically classical wave field. The normal-ordered averages of these fields may be identified with the given classical information. When appropriate, modifications like Eq. 313 may be introduced.

3. Stochastic channels and signals can now be described in a classical manner.

4. Form the observables (Eq. 379) for a given receiver configuration and find the P-representation by making sure that Eq. 380 holds.

We summarize this procedure in the following formula. Let $p(\underline{\gamma}, \underline{\gamma}^*)$ be the distribution describing the stochastic signals characterized by the random variables $\{\underline{\gamma}, \underline{\gamma}^*\}$. Assume that $\{\underline{a}, \underline{a}^\dagger\}$ is given as in (379) so that (380) holds. Let the corresponding classical variables be denoted $(\underline{\alpha}, \underline{\alpha}^*)$ so that

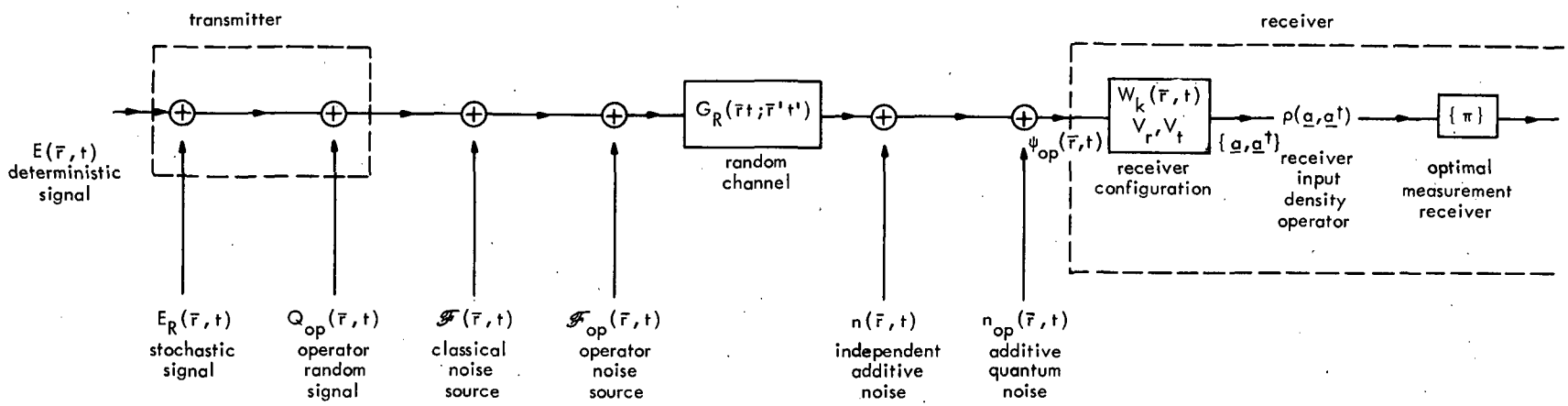

Fig. 4. Representation of quantum communication systems.

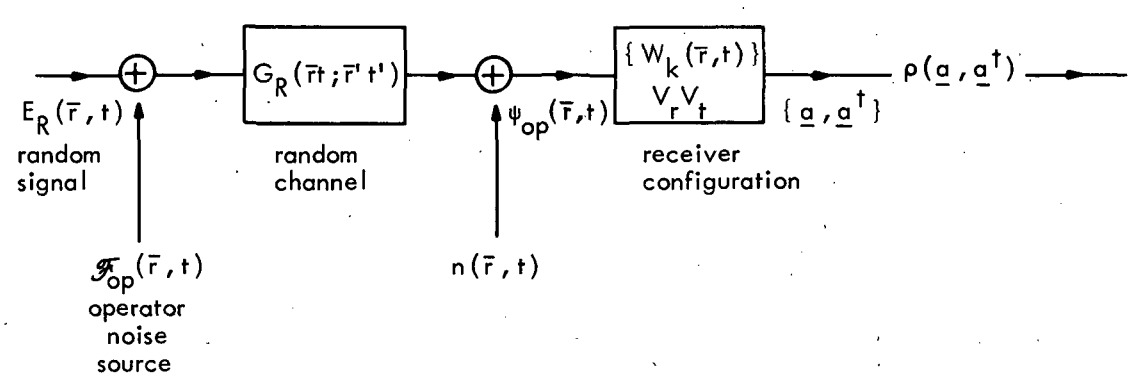

Fig. 5. Reduced representation of quantum communication systems.

$$a_k = \int_{V_r V_t} \psi(\bar{r}, t)\, W_k(\bar{r}, t)\, d\bar{r}dt + n_k \tag{422}$$

for the given classical field $\psi(\bar{r}, t)$ and noise n_k associated with $W_k(\bar{r}, t)$. The noise n_k can be assumed to be Gaussian. The given classical information can then be used to calculate

$$\underset{\sim}{\bar{P}}(\underline{a}, \underline{a}^*) = \int p\left(\underline{a}, \underline{a}^*; \underline{r}, \underline{r}^*; g^k_{mn}\right) p(\underline{r}, \underline{r}^*)\, p\left(g^k_{mn}\right) d^2\underline{r}\, d\underset{\sim}{g}^k_{mn}, \tag{423}$$

where $p\left(\underline{a}, \underline{a}^*; \underline{r}, \underline{r}^*; g^k_{mn}\right)$ is the Gaussian distribution for $(\underline{a}, \underline{a}^*)$ when the channel and signal are deterministic. We now have the following theorem.

Theorem 13

The density operator $\rho(\underline{a}, \underline{a}^\dagger)$ can be represented in a P-distribution given by (422).

The only important requirement for applying Theorem 13 is that the field commutator (321) is needed in general to find out the commutator for $\{\underline{a}, \underline{a}^\dagger\}$. The specific form of $\rho(\underline{a}, \underline{a}^\dagger)$ or $\underset{\sim}{\bar{P}}(a, a^*)$ depends heavily on such commutators. On the other hand, we are not yet able to obtain (321) from the given classical information, except for the special cases of Markov and stationary systems.

An even more important obstacle in applying Theorem 13 is that the usual classical specification is not given by a differential equation description. For an arbitrary specified random filter we may not be able to interpret it as the Green's function of a differential equation. In general, there are consistency requirements that arise from the deterministic initial and boundary conditions. For our Markov and stationary cases the consistency requirement is even more severe. The difficulty is actually a classical one, of finding $G_R(\bar{r}t; \bar{r}'t')$ corresponding to a differential equation, which comes up unavoidably in our quantum situations. These points will be considered further.

Note that if we are restricted to one-time measurements, we do not need two-time commutators. Since the one-time commutator is always known, the difficulty discussed above does not appear. Equation 321 is still needed, however, for complete specification of the quantum situation. The relation of our procedure to an ordinary description can be carried out as in section 2.6 (Part I). In our correspondence we have to deal with the complete fields, however.

5.8 Conclusion

We have discussed various points in connection with the development of quantum communication system models. They can be properly unified as in Fig. 5. When applicable, the procedure that we prescribe for the quantum classical transition is quite simple and can yield a variety of different representations.

It is possible to put each individual quantum problem into our framework in an approximate fashion. The task is reduced to a classical development of a proper

wave equation and the determination of its corresponding $G_R(\bar{r}t; \bar{r}'t')$. While the field commutator Eq. 321 is crucial for a general quantum specification, and is not yet available in our general case, we feel that it should be possible to find it in general. In any case, a differential equation viewpoint is necessary for finding such commutators, and hence for our quantum classical correspondence. Alternatively, what we actually need is a procedure for canonical quantization of nonconservative linear stochastic systems.

F. APPLICATION TO OPTICAL CHANNELS

We shall illustrate by some concrete examples the theory of quantum-channel representation that has just been described. We shall concentrate on the case in which a first-principle analysis is not available and only classical information is specified. Our purpose is to illustrate general procedures rather than to present detailed results. We shall treat one case in which a detailed analysis can be carried out from a basic physical description of the situation.

6.1 Consistency Conditions for the Classical Quantum Transition

We shall first elaborate upon the application of our correspondence procedure to a given classical field that has already been briefly described. It is clear that the development of a density-operator channel representation from our prescription is straightforward in principle, although it may be difficult analytically. The important problem is the establishment of the commutator Eq. 321 from the given classical information. Let us first observe more carefully the significance of this commutator.

Aside from being a requirement for complete quantum specification of the field under consideration, the commutator Eq. 321 has to be explicitly invoked in determining the commutators Eqs. 380 and 381. The extent to which Eqs. 380-381 determine the form of the final density-operator representation can be seen as follows. When the resulting $\bar{\rho}(\underline{a}, \underline{a}^\dagger)$ for the set $\{a_k\}$ of Eq. 379 is Gaussian the effect of Eq. 321 is simply a scaling in the parameters of $\bar{\rho}(\underline{a}, \underline{a}^\dagger)$ or of Eq. 382. Without a precise knowledge of (321) the scaling effect cannot be determined. Although the operator form of $\bar{\rho}(\underline{a}, \underline{a}^\dagger)$ is the same regardless of the form of (321), we shall still not be able to determine the quantitative dependence of our results on the system parameters. Such a situation is clearly not acceptable. Furthermore, when $\bar{\rho}(\underline{a}, \underline{a}^\dagger)$ is not Gaussian its operator form, or its P-representation (Eq. 352), cannot be determined properly without the specific commutators Eqs. 380 and 381. The commutator (321) is therefore necessary for general $\{a_k\}$. The only exception is when

$$W_k(\bar{r}, t) \propto \delta(t-t_o)$$

in Eq. 379. In this case only the one-time commutator

$$\left[\psi_{op}(\bar{r}, t), \psi^\dagger_{op}(\bar{r}', t)\right] = \delta(\bar{r}-\bar{r}'), \tag{424}$$

or

$$[\mathscr{E}_{op}(\bar{r}, t), \dot{\mathscr{E}}_{op}(\bar{r}', t)] = i\hbar\, \delta(\bar{r}-\bar{r}'), \tag{425}$$

is needed.

While we feel that it should be possible to find (321) in general from a classical

differential equation description of the channel, we have obtained results only in the Markov (or the vector Markov component) and stationary cases. We shall now investigate in these situations the applicability of our Eqs. 333, 334, and 340 to a classically specified $G_R(\bar{r}t;\bar{r}'t')$.

Let us assume that the given $G_R(\bar{r}t;\bar{r}'t')$ arises from a differential equation, and then determine what consistency conditions it has to satisfy. For Markov and stationary systems the output fields have a particular structure that leads to consistency conditions for both the classical and the quantum fields. In the Markov case the conditions are the fluctuation-dissipation theorems Eqs. 335 and 370 averaged over channel statistics. The channel-averaged quantities in these relations are very difficult to compute and depend heavily on the individual random $G_R(\bar{r}t;\bar{r}'t')$. It is not clear what they would imply about the structure of $G_R(\bar{r}t;\bar{r}'t')$ in general. It is therefore appropriate to ignore these relations under the assumption that the processes are describable in a Markov or vector Markov way, at least as a first approximation. There still remain consistency conditions that arise from the deterministic initial and boundary conditions.

Spatial boundary conditions of the problem are presumed to have been incorporated in the mode functions $\phi_k(\bar{r})$ in the expansion (Eq. 193) for $\psi_{op}(\bar{r},t)$. Initial conditions give rise to the constraint (424) at equal time so that

$$\bar{G}_R(\bar{r}t;\bar{r}'t) = \delta(\bar{r}-\bar{r}') \tag{426}$$

in the Markov case. From Eq. B.11, the equal-time constraint on $G_R(\bar{r}t;\bar{r}'t)$ for the vector Markov case is

$$\overline{\left.\frac{d^{n-1}}{dt^{n-1}}\, G_R(\bar{r}t;\bar{r}'\tau)\right|_{t=\tau_+}} = \delta(\bar{r}-\bar{r}') \tag{427}$$

when $\mathscr{L}_1$ involves derivatives up to the nth order. It is clear that condition (426) precludes interpreting a classical random filter with response function

$$\bar{G}_R(\bar{r}t;\bar{r}'t) = 0 \tag{428}$$

as the Green's function of a Markov differential system.

Assuming $G_R(\bar{r}t;\bar{r}'t')$ to be mean-square differentiable we can interchange differentiation and expectation operations[60] so that (427) becomes

$$\left.\frac{d^{n-1}}{dt^{n-1}}\, \bar{G}(\bar{r}t;\bar{r}'\tau)\right|_{t=\tau_+} = \delta(\bar{r}-\bar{r}'). \tag{429}$$

This is inconsistent with (428). In any case, (426) or (429) becomes the necessary and sufficient condition for interpreting a given $G_R(\bar{r}t;\bar{r}'t')$ as a random Green's function for Markov or vector Markov systems. In this case the field commutator (321) is

given by Eqs. 333, 334 or B. 10.

In the stationary case the fluctuation-dissipation relation (Eq. 341) can be readily interpreted and puts a rather severe requirement on the correlations of the additive noise. Initial conditions, or (425), also require

$$\frac{d}{dt}\bar{G}_R(\bar{r}t;\bar{r}'o)\Big|_{t=\tau_+} = \delta(\bar{r}-\bar{r}') \tag{430}$$

which has to hold in addition to Eq. 341. While we do not know the commutator (321) in the general case, we can see from Eq. 24 that we also have

$$\frac{\partial^{n-1}}{\partial t^{n-1}}\bar{G}_R(\bar{r}t;\bar{r}'t')\Big|_{t=t'_+} = \delta(\bar{r}-\bar{r}')$$

which is identical to (429). This condition arises from the constraint (425) at equal times. It is now clear that (429) is in general a necessary requirement for $G_R(\bar{r}t;\bar{r}'t')$ to be the random Green's function of a differential equation corresponding to $\psi_{op}(\bar{r},t)$ in Eq. 193. Depending on the nature of the fields, for example, $\psi_{op}(\bar{r},t)$ or $\mathscr{E}_{op}(\bar{r},t)$, the corresponding $G_R(\bar{r}t;\bar{r}'t')$ would be different functions. Since $\psi_{op}(\bar{r},t)$ and the electromagnetic fields are related deterministically by linear operations, so are their corresponding Green's functions. Explicit relations between such Green's functions can be obtained in general as in Appendix F. It suffices to note that the vanishing of one $\bar{G}_R(\bar{r}t;\bar{r}'t')$ implies the vanishing of all others from linearity.

In summary, when (428) holds for a given random filter $G_R(\bar{r}t;\bar{r}'t')$ we cannot strictly interpret it as the random Green's function of a differential equation. On the other hand, the commutator Eq. 189 can be immediately written when we are willing to accept the Markov assumption and, also, when (426) or (429) is satisfied. In the stationary case the additive noise correlations and $G_R(\bar{r}t;\bar{r}'t')$ have further to obey Eq. 341 in addition to the condition (430).

6.2 Further Considerations

To sharpen the discussion, let us consider a given random Green's function expanded in the form

$$G_f(\bar{r}t;\bar{r}'t') = \sum_{kn} g_{kn}\phi_k(\bar{r})\,\phi_k^*(\bar{r}')\,y_n(t)\,y_n^*(t'), \tag{431}$$

where $\phi_k(\bar{r})$ and $y_n(t)$ are complete and orthonormal without weighting functions, and $\{g_{kn}\}$ are random variables with given joint distributions. It is clear then that

$$\bar{G}_f(\bar{r}t;\bar{r}'t') = \sum_{kn} \bar{g}_{kn}\phi_k(\bar{r})\,\phi_k^*(\bar{r}')\,y_n(t)\,y_n^*(t') \tag{432}$$

so that if $\overline{G}_f(\bar{r}t;\bar{r}'t')$ is nonvanishing in some space-time intervals the averages of $\{g_{kn}\}$ cannot all vanish. When $t = t'$ it is reasonable to expect nonvanishing $\overline{G}_f(\bar{r}t;\bar{r}'t')$ for a differential system, since the channel disturbance has not yet begun to develop. While it is possible to expect $\overline{G}_f(\bar{r}t;\bar{r}'t') = 0$ for $t \gg t'$, our expansion of the form (432) may not be consistent with such situations.

It is possible to account for these situations in a phenomenological manner. Let

$$G_R(\bar{r}t;\bar{r}'t') = A(\bar{r}, t)\, G_f(\bar{r}t;\bar{r}'t') \tag{433}$$

be the new random Green's function. We assume that $A(\bar{r}, t)$ is a given classical random field when

$$t \gg t'$$

$$\bar{r} \gg \bar{r}'$$

but is unity otherwise. The precise region of random $A(\bar{r}, t)$ can be specified depending on the individual problem. It is therefore possible, by considering (433) as the random Green's function, to satisfy the initial conditions and at the same time have the desired behavior at the channel output. The function

$$\overline{G}_R(\bar{r}t;\bar{r}'t') = \overline{A}(\bar{r}, t)\, \overline{G}_f(\bar{r}t;\bar{r}'t') \tag{434}$$

then enters into the commutator instead of $\overline{G}_f(\bar{r}t;\bar{r}'t')$. The expression (434) gains further significance from the observation that for a multiplicative system

$$\psi_{op}(\bar{r}, t) = A(\bar{r}, t)\, \psi^t_{op}(\bar{r}, t).$$

The transmitted field $\psi^t_{op}(\bar{r}, t)$ is usually related to the source by a possibly random Green's function $G_f(\bar{r}t;\bar{r}'t')$. A representation of the form (433) can therefore be regarded as quite satisfactory when the region of random $A(\bar{r}, t)$ is properly determined.

Randomness in the output can also be attributed to the stochastic nature of the signals in the following way. Let a random Green's function of the form (431) be given. We write

$$\psi_{op}(\bar{r}, t) = \int_{t_o}^{t} \int_{V_2} G_R(\bar{r}t;\bar{r}'t')\, E(\bar{r}', t')\, d\bar{r}'dt' + n_{op}(\bar{r}, t), \tag{435}$$

where we suppose that the commutator of $n_{op}(\bar{r}, t)$ is given by (426). Let us assume $\{g_{kn}\}$ to be independent so that we have a canonical diversity representation

$$\psi_{op}(\bar{r}, t) = \sum_{kn} g_{kn}\phi_k(\bar{r})\, y_n(t) \int y^*_n(t')\, \phi^*_k(\bar{r}')\, E(\bar{r}', t')\, d\bar{r}'dt' + n_{op}(\bar{r}, t). \tag{436}$$

Define

$$\psi_{op}(\bar{r}, t) = \sum_{kn} \phi_k(\bar{r})\, y_n(t)\, e_{kn}\bar{g}_{kn}$$

$$E(\bar{r}, t) = \sum_{kn} e_k \phi_k(\bar{r})\, y_n(t)$$

$$n_{op}(\bar{r}, t) = \sum_{kn} g_{kn}^{-1} f_{kn} \phi_k(\bar{r})\, y_n(t).$$

We have

$$a_{kn} = \frac{1}{\bar{g}_{kn}} \int \phi_k^*(\bar{r})\, y_n^*(t)\, \psi_{op}(\bar{r}, t)\, d\bar{r}dt = e_{kn} \frac{g_{kn}}{\bar{g}_{kn}} + f_{kn} \tag{437}$$

$$\left[a_{kn}, a_{k'n'}^{\dagger}\right] = \delta_{kk'}\, \delta_{nn'}. \tag{438}$$

For independent Gaussian f_{kn} we can immediately form

$$P(\underline{\alpha}, \underline{\alpha}^*) = \prod_{kn} P_{kn}\left(\alpha_{kn}, \alpha_{kn}^*\right) \tag{439}$$

$$P_{km}\left(\alpha_{kn}, \alpha_{kn}^*\right) = \frac{1}{\pi \bar{n}_{kn}} \exp\left\{-\frac{\left|\alpha_{kn} - e_{kn} g_{kn}/\bar{g}_{kn}\right|^2}{\bar{n}_{kn}}\right\}, \tag{440}$$

where $\underline{\alpha} = \{\alpha_{kn}\}$ is the associated classical amplitude of $\{a_{kn}\}$, and we have assumed

$$\langle f_{kn}^{\dagger} f_{kn} \rangle = \bar{n}_{kn} \tag{441}$$

$$\langle f_{kn}^{\dagger} f_{kn} \rangle = 0. \tag{442}$$

It can be seen from (440) that the randomness in g_{kn} may alternatively be introduced through e_{kn}. Assume

$$p\left(e_{kn}, e_{kn}^*\right) = \frac{1}{\bar{N}_{kn}} \exp\left\{-\frac{\left|e_{kn}\right|^2}{\bar{N}_{kn}}\right\}. \tag{443}$$

The averaged P-function for α becomes

$$\bar{P}_{kn}\left(\alpha_{kn}, \alpha_{kn}^*\right) = \frac{1}{\pi(\bar{n}_{kn} + \bar{N}_{kn})} \exp\left\{-\frac{\left|\alpha_{kn}\right|^2}{\bar{n}_{kn} + \bar{N}_{kn}}\right\}, \tag{444}$$

where we have assumed for simplicity that g_{kn} is now chosen to be nonrandom. The

form (444) is the familiar one of Gaussian signal in Gaussian noise. Note that we cannot assume $\{g_{kn}\}$ to possess a distribution like (443), since in that case $\bar{g}_{kn} = 0$.

Random-phase channels can be introduced through signals similar to those in the example above. While such a procedure is acceptable analytically, we feel nevertheless that it is more meaningful and correct to treat random channels by Green's functions like (433), since the commutator (321) does reflect the channel mean response. This will be discussed further.

6.3 Radiative Loss and Dissipative Channels

We wish to show the differences and similarities between quantum-channel representations of the radiative loss and dissipative channels. The radiative loss case is an example of a free-space optical channel. Classically, both channels may be regarded as additive noise that is free under appropriate conditions. It is interesting to find out whether they are also similar quantum-mechanically.

6.3.1 Radiative Loss Channel

Consider a field $\psi_{op}(\bar{r}, t)$ at the channel output resulting from free-space transmission. The expansion (Eq. 193) becomes

$$\psi_{op}(\bar{r}, t) = \sum_k \phi_k(\bar{r})\, e^{-i\omega_k t}\, b_k(0), \tag{445}$$

where

$$\left[b_k(0), b_{k'}^{\dagger}(0) \right] = \delta_{kk'} \tag{446}$$

and all other commutators are taken to be zero. The observables $b_k(0)$ correspond to pure coherent states.

$$\langle b_k(0) \rangle = \bar{\beta}_k \tag{447}$$

$$\langle b_k^{\dagger}(0) b_k(0) \rangle = \bar{\beta}_k^{*} \bar{\beta}_k \tag{448}$$

$$\langle b_k^{\dagger}(0) b_k^{\dagger}(0) \rangle = 0 \tag{449}$$

$$\langle b_k(0) b_k(0) \rangle = 0. \tag{450}$$

If $\{\beta_k\}$ are the associated classical amplitudes of $b_k(0)$, the P-distribution of $b_k(t)$ is given by

$$P_k\left(\beta_k(t), \beta_k^{*}(t)\right) = \delta^2\left(\beta_k - e^{-i\omega_k t}\, \bar{\beta}_k\right). \tag{451}$$

The field commutator (321) is then

$$\left[\psi_{op}(\bar{r},t), \psi^{\dagger}_{op}(\bar{r}',t')\right] = \sum_k \phi_k(\bar{r})\, \phi^*_k(\bar{r}')\, e^{-i\omega_k(t-t')} \tag{452}$$

which is the free-space Green's function

$$G_F(\bar{r}t;\bar{r}'t') = G_F(\bar{r}-\bar{r}';t-t'). \tag{453}$$

The observables (Eq. 379) can be taken to be, say,

$$a_k = \int_A d\bar{r} \int e^{i\omega_k t}\, \psi_{op}(\bar{r},t)\, dt \tag{454}$$

$$= b_k(0)\, A_k \tag{455}$$

which are proportional to $b_k(0)$, with

$$A_k = \int_A \phi_k(\bar{r})\, d\bar{r}.$$

Each a_k therefore also corresponds to a pure coherent state so that Eq. 382 becomes

$$P\left(\alpha_k, \alpha^*_k\right) = \delta^2(\alpha_k/A_k - \bar{\beta}_k)$$

$$= |A_k|^2\, \delta^2(\alpha_k - \bar{\beta}_k A_k). \tag{456}$$

We occasionally prefer to use α_k, rather than $\alpha'_k = \alpha_k/A_k$, since it shows more clearly the distribution in α_k. We also can derive from Eq. 379

$$a_k = \int_A \phi^*_k(\bar{r})\, d\bar{r} \int e^{i\omega_k t}\, \psi_{op}(\bar{r},t)\, dt, \tag{457}$$

and the resulting constant A_k would then reflect directly the relative energy intensities included in the observation volume or area A.

In the presence of independent additive noise $n(\bar{r},t)$ the field commutator (452) can be preserved by taking the noise to be classical. If the noise is stationary and Gaussian-distributed,

$$n(\bar{r},t) = \sum_k \phi_k(\bar{r})\, f_k(t) \tag{458}$$

$$P_k\left(f_k, f^*_k, t\right) = \frac{1}{\pi\bar{n}} \exp\left\{-\frac{|f_k|^2}{\bar{n}}\right\}. \tag{459}$$

For independent $f_k(t)$, the output distribution of (455) is modified to read

$$P_k\left(\beta_k, \beta_k^*, t\right) = \frac{1}{\pi \bar{n}} \exp\left\{ - \frac{\left| \beta_k - e^{-i\omega_k t} \bar{\beta}_k \right|^2}{\bar{n}} \right\}. \tag{460}$$

Such a distribution would also arise when $\bar{\beta}_k$ is a Gaussian random variable. The corresponding distribution for $\{a_k\}$ is

$$P_k\left(a_k, a_k^*\right) = \frac{1}{\pi \bar{n}} \exp\left\{ - \frac{\left| a_k - \bar{\beta}_k A_k \right|^2}{\bar{n} A_k^2} \right\}. \tag{461}$$

Again, a_k of the type (454) or (457) can be formed, and the resulting $\rho(\underline{a}, \underline{a}^\dagger)$ worked out in a straightforward way.

It is now clear that the radiative loss system in the absence of additive noise gives rise to pure quantum states – the coherent states of the electromagnetic field. This does not imply, however, that perfect performance can be readily achieved, because of the quantum nature of the received signal.

6.3.2 Dissipative Channel

We shall consider a simple stationary dissipative system with a Green's function

$$G(\bar{r}t;\bar{r}'t') = \sum_k \phi_k(\bar{r})\, \phi_k^*(\bar{r}')\, h_k(t-t') \tag{462}$$

for the field

$$\psi_{op}(\bar{r}, t) = \sum_k \phi_k(\bar{r})\, b_k(t). \tag{463}$$

For concreteness, we may take, for example,

$$h_k(t-t') = \exp\left\{ - \frac{\Gamma}{2}(t-t') - i\omega_k(t-t') \right\}. \tag{464}$$

In this case the system is describable in a Markov manner, and, from Eq. 281, we have

$$\left[\psi_{op}(\bar{r}, t), \psi_{op}^\dagger(\bar{r}', t') \right] = G(\bar{r}t;\bar{r}'t'), \qquad t > t'. \tag{465}$$

This commutator (465) can be immediately compared with (452).

In this situation an additive quantum noise is needed to preserve (424). It is only necessary for that noise to have a commutator, so that (465) holds. The normal-ordered correlations of the additive noise can be taken to vanish, as, for example, when the system temperature goes to zero. Thus, if we write

$$b_k(t) = \exp\left(-\frac{\Gamma}{2}t - i\omega_k t\right) b_k(0) + f_k(t), \tag{466}$$

where $b_k(0)$ obeys (447)-(458), and

$$\langle f_k^\dagger(t) f_k(t)\rangle = \langle f_k(t) f_k(t)\rangle = 0, \tag{467}$$

we have

$$\langle b_k(t)\rangle = \exp\left(-\frac{\Gamma}{2}t - i\omega_k t\right) \bar{\beta}_k \tag{468}$$

$$\langle b_k^\dagger(t) b_k(t)\rangle = e^{-\Gamma t} |\beta_k|^2. \tag{469}$$

The P-distribution of $\beta_k(t)$ is then

$$P_k\left(\beta_k(t), \beta_k^*(t)\right) = \delta^2\left[\beta_k - \exp\left(-\frac{\Gamma}{2}t - i\omega_k t\right) \bar{\beta}_k\right]. \tag{470}$$

For

$$a_k = \int_A d\bar{r} \int \exp\left(i\omega_k t + \frac{\Gamma}{2}t\right) \psi_{op}(\bar{r}, t)\, dt$$

$$= A_k b_k(0), \tag{471}$$

the resulting distribution $P\left(a_k, a_k^*\right)$ is identical to (456) if the integral in (471) can be physically implemented without additive noise. Such an integral implies amplification, and so will probably introduce an additive noise.

When the system is at a finite temperature there will be additive noise associated with the dissipation. When according to our Markov assumption

$$\langle f_k^\dagger(t) f_k(t')\rangle = \Gamma \bar{n} \delta(t-t') \tag{472}$$

$$\langle f_k(t) f_k(t')\rangle = 0, \tag{473}$$

we have

$$P_k\left(\beta_k, \beta_k^*, t\right) = \frac{1}{\pi \bar{n}} \exp\left\{-\frac{\left|\beta_k - \exp\left(-i\omega_k t - \frac{\Gamma}{2}t\right) \bar{\beta}_k\right|^2}{\bar{n}}\right\}. \tag{474}$$

The resulting distribution for a_k of the form (471) is the same as (461) even in the presence of amplification noise, since further Gaussian additive noise can be accounted for by adding the corresponding noise power to $\bar{n}$. Further discussion will be found in Appendix C.

6.3.3 Comparison

Let us observe that the first difference between the radiative and dissipative loss channels lies in the corresponding field commutator (452) vs (465). In spite of this, the one-time distribution (470), while different from (455), is essentially the same as (456). In both cases the observables suffer losses, radiative for α_k and dissipative for $\beta_k(t)$. Moreover, note that we have pure coherent states in all of these situations. Similarly, the distributions (460) and (461) can be compared with (474). In the absence of amplification noise the a_k of (471) is identical to the a_k of (457).

In general, the dissipative case is more complicated. In the first place, amplification noise may be introduced. In the second place, observables like (457) are coupled for the dissipative channel. It should be clear, however, that when noiseless amplification like (471) is possible, the two situations can always be made identical with a different receiver.

In summary, the two situations are basically identical for one-time measurements. In general they will be identical insofar as an integral of the (471) type can be implemented without additive noise. This is possible in principle classically, but we indicate in Appendix C that this is not possible quantum-mechanically if the integral is implemented by a linear filter. Except for this point, the quantum situation is completely analogous to the classical one, with similar quantum-channel representations.

6.4 Atmospheric Channel

We now apply our previous consideration in section 6.1 to the turbulent atmospheric optical channel.[50, 78] Our first task is to establish the field commutator Eq. 321 from given classical specifications. While there are basic differential equation descriptions for electromagnetic transmission through the atmosphere,[132-134, 56] we shall not pursue such a detailed quantum development from first principles. Instead, we shall try to find the quantum model directly from our procedures for classical quantum correspondence. This would demonstrate the generality and convenience of our treatment. Warning should be given at the outset that our result is approximate, although it may be adequate for communication analysis.

In the usual model of a turbulent atmosphere, dissipative losses are neglected. When the turbulence is turned off, the field commutator is then clearly given by the free-space Green's function (453), where the set $\phi_k(\bar{r})$ is chosen depending on system geometry. When turbulence is introduced, one may expect the mean Green's function to remain basically the free-space function. While this is not true in general, we shall show that our correspondence procedure supports this proposition as applied to many potential receiver configurations.

We first argue that the output field (442) is strictly Markov. This follows in general from the time harmonic field that is usually assumed for the turbulent atmosphere, and also follows from the approximation that we shall make. The field commutator Eq. 321

is now given by the averaged Green's functions.

We assume, as before, that the transmitted electric field is related to the output field by a log-normal multiplicative process

$$\mathscr{E}_{op}(\bar{r}, t) = e^{\gamma(\bar{r}, t)} \mathscr{E}^{t}_{op}(\bar{r}, t), \tag{475}$$

where $\gamma(\bar{r}, t)$ is a complex Gaussian process and $\mathscr{E}_{op}(\bar{r}, t)$ is the complex envelope of the electric field. The transmitted field $\mathscr{E}_{op}(\bar{r}, t)$ is then related to the source through the free-space propagation. The field $\psi_{op}(\bar{r}, t)$ is related to $\mathscr{E}_{op}(\bar{r}, t)$ through a linear deterministic filter in general. We further assume that the process $\gamma(\bar{r}, t)$ is stationary in both space and time arguments.[50] The average Green's function for $\psi_{op}(\bar{r}, t)$ is then of the form

$$\begin{aligned} \bar{G}_R(\bar{r}, t; \bar{r}'t') &= \overline{e^{\gamma(\bar{r}, t)}}\, G_F(\bar{r}t; \bar{r}'t') \\ &= C_\gamma \times G_F(\bar{r}t; \bar{r}'t') \end{aligned} \tag{476}$$

with the free-space Green's function $G_F(\bar{r}t; \bar{r}'t')$ and a multiplicative constant C_γ.

As we have explained in section 6.1, the $\bar{G}_R(\bar{r}t; \bar{r}'t')$ of (476) cannot be interpreted as the average random Green's function of a differential equation for all $\{\bar{r}, \bar{r}'; t, t'\}$ when $C_\gamma \neq 1$. It is possible to have such an interpretation when the constant C_γ is turned on only for $t \gg t'$ and $\bar{r} \gg \bar{r}'$. We can therefore consider (476) as the $\tilde{G}_R(\bar{r}t; \bar{r}'t')$ of (433). We still have to determine the region where C_γ begins to be important.

The commutator Eq. 321, which is now given by (476), is used only in constructing density-operator models. A typical construction in this case involves integrating t and t' within the same coherent time interval and $\bar{r}$ and $\bar{r}'$ within a diversity of coherence areas. If the turbulence effect has not modified the field propagation significantly in a time interval $t - t'$ and a space interval $\bar{r} - \bar{r}'$ that are small compared with the coherent time and the distance traveled in that time, respectively, it is reasonable to approximate C_γ by unity in (476). We can then take Eq. 321 to be the free-space Green's function $G_F(\bar{r}t; \bar{r}'t')$ for applications to density-operator calculations of many receiver configurations. For large $t - t'$, the $\tilde{G}_R(\bar{r}t; \bar{r}'t')$ will be given in our approximation by (477). The precise behavior of $\bar{G}_R(\bar{r}t; \bar{r}'t')$ for all time has to be obtained by a more detailed classical analysis.

The assumption that is actually required for using $\bar{G}_F(\bar{r}t; \bar{r}'t')$ as $\bar{G}_R(\bar{r}t; \bar{r}'t')$ in our field commutator applications is that the signal-processing time should be short enough so that in the scale of field propagation the turbulence effect is still not important in determining $\bar{G}_R(\bar{r}t; \bar{r}'t')$. With the high velocity of light the corresponding space interval would certainly be large enough to include the signal-processing areas. This characteristic time at which turbulence starts to turn on has again to be obtained classically. We may nevertheless always use as a first approximation the original Green's function of

the transmission medium without perturbing effect as the $\overline{G}_R(\bar{r}t;\bar{r}'t')$ in the field commutator Eq. 321.

It may frequently be convenient to employ the commutator between the electric or magnetic fields for receiver input modeling. This has the further advantage that the electromagnetic fields are more readily observable dynamical quantities. It is shown in Appendix F that in general we have

$$\overline{[\mathscr{E}(\bar{r},t),\dot{\mathscr{E}}(\bar{r},t)]} = i\hbar \operatorname{Re} \overline{G}_R(\bar{r}t;\bar{r}'t'), \tag{477}$$

where $G_R(\bar{r}t;\bar{r}'t')$ is the Green's function for $\psi_{op}(\bar{r},t)$ of the form (463).

Let us now give the density-operator representation of the atmospheric channel for the following kind of receiver configuration. We assume that the free-space Green's function is expanded in the form

$$G_F(\bar{r}t;\bar{r}'t') = \sum_k \frac{1}{\ell_k} \phi_k(\bar{r})\, \phi_k^*(\bar{r}')\, y_k(t)\, y_k^*(t'). \tag{478}$$

Over a time interval T we assume

$$\int_T y_k(t)\, y_{k'}^*(t)\, dt = \delta_{kk'}. \tag{479}$$

For convenience, let us employ a cylindrical coordinate system $\bar{r} = (z, \vec{\rho})$ with the following property for $\phi_k(z, \vec{\rho})$. At certain points z_o we assume

$$\int_{A_c} \phi_k^*(z_o, \vec{\rho})\, \phi_{k'}(z_o, \vec{\rho})\, d\vec{\rho} = \delta_{kk'}\gamma \tag{480}$$

over the coherence area A_c in the received plane at z_o. Here γ is a constant smaller than 1 when $\phi_k(\bar{r})$ is orthonormal over the spatial volume of interest. We now define

$$a_k = \ell_k \int_T y_k^*(t)\, dt \int_{A_c} \delta(z-z_o)\, \phi_k^*(z_o, \vec{\rho})\, \psi_{op}(\bar{r},t)\, dz d\vec{\rho}, \tag{481}$$

so that by using (478) as our field commutator,

$$\left[a_k, a_{k'}^\dagger\right] = \delta_{kk'}\gamma^2. \tag{482}$$

The variables

$$\tilde{a}_k = \frac{a_k}{\gamma} \tag{483}$$

are properly normalized photon operators.

Suppose that $\gamma(\bar{r},t)$ of (475) is completely correlated over the time interval and

spatial area where it is correlated at all, and is completely uncorrelated from one such interval and area to another.[78] Moreover, we assume that T is smaller than the coherent time interval. We can then write

$$a_k = z\bar{a}_k + n_k, \tag{484}$$

where $\bar{a}_k$ is a parameter depending on the signal. The random variable z is

$$z = ue^{i\phi} \tag{485}$$

with independent distributions for u and ϕ:

$$p(u) = \frac{1}{\sqrt{2\pi}\ \sigma u} \exp\left\{-\frac{(\ln u + \sigma^2)^2}{2\sigma^2}\right\}; \qquad u > 0 \tag{486}$$

$$p(\phi) = \frac{1}{2\pi}; \qquad 2\pi \geqslant \phi \geqslant 0. \tag{487}$$

We assume that n_k is a Gaussian quantum noise that is uncorrelated to any order with z. Strictly speaking, n_k is a Gaussian noise also multiplied by z so that, while still Gaussian, it may have some higher order correlations with z. These correlations we neglect here for simplicity.

The variables $\tilde{a}_k$ possess a joint P-distribution

$$P(\underline{\tilde{a}}) = \prod_k P_k(\tilde{a}_k), \tag{488}$$

where for fixed z

$$P_k(\tilde{a}_k) = \frac{\gamma^2}{\pi \bar{n}_k} \exp\left\{-\frac{|\gamma\tilde{a}_k - z\bar{a}_k|^2}{\bar{n}_k}\right\}, \tag{489}$$

and the $\{\tilde{a}_k\}$ are the associated classical amplitudes of $\{\tilde{a}_k\}$. We have assumed

$$\langle n_k^\dagger n_k \rangle = \bar{n}_k$$

$$\langle n_k n_k \rangle = 0.$$

Averaging (489) over the distribution for z, we finally obtain

$$\bar{P}_k(\tilde{a}_k, \tilde{a}_k) = \frac{\gamma^2}{\pi \bar{n}_k} \exp\left\{-\frac{|\tilde{a}_k|^2}{\bar{n}_k/\gamma^2}\right\} \int du\, I_o\left(\frac{2\gamma\bar{a}_k' u |\tilde{a}_k|}{\bar{n}_k}\right)$$

$$\times \frac{1}{\sqrt{2\pi}\ \sigma} \exp\left\{-\frac{(\ln u + \sigma^2)^2}{2\sigma^2} - \frac{\bar{a}_k^2 u^2}{\bar{n}_k}\right\}, \tag{490}$$

where $I_o(x)$ is the zero-order modified Bessel function of the first kind. The P-distribution is diagonal in the photon number representation of $a_k^\dagger \tilde{a}_k$. If we are careful about the corresponding density-operator representation we can change variables back to $\{\alpha_k\}$ for $\{a_k\}$ by direct substitution of $\alpha_k = \gamma\tilde{\alpha}_k$ in (490).

We have considered only one coherence area. The extension to a diversity of many coherence areas will be straightforward. Furthermore, we may see that many other density-operator representations can be formed, even with the many approximations that we have made. One most susceptible assumption is that within the signal-processing time T the turbulence effect represented by C_γ is not yet significant in $\overline{G}_R(\bar{r}t;\bar{r}'t')$. It appears that a more detailed consideration of the problem at the classical level is required for a better quantum treatment.

6.5 Multiple Scattering Channel

We shall give only a brief consideration of scattering channels[50, 82] that describe optical communication through clouds, fog, and haze. The first question for a quantum formulation is again the development of an appropriate field commutator at the receiver.

Scattering channels are usually characterized classically by randomly varying space-time linear filters which are sample functions of Gaussian processes. They are analogous to ordinary fading dispersive channels with the added complication of spatial fading. The mean output field of the mean impulse response is again taken to vanish. Thus this problem falls into the general case that we treated in sections 6.1 and 6.2. The filter cannot therefore be interpreted as a random Green's function without modification.

Our argument in sections 6.2 and 6.4 suggests that for t close to t' and $\bar{r}$ close to $\bar{r}'$ the average filter response $\overline{G}_R(\bar{r}t;\bar{r}'t')$ should not vanish, and can be taken to be the free-space Green's function for receiver input calculation. In the present form this is not a very good application, particularly for an earth-to-space optical link. In the absence of a detailed consideration one may take the free-space Green's function for the field commutator as a first approximation.

Once the field commutator is known, it is straightforward to obtain density-operator representation for different receiver configurations. Since our received field is Gaussian, the calculation is further simplified because the signal-carrying processes and the pure-noise processes are independent. With a Karhunen-Loève expansion of $G_R(\bar{r}t;\bar{r}'(t')$, or an expansion of the type of Eq. 84, the problem is reduced to a canonical diversity representation where each diversity path is a Gaussian multiplicative or Rayleigh fading channel. For brevity, we are omitting the obvious procedures for carrying out such an analysis.

If the phase information has been already completely destroyed at the receiver, presumably a direct-energy measurement would be made. In such a case it might appear that the field-amplitude commutator is not needed. That this is not so is clear if we note that we require the field commutator for calculation of the receiver input

density operators, which in turn are needed for calculations of photon measurement probabilities.

6.6 Guided Optical Transmission

We shall give a first-principle quantum description of an optical transmission line considered as a communication channel. The purpose of such an analysis is to show the relation of our general theory to concrete situations by an example in which things can be worked out in detail, and to gain further confidence in our general results. Our pace here will be rather rapid, omitting many detailed derivations.

Let the voltage and current along a one-dimensional TEM wave transmission line be $V(z,t)$ and $I(z,t)$ which obey the dissipative equations

$$\begin{aligned} \frac{\partial V}{\partial z} &= -L \frac{\partial I}{\partial t} \\ \frac{\partial I}{\partial z} &= -C \frac{\partial V}{\partial t} - GV + I_o(t)\ \delta(z) + F(z,t) \end{aligned} \tag{491}$$

for a source current $I_o(t)$ and noise $F(z,t)$. Introduce the potential $A(z,t)$ so that

$$\begin{aligned} I(z,t) &= -\frac{\partial A}{\partial z} \\ V(z,t) &= L \frac{\partial A}{\partial t}. \end{aligned} \tag{492}$$

We have from (491)

$$\frac{\partial^2 A}{\partial z^2} - \frac{1}{s^2} \frac{\partial^2 A}{\partial t^2} - GL \frac{\partial A}{\partial t} = -I_o(t)\ \delta(z) - F(z,t) \tag{493}$$

$$s^2 = \frac{1}{LC}. \tag{494}$$

The conjugate field for $A(z,t)$ is

$$\pi(z,t) = \frac{L}{s^2} \frac{\partial A}{\partial t}, \tag{495}$$

and from canonical quantization

$$[A(z,t), \pi(z',t)] = i\hbar\ \delta(z-z'). \tag{496}$$

Introduce the initial and boundary conditions

$$I(z,o_-) = \left.\frac{\partial I(z,t)}{\partial t}\right|_{t=0_-} = 0 \tag{497}$$

$$I(o,t) = I(\ell,t) = 0, \tag{498}$$

where the length ℓ of the line can become infinite. In general we shall only look at the signal field before it reaches the end of the line so that a finite ℓ is just a mathematical convenience.

We can now expand $A(z,t)$ in the standing-wave modes

$$A(z,t) = \sqrt{\frac{2}{\ell L}}\ s \sum_n \cos k_n z q_n(t), \tag{499}$$

with

$$\omega_n = k_n s, \qquad k_n = \frac{n\pi}{\ell}; \qquad \text{integer } n$$

and $[q_n(t), \dot{q}_n(t)] = i\hbar$. If we expand

$$F(z,t) = \left(\frac{\hbar C}{\ell}\right)^{1/2} \sum_n \omega_n \cos k_n z \{f_n(t) + f_n^\dagger(t)\} \tag{500}$$

and adopt a Markov-rotating-wave approximation[72,73] we have, corresponding to Eq. 216,

$$\frac{db_n}{dt} = -i\omega_n b_n - \frac{1}{2}\gamma b_n + f_n(t) + \left(\frac{1}{\ell C\hbar\omega_n}\right)^{1/2} I_o(t), \tag{501}$$

where

$$b_n(t) = \frac{1}{\sqrt{2\hbar\omega}} \{\dot{q}_n(t) - i\omega_n q_n(t)\} \tag{502}$$

$$\left[b_n(t), b_n^\dagger(t)\right] = 1 \tag{503}$$

$$\gamma = \frac{G}{C} \tag{504}$$

$$\left[f_n(t), f_{n'}^\dagger(\tau)\right] = \gamma\delta(t-\tau)\ \delta_{nn'} \tag{505}$$

$$\langle f_n^\dagger(t) f_{n'}(\tau)\rangle = \gamma\bar{n}\delta(t-\tau)\ \delta_{nn'} \tag{506}$$

$$\langle f_n(t) f_{n'}(\tau)\rangle = 0 \tag{507}$$

and $\bar{n}$ is a Bose distribution as before. When $f_n(t)$ is taken to be Gaussian, specification

of the relevant fields is complete. The Markov-rotating-wave approximation is valid when γ/ω_n is negligibly small for the frequency modes of interest. A fundamental derivation of (501) can be given by considering a coupled system and reservoir.

Introducing the field (Eq. 193)

$$\psi_{op}(z,t) = \sum_n \cos k_n z b_n(t), \tag{508}$$

we have (Eq. 321)

$$\left[\psi_{op}(z,t), \psi^{\dagger}_{op}(z',t')\right] = \sum_n \cos k_n z \cos k_n z' \exp\left\{-\frac{\gamma}{2}(t-t') - i\omega_n(t-t')\right\} \tag{509}$$

which can be compared with (462)-(465). It is clear that a P-distribution for each $b_n(t)$ can be written with the same form as (474).

The Green's function of our differential equation (493) under a source $-\delta(z)\,\delta(t)$ and our boundary condition in general is

$$G(zt;z't') = e^{-\frac{\gamma}{2}(t-t')}\, U_{-1}\left(t-t'-\frac{z-z'}{s}\right) I_o\left\{-\frac{\gamma}{2}\sqrt{(t-t')^2 - \frac{(z-z')^2}{s^2}}\right\} \tag{510}$$

which is of course space-time invariant. The function $U_{-1}(x)$ denotes the unit step function, and I_o is the modified Bessel function of zero order. In our approximation we take

$$G(zt;z't') \cong e^{-\frac{\gamma}{2}(t-t')}\, U_{-1}\left(t-t'-\frac{z-z'}{s}\right) \tag{511}$$

so that under a source $-I_s(t)\,\delta(z)$, the output current is

$$I(z,t) = \exp\left\{-\frac{\gamma z}{2s}\right\} I_s\left(t-\frac{z}{s}\right). \tag{512}$$

Other output fields including the noise can be readily obtained from (511). Such explicit construction of the detailed physical space-time behavior for the fields is clearly useful.

To demonstrate the usefulness of such an explicit representation, let us suppose that the signal $I_s(t)$ is turned on for a duration T only. The mean current $\langle I(z,t)\rangle$ is then nonvanishing only in the space interval st to s(t-T) at any moment t. The mean voltage is similarly nonvanishing only in such an interval. We can construct a density-operator representation for linear functionals of

$$\tilde{\psi}(z,t) = CI(z,t) + iV(z,t) \tag{513}$$

or other similar fields like A(z,t). Here C is a real constant. For a choice of Eq. 379

$$a = \int_{s(t-\tau)}^{st} \tilde{\Psi}(z,t)\, y_n\left(t - \frac{z}{s}\right) \exp\left(\frac{\gamma z}{2s}\right) dz \tag{514}$$

the commutator

$$[a, a^\dagger]$$

can be determined from

$$[V(z',t), I(z,t)] = i\hbar s^2 \delta'(z-z'). \tag{515}$$

When

$$I_s(t) = y_n\left(t - \frac{z}{s}\right) I_s \tag{516}$$

$$\int y_n^2(t)\, dt = 1 \tag{517}$$

the operator a as obtained from (514) contains I_s directly as its mean. A single density operator can then be developed for $(a, a^\dagger)$ without loss of optimality when the additive noise is spatially white, which is the case for our frequency band of interest. This density operator can be compared with

$$\rho = \mathscr{A} \prod_k P_k\left(\beta_k, \beta_k^*, t\right)$$

constructed from each of the mode amplitudes $b_k(t)$. The resulting simplification is indeed enormous, especially for a parameter estimation problem when we want to estimate I_s.

It is clear that the statistical dynamical problem here is completely solved. We have both the detailed Heisenberg operator solutions and the relevant statistics derived from what we may call a first-principle calculation. Again, many density operators can be formed, and since this is a straightforward exercise we shall not dwell on the procedure.

6.7 Conclusion

We have given several explicit examples, together with a general consideration, in our procedure for obtaining quantum-channel representation from given classical specification. Our purpose has been only to indicate the convenience and generality of our method, rather than to present an exhaustive treatment of the individual optical channels. From the description that we have given, we can construct the density-operator representation for any convenient receiver configuration.

An important point in our discussion is that the unperturbed Green's function may be used quite generally as a first approximation in the field commutator employed for receiver input calculations. When this commutator is known our classical quantum correspondence is completed. The extent to which this use of unperturbed Green's function

will be a good approximation is still unknown. It is clear that for both the atmospheric and scattering channels it cannot be held unconditionally. It appears that further detailed classical analyses, particularly those from a differential equation viewpoint, will be required to give more accurate quantitative determination of the field commutators or the system Green's functions.

G. CONCLUSION TO PART I

We shall give a final synopsis of the major points in our quantum communication system modeling and some discussion of the nature of our approach. Suggestions for more useful work in this area will also be indicated.

7.1 Summary of Results

In Part I we have developed the general quantum representation of channels that are describable by linear equations. For this purpose our theory provides a general framework for obtaining the specifying parameters in the quantum description by various means. A most convenient way of achieving the quantum specification is through the given classical specification. In such a situation we have to obtain the channel output field commutator from the classical information. Receiver input density operators can then be calculated directly from a classical statistical specification of the output field. Our field commutator specification is limited, however, to given classical Markov or stationary systems, so that we assume that the corresponding quantum system is also Markov or stationary.

Our final construction of the P-representation given by Theorem 13 is quite simple. In particular, if, in the absence of noise, our transmitter generates a coherent state at the channel output, then, in the presence of noise and other channel-signal statistics, the channel output is a classical superposition of coherent states.

It may be argued that this construction and interpretation are obvious without our analysis. Our theory, however, illuminates the assumptions that are inherent in such a procedure, including the special form of quantum statistics that we take for the fields. More important is the essential point that in this procedure the field commutator has to be known for a proper construction of density operators. Thus, an application to an arbitrary set of variables $\underline{a}$ in the procedure will lead to incorrect results. It should be clear that such a procedure will usually have no meaning unless the field commutator is derived from the classical information.

We have given some examples that are pertinent to optical channels to illustrate applications of our procedure. The important lesson to learn from these applications is that the classical information is not always directly given in a suitable form for transition to the quantum region. Various classical analyses may be needed to put the classical information in a correct form. In this connection it has been noted that descriptions of classical communication systems from a physical differential equation viewpoint will be more convenient for quantization.

We have presented primarily a framework in which linear quantum channel representation can be developed, particularly from given classical specification. We have also considered some matters of independent interest, for example, a theory of quantum random processes and fluctuation-amplification theorems. Also, our theory of quantum field propagation can be immediately adopted as a theory of quantum noise in

traveling-wave amplifiers. There are several problems, however, that need further study for a complete theory of communication system modeling.

7.2 Suggestions for Further Research

The most important unsolved problem is the proper development, from classical information only, of the field commutator that is applicable in a general situation. This can be viewed as a problem of canonically quantizing a nonconservative stochastic system. A brief discussion of possible approaches to this problem has been given before and also in Appendix C.

Another outstanding problem is the development of convenient density operators or measurement probabilities for any receiver configuration and observable. Whether and, if so, how this can be done is uncertain.

The transmitter that we have assumed generates only coherent states or their superpositions. This can be shown to be necessary if the channel output field is going to relate linearly to the input excitations. Moreover, one may want to generate other states at the expense of allowing nonlinearity in the system. Given a channel structure, it may be possible to formulate this problem in a manner analogous to our development. In general, analysis will be complicated by nonlinearity. This problem is interesting enough to deserve much attention.

We have not considered the problem of developing a physical implementation of a given quantum measurement, except for a brief theoretical discussion in Appendix E. This problem is somewhat remote from channel modeling; nevertheless, it is an important matter that is closely connected with a more physical description of communication systems.

Some other generalizations of our theory are discussed in Appendix D. Despite its apparent generality, we conclude that our theory leaves many fruitful areas that are open for further investigation.

Part II. Optimization of Communication System Performance

A. INTRODUCTION AND DETECTION THEORY FORMULATION

In Part II we shall take up the problem of optimizing quantum communication system performance under various performance critieria. We shall concentrate on M-ary digital signal detection and only briefly consider other areas. Our main results are some necessary and sufficient conditions on general optimal receiver specification in quantum detection theory. We have not yet seriously exploited the applications of these conditions.

1.1 Relation to Previous Work

In classical communication theory the general mathematical specification of receivers is an important conceptual problem whose solution is well-known. The conceptual problem also arises in quantum communication theory, but the general solution is still to be found. For digital quantum detection the optimal receiver specification is known only in very special cases,[41,43,44] and no general conditions that the optimal detector must satisfy have been given. The minimum mean-square-error quantum estimate (MMSEQ) of a single random parameter[46] has also been worked out and bounds of the Cramèr-Rao have been given for both random[47] and nonrandom[42] parameter estimations. The measurement observables in these works are restricted, however, to self-adjoint operators. The general MMSEQ in the multiple-parameter case is still unknown, as is the maximum-likelihood quantum (MLQ) estimate. The Wiener-Kalman type of continuous filtering also has no quantum analogy at present.

We shall examine these general specification problems, and give some general conditions on the optimal digital detector, together with some examples illustrating our results. We shall extend some of the previous work on estimation and analog communication. A final summary for Part II will be included with suggestions for treatment of other optimization problems. First, we shall give several careful formulations of the detection problem.

1.2 Background

In establishing the results of Part II we have to pursue mathematical rigor, in contrast to Part I where the precise conditions of validity are relatively unimportant. We shall employ some general optimization theories that are applicable to abstract normed linear spaces. We shall also need certain properties of various spaces of operators corresponding to our quantities of interest. The mathematical theories of these subjects are of relatively recent origin and their detailed exposition may be found in the references; some will be briefly discussed in Appendix H and Appendix I.

1.3 Original Formulation of the Detection Problem

A detailed treatment of quantum channels and the corresponding receiver input density operator representations has been given in Part I. These receiver input density operators are the basic given quantities in the formulation of our detection problems. For present purposes, we model our communication system as in Fig. 6. The $S_j(t)$ which

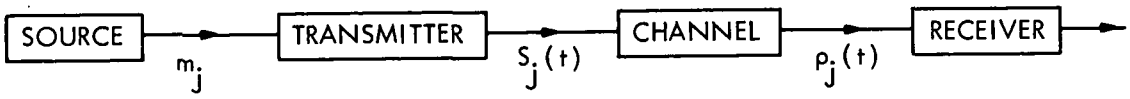

Fig. 6. Simplified representation of quantum communication systems.

represents the message information on the signal is an ordinary time function, and the dependence of ρ_j on j is hidden in some parameters in the expressions of the ρ_j Our ρ's are the analogs of conditional probabilities in the classical case. If the message ensemble is continuous, we still have the same kind of ρ_j representation, the only difference being that now j runs through a continuous set. With this description we can begin to formulate the detection problems.

Let $\mathcal{H}$ be a separable Hilbert space over the complex field $\mathbb{C}$ whose elements are the quantum states $|\ \rangle$ on which our ρ's are defined. Suppose that we have an M-ary equiprobable message alphabet $\{j = 1, \ldots, M\}$ with the corresponding channel output for message j described by the density operator ρ_j. Each ρ_j is therefore a self-adjoint positive semidefinite operator of unit trace on $\mathcal{H}$. [See Appendix H for a brief resume of some basic mathematical definitions and facts that we shall use.]

Suppose that we make a quantum measurement of the observable X on the receiver input. We take the class of measurable operators to be those whose eigenvectors form a complete orthonormal or overcomplete set in $\mathcal{H}$. Thus the measurable operators are the observables that are defined in Appendix A. As discussed in Appendix G, not all such observables have been explicitly shown to be measurable, in the sense that the eigenvectors of the operators are used to compute measurement probabilities and the eigenvalues are the measured parameters. We can therefore make the qualification that X should indeed be measurable in the following formulation. This qualification is not relevant to our work since we feel that such observables can ultimately be shown to be measurable, and in any case we shall not deal with this formulation in its original form. The difficulty arises only if the conjugate Hermitian components of X possess a q-number commutator.

The probability that an eigenvalue x of X is measured, given that the jth message is sent, is then

$$p(x|m_j) = \langle n|\rho_j|x\rangle,$$

where $|x\rangle$ is the eigenvector of X. Let us adopt a possible random strategy with $\pi_j(x)$ being the probability that we decide that the jth message was sent, given the measured value x. The total probability of correct decision is then

$$P[C] = \frac{1}{M} \sum_j \int \langle x | \rho_j | x \rangle \pi_j(x) \, dx. \tag{518}$$

We use the integral here merely as a symbol, in that it represents a sum in the discrete case and an integral over the relevant variables in the continuous case.

In our detection problem we wish to maximize (518) for given ρ_j, subject to the following constraints. First, the eigenvectors $|x\rangle$, which we use to imply either complete orthonormal or overcomplete[116] must be complete. Thus

$$\int |x\rangle \langle x| \, dx = I, \tag{519}$$

where I is the identity operator on $\mathcal{H}$. The decision function $\pi_j(x)$ obeys

$$\pi_j(x) \geq 0 \qquad \forall j \tag{520}$$

$$\sum_j \pi_j(x) = 1. \tag{521}$$

Then the problem is to maximize (518), subject to (519)-(521). To be precise we have also to add the constraint that the resulting X be measurable.

This formulation of the detection problem, which we call 0, is the most accurate and general one. It is very difficult to handle, however, because of the dependence of $\pi_j(x)$ on the parameter x which is still unknown. Therefore it is necessary to transform it to a more convenient form. Helstrom[41] first gave an operator formulation of the problem in which he considered only orthonormal sets $\{|x\rangle\}$. Particular caution should be used when including overcomplete sets. We shall develop several formulations of the detection problem for orthonormal sets $\{|x\rangle\}$ and for general complete sets.

1.4 Operator Formulation of the Detection Problem

Let us introduce the detection operators[41]

$$\pi_j = \int \pi_j(x) |x\rangle \langle x| \, dx, \tag{522}$$

where we have let all π_j be simultaneously diagonal in a complete set $\{|x\rangle\}$ so that the decision can be made by measuring X. Then condition (521) is equivalent through (519) to the operator constraint

$$\sum_j \pi_j = I, \tag{523}$$

and (518) can be written in operator form

$$P[C] = \frac{1}{M} \sum_j \text{tr.}\ \pi_j \rho_j. \tag{524}$$

The condition (520) has to be left in its original form in general, since $\{|x\rangle\}$ may be overcomplete. The constraints on the π_j restrict them to be self-adjoint positive semidefinite bounded operators. If $\{|x\rangle\}$ happens to be an orthonormal set, then (520) follows from positive semidefiniteness. In principle, this formulation also includes overcomplete sets.

We then have to maximize (524) by choosing $\{\pi_j\}$, subject to (520), (522), and (523). This problem, which we call I, appears to be little more than a rewriting of our original formulation 0. There is significant difference, however, in the quantities chosen for optimization. With this formulation we have transformed Problem 0 to an operator optimization Problem I. This problem is untractable because the constraint (522) that the π_j be simultaneously expressible in diagonal form in terms of the same complete set is hard to handle. It makes the domain of optimization nonconvex and it cannot be expressed as an explicit equality constraint. We must therefore consider some variants of the problem.

1.5 Broader Operator Formulation of the Detection Problem

A more general problem, which we call II, can be set up by dropping the difficult constraint (522). Thus Problem II is: Given $\{\rho_j\}$, maximize (524) by choosing positive semidefinite self-adjoint bounded operators $\{\pi_j\}$, subject to (523).

The solution set of π_j of Problem II is not guaranteed to be simultaneously expressible in diagonal form in the same set of vectors. Even if they are simultaneously diagonal in an overcomplete representation, the $\pi_j(x)$ are not necessarily positive for all x. Furthermore, their simultaneously diagonal representation, if it exists, may not be measurable. Nevertheless, this formulation is useful because it permits exact solutions and may yield a usable set for the original problem. Its solution will yield at least an upper bound on the probability of correct decision given by (524).

1.6 Operator Formulation Allowing Only Self-Adjoint Observables

When we are restricted to measurements of self-adjoint operators, the usual observables that are referred to in quantum theory, the original formulation can be greatly simplified. We first observe that the use of a nonrandom strategy for any complete set $\{|x\rangle\}$ is generally optimum. In fact, once the set $\{|x\rangle\}$ is given, we can only do worse by using a random strategy, just as in the classical case. Thus without loss of optimality we can take

$$\pi_i(x)\, \pi_j(x) = 0, \qquad i \neq j. \tag{525}$$

For Problems I and II the application of (525) does not lead to simplifcation of the constraints, because of the possibility of overcomplete $\{|x\rangle\}$. When $\{|x\rangle\}$ is

orthonormal, from (522) and (525), we have

$$\pi_i \pi_j = 0 \qquad \forall\ i \neq j. \tag{526}$$

Lemma 1

The constraints (526) are equivalent through (523) to the smaller set of conditions

$$\pi_i^2 = \pi_i. \tag{527}$$

Proof: Multiplying both sides of (523) by π_i, we have (527) immediately. Given (523) and (527), conditions (526) follow from the theorem,[135] which states that a finite sum of projection operators is a projection operator if and only if the operators are pairwise orthogonal.

Note that (526) implies, in particular, that

$$[\pi_i, \pi_j] = 0, \qquad \forall\ (i,j). \tag{528}$$

While an arbitrary set of commuting self-adjoint operators may not possess a complete orthonormal set of simultaneous eigenvectors, our $\{\pi_j\}$ do have such a simultaneous set. Since this point is of some importance we state the following lemma.

Lemma 2

Our detection operators obeying (523) and (527) possess many complete orthonormal sets of simultaneous eigenvectors.

Proof: Such operators $\{\pi_j\}$ are orthogonal projection operators so that their ranges are orthogonal subspaces of $\mathcal{H}$. Within each of these subspaces any complete orthonormal set can be formed which automatically has eigenvectors of all of the $\{\pi_j\}$. Adjoining all such sets, we have a complete orthonormal set of simultaneous eigenvectors for the $\{\pi_j\}$. Different choices of eigenvector subsets in each subspace give rise to different sets of simultaneous eigenvectors.

By restricting ourselves to self-adjoint operators, our Problems 0 or I are transformed to the problem, which we call III, of maximizing (524), subject to (523) and (526) or (527). Note that the $\{\pi_j\}$ are automatically positive semidefinite under these constraints. Furthermore, the solution set of this problem is guaranteed by Lemma 2 to be simultaneously diagonal in many complete orthonormal sets. The general quantum measurement of a self-adjoint observable possessing a complete set of eigenvectors is explicitly shown in Appendix G to be possible in principle. The many complete orthonormal simultaneous eigenvector sets are all equivalent in detection error performance.

1.7 Conclusion

We have given three different operator formulations of the detection problem. These formulations of digital error minimization with equiprobable messages are actually as general as an arbitrary quantum M-ary decision problem. For the Bayes or the Neyman-Pearson criteria we are led to minimize the average cost

$$\bar{C} = \sum_{i=1}^{M} \sum_{j=1}^{M} p_j C_{ij} \int \langle n | \rho_j | x \rangle \pi_i(x)\, dx$$

$$= \sum_i \int \langle x | \rho_i' | n \rangle \pi_i(x)\, dx \tag{529}$$

with

$$\rho_i' = \sum_j p_j C_{ij} \rho_j .$$

Thus our previous formulations remain the same except for substitution of the ρ_j' for ρ_j. The ρ_j' are also positive semidefinite self-adjoint operators of the trace class.

B. OPTIMAL DETECTOR SPECIFICATION AND EXAMPLES

We shall derive some necessary and sufficient conditions on the optimizing set $\{\pi_j\}$ for the detection problems II and III formulated in Part II-A. Some simple examples illustrating the usefulness of our results will also be given. A brief description of some optimization methods that we employ is given in Appendix I, and certain mathematical definitions and properties are listed in Appendix H. There will be no discussion of background material here.

2.1 Conditions on Optimal Detectors of Problem II

We start with Problem II where, for given $\{\rho_j\}$, we want to maximize

$$\sum_j \text{tr. } \pi_j \rho_j, \tag{530}$$

subject to the constraint

$$\sum_j \pi_j = 1, \tag{531}$$

by choosing the positive semidefinite self-adjoint bounded operators π_j on $\mathcal{H}$. We shall derive our results for Problem II from its dual Problem IId. For this purpose, we consider the Banach space of trace-class operators $\tau \subset \mathscr{B}$,[136] where $\mathscr{B}$ is the normed linear space of all bounded linear operators on $\mathcal{H}$. Let $S \subset \tau$ be the normed linear space of self-adjoint finite trace operators[136] over $\mathbb{R}$. Let P be the positive cone of positive semidefinite operators in S which defines the partial order $\geqslant$.[137, 138] It is obvious that P is indeed a closed convex cone in S. [See Appendix H for definitions of these terms.]

We suggest that the dual problem of II, which we call IId, is

$$\min_{\lambda \in S} \text{tr. } \lambda, \tag{532}$$

subject to

$$\lambda \geqslant \rho_j \qquad j = 1, \ldots, M \tag{533}$$

for given $\{\rho_j\}$. We have to first establish a few points before we can proceed. The following lemma will be used frequently.

<u>Lemma</u> 3

Let x_1, x_2 be two positive semidefinite self-adjoint operators on an arbitrary Hilbert space. Then

$$\text{tr. } x_1 x_2 \geq 0$$

and (534)

$$\text{tr. } x_1 x_2 = 0$$

if and only if

$$x_1 x_2 = x_2 x_1 = 0. \tag{535}$$

Proof: We need to show first that tr. $x_1 x_2$ is real. This follows from

$$(\text{tr. } x_1 x_2)^* = \text{tr. } (x_1 x_2)^\dagger = \text{tr. } x_2^\dagger x_1^\dagger = \text{tr. } x_2 x_1 = \text{tr. } x_1 x_2.$$

Every positive semidefinite self-adjoint operator admits a unique positive semidefinite square root[138] such that $x_1 = a^2$. Also let $x_2 = b^2$ so that

$$\text{tr. } x_1 x_2 = \text{tr. } a^2 b^2 = \text{tr. } (ab)^\dagger (ab) \geq 0. \tag{536}$$

It follows also from (536) that tr. $x_1 x_2 \geq 0$ if and only if $ab = 0$ so that the lemma follows.

Consider the dual space S^* of S. The elements of S can all be represented as

$$\text{tr. } \pi x \tag{537}$$

for $x \in S$ and $\pi \in V$, where V is the space of self-adjoint bounded operators.[136, 139] Also, it is clear that for each such π, (537) defines a bounded linear functional on S. This representation of elements in S^* is crucial for concrete application to our problem of Theorem I. 1 in Appendix I. The conjugate cone $P^* \subset S^*$ corresponds to positive semidefinite self-adjoint bounded operators; that is, $x^* \in P^*$ can be represented as (537) with π also positive semidefinite. We now want first to establish existence for Problem IId, which is more important to us than uniqueness.

Lemma 4

A solution to Problem IId exists and is unique.

Proof: Consider the larger Hilbert space of Hilbert-Schmidt operators[136] Σ, $\mathscr{B} \supset \Sigma \supset \tau$. Problem IId can be formulated as a minimum norm problem on Σ. The constraints define the domain of optimization as a closed convex set in Σ. Let D be the set of positive semidefinite self-adjoint operators in Σ which satisfy (533). D is obviously convex. Since each set $\{\lambda \mid \lambda \geq \rho_j\}$ is closed for every j, D is also closed. Thus Theorem I. 2 in Appendix I can be applied to yield existence and uniqueness for $\lambda \in D \subset \Sigma$. If we write $\lambda' = \sum_j \rho_j$, we see that the minimum is certainly finite.

Therefore λ is of finite trace and so is in S.

After these preliminaries we may now state a theorem.

Theorem 14

There exists a set $\{\pi_j\}$ which can be used to solve Problem II. The necessary and sufficient conditions for this optimizing set, in addition to the constraints, are

$$\pi_j(\lambda - \rho_j) = 0 \qquad \forall\, j \tag{538}$$

for an $\lambda \in S$ such that

$$\lambda \geq \rho_j \qquad \forall\, j. \tag{539}$$

Proof: We apply Theorem I. 1 directly to Problem IId. Our f is a linear functional tr. λ defined on S, and the constraint mappings are also linear. It is clear that all conditions of the theorem are satisfied. Thus we have

$$\min_{\lambda \geq \rho_j} \text{tr. } \lambda = \max_{\pi_j \geq 0} \min_{\lambda \in S} \{\text{tr. } \lambda + \sum_j \text{tr. } \pi_j(\rho_j - \lambda)\}, \tag{540}$$

by using the linear functional representation (537) on S so that $\pi_j \in V$. Here $\pi_j \geq 0$ is also defined with respect to the cone of positive semidefinite operators in V. The right-hand side of (540) can be converted to our Problem II.

$$\min_{\lambda \geq \rho_j} \text{tr. } \lambda = \max_{\substack{\pi_j \geq 0 \\ \sum_j \pi_j = 1}} \text{tr. } \sum_j \pi_j \rho_j. \tag{541}$$

The existence of Problem II is therefore given by Theorem I. 1. Furthermore, using the constraint (Eq. 527), we have

$$\sum_j \text{tr. } (\lambda - \rho_j)\pi_j = 0. \tag{542}$$

By Lemma 2, (542) immediately gives

$$(\lambda - \rho_j)\pi_j = \pi_j(\lambda - \rho_j) = 0 \qquad \forall\, j \tag{543}$$

with $\lambda \geq \rho_j$, $\forall\, j$. By Lemma 3 such a λ exists, and the necessity part of the theorem follows. To show sufficiency, we note that in general

$$\text{tr. } \lambda \geq \text{tr. } \sum_j \pi_j \rho_j \tag{544}$$

which follows from (531) and (533). Thus the set $\{\pi_j\}$ which satisfies (542) achieves a

maximum for (530), and sufficiency is demonstrated.

Since we know that the solution of Problem II is not unique, Theorem 14 provides a rather complete characterization of Problem II. We have also the dual problem of choosing one variable, subject to M constraints, whose solution would provide valuable hints on the solution to Problem II. This dual problem may appear to be easier to handle than a unique one. Of course, we can always attempt to solve the system .

$$\pi_j(\lambda - \rho_j) = 0 \qquad \forall\, j \tag{545}$$

$$\lambda \geqslant \rho_j \qquad \forall\, j \tag{546}$$

$$\sum_j \pi_j = 1 \tag{547}$$

$$\pi_j \geqslant 0 \qquad \forall\, j \tag{548}$$

which is quite difficult in general, and may not be useful for our original problem. (Recall the discussion on the nature of Problem II in Section II-A.)

Several interesting properties follow directly from (545)-(548). First, we note that λ, by summation over j on (543), is

$$\lambda = \sum_j \rho_j \pi_j = \sum_j \pi_j \rho_j. \tag{549}$$

This equation is already a condition on the solution set $\{\pi_j\}$. With equation (549) the system of operator equations and inequalities (545)-(548) is also transformed to a system with variables $\{\pi_j\}$ and $\{\rho_j\}$ only. Besides application to Problem III, which will be discussed, Theorem 14 yields immediately the following corollary.

COROLLARY. Suppose that we have found $\lambda \in S$ and a complete set $\{|x\rangle\}$ such that (546) is satisfied and

$$\langle x | \lambda | x \rangle = \max_j \langle x | \rho_j | x \rangle, \tag{550}$$

then the original Problem 0 is solved by measurement of $\{|x\rangle\}$, together with a non-random strategy.

<u>Proof</u>: Given $\{|x\rangle\}$ and λ, let us expand

$$\pi_j = \int \pi_j(x) |x\rangle \langle x| \, dx. \tag{551}$$

Consider

$$\text{tr. } (\lambda - \rho_j)\pi_j = \int \pi_j(x) \{ \langle x | \lambda | x \rangle - \langle x | \rho_j | x \rangle \} \, dx. \tag{552}$$

Employing nonrandom strategy such that $\pi_j(x) \geq 0$, $\forall$ j and $\sum_j \pi_j(x) = 1$, we can set (552) to be zero for every j, which is then equivalent to (551) by Lemma 3. Theorem 14 then insures that (551) provides a solution to Problem II and so to Problem 0, since (531)-(535) are satisfied.

2.2 Conditions on Optimal Detectors of Problem III

We now consider the problem, which we call III, of maximizing (530) by choosing orthogonal projection operators $\{\pi_j\}$, subject to (531). The constraint (Eq. 526 or Eq. 527) makes our problem nonconvex, so that it is difficult to establish existence or global sufficient conditions by use of Kuhn-Tucker theorems.[137] We have then to apply local conditions by taking derivatives. The following theorem is proved in Appendix I.

Theorem 15

A necessary condition for $\{\pi_j\}$ to solve Problem III is Eq. 549:

$$\sum_j \pi_j \rho_j = \sum_j \rho_j \pi_j.$$

A sufficient condition is given by the following theorem.

Theorem 16

A sufficient condition for $\{\pi\}$ to solve Problem III, apart from constraints, is

$$\sum_j \pi_j \rho_j = \sum_j \rho_j \pi_j \tag{553}$$

$$\sum_i \pi_i \rho_i \geq \rho_j \qquad \forall\ j. \tag{554}$$

The solution so found will also solve our original problem.

Proof: For a set $\{\pi_j\}$ satisfying (553) and (554), we see that with

$$\lambda = \sum_j \pi_j \rho_j = \sum_j \rho_j \pi_j$$

the necessary and sufficient conditions of Theorem 14 are satisfied if we apply Eq. 526.

There are actually some more restrictive necessary conditions than Theorem 15. We do not list them here because, at present, they are in a more complicated form, and we think that in a final analysis the sufficient conditions of Theorem 16 are also necessary. It is then important and interesting to establish existence for Problem III explicitly. We now turn our attention to some simple applications of our results.

2.3 Simple Detection Examples

A known solution of Problem I has been found previously[41, 44] for the special case in which the density operators ρ_j pairwise commute. That is,

$$[\rho_i - \rho_j, \rho_k - \rho_\ell] = 0, \qquad \forall\, (i, j, k, \ell). \tag{555}$$

Optimal detector specification and evaluations have been limited to such particular sets of given ρ_j. In this case the observable to be measured has eigenvectors that form the simultaneous diagonal representation of $\rho_i - \rho_j$. It is straightforward to show that the detection operators π_j so constructed satisfy the sufficient conditions of Theorem 16 when the ρ_j satisfy (555).[53] To demonstrate the usefulness of our result, we have then to consider a given set $\{\rho_j\}$ which does not obey (555). Some such simple sets $\{\rho_j\}$ will now be discussed.[53]

When the ranges of ρ_j span a finite dimensional space only, the operator system (545)-(548) reduces to one for finite matrices. Let us consider a particular case in which we are given M pure states ρ_j

$$\rho_j = |j\rangle\langle j| \qquad j = 1, \ldots, M, \tag{556}$$

where the vectors $|j\rangle$ are linear-independent. The projection operators π_j can be chosen to have one-dimensional ranges

$$\pi_j = |\beta_j\rangle\langle\beta_j| \qquad j = 1, \ldots, M. \tag{557}$$

Applying the necessary condition (Eq. 549) in the $|\beta_j\rangle$-representation, we obtain immediately the equations

$$\langle\beta_m|m\rangle\langle m|\beta_n\rangle = \langle\beta_m|n\rangle\langle n|\beta_n\rangle, \qquad m, n = 1, \ldots, M \tag{558}$$

which have to be solved, together with

$$\langle i|j\rangle = \sum_n \langle i|\beta_n\rangle\langle\beta_n|j\rangle, \qquad i, j = 1, \ldots, M. \tag{559}$$

Note that the system (558)-(559) implies $\frac{1}{2}M(M+1)$ equations with the same number of unknowns. The solution should therefore be optimal in general if an optimum solution exists at all. It is difficult to check the sufficient conditions in general, but we believe that they are automatically obeyed in this case. Note that the necessary condition (558) has also been derived before in a different manner.[50]

Consider a special case in which the given $|j\rangle\langle j|$ obey

$$\langle i|j\rangle = \gamma \qquad i \neq j \tag{560}$$

for a real constant γ independent of i and j. A detection basis where the optimal π_j are constructed can be formed from $|\beta_j\rangle$ which satisfy

$$\langle i|\beta_i\rangle = a \tag{561}$$

$$\langle j|\beta_i\rangle = b \qquad i \neq j, \tag{562}$$

where a and b are real constants independent of i and j. [This particular structure was suggested to the author by Dr. Jane W. S. Liu.] These constants are solutions of

$$\begin{aligned} a^2 + (M-1)b^2 &= 1 \\ 2ab + (M-2)b^2 &= \gamma. \end{aligned} \tag{563}$$

It can be checked that (558) is obeyed for such $\pi_j = |\beta_j\rangle\langle\beta_j|$. The sufficient conditions (554) for this case have also been shown to be satisfied.[53] Generalization of this example to the case of complex γ, a, and b is straightforward.

It can be seen from these examples that our theorems have at least the virtue of enabling verification of conjectured detection operators. The sufficient conditions (554), however, are usually hard to check, especially when the problem does not possess some kind of symmetry. Further work in the simplification or reduction of the sufficient conditions is indeed warranted.

2.4 Conclusion

We have given some necessary and sufficient conditions for the optimal detection operators of Problems II and III. They do not completely characterize the optimal detectors of our problem. It should be possible by the same kinds of techniques or simple extensions of them to generalize considerably these results to yield a more complete solution for the original problem.

Nevertheless, it is meaningful to ask for solutions of our system of operator equations and inequalities specifying the optimum detector. Although methods for dealing with such systems regarding both existence of solution and procedure of solution, do exist,[140, 141, 137, 58] they do not appear to be directly applicable to our situation. It should be fruitful to develop an efficient procedure for the solutions of such sets for both general and specific $\{\rho_j\}$. When $\mathcal{H}$ is finite-dimensional the conditions above would be only on finite matrices where additional methods are available. A numerical solution of the optimizing conditions would not be useful for receiver implementation, at present, although it would provide a bound on error performance.

The examples that we have considered all pertain to Theorem 16. They suggest, together with our general results, that the sufficient conditions(554) should follow from the necessary condition, the constraints, and the obvious optimal choice. A proof

of this important and convenient result has not yet been given. Further applications of our theorems should be exploited, both for the determination of general optimal detector properties and for performance evaluations of realistic channels.

C. OTHER PERFORMANCE OPTIMIZATION PROBLEMS

We shall now treat briefly some quantum optimization problems in other areas of communication theory. This will include mainly certain considerations of estimation and channel capacity. Our pace will be quite rapid, indicating just final results. The derivations are often straightforward. A summary of Part II will be given at the end of this section.

3.1 Estimation of Random Parameters

The general optimal self-adjoint operator for estimation of a single random parameter was first worked out by Personick.[46] The following theorem can be applied to yield the corresponding optimal operator without self-adjoint restriction.

DEFINITION. A pseudo-Hilbert space is a linear vector space X, together with a pseudo inner product defined on the product space $X \times X$. Corresponding to each pair of vectors x, y in X the pseudo inner product (x, y) of x and y is a scalar, taken to be a real number. The pseudo inner product satisfies the following axioms:

1. $(x, y) = (y, x)$
2. $(x+y, z) = (x, z) + (y, z)$
3. $(\lambda x, y) = \lambda(x, y), \qquad \lambda \in \mathbb{R}$
4. $(x, x) \geq 0.$

The corresponding pseudonorm will also be denoted by double vertical bars. The only difference between our pseudo inner product and an ordinary inner product is that $(x, x) = 0$ does not imply $x = 0$ in our case. Our pseudo-Hilbert space is then a pre-Hilbert space whose inner product is a pseudo product. The following theorem is a straightforward generalization of the ordinary projection theorem.[137] Proof of this theorem will be omitted.

Theorem 17

Let X be a pseudo-Hilbert space, M a subspace of X, and x an arbitrary vector in X. A necessary and sufficient condition for $m_o \in M$ to minimize $\|x-M\|$, $m \in M$, is that the error vector $x - m_o$ be orthogonal to M. That is,

$$(x-m_o, m) = 0 \qquad \forall\, m.$$

Suppose that in the estimation of a single real random parameter we choose to measure X, whose eigenvalue x we take to be the estimate of a. The mean-square error is

$$\overline{\epsilon^2} = \overline{\text{tr. } \rho_a (\underline{\bar{X}}-aI)(\underline{\bar{X}}-aI)^\dagger}, \tag{564}$$

where ρ_a is the density operator describing the receiver input. Let p(a) be the a priori distribution of a, and let

$$\bar{\rho} = \int p(a)\, \rho_a \, da \tag{565}$$

$$\rho_1 = \int ap(a)\, \rho_a \, da. \tag{566}$$

A straightforward application of Theorem 17 defines the optimal X_o that minimizes (564) by

$$\bar{\rho}\underline{\bar{X}}_o = \rho_1. \tag{567}$$

When $\bar{\rho}$ is positive definite, a solution X_o clearly exists:

$$\underline{\bar{X}}_o = \bar{\rho}^{-1}\rho_1 \tag{568}$$

which can be shown to be unique. Note that (567) can also be derived by the gradient operator method discussed in Appendix I.

The drawback of condition (567) is that the optimal X_o so found may not be measurable. Again it is difficult to include measurability constraints in a simple way.

Estimation of two real parameters can be equivalently formulated as a problem of estimating one complex variable. In such a case our above formulation carries over directly and the optimal observable is again given by (567), which should now be non-Hermitian. Measurability questions come up as in the single parameter case above.

One way to insure measurability in this two-variables case is to allow for two self-adjoint observables X_1 and X_2 whose eigenvalues correspond to the parameters to be estimated. We then impose in the optimization problem the constraint that X_1 and X_2 commute. While optimizing conditions can readily be developed, they cannot be solved in general. Similar comments apply to the case of multiple parameter estimation.

Bounds of the Cramèr-Rao type on the mean-square error can be derived in this general case similar to the situation where only self-adjoint observables are allowed.[47] They will not be further discussed here.

3.2 Estimation of Nonrandom Parameters

A Cramèr-Rao bound was first given by Helstrom[42] for estimation of a nonrandom real parameter, again restricting the observables to be self-adjoint. The

following bound results when we relax the Hermiticity condition. We first define the mean square error $\overline{\epsilon^2}$ in estimation of a possibly complex nonrandom parameter a to be

$$\overline{\epsilon^2} = \text{tr. } \rho_a(\underline{\overline{X}}-a)(\underline{\overline{X}}-a)^\dagger \tag{569}$$

and also define the operator L whose adjoint obeys

$$\frac{\partial\rho}{\partial a} = L^\dagger\rho. \tag{570}$$

It is then straightforward to show the following theorem.

Theorem 18

The mean-square error (569) is bounded from

$$\overline{\epsilon^2} \geqslant \frac{1}{\text{tr. } \rho_a LL^\dagger}, \tag{571}$$

where the equality holds if and only if

$$L = k(a)(\underline{\overline{X}}-a) \tag{572}$$

for some function k(a) of a.

The difficulty with condition (572) is similar to that associated with (567), namely the optimal observables so found may not be measurable. Note that our formulation here includes estimation of two real nonrandom variables. It is difficult to generalize the bound to the multiple parameter case when the corresponding observables do not commute.

3.3 Channel Capacity

With ρ given for a set of digital messages, we can write for measurement of X the average mutual information

$$I = \sum_j \sum_x p(j) \langle x | \rho_j | x \rangle \log \frac{\langle x | \rho_j | x \rangle}{\sum_j p(j) \langle x | \rho_j | x \rangle}, \tag{573}$$

where the summation notation for x can be interpreted as an integral when x is a continuous variable. The a priori probability for message j is denoted by p(j). We now define the channel capacity to be

$$C = \max_{p(j);\,\underline{\overline{X}}} I.$$

The maximum is taken over all input probability assignments and all possible measurements. With this capacity for discrete memoryless channels it is straightforward to show that both the coding theorem and its converse hold.

Theorem 19

With data rate R smaller than the capacity C of a quantum channel defined above, the probability of error for digital information transmission through the channel can be made arbitrarily small by proper encoding and decoding. Conversly, when R exceeds C the error probability is lower-bounded from zero.

An upper bound on the channel capacity for any measurement observable has been conjectured by Gordon[24] and rigorously proved by Zador.[25] It was known that the bound can be achieved when the ρ_j commute among themselves. By examining Zador's proof in further detail, we have been able to show that the bound can also be achieved when the ρ_j pairwise commute as in Eq. 555. In this case the observable that maximizes C is the same as the one that minimizes detection error. We would conjecture that this coincidence may turn out to be still valid in more general cases, although there is no more than a weak-bound argument in support of this, at present.

In addition to the obvious convexity properties as in the classical case, the average mutual information I can be shown to be a convex U function of the ρ_j. Consider $\underset{\sim}{\rho}$ to be a vector with components ρ_j which are density operators. Then a function $F(\underset{\sim}{\rho})$ is a convex U function of $\underset{\sim}{\rho}$ if

$$F\left(\sum_i \underset{\sim}{\rho}_i \underset{\sim}{\rho}^i\right) \leq \sum_i p_i F(\underset{\sim}{\rho}^i)$$

when $\{\underset{\sim}{\rho}^i\}$ is a set of density operator vectors, and $\{p^i\}$ is a probability vector. This convexity property of I as a function of $\underset{\sim}{\rho}$ is the direct analog of the convexity of ordinary I as a function of the channel conditional probability. They are not going to be discussed further here. We note that there is an interesting open problem which consists in determining the optimal measurements as a function of source rate for the system reliability function.[11,10] One may then obtain a general quantum system reliability function. This problem appears to be extremely difficult.

3.4 Other Problems

There are clearly many other classical communication theoretical problems that need quantum analogs. In the estimation area an outstanding problem is the development of a proper maximum-likelihood quantum estimate (MLQ) for both random and nonrandom parameters. We suggest that the observable X which satisfies

$$\left.\frac{\partial \rho}{\partial a}\right|_{a=\underline{\overline{X}}} = 0 \tag{574}$$

be called the MLQ because of some interesting properties that it possesses, but we shall not discuss it here. Its treatment may be found elsewhere.

Similarly, it is very interesting to develop the quantum counterpart of ordinary Wiener-Kalman filters. While we have not been able to produce any useful results thus far, the existence of such quantum filters appears to be promising. Certainly, there is plenty of room for these and other areas in quantum communication theory.

3.5 Summary of Part II

In Part II, we have considered some problems relating to optimal performance of communication systems under different criteria. Our attention was mainly directed to the M-ary detection problem, the major results of which were some necessary and sufficient conditions of the general optimal detector. While interesting in themselves, further consideration is required in applying our theorems in Section II-B to actual evaluations of system performance.

A major difficulty in our optimization problems is that it is hard to express conveniently the constraint of measurability on the observables that we optimize over. It seems that an accurate determination of the class of measurable observables will be an important basis for system optimization. We hope that this can be achieved by extending the analysis of Appendix E.

It should be clear that there are many interesting open problems of performance optimization in a general quantum communication theory. The importance of such a theory will be uncertain until it is properly developed.

D. GENERAL CONCLUSION

In Part I of this report we have developed a general characterization of quantum communication systems, including the channel and the transmitter-receiver configurations. In particular, a procedure is described which under certain conditions yields the canonical quantum equivalent of a given classical space-time varying linear random channel. We have thus provided a comprehensive framework with which density-operator receiver input representation can be readily obtained for various communication systems.

In Part II we have established some results concerning the optimization of system performance under various criteria. In particular, the general conditions that we provide on the optimal digital detector can be taken as a basis for the development and evaluation of optimal quantum receivers. In conjunction with Part I we have therefore provided some broad principles that are necessary for general quantum communication analysis.

The framework presented in this report is not all encompassing, however. It is therefore appropriate to indicate promising areas for future research. These include extensions and generalizations of our present work, as well as other topics which we have not discussed.

In the area of communication modeling the most outstanding unsolved problem is the general development of a proper field commutator at the channel output from the given classical information only. This should be possible, as mentioned in Part I, either by employing a more detailed mathematical analysis or making more explicit physical assumptions. Many other generalizations are possible, but they appear to be minor in comparison with this problem. When the general field commutator is found, the quantum issues in communication system modeling will have been completely cleared up. This does not mean that the classical quantum transition will be direct and trivial for any classical channel because the classical information has to be given in proper form for application of our correspondence.

Many more problems remain to be solved in the broad field of system optimization. In fact, there are almost as many different areas in quantum communication theory as there are in classical communication theory. Only a few of them have been discussed in this report. Quantum receiver implementation also raises problems that have no classical analogs. All of these problems are challenging and deserve attention. Particular areas that we have not touched upon, but can readily be treated by our methods or their simple extensions, include signal design, linear filtering, and other fields of analog communication theory.

Much work also remains to be done in the development of appropriate procedures for evaluation of realistic system performance from the general principles. In particular, we need practical methods of solving systems of operator equations. Knowledge of operator inequalities will also be very helpful.

Finally, let us observe that while our theories will be most useful only when optical communication systems are sufficiently well-developed, they can actually indicate fruitful areas of device research for applications to such systems.

APPENDIX A

Mathematical Framework of Quantum Theory

We shall give a very brief treatment of the mathematical structure of quantum theory that is most frequently employed. We shall also define a few special notions that will be used in the main content. A common mathematical description of quantum formalism has been provided by von Neumann,[5] Dirac,[111] and Rosen.[112] Alternative and generalized schemes have been given by Jauch,[8] and others.[112-116] Introductory discussions with physical details can be found in Louisell,[74] Dirac,[111] and in textbooks.[142]

A. 1 QUANTUM STATES

A physical system is characterized by a quantum-state space which is the set of possible states in which the system is allowed to be. This set is generally taken to be a separable Hilbert space over the complex field $\mathbb{C}$, with vectors denoted by the Dirac kets

$$|\psi\rangle \tag{A. 1}$$

and inner product between two kets $|\lambda\rangle$ and $|\psi\rangle$ denoted by

$$\langle\lambda|\psi\rangle. \tag{A. 2}$$

[For a summary of certain mathematical definitions and their elementary consequences, which are particularly required in Part II, see Appendix H.] Expression (A. 2) is equivalent to the usual Hilbert space notation

$$(\lambda, \psi). \tag{A. 3}$$

By introducing the concept of a bra vector

$$\langle\lambda|, \tag{A. 4}$$

notation (A. 2) has been found more versatile and convenient than (A. 3). The vectors

$$\alpha|\psi\rangle, \qquad \alpha \in \mathbb{C} \tag{A. 5}$$

represent physical equivalent states so that one usually considers a state to be normalized

$$\langle\psi|\psi\rangle = 1. \tag{A. 6}$$

Separability of the space is equivalent to the condition that there exist in the space countable, complete, orthonormal sequences of vectors. In concrete applications we usually need to choose a particular set of basis vectors, referred to as a representation.

A. 2 QUANTUM OBSERVABLES

Dynamical quantities of the physical system are represented by linear operators on $\mathcal{H}$. Specifically, if A denotes a linear operator, then $A|\psi\rangle$ denotes the transformed

vector which is also in $\mathcal{H}$. Linear operators are frequently abbreviated here as operators. Adjoint of an operator A is denoted by A^+. The set of linear operators on $\mathcal{H}$ forms an algebra.[113, 115] The identity operator I leaves all vectors and operators unchanged, and so is the unit element in the operator algebra. It is convenient to refer to physical variables as "q" or "c" numbers, according to whether they are operators or just ordinary functions. Frequently a multiple of the identity operator is also called a c number.

A dynamical variable is usually called an observable in quantum theory when its corresponding operator A is self-adjoint and possesses a complete set of eigenstates in $\mathcal{H}$. We shall define observables, however, to include all operators having a complete set of eigenvectors. This complete set of eigenvectors may be complete orthonormal or overcomplete,[122] where overcompleteness for a set of states means that a proper subset of states is already complete. The spectrum[5, 8, 87] of A can also be discrete or continuous when it is self-adjoint, and be arbitrary when it is non-Hermitian.

Projection operators occupying a central position in quantum theory are denoted by

$$|\ell\rangle\langle\ell| \tag{A. 7}$$

for projections into one-dimensional subspaces. At the heart of a full exploitation of the Dirac notation is the repeated use of the relation

$$I = \sum_{\ell} |\ell\rangle\langle\ell| \tag{A. 8}$$

or

$$I = \int d\ell\, |\ell\rangle\langle\ell|, \tag{A. 9}$$

which is called a resolution of the identity. Equation A. 8 or A. 9 is valid for an arbitrary set of complete orthonormal basis vectors $\{|\ell\rangle\}$ in the discrete and continuous spectrum cases, respectively. Dirac delta functions are frequently employed to normalize the strictly non-normalizable eigenvectors of a self-adjoint operator A having a continuous spectrum. Such a procedure leads to correct results efficiently when used with proper caution, similar to other use of distributions,[85] or singular functions. In our applications such normalization is not needed.

Our attention is directed primarily to the photon creation and annihilation operators b^+, b which obey the Bose commutation rules

$$[b, b^+] = bb^+ - b^+b = 1. \tag{A. 10}$$

The annihilation operators b possess[119-121] an overcomplete set of eigenstates in $\mathcal{H}$,

$$b|\beta\rangle = \beta|\beta\rangle \tag{A. 11}$$

$$\frac{1}{\pi}\int |\beta\rangle\langle\beta|\, d^2\beta = I \tag{A. 12}$$

$$\langle\beta|\beta'\rangle = \exp\left\{\beta^*\beta' - \frac{1}{2}|\beta|^2 - \frac{1}{2}|\beta'|^2\right\}. \tag{A. 13}$$

Each eigenstate $|\beta\rangle$ is properly normalized with complex eigenvalue β. Representations of states or observables based on the continuous set $|\beta\rangle$ are called "coherent-state representations," since $|\beta\rangle$ are commonly referred to as coherent states with proper justification.[119, 123] While we shall certainly not only consider the observables b and b^+ but also arbitrary functions of them, we shall employ the coherent-state representation when we need to use one.

A. 3 QUANTUM MEASUREMENT INTERPRETATION

Physical interpretation of the states in $\mathcal{H}$ goes as follows. When the system is in $|\psi\rangle$ quantum measurements[5-8] on the observable A would yield possible results a, a point in the spectrum of A, with a probability density

$$|\langle a|\psi\rangle|^2. \tag{A. 14}$$

We have implicitly assumed that the eigenvalues a in (A. 14) are nondegenerate. In general proper modification can be made by summing over the degeneracies. The mean observable value of A is always

$$\langle A\rangle = \langle\psi|\ A\ |\psi\rangle. \tag{A. 15}$$

This interpretation is commonly held as postulates of quantum theory when the observable A is self-adjoint. When A is not, the validity of the interpretation is uncertain. At least in the case of boson operator b (discussed previously) these interpretations[39] can be shown to hold (see also Appendix E). It is partly for this reason that we have broadened the traditional meaning of an observable (see Appendix E).

Higher observed moments of A are given by

$$\langle A^n\rangle = \langle\psi|\ A^n\ |\psi\rangle. \tag{A. 16}$$

Similarly to (A. 15), this is consistent with (A. 14) through application of the spectral representation of A^n. If A is unbounded, then (A.16) may be undefined for certain states. The characteristic function for the distribution of a self-adjoint A in the state $|\psi\rangle$ given by

$$\phi_A(\mu) = \langle\psi|\ e^{i\mu A}\ |\psi\rangle \tag{A. 17}$$

is always defined for any $|\psi\rangle$. (The characteristic functions in non-Hermitian A cases are discussed in Section C. 3. 1c.)

From our interpretation it can be seen that the measured values of an observable A will have a nonzero variance when $|\psi\rangle$ is not an eigenvector of A. Since not all observables can be simultaneously diagonalized for any state $|\psi\rangle$ because of noncommutativity, there are always some observables with a spread in their distribution. This is the essence of the uncertainty principle that dominates physical reasoning in quantum theory.

A. 4 MIXED STATES AND DENSITY OPERATOR REPRESENTATION

The states that we have discussed are usually called "pure states" to distinguish them from the mixed state described by a self-adjoint, positive semidefinite operator of unit trace. A pure state can be represented by these so-called density operators in the form

$$\rho = |\psi\rangle\langle\psi| \tag{A. 18}$$

so that (A. 14) becomes

$$\langle a|\ \rho\ |a\rangle \tag{A. 19}$$

and (A. 16) becomes

$$\mathrm{tr}\ (\rho A^n). \tag{A. 20}$$

A mixed state is a convex combination of pure states. That is,

$$\rho = \sum_{n=1}^{\infty} p_n |\psi_n\rangle\langle\psi_n|, \tag{A. 21}$$

where

$$p_n \geqslant 0 \tag{A. 22}$$

$$\sum_{n=1}^{\infty} p_n = 1. \tag{A. 23}$$

Such a density operator describes an ensemble of pure states. Equations A. 19 and A. 20 clearly retain their validity with the same interpretation. Thus, in general, a complete characterization of a quantum system is given by a density operator. Further general properties and various applications of density operators can be found Fano,[143] Louisell,[74] ter Haar,[144] and von Neumann.[5]

A. 5 DYNAMICAL STRUCTURE

For a conservative system described by a Hamiltonian H, the dynamical equation governing the system behavior is given by the Schrödinger equation

$$i\hbar \frac{d\rho}{dt} = [H, \rho] \tag{A. 24}$$

so that the density operator $\rho(t)$ is time-dependent. This scheme is called the Schrödinger picture, abbreviated as S-picture.

In contrast, another description, called the Heisenberg or H-picture, is obtained if we retain the states or mixed states fixed but instead change the observables in such a way that all expectation values are identical with those calculated in the S-picture. Thus we introduce new time-dependent operators representing observables, determined

in such a way that

$$\mathrm{tr}\ \rho(t)\ A = \mathrm{tr}\ \rho(o)\ A(t). \tag{A.25}$$

Since a general solution of (A. 24) can be written

$$\rho(t) = e^{-iHt/\hbar}\ \rho(o)\ e^{iHt/\hbar}. \tag{A.26}$$

We obtain

$$A(t) = e^{iHt/\hbar}\ A\ e^{-iHt/\hbar} \tag{A.27}$$

which is the time dependence of an observable in the H-picture.

Other pictures can also be formulated in a similar manner, but we shall not discuss them. The interaction, or Dirac, picture was found particularly useful for many problems.

In our treatment we usually assume in a dynamical problem that we are using the S-picture when we talk about density operators and the H-picture when we talk about observables.

When the Hamiltonian H in (A. 24) becomes time-dependent, the evolution of $\rho(t)$ is still given by (A. 24). For other nonconservative systems the precise form of the equations of motion is not known in general. They can be obtained in various ways depending on individual problems.

APPENDIX B

Treatment of the Vector Markov Case

We shall discuss the vector Markov case as a generalization of the strict Markov case treated in the main content of this report. This vector Markov case may be unimportant for the following reason. When the system is linear and is described by a total Hamiltonian, the equation of motion for the fundamental field variables would usually involve time derivatives up to second order only. If a Markov approximation can be made, the equations will then contain only first-order time derivatives and therefore become strictly Markov. We treat the vector Markov case here for generality and for possible situations where higher order derivative loss terms occur.

We discuss directly the quantum case that is readily specialized to the classical situation. Consider the differential equation

$$(\lambda_k + \mathscr{L}_1)\, b_k(t) = f_k(t), \tag{B.1}$$

where the correlations of the noise operator $f_k(t)$ are given by Eqs. 213-215. Suppose that $\mathscr{L}_1$ is of the form

$$\frac{d^n}{dt^n} + a_1(t)\,\frac{d^{n-1}}{dt^{n-1}} + \ldots\ldots + a_n(t)$$

so that with

$$a_n^k(t) = \lambda_k + a_n(t)$$

the differential operator $\lambda_k + \mathscr{L}_1$ is expressed by

$$\lambda_k + \mathscr{L}_1 = \frac{d^n}{dt^n} + a_1(t)\,\frac{d^{n-1}}{dt^{n-1}} + \ldots + a_{n-1}(t)\,\frac{d}{dt} + a_n^k(t). \tag{B.2}$$

We again let $h_k(t, \tau)$ to be the zero-state impulse response of (B.1). We have turned off the excitation at (B.1) for simplicity so that the mean of $b_k(t)$ vanishes. Our following result can be immediately interpreted when $e_k(t)$ is present, by letting $b_k(t)$ be the operator with its mean subtracted.

Let the vector $\underline{X}_k(t)$ be defined by

$$\underline{X}_k(t) = \begin{pmatrix} b_k(t) \\ b_k^{\dagger}(t) \\ b_k'(t) \\ b_k'^{\dagger}(t) \\ \vdots \\ b_k^{n-1}(t) \\ b_k^{n-1\dagger}(t) \end{pmatrix} . \tag{B. 3}$$

Here, $b_k^r(t)$ denotes the rth-order derivative of $b_k(t)$. For each k the vector $\underline{X}_k(t)$ will be a Markov state vector. Define the noise vector

$$\underline{f}_k(t) = \begin{pmatrix} 0 \\ \vdots \\ 0 \\ f_k(t) \\ f_k^{\dagger}(t) \end{pmatrix} \tag{B. 4}$$

and the $2(n-1) \times 2(n-1)$ matrix

$$\underset{\sim}{\Lambda}_k(t) = \begin{pmatrix} 0 & 0 & -1 & 0 \cdots\cdots & & & 0 \\ 0 & 0 & 0 & -1 \;.\; 0 \cdots & & & 0 \\ 0 & \cdots\cdots & & & \ddots & & 0 \\ 0 & \cdots\cdots\cdots & & & & \ddots & \vdots \\ \vdots & & & & & & \\ \vdots & & & & & & 0 \\ 0 & 0 & \cdots\cdots\cdots & & & 0 & \ddots\; -1 \\ a_n^k(t) & 0 & a_{n-1}^k(t) & 0 \cdots\cdots & 0 & a_1(t) & 0 \\ 0 & a_n^{k*}(t) & 0 & \cdots\cdots & & 0 & a_1^*(t) \end{pmatrix} . \tag{B. 5}$$

We can put (B. 1) into the state-variable form

$$\frac{d\underline{X}_k}{dt} = -\underset{\sim}{\Lambda}_k(t)\, \underline{X}_k + f_k(t). \tag{B. 6}$$

It should now be clear that manipulations can be carried out for $\underline{X}_k(t)$ identical to those for $b_k(t)$ in the strict Markov case. We shall therefore only give the final results of importance.

The state transition matrix $\underset{\sim}{h}_k(t, \tau)$ obeying

$$\left[\underset{\sim}{I}\frac{d}{dt} + \underset{\sim}{\Lambda}_k(t)\right]\underset{\sim}{h}_k(t, \tau) = 0, \qquad t > \tau$$

$$\underset{\sim}{h}_k(t, t) = \underset{\sim}{I}$$

is found in terms of $h_k(t, \tau)$ as following $2(n-1) \times 2(n-1)$ matrix

$$\underset{\sim}{h}(t, \tau) = \begin{pmatrix}
(-1)^{n-1}\frac{d^{n-1}}{d\tau^{n-1}}h_k(t,\tau) & 0 & (-1)^{n-2}\frac{d^{n-2}}{d\tau^{n-2}}h_k(t,\tau) & 0 \cdots\cdots 0 & h_k(t,\tau) & 0 \\
0 & (-1)^{n-1}\frac{d^{n-1}}{d\tau^{n-1}}h_k^*(t,\tau) & 0 & (-1)^{n-2}\frac{d^{n-2}}{d\tau^{n-2}}h_k^*(t,\tau) & 0 & h_k^*(t,\tau) \\
(-1)^{n-1}\frac{d}{dt}\frac{d^{n-1}}{d\tau^{n-1}}h_k(t,\tau) & 0 & (-1)^{n-1}\frac{d}{dt}\frac{d^{n-1}}{d\tau^{n-1}}h_k(t,\tau) & 0 \cdots 0 & \frac{d}{dt}h_k(t,\tau) & 0 \\
0 & (-1)^{n-1}\frac{d}{dt}\frac{d^{n-1}}{d\tau^{n-1}}h_k^*(t,\tau) & 0 & & 0 & \frac{d}{dt}h_k^*(t,\tau) \\
\vdots & & & & & \\
(-1)^{n-1}\frac{d^{n1}}{dt^{n1}}\frac{d^{n-1}}{d\tau^{n-1}}h_k(t,\tau) & 0 & & & & \\
0 & (-1)^{n-1}\frac{d^{n-1}}{dt^{n}}\frac{d^{n-1}}{d\tau^{n-1}}h_k^*(t,\tau) & & & & \\
\vdots & & & & \frac{d^{n-1}}{dt^{n-1}}h_k(t,\tau) & 0 \\
0 & (-1)^{n-1}\frac{d^{n-1}}{dt^{n-1}}\frac{d^{n-1}}{d\tau^{n-1}}h_k^*(t,\tau) & & & 0 & \frac{d^{n-1}}{dt^{n-1}}h_k^*(t,\tau)
\end{pmatrix} \tag{B.7}$$

The solution vector is

$$\underline{X}_k(t) = \underline{h}_k(t, t_o)\,\underline{X}_{1R}(t_o) + \int_{t_o}^{t} \underset{\sim}{h}_k(t, \tau)\,\underline{f}_k(\tau)\,d\tau \tag{B.8}$$

or

$$\underline{X}_k(t) = \int_{-\infty}^{t} \underset{\sim}{h}_k(t, \tau)\,\underline{f}_k(\tau)\,d\tau \tag{B.9}$$

under the assumption that the initial distribution arises from $\underline{f}_k(\tau)$. Fluctuation-dissipation relations can be written down similar to Eqs. 234-236. These and other relations can be explicitly obtained by expansion when desired.

One time preservation of the commutator

$$\left[b_k(t), b_k^\dagger(t)\right] = 1$$

can be achieved by solving the integral equation (280), but the solution is now not given by (280). Its explicit form is not important, however. The two-time commutator then follows with the form

$$\left[b_k(t), b_k^\dagger(t')\right] = (-1)^{n-1} \frac{d^{n-1}}{d\tau^{n-1}} h_k(t, \tau)\Big|_{\tau=t'}$$

$$+ \sum_{r=2}^{n} (-1)^{n-r} \frac{d^{n-r}}{d\tau^{n-1}} h_k(t, \tau)\Big|_{\tau=t'} \langle b_k^{r-1}(t')b_k^\dagger(t')\rangle$$

$$- \sum_{r=1}^{n-1} (-1)^{n-1} \frac{d^r}{dt^r} \frac{d^{n-1}}{d\tau^{n-1}} h_k(t, \tau)\Big|_{\tau=t'} \langle b_k^\dagger(t')b_k^r(t')\rangle. \qquad \text{(B. 10)}$$

The one-time averages occurring in (B. 10) can be computed from $h_k(t, \tau)$ and the diffusion coefficients through Eq. 235. The field commutator can also be obtained from (B. 10), although it will now be quite messy. The equal-time commutator is simple, however, and from (B. 10) is

$$\left[\psi_{op}(\bar{r}, t), \psi_{op}^\dagger(\bar{r}', t)\right] = \sum_k \phi_k(\bar{r})\, \phi_k(\bar{r}')(-1)^{n-1} \frac{d^{n-1}}{d\tau^{n-1}} h_k(t, \tau)\Big|_{\tau=t_+}$$

$$= \frac{d^{n-1}}{dt^{n-1}} \sum_k \phi_k(\bar{r})\, \phi_k(\bar{r}')\, h_k(t, \tau)\Big|_{t=\tau_+}$$

$$= \delta(\bar{r}-\bar{r}'). \qquad \text{(B. 11)}$$

Equations B. 10 and B. 11 are all that are really required in our generalization of the Markov case to the vector Markov case.

APPENDIX C

Fluctuation-Dissipation-Amplification Theorems

We shall give a deeper discussion of the fluctuation-dissipation theorems[66, 68, 104-107] employed in Part I and indicate possible generalizations to our general case. We shall also try to interpret the theorems for applications to amplifiers other than attenuators.

C. 1 FLUCTUATION-DISSIPATION THEOREMS

We have only employed fluctuation-dissipation theorems for establishing the field commutators, while at the same time these theorems actually give all of the two-time quantum averages. This puts some constraint on the classical process with mean and covariances given separately. It therefore appears that not all given classical process would obey fluctuation-dissipation theorems. Since such theorems seem to be quite generally applicable and useful both for field commutator specification and for other purposes, we can first observe their nature more closely and then see what kind of conditions are required for their applicability.

The fluctuation-dissipation theorems in the Markov or vector Markov cases are direct mathematical consequences of the Markov character of the processes. No physical assumption is required for their validity. On the contrary, the stationary system fluctuation-dissipation theorems are derived from the so-called linear response theory,[106, 107] which applies to the system plus its environment so that the total system is describable by a Hamiltonian. The form that we use in this report can readily be obtained from M. Lax.[68] The point to be observed here is that once the mean equation of a system observable is known, the two-time fluctuations are also determined, regardless of the details of the reservoir. While elegant in its interpretation and rich in its applications, this theorem is unfortunately restricted to stationary processes.

The nature of the derivation of these stationary fluctuation-dissipation theorems suggests that it is fruitful to consider a stochastic system as part of a conservative system. Some physical assumptions may be involved in such a description. It will be extremely useful if we can then derive some system statistics from the system mean equation independent of the detailed reservoir behavior. Preliminary consideration for generalizing these theorems to the time-variant case results in certain analytical difficulties. It appears nevertheless that such generalizations are quite viable. Another possible route for such generalizations lies in exploiting the mathematical structure of particular classes of random processes. We feel that a development from the physical point of view is likely to be more generally applicable. The physical assumption would illuminate rather than restrict their application to individual problems.

C. 2 FLUCTUATION-AMPLIFICATION THEOREMS

The usual stationary fluctuation-dissipation theorems have not been interpreted or modified to apply to situations in which the system energy is amplified rather than attenuated. We introduce the term fluctuation-amplification theorems to indicate relations that apply to amplifiers that are similar in spirit and in content to the usual fluctuation-dissipation theorems. Such theorems clearly exist in the Markov case, even quantum-mechanically. By proper reinterpretation of the usual stationary fluctuation-dissipation theorems, they should also be applicable to amplification situations, although in such cases the physical nature of the system is more uncertain.

To indicate how such an interpretation may be possible, let us consider Eq. 258 whose right-hand side has to be positive. Let the temperature T in $\bar{n}(\omega)$ of Eq. 260 be negative, and $\mathscr{L}^{I}_{k}(\omega)$ also be negative in the frequency range of interest. Such a negative imaginary part of the 'susceptibility' can be readily seen to imply amplification. A negative temperature also changes the dissipative environment to an amplifying one. We can therefore retain Eq. 257 as consistent when applied to amplifiers. Generalization similar to the fluctuation-dissipation case discussed above should also be possible.

In this connection let us note that the positivity of Eq. 258 puts a fundamental limit on the noise behavior of our system considered as an amplifier. Let us write

$$\bar{\eta}(\omega) = \frac{1}{1 - e^{-\hbar\omega/k_B|T_N|}} \geqslant 0 \tag{C. 1}$$

for a negative temperature T_N. We have

$$\langle F^{\dagger}_{k}(\omega)F_{k}(\omega)\rangle = 2\hbar\,\bar{\eta}(\omega)\,|\mathscr{L}^{I}_{k}(\omega)| \tag{C. 2}$$

$$\langle F_{k}(\omega)F^{\dagger}_{k}(\omega)\rangle = 2\hbar\{\bar{\eta}(\omega)-1\}\,|\mathscr{L}^{I}_{k}(\omega)| \tag{C. 3}$$

so that

$$\bar{\eta}(\omega) \geqslant 1. \tag{C. 4}$$

The minimum noise results when

$$\bar{\eta}(\omega) = 1 \tag{C. 5}$$

whose physical origin is spontaneous emission.

This limit on the minimum noise present in our system appears to be general, at least for systems of the kind considered in the derivation of Eqs. 256 and 257. It should be worthwhile to examine further the generality of (C. 2)-(C. 3) when applied to amplifiers

because we may then access the fundamental noise limit of linear stationary amplifiers in complete generality. Note that the case of a time-variant linear amplifier may have quite different limits.

General considerations of this kind for amplifiers are also important for our purposes, as we recall from Parts I-E and I-F that they influence the specific form of our receiver input density operator representations. In particular, when we implement the integral of Eq. 361 by a matched filter as in Eq. 365, the filter introduces an additive noise obeying (C. 2)-(C. 4).

Let us note that the fluctuation-dissipation-amplification theorems are not necessarily required for specifying field commutators. In fact, we have indicated in section 4. 2 (Part I) how the commutator can be determined from the system representation. In spite of this, we feel that the development of fluctuation-dissipation theorems is of general importance because we can obtain further nontrivial information on the system without additional essential assumptions.

APPENDIX D

Generalized Classical Quantum Correspondence

We shall discuss briefly several generalizations of the theory presented in Part I-D and I-E. This involves the relaxation of many of the assumptions that we have made in our development. The possibilities of these generalizations should be quite apparent from our discussion.

D. 1 NON-GAUSSIAN QUANTUM NOISE

Our Gaussian noise assumption was made primarily to simplify analysis analogous to the classical case. While such an assumption is often justified, it can be relaxed if we impose other structures on the quantum processes. One such structure is a quantum Markov process defined in section 3. 2. 4. There are many non-Gaussian Markov processes even within the Fokker-Planck-Kolmogorov regime. If we allow a 'generalized' Fokker-Planck description, further non-Gaussian processes can be taken into account. In a classical quantum correspondence we can set all given classical diffusion coefficients to be the normal ordered quantum diffusion coefficients. A two-time commutator in such a non-Gaussian case is still given by our Markov results, as they depend in no way on Gaussian assumptions. It should be clear that all of our theory can be straightforwardly carried through in principle in this Markov case, although added difficulties may arise in density operator calculations.

D. 2 INCLUSION OF SPATIAL DISSIPATION

Our assumption (Eq. 11) has been used only to the extent of simplifying analysis in a number of places. It is by no means essential. With the assumption about the noise source correlations that we have made in Eqs. 17 and 18 this assumption is not really required in most of our treatment. It will be required, however, in order to retain the simplicity of our development when the classical noise sources are spatially white. At the expense of considering coupled equations, we can always employ the noise normal modes. We shall see in Appendix F that there frequently exists a mode expansion with independent amplitudes, even when $\mathscr{L}_2$ is dissipative, so that Eqs. 17 and 18 are in fact not unusual.

D. 3 COUPLED SPACE AND TIME DERIVATIVES

When the operator $\mathscr{L}$ of Eq. 1 does not factorize as in Eq. 5 our treatment cannot be held to be valid. When a mode expansion is not needed it may be possible to regard the field commutator as given by the unperturbed Green's function, in the approximation that we discuss in Part I-F. Unfortunately, even the unperturbed Green's function would be very complicated in such a case.

APPENDIX E

Theory of Quantum Measurements

We shall give a brief development of quantum measurement theory which is of prime importance both for receiver implementation and for specifying a meaningful range of measurement optimization. Let us first indicate the nature of our following analysis.

E. 1 INTERACTION HAMILTONIAN ANALYSIS OF QUANTUM MEASUREMENTS

When we make a microscopic measurement on a system, we invariably let it interact with a measuring apparatus which in turn produces a macroscopic trace as a result of the interaction. We shall not reproduce the many discussions[5-9] about the philosophy and physical nature of quantum measurements. It suffices for our purpose to note that the system-apparatus interaction, which is essential for quantum measurements, has to be treated in a quantum theoretical fashion as was emphasized by Bohr. (Actually for a classical measurement too, but one can assume that the disturbance of the system because of this interaction can be made arbitrarily small in the classical case.) Since it would be extremely complicated, even in the classical case, to treat the actual functioning of the measuring apparatus, we take a simple view that an appropriate set of apparatus observables will have a macroscopic manifestation or can be measured in some other way after the system-apparatus coupling. This is in accordance with the Copenhagen interpretation of quantum theory. Our measurement problem consists in elucidating this system-apparatus interaction in the measurement. The philosophy or nature of this interaction Hamiltonian approach for receiver implementation is actually a more delicate problem which we shall not discuss further.

The description of measurements by an interaction Hamiltonian was first introduced by von Neumann,[5] with a different purpose from ours. It has also been considered more recently by Gordon and Louisell [37, 38] with some generality. Arthurs and Kelly[39] have given a particularly interesting example of such treatment. The following consideration is an extension and generalization of these works.

We give a more quantitative description now. For simplicity, we restrict ourselves to the case in which the apparatus can be considered to be initially in a pure state, which we write

$$|\psi^A\rangle.$$

We describe the system at the beginning of our measurement by a density operator

$$\rho^S$$

where the superscripts have their obvious meanings. The measurement is carried

out by letting the system plus apparatus interact with an interaction Hamiltonian

$$H_I = \sum_i p_i s_i \qquad i = 1, \ldots, N \tag{E.1}$$

where the p_i are a set of commuting apparatus observables, and the s_i are a set of system observables. We are dealing in general with N apparatus degrees of freedom. Note that this form of H_I is very general. The usual impulsive-interaction approximation[6] can be made which says that H_I dominates the evolution of the system plus apparatus for a short time after they are coupled. At a certain short time afterwards one then observes an appropriate set of apparatus observables, the values of which are indicative of the measured values of some corresponding system observables. If $\{q_i\}$ is the set of apparatus observables being looked at, then the probability of obtaining a set of values $\{\bar{q}_i\}$ is given in general by

$$P(\{\bar{q}_i\}) = \mathrm{Tr}\left[I(\{\bar{q}_i\})\,\rho^s I^\dagger(\{\bar{q}_i\})\right], \tag{E.2}$$

where

$$I(\{\bar{q}_i\}) = \langle \{\bar{q}_i\} | U(t) | \psi^A \rangle \tag{E.3}$$

$$U(t) = e^{-itH_I/\hbar} = \exp\left[-it/\hbar \sum_i p_i s_i\right]$$

$$|\{\bar{q}_i\}\rangle = |\bar{q}_1\rangle \ldots |\bar{q}_i\rangle \ldots |\bar{q}_N\rangle$$

and the system is left in the mixture

$$\rho_f^s(t) = \frac{I(\{\bar{q}_i\})\,\rho^s I^\dagger(\{\bar{q}_i\})}{P(\{\bar{q}_i\})} \tag{E.4}$$

by applying the projection postulate to the apparatus. (The projection postulate, first formulated explicitly by von Neumann,[5] states that if an observable X is measured on a system with a result x, then the system is left immediately after the measurement in the eigenstate $|x\rangle$ corresponding to x. We speak about a nondegenerate spectrum throughout for simplicity. The case of a degenerate spectrum can be easily included.) The probability in (E.2) is also the probability of finding the system in mixture given by (E.4). Note that $\rho_f^s(t)$ would depend on an initial system state unless $I(\{\bar{q}_i\})$, which is a system operator, factorizes into the form of a generalized projection operator (dyad)

$$I = |\psi_t^s\rangle\langle\psi_t^m|, \tag{E.5}$$

in which case

$$P(\{\bar{q}_i\}) = \langle \psi_t^m | \rho^s | \psi_t^m \rangle \tag{E. 6}$$

and

$$\rho_f^s(t) = |\psi_t^s\rangle \langle \psi_t^s|. \tag{E. 7}$$

Here the $\{\bar{q}_i\}$ is parametrically related to the eigenvalues of $|\psi_t^m\rangle$ which is the eigenstate of a certain system operator. These results can be derived rigorously. These derivations are omitted here for brevity. We can also allow I to depend on $|\psi^A\rangle$ or not, by proper adjustment of $|\psi^A\rangle$. The case wherein I factorizes as it does above and does not depend on $|\psi^A\rangle$ was called an <u>ideal</u> <u>measurement</u> by Gordon and Louisell.[37,38] We can relax the condition of $|\psi^A\rangle$ independence, however, which to us is no less "ideal" than the other case.

If we consider ideal measurements (in either of the two senses mentioned), then we can say that the measurement scheme described above corresponds to the measurement of the system observable X.

$$X|x\rangle = x|x\rangle,$$

with

$$|x\rangle = |\psi_t^m\rangle.$$

In all of the known situations, it turns out that

$$|\psi_t^s\rangle = |\psi_t^m\rangle.$$

Note, however, that X does not have to be self-adjoint. The only requirement is that it have a complete set of right eigenstates. One would then tend to ask how we can measure such an X in an ideal measurement. This consists in finding an H_I, a set of $|\{\bar{q}_i\}\rangle$, and an $|\psi^A\rangle$, in our case, so that $|\psi_t^m\rangle$ is the eigenstate of X. To this question we now turn our attention.

E. 2 MEASUREMENT OF OBSERVABLES

We now show explicitly how a quantum measurement can be accomplished in the framework described above. Let us consider the measurement of a self-adjoint system observable S. For this purpose, we choose

$$H_I = pS \tag{E. 8}$$

for an apparatus observable p whose conjugate variable is q. From the Heisenberg

equation of motion, we have

$$\frac{dq}{dt} = S$$

$$\frac{dp}{dt} = 0,$$

so that q is the observable that we should measure. Let us, for simplicity, choose

$$|\psi^A\rangle = |q_o\rangle \tag{E. 9}$$

In this situation we arrive at

$$I = |S = q - q_o\rangle \langle S = q - q_o|,$$

where we have taken the measurement time to be one. The state $|S = q - q_o\rangle$ is an eigenstate of S whose eigenvalue is $q - q_o$. An ideal measurement for S is now achieved by observing q.

In a sense this discussion demonstrates that every self-adjoint observable can be measured in principle. On the other hand, the argument can be regarded as circular, since we have now to observe q. When we can make a macroscopic record on the outcome q this interacting Hamiltonian method may be considered as a satisfactory way of doing quantum measurements. In any case we have illustrated the power of our approach and the kind of measurements that can be made with this scheme.

Similarly, we can show that we shall be able to measure a system photon operator b with

$$[b, b^\dagger] = 1,$$

by choosing

$$H_I = p_1 P + p_2 Q \tag{E. 10}$$

whose p_1 and p_2 are two commuting apparatus observables, and P and Q are related to $b, b^\dagger$ as usual,

$$b = \frac{1}{\sqrt{2\hbar\omega}} (P - i\omega Q). \tag{E. 11}$$

In this case the conjugate variables q_1 and q_2 of p_1 and p_2, respectively, should be observed. Furthermore, the apparatus initial state should be chosen as a product of two coherent states whose parameters are determined by ω of (E. 11). It is

then straightforward to show that the system operator I of (E. 3) factorizes into

$$|\beta\rangle\langle\beta|,$$

where $|\beta\rangle$ is the eigenstate of b. A detailed derivation is omitted here.

Assume that a system observable $\underline{\overline{X}}$ possesses a complete set of eigenstates. In general we can write

$$\underline{\overline{X}} = \underline{\overline{X}}_1 + i\underline{\overline{X}}_2,$$

where both $\underline{\overline{X}}_1$ and $\underline{\overline{X}}_2$ are Hermitian. The commutator

$$[\underline{\overline{X}}_1, \underline{\overline{X}}_2] = i\underline{\overline{X}}_3$$

will involve a Hermitian operator $\underline{\overline{X}}_3$ which may not be a c-number. In this case we have not yet been able to measure such an $\underline{\overline{X}}$ with our approach. It appears, however, that such an $\underline{\overline{X}}$ should indeed be measurable in our sense. Further effort is required to fix up this important point.

APPENDIX F

Relations of Linear Fields

We shall derive certain relations between the fundamental field variables, in particular those between the electric field $\mathscr{E}_{op}(\bar{r}, t)$ and our $\psi_{op}(\bar{r}, t)$. Our relation here is general, and more explicit relations have to be obtained depending on individual cases.

We first observe that given a commutator

$$[\mathscr{E}_{op}(\bar{r}, t), \dot{\mathscr{E}}_{op}(\bar{r}, t)] = C_{\epsilon}(\bar{r}\,\bar{r}'; tt'), \tag{F. 1}$$

there will frequently exist, even when $\mathscr{L}$ of Eq. 1 is not of the form of Eq. 5, spatial modes $\phi_k(\bar{r})$ such that

$$C_{\epsilon}(\bar{r}\,\bar{r}'; tt') = \sum_k \phi_k(\bar{r})\, \phi_k(\bar{r}')\, C_k(t, t'), \tag{F. 2}$$

where

$$C_k(t, t) = i\hbar. \tag{F. 3}$$

Karhunen-Loève expansion of the form (F. 2) holds for a given field $C_{\epsilon}(\bar{r}\,\bar{r}'; tt')$ under rather general conditions. In such a case we can expand

$$\mathscr{E}_{op}(\bar{r}, t) = \sum_k \phi_k(\bar{r})\, q_k(t) \tag{F. 4}$$

$$\dot{\mathscr{E}}_{op}(\bar{r}, t) = \sum_k \phi_k(\bar{r})\, p_k(t) \tag{F. 5}$$

$$[q_k(t), \dot{q}_k(t)] = i\hbar. \tag{F. 6}$$

We neglect a possible multiplicative constant to $\mathscr{E}(\bar{r}, t)$ which, depending on both the medium and the units, makes $\mathscr{E}_{op}(\bar{r}, t)$ the ordinary electric field.

Let us introduce another set of mode functions $\Phi_k(\bar{r})$

$$\nabla \times \Phi_k(\bar{r}) = \phi_k(\bar{r}) \tag{F. 7}$$

so that the magnetic field, also up to a multiplicative constant, is

$$\mathscr{H}_{op}(\bar{r}, t) = \sum_k \Phi_k(\bar{r})\, p_k(t). \tag{F. 8}$$

The commutator between $\mathscr{E}_{op}(\bar{r}, t)$ and $\mathscr{H}_{op}(\bar{r}, t)$ is therefore

$$[\mathscr{E}_{op}(\bar{r}, t), \mathscr{H}_{op}(\bar{r}', t')] = \sum_k \phi_k(\bar{r})\, \Phi_k(\bar{r})[q_k(t), p_k(t')]. \tag{F. 9}$$

We further define the photon operators $b_k(t)$ for k:

$$b_k(t) = \frac{1}{\sqrt{2\hbar\omega}} \{p_k(t) - i\omega q_k(t)\} \tag{F. 10}$$

so that

$$\left[b_k(t), b_k^\dagger(t) \right] = 1 \tag{F. 11}$$

and consider the field variables

$$\psi_{op}(\bar{r}, t) = \sum_k \phi_k(\bar{r})\, b_k(t). \tag{F. 12}$$

It is clear from (F. 12) and (F. 10) that $\psi_{op}(\bar{r}, t)$ is related linearly to $\mathscr{E}_{op}(\bar{r}, t)$ and $\dot{\mathscr{E}}_{op}(\bar{r}, t)$. An explicit relation appears to be difficult to find in general even if there is one, but can be found when either the time behavior of $q_k(t)$ or the spatial behavior of $\phi_k(\bar{r})$ is known, together with the dispersion relation ω_k. With generalized functions allowed, $\dot{\mathscr{E}}_{op}(\bar{r}, t)$ is related linearly to $\mathscr{E}_{op}(\bar{r}, t)$ so that in general we can write

$$\psi_{op}(\bar{r}, t) = \int h(\bar{r}t; \bar{r}'t')\, \mathscr{E}_{op}(\bar{r}', t') \tag{F. 13}$$

for a deterministic filter $h(\bar{r}t; \bar{r}'t')$. Frequently either a spatial or a temporal filter is already sufficient for relating $\psi_{op}(\bar{r}, t)$ and $\mathscr{E}_{op}(\bar{r}, t)$.

Suppose that a possible random Green's function $G_R(\bar{r}t; \bar{r}'t')$ is given relating the input electric source field to the output electric field of a transmission medium

$$\mathscr{E}_{op}(\bar{r}, t) = \int G_R(\bar{r}t; \bar{r}'t')\, \mathscr{E}^s_{op}(\bar{r}', t')\, d\bar{r}'dt' \tag{F. 14}$$

when both the signal and the noise sources are included in $\mathscr{E}^s_{op}(\bar{r}, t)$. The random Green's function $\tilde{G}_R(\bar{r}t; \bar{r}'t')$ for $\psi_{op}(\bar{r}, t)$ is then

$$\psi_{op}(\bar{r}, t) = \int \tilde{G}_R(\bar{r}t; \bar{r}'t')\, \psi^s_{op}(\bar{r}', t')\, d\bar{r}'dt', \tag{F. 15}$$

where

$$\tilde{G}_R(\bar{r}t; \bar{r}'t') = \int h(\bar{r}t; \bar{r}''t'')\, G_R(\bar{r}''t''; \bar{r}'''t''')\, h^{-1}(\bar{r}'''t''', t'\bar{r}')\, d\bar{r}''d\bar{r}'''dt''dt''' \tag{F. 16}$$

$$\int h(\bar{r}t; \bar{r}''t'')\, h^{-1}(\bar{r}''t''; \bar{r}'t')\, d\bar{r}''dt'' = \delta(\bar{r}-\bar{r}')\, \delta(t-t'). \tag{F. 17}$$

The filter $h^{-1}(\bar{r}t; \bar{r}'t')$ is the inverse of the filter $h(\bar{r}t; \bar{r}'t')$.

We next assume that $\psi_{op}(\bar{r}, t)$ has the commutator

$$[\psi_{op}(\bar{r}, t), \psi_{op}(\bar{r}', t')] = C_\psi(\bar{r}t; \bar{r}'t') \tag{F. 18}$$

The commutator $C_\epsilon(\bar{r}t;\bar{r}'t')$ of Eq. F. 1 is then given by

$$\sum_k \phi_k(\bar{r})\,\phi_k(\bar{r}')[q_k(t), p_k(t')] = \sum_k \phi_k(\bar{r})\,\phi_k(\bar{r}')\,\frac{i\hbar}{2}\left\{\left[b_k(t), b_k^\dagger(t')\right] + \left[b_k(t'), b_k^\dagger(t)\right]\right\} \tag{F. 19}$$

or

$$C_\epsilon(\bar{r}t;\bar{r}'t') = \frac{i\hbar}{2}\left\{C_\psi(\bar{r}t;\bar{r}'t') + C_\psi(\bar{r}t', \bar{r}', t)\right\}. \tag{F. 20}$$

Finally, let us observe that our commutator specification has favored observables of the kind $\mathscr{E}_{op}(\bar{r}, t)$ and $\psi_{op}(\bar{r}, t)$ discussed above where the operator character is put on the time amplitudes. Equivalently, we may construct spatially dependent operators to advantage in certain cases. The corresponding commutators can be formed and related similarly.

APPENDIX G

Direct Calculation of Density Operators from Fields

We shall give an explicit proof that the procedure leading to the construction of density operators for different receiver configurations as described in section 5.5.1 (Part I) is indeed correct. Our discussion should also demonstrate how a sum of independent quantum observables may be described by a single density operator in the manner of section 3.1.6 (Part I). We shall proceed rather rapidly, but the details can be filled in without difficulty.

We wish to show that density-operator representations can be calculated directly from a statistical specification of $\psi_{op}(\bar{r}, t)$. The basic point to observe is that for a field $\psi_{op}(\bar{r}, t)$ of the kind in Eq. 193 there are infinitely many Schrödinger photon operators b_n with

$$\left[b_n, b_{n'}^{\dagger}\right] = \delta_{nn'} \tag{G.1}$$

$$[b_n, b_{n'}] = 0 \tag{G.2}$$

so that $\psi_{op}(\bar{r}, t)$ is a linear combination of the b_n. Thus the linear functional

$$a_k = \int \psi_{op}(\bar{r}, t)\, W_k(\bar{r}, t)\, d\bar{r}dt \tag{G.3}$$

is also a linear combination of the b_n. We write

$$a_k = \sum_n \ell_{kn} b_n. \tag{G.4}$$

Suppose that the set a_k obeys

$$\left[a_k, a_{k'}^{\dagger} = \delta_{kk'}\right] \tag{G.5}$$

$$[a_k, a_{k'}] = 0. \tag{G.6}$$

The transformation matrix $\underset{\sim}{L}$ which is defined by

$$\underline{a} = \underset{\sim}{L}\,\underline{b} \tag{G.7}$$

$$(\underset{\sim}{L})_{ij} = \ell_{ij} \tag{G.8}$$

is thus unitary from (G.5)-(G.6).

Each of the b_n is described by a P-distribution, $P_n(\beta_n, \beta_n^*)$, so that the density operator describing the field $\psi_{op}(\bar{r}, t)$ can be generally given by

$$\rho = \prod_n \int P_n\left(\beta_n, \beta_n^*\right) |\beta_n\rangle\langle\beta_n| \, d^2\beta_n. \tag{G. 9}$$

Introducting the antinormal ordering operator

$$\delta(b_n-\beta_n)\ \delta\left(b_n^\dagger-\beta_n^*\right) = |\beta_n\rangle\langle\beta_n| \tag{G. 10}$$

and making a transformation to a_k and the corresponding α_k, we have

$$\rho = \prod_n \int P_n\left(\sum_k \ell'_{nk}\alpha_k, \sum_k \ell'^*_{nk}\alpha_k^*\right) \prod_k d^2\alpha_k\ \delta(a_k-\alpha_k)\ \delta\left(a_k^\dagger-\alpha_k^*\right). \tag{G. 11}$$

Here ℓ'_{nk} is the nk^{th} element of $\underset{\sim}{L}^{-1}$, the inverse of L. We can now write

$$\rho = \mathscr{A} \prod_n P_n\left(\sum_k \ell'_{nk}\alpha_k, \sum_k \ell'^*_{nk}\alpha_k^*\right). \tag{G. 12}$$

On the other hand, the P-distribution of $(\underline{\alpha}, \underline{\alpha})$ as calculated by the procedure of section 5. 5. 1 (Part I) will turn out to be

$$P(\underline{\alpha}, \underline{\alpha}^*) = \prod_n P_n\left(\sum_k \ell'_{nk}\alpha_k, \sum_k \ell'^*_{nk}\alpha_k^*\right) \tag{G. 13}$$

so that

$$\rho = \mathscr{A}\, P(\underline{\alpha}, \underline{\alpha}^*) \tag{G. 14}$$

is the same as (G. 12). It can be seen that all that we have done is to make a change of variables in ρ. When the transformation is unitary the $\underline{\alpha}$ variables possess properties exactly identical to the $\underline{\beta}$ variables. As the properties of $\underline{\alpha}$ can be obtained directly from the statistics of $\psi_{op}(\bar{r}, t)$ we can give $\rho(\underline{a}, \underline{a}^\dagger)$ without the knowledge of $\underset{\sim}{L}$ and $\rho(\underline{b}, \underline{b}^\dagger)$.

When the vector $\underline{a}^F$ is finite dimensional it may be possible to extend it to an infinite dimensional vector $\underline{a}$ which is unitarily related to $\underline{b}$. In such a case the P-distribution of the finite dimensional $\underline{a}^F$ is clearly

$$P(\underline{\alpha}^F, \underline{\alpha}^{F*}) = \int \prod_{i \notin F} d^2\alpha_i\ P(\underline{\alpha}, \underline{\alpha}^*) \tag{G. 15}$$

and the corresponding density operator will be

$$\rho^F = \mathscr{A}\, P(\underline{\alpha}^F, \underline{\alpha}^{F*}) = \mathrm{tr.}_{\{a_i,\, i \neq F\}}\rho \tag{G. 16}$$

and so is the correct reduced density operator for $\underline{a}^F$. In particular, when $\underline{a}^F = a$ is one-dimensional the density operator for "a" can be constructed by our procedure.

In the situation

$$\left[a_k, a_{k'}^{\dagger}\right] \neq 0 \qquad k \neq k', \tag{G. 17}$$

or in addition

$$[a_k, a_{k'}] \neq 0 \qquad k \neq k', \tag{G. 18}$$

our procedure of calculating $\rho(\underline{a}, \underline{a}^{\dagger})$ may not be valid, since in (G. 13) there will be an additional determinantal factor that cannot be calculated in general. We cannot therefore readily obtain results independent of specific $\underset{\sim}{L}$. It seems that more specific sets of eigenstates of $\underline{a}$ need be constructed in this case from those of $\underline{b}$. We may then be able to determine the form of $\rho(\underline{a}, \underline{a}^{\dagger})$ more generally. Otherwise more detailed information of $\psi_{op}(\bar{r}, t)$ will be required; for example, we may need its explicit expansion in terms of $\underline{b}$ and the density operator $\rho(\underline{b}, \underline{b}^{\dagger})$. Further discussion will not be made. Note that the canonical representation of Eq. 385 can always be employed.

APPENDIX H

Mathematical Definitions

We shall now define the major mathematical terms and notation used in the text. Some of their more elementary properties will also be mentioned. Luenberger[137] is probably the single reference that contains most of our definitions. For the others and for more details Akhiezer and Glazman,[135] Schatten,[136] Riesz and Sz-Nagy,[138] and Freidman[87] may be consulted.

If x is a number of the set S, we write $x \in S$. If V is a subset of S, we write $V \subset S$. If $V \subset S$ and $V \neq S$, then V is a proper subset of S. The set of real numbers will be denoted $\mathbb{R}$, and the complex numbers $\mathbb{C}$. If S is a set of real numbers bounded below, then there is a largest $y \in \mathbb{R}$ such that $x \geqslant y$ for all $x \in S$. The number y is called the greatest lower bound or infimum of S and is denoted $\inf_{x \in S} x$. The notation $\forall$ means "for all."

Let L be a linear space over $\mathbb{R}$ or $\mathbb{C}$. A set $\Omega \subset L$ is said to be convex if, for a given $x_1, x_2 \in \Omega$ all elements of the form $\alpha x_1 + (1-\alpha)x_2$ with $1 \geqslant \alpha \geqslant 0$ are in Ω. A set C in a linear space is said to be a cone if $x \in \Omega$ implies $\alpha x \in \Omega$ for all $\alpha \geqslant 0$. A convex cone is a set that is both convex and a cone. Let P be a convex cone in L. For $x, y \in L$ we write $x \geqslant y$ if $x, y \in P$. The cone defining the $\geqslant$ relation is called the positive cone in X. Let L, M be two linear spaces. Linear transformations are abbreviated here as transformations.

Let L, M be normed linear spaces. An operator A on L to M is bounded if there is a constant m such that $\|Ax\| \leqslant m\|x\|$ for all $x \in L$, where the norm is denoted as usual by $\| \ \|$. An operator is bounded if and only if it is continuous. If $M = \mathbb{C}$, then bounded operators from L to M are called <u>bounded linear functionals</u>. If $M = \mathbb{R}$, it is simply called a functional. Let L be a normed linear space, the space of all bounded linear functionals on L is called the dual space of X and is denoted L^* with elements x^*. We also use the star notation for complex conjugates of $x \in C$. No confusion is possible, however. Given a normed linear space with a positive cone $P \subset L$, one defines a natural corresponding convex cone P^* in L^* by $P^* = \{x^* \mid x^* x \geqslant 0 \ \forall \ x \in P\}$. Let $\underline{X}$ be a linear space and let Z be a linear space having cone P as the positive cone. A mapping G from X to Z is convex if the domain Ω of G is a convex set and if $G[\alpha x_1 + (1-\alpha)x_2] \leqslant \alpha G(x_1) + (1-\alpha)\, G(x_2)$ for all $x_1, x_2 \in \Omega$ and all α, $0 \leqslant \alpha \leqslant 1$ (see particularly Luenberger[137] for these definitions).

Let L be a normed linear space. It becomes a Banach space if it is complete with respect to the metric induced by the norm. A Banach space becomes a Hilbert space if an inner product $(\ , \ )$ can be defined which gives the norm. A normed linear space is separable if it contains a countable dense subset. Two vectors x_1, x_2 in a Hilbert space $\mathcal{H}$ are orthogonal if $(x_1, x_2) = 0$. Two subsets K_1, K_2 of $\mathcal{H}$ are orthogonal if x_1 and x_2 are orthogonal $\forall \ x_1 \in K_1, \ x_2 \in K_2$.

Let X be an operator defined on a dense domain $D_X \subset \mathcal{H}$, $\mathcal{H}$ a Hilbert space. Then X has an adjoint operator $X^\dagger$ with domain $D_{\underline{X}^\dagger} = \{g \mid (\underline{X}f, g) = (f, g')$ for some $g' \in \mathcal{H}$ and every $f \in D_{\underline{X}}\}$. X is called Hermitian if $X^\dagger$ is an extension operator of X and is self-adjoint if $X = X^\dagger$. A self-adjoint operator X is positive semidefinite if $(f, \underline{X}f) \geqslant 0$ and positive definite if $(f, \underline{X}f) > 0$ for all $f \in D_{\underline{X}}$. Let $\{|x_i\rangle\}$ be a complete orthonormal set of vectors in a separable Hilbert space $\mathcal{H}$. Then the trace of an Y is defined as $\sum_i (x_i, Yx_i)$ and and is denoted tr. Y. An operator X on $\mathcal{H}$ is completely continuous if it maps every bounded set into a relatively compact set on $\mathcal{H}$. All bounded operators are completely continuous on a finite dimensional Hilbert space. An operator X with tr. $\underline{X}^\dagger \underline{X} < \infty$ is of the Hilbert-Schmidt class X of the trace class if $|\text{tr. } \underline{X}| < \infty$. A Hilbert-Schmidt operator is necessarily completely continuous and a finite-trace operator is necessarily Hilbert-Schmidt. Completely continuous self-adjoint operators have spectral resolutions exactly analogous to finite dimensional Hermitian matrices. A projection operator P on is an idempotent ($P^2 = P$) self-adjoint bounded operator. Two projection operators P_1, P_2 are said to be orthogonal if $P_1 P_2 = 0$. Two projection operators are orthogonal if and only if their ranges are orthogonal (see Freidman,[87] Akhiezer and Glazman,[135] and Schatten[136] for these definitions).

APPENDIX I

Optimization Conditions and Proof of Theorem 15

We shall briefly consider some general optimization methods that we employ in establishing our optimal detector specification. The proof of Theorem 15 will also be given.

First, we state the general convex programming duality theorem which is the major tool that we use in the proof of Theorem 15. The proof of this duality theorem has been given by Luenberger.[137] Relevant definitions of the terms can be found in Appendix H.

Theorem I. 1

Let f be a convex functional defined on a convex subset Ω of a linear space $\underline{\overline{X}}$, and let G be a convex mapping of $\underline{\overline{X}}$ into a normal space Z. Suppose there exists an $x_1 \in \underline{\overline{X}}$ such that $G(x_1) < 0$ and that

$$\mu_o = \inf. \{f(x) | G(x) \leq 0, \ x \in \Omega\}$$

is finite. Then

$$\inf_{\substack{G(x)<0 \\ x \in \Omega}} f(x) = \max_{z^* \geq 0} \inf_{x \in \Omega} \{f(x)+Z^* G(x)\}$$

for $x^* \in Z^*$ and the maximum in the right is achieved by some $Z_o^* \geq 0$. If the infinum at the left is achieved by some $x_o \in \Omega$, then

$$Z_o^* G(x_o) = 0$$

and x_o minimizes $f(x) + Z_o^* G(x)$, $x \in \Omega$.

In the proof of Lemma 3 we need the following projection theorem.[137]

Theorem I. 2

Let x be a vector in a Hilbert space and K a closed convex subset of the space. Then there is a unique vector $k_o \in K$ such that

$$\|x-k_o\| \leq \|x-k\|$$

for all $k \in K$.

The following gradient operator method can also be used to obtain the necessary conditions for optimality in our situation. The essence of our method lies in the observation that a bounded linear operator defined everywhere on a separable Hilbert

space can be represented by a discrete infinite matrix.[135] Let $\mathscr{B}$ denote the Banach space over $\mathbb{C}$ of all bounded linear operators on $\mathcal{H}$. Then the operator $\underline{\overline{X}} \in \mathscr{B}$ is completely specified by the infinite matrix

$$\underline{\overline{X}} = (x_{ij})$$

$$x_{ij} = \langle i | \underline{\overline{X}} | j \rangle,$$

where $\{|i\rangle\}$ is any complete orthonormal set.

Consider a nonlinear real-valued functional $f(\underline{\overline{X}}, \underline{\overline{X}}^\dagger)$ defined on $\mathscr{B}$. We can clearly regard $f(\underline{\overline{X}}, \underline{\overline{X}}^\dagger)$ as $f\left(x_{ij}, x_{ij}^*\right)$, a real-valued function of infinitely many complex variables x_{ij}, x_{ij}^*. To facilitate treatment, we further write

$$x_{ij} = x_{ij}^r + i x_{ij}^I \tag{I. 1}$$

where x_{ij}^r and x_{ij}^I are the real and imaginary parts of x_{ij}. Thus we can consider $f(\underline{\overline{X}}, \underline{\overline{X}}^\dagger)$ as

$$f\left(x_{ij}^r, x_{ij}^I\right),$$

that is, a real-valued function of countably infinitely many real variables. It is then clear that in order for $f(\underline{\overline{X}}, \underline{\overline{X}}^\dagger)$ to achieve an extremum we must have

$$\frac{\partial f}{\partial x_{ij}^r} = 0; \qquad \frac{\partial f}{\partial x_{ij}^I} = 0, \quad \forall (i, j), \tag{I. 2}$$

under the assumption that f has continuous first partial derivatives. In these variations we have to regard the x_{ij} as completely independent, that is, we vary each x_{ij} independently.

Condition (I. 2) can be put in a much more suggestive and useful form by introducing the "gradient operators"

$$\frac{\partial f(\underline{\overline{X}}, \underline{\overline{X}}^\dagger)}{\partial \underline{\overline{X}}^r}; \quad \frac{\partial f(\underline{\overline{X}}, \underline{\overline{X}}^\dagger)}{\partial \underline{\overline{X}}^I}; \quad \frac{\partial f(\underline{\overline{X}}, \underline{\overline{X}}^\dagger)}{\partial \underline{\overline{X}}}; \quad \frac{\partial f(\underline{\overline{X}}, \underline{\overline{X}}^\dagger)}{\partial \underline{\overline{X}}^\dagger}$$

whose matrix representations are

$$\left(\frac{\partial f}{\partial \underline{\overline{X}}^r}\right)_{ij} = \frac{\partial f}{\partial x_{ij}^r}$$

$$\left(\frac{\partial f}{\partial \underline{\overline{X}}^I}\right)_{ij} = \frac{\partial f}{\partial x_{ij}^I}$$

$$\left(\frac{\partial f}{\partial \underline{\overline{X}}}\right)_{ij} = \frac{\partial f}{\partial x_{ij}^{r}} - i\,\frac{\partial f}{\partial x_{ij}^{I}}$$

$$\left(\frac{\partial f}{\partial \underline{\overline{X}}^{\dagger}}\right)_{ij} = \frac{\partial f}{\partial x_{ij}^{r}} + i\,\frac{\partial f}{\partial x_{ij}^{I}} \tag{I.3}$$

so that condition (I. 2) can be written in operator form explicitly independent of representation

$$\frac{\partial f}{\partial \underline{\overline{X}}^{r}} = \frac{\partial f}{\partial \underline{\overline{X}}^{I}} = \frac{\partial f}{\partial \underline{\overline{X}}} = \frac{\partial f}{\partial \underline{\overline{X}}^{\dagger}} = 0. \tag{I.4}$$

It can be easily seen that just setting

$$\frac{\partial f}{\partial \underline{\overline{X}}} = 0 \tag{I. 5}$$

is already equivalent to (I. 2). Note that $\partial f/\partial \underline{\overline{X}}$ is an operator in $\mathscr{B}$. In actual calculation of these first derivatives we can vary x_{ij} and x_{ij}^{*} as if they are independent real variables because from (I. 1) we consider x_{ij} as a function of both x_{ij}^{r} and x_{ij}^{I}, so that (I. 2) gives

$$\left(\frac{\partial f}{\partial \underline{\overline{X}}}\right)_{ij} = \frac{\partial f}{\partial x_{ij}}.$$

Finite dimensional gradient matrices of the kind (I. 3) have been introduced before for application in matrix differential equations.[145] Conditions of the type

$$\frac{\partial f}{\partial x_i} = 0$$

have also been used for finite dimensional vector optimization.[146] Our gradient operator or operator derivative of a functional is closely connected with the Frechet or Gateaux derivative[137, 138] in a normed linear space. The simplicity that we have achieved here is that (I. 5) is a direct condition on the elements of $\mathscr{B}$.

Care has to be exercised in evaluating the gradient operators $\partial f/\partial \underline{\overline{X}}$. They are not entirely similar to ordinary differentiation and, in fact, we do not have all of the derivative formulas for various forms of f. In actual cases f has to be written down as an explicit function of x_{ij} and the derivative with respect to x_{ij} taken in the usual manner. The resulting function is identified with the ij^{th} element of an appropriate matrix, which can then be expressed as an operator independent of representation.

In the presence of constraints

$$F^{\alpha}(\underline{\overline{X}}, \underline{\overline{X}}^{\dagger}) = 0, \qquad \alpha = 1, \ldots, N \tag{I.6}$$

for a set F^{α} of arbitrary transformations on $\mathscr{B}$, we can introduce the Lagrangian

$$L = f\left(x_{ij}^{r}, x_{ij}^{I}\right) + \sum_{a=1}^{N} \sum_{m,n} \lambda_{mn}^{a} F_{mn}^{a}\left(x_{ij}^{r}, x_{ij}^{I}\right), \tag{I.7}$$

where F_{mn}^{a} is the (m, n) element of F^{a}, and λ_{mn}^{a} is a set of scalar Lagrange multipliers. A necessary condition for $\underline{\overline{X}}_{o}$ to be a local extremum is then analogous to the usual case[146-148]

$$\left(\frac{\partial L}{\partial x_{ij}^{r}}\right)_{o} = \left(\frac{\partial L}{\partial x_{ij}^{I}}\right)_{o} = 0. \tag{I.8}$$

Introduce operators λ^{a} such that

$$(\lambda^{a})_{mn} = \lambda_{mn}^{a}.$$

Then we can write (I.7) in the operator form

$$L = f(\underline{\overline{X}}, \underline{\overline{X}}^{\dagger}) + \sum_{a} \operatorname{tr} \lambda^{a} F^{a}. \tag{I.9}$$

The Lagrange multipliers λ^{a} have to insure that

$$\operatorname{tr.} \lambda^{a} F^{a} \in \mathbb{R} \qquad \forall\, a.$$

Our condition (I.8) can now be compactly written as

$$\frac{\partial L}{\partial \underline{\overline{X}}} = 0. \tag{I.10}$$

Applying (I.10) to Problem III of Section II-A, we let

$$L = \sum_{j} \operatorname{tr.} \pi_{j}\rho_{j} - \operatorname{tr.} \lambda\left(\sum_{j} \pi_{j} - I\right) - \sum_{\langle ij \rangle} \operatorname{tr.} \pi_{j}\pi_{i}\lambda^{ij}, \tag{I.11}$$

where $\langle ij \rangle$ denotes a sum over all (i, j) for which $i \neq j$. Taking the derivative (I.10), by a straightforward evaluation, we have

$$\lambda - \rho_{j} = \sum_{i(\neq j)} \operatorname{tr.} \lambda^{ij}\pi_{i}. \tag{I.12}$$

Multiplying both sides of (I.12) by π_{j}, we obtain

$$(\lambda - \rho_{j})\pi_{j} = 0 \tag{I.13}$$

so that

$$\lambda = \sum_{j} \pi_{j}\rho_{j} = \sum_{j} \rho_{j}\pi_{j}. \tag{I.14}$$

This affords the proof of Theorem 15.

Implicit in our method are various continuity properties that guarantee existence of the relevant quantities. With the simple functionals that we have in Problem III no trouble should arise in this connection. Note that Theorem 15 can also be proved by general Lagrange multiplier theorems[137, 147, 148] with derivatives interpreted in the Frechet or Gateaux sense. Our approach here has the virtue of being more simple and direct.

Acknowledgment

It is a great pleasure to express my gratitude to Professor Robert S. Kennedy, who supervised the research reported here. Many ideas and critical discussions that I had with him were instrumental in the completion of this work. My association with Dr. Melvin Lax of Bell Telephone Laboratories, Incorporated has been a valuable adjunct to my graduate education, and also contributed to this study. Thanks are due to my readers, Professor Peter Elias and Professor Hermann A. Haus, whose helpful criticisms and acute comments significantly improved this research. I am also much indebted to Dr. Jane W. S. Liu with whom I have had numerous discussions on quantum communication.

References

1. C. E. Shannon, Bell System Tech. J. 27, 379, 623 (1948); Proc. IRE 37, 10 (1949). The first two papers are reproduced in C. E. Shannon and W. Weaver, The Mathematical Theory of Communication (University of Illinois Press, Urbana, Ill., 1949).
2. V. A. Kotelnikov, The Theory of Optimum Noise Immunity (Dover Publications, Inc., New York, 1968). (Doctoral dissertation presented in 1947 before the academic council of the Molotor Energy Institute in Moscow.)
3. N. Wiener, The Extrapolation, Interpolation, and Smoothing of Stationary Time Series with Engineering Applications (The M.I.T. Press, Cambridge, Mass., 1964).
4. R. S. Kennedy, Fading Dispersive Communication Channels (John Wiley and Sons, Inc., New York, 1969).
5. The first mathematical discussion was given by J. von Neumann, Mathematical Foundations of Quantum Mechanics (Princeton University Press, Princeton, N.J., 1955). (Translation of a German edition originally published in 1932.)
6. D. Bohm, Quantum Theory (Prentice-Hall, Inc., Englewood Cliffs, N.J., 1951).
7. W. H. Furry, in Colorado Lectures in Theoretic Physics, Vol. VIIIa (The University of Colorado Press, Boulder, Colorado, 1966).
8. J. M. Jauch, Foundations of Quantum Mechanics (Addison-Wesley Publishing Company, Inc., South Reading, Mass., 1968).
9. More recent references can be found in J. M. Jauch, E. P. Wigner, and M. M. Yanase, Nuovo cimento, Vol. XLVIII B, No. 1, p. 144, 1967.
10. J. M. Wozencraft and I. M. Jacobs, Principles of Communication Engineering (John Wiley and Sons, Inc., New York, 1965).
11. R. G. Gallager, Information Theory and Reliable Communication (John Wiley and Sons, Inc., New York, 1968).
12. H. L. Van Trees, Detection, Estimation, and Modulation Theory: I (John Wiley and Sons, Inc., New York, 1968).
13. C. W. Helstrom, Statistical Theory of Signal Detection (Pergamon Press, New York and London, 2d ed., 1968).
14. A. V. Balakrishnan, Communication Theory (McGraw-Hill Book Company, New York, 1968).
15. D. Gabor, Phil. Mag. 41, 1161 (1950).
16. H. Takahasi, Report of Professional Group of Information Theory, Society of Electrical Communication Engineers, Japan, 1953.
17. J. R. Pierce, in C. H. Townes (Ed.), Quantum Electronics (Columbia University Press, New York, 1960).
18. T. E. Stern, Trans. IRE, Vol. IT-6, p. 435, 1960.
19. T. E. Stern, 1960 IRE International Convention Record, Pt. 4, p. 182.
20. J. P. Gordon, in J. K. Singer (Ed.), Advances in Quantum Electronics (Columbia University Press, New York, 1961).
21. J. P. Gordon, Proc. IRE 50, 1898 (1962).
22. G. J. Lasher, in J. K. Singer (Ed.), Advances in Quantum Electronics (Columbia University Press, New York, 1961).
23. J. P. Gordon, in Proceedings of the Third International Quantum Electronics Conference, edited by N. Bloembergen (Columbia University Press, New York, 1963).
24. J. P. Gordon, in Quantum Electronics and Coherent Light, Proceedings of the International School of Physics, Enrico Fermi, Course XXXI (Academic Press, Inc., New York, 1964).

25. P. L. Zador, Bell Telephone Laboratories Technical Memorandum, 1965 (unpublished).

26. T. Hagfors, Technical Report 344, Lincoln Laboratory, M.I.T., Lexington, Mass., 1964.

27. D. S. Lebedev and L. B. Levitin, Soviet Phys. – Doklady 8, 377 (1963).

28. D. S. Lebedev and L. B. Levitin, Inform. Contr. 9, 1 (1966).

29. L. F. Jelsma and L. P. Bogiano, First IEEE Annual Communication Conference Record, p. 635, 1965.

30. C. Y. She, Report 64-074, Stanford Electronics Laboratory, Stanford, California, 1964.

31. C. Y. She, Trans. IEEE, Vol. IT-14, p. 32, 1968.

32. H. Takahasi, in A. V. Balakrishnan (Ed.), Advances in Communication Systems, Vol. I (Academic Press, Inc., New York, 1965.

33. C. W. Helstrom, Trans. IEEE, Vol. IT-11, p. 482, 1965.

34. J. I. Bowen, Trans. IEEE, Vol. IT-13, p. 230, 1967.

35. J. I. Bowen, Trans. IEEE, Vol. IT-14, p. 48, 1968.

36. G. Fillmore and G. Lachs, Trans. IEEE, Vol. IT-15, p. 465, 1969.

37. J. P. Gordon and W. H. Louisell, in B. Lax (Ed.), Physics of Quantum Electronics (McGraw-Hill Book Company, New York, 1965).

38. J. P. Gordon and W. H. Louisell, Bell Telephone Laboratories Technical Memorandum, 1965 (unpublished).

39. E. Arthurs and J. L. Kelly, Jr., Bell Syst. Tech. J. 44, 725 (1965).

40. C. Y. She and H. Heffner, Phys. Rev. 152, 1103 (1966).

41. C. W. Helstrom, Inform. Contr. 10, 254 (1967).

42. C. W. Helstrom, Trans. IEEE, Vol. IT-14, p. 234, 1968.

43. C. W. Helstrom, Inform. Contr. 13, 156 (1968).

44. Jane W. S. Liu, "Reliability of Quantum-Mechanical Communication Systems," Technical Report 468, Research Laboratory of Electronics, M.I.T., Cambridge, Mass., December 31, 1968.

45. Jane W. S. Liu, Trans. IEEE, Vol. IT-16, p. 319, 1970.

46. S. D. Personick, "Optical Mean-Square Estimation in Q-M Channels," Quarterly Progress Report No. 93, Research Laboratory of Electronics, M.I.T., Cambridge, Mass., April 15, 1969, pp. 159-162.

47. S. D. Personick, "Efficient Analog Communication over Quantum Channels," Technical Report 477, Research Laboratory of Electronics, M.I.T., Cambridge, Mass., May 15, 1970.

48. C. W. Helstrom, Jane W. S. Liu and J. P. Gordon, "Quantum-Mechanical Communication Theory," Proc. IEEE 58, 1578-1598 (1970).

49. S. J. Halme, "Efficient Optical Communication in a Turbulent Atmosphere," Technical Report 474, Research Laboratory of Electronics, M.I.T., Cambridge, Mass., April 1, 1970.

50. R. S. Kennedy and S. Karp (Eds.), "Optical Space Communication," NASA SP-217, NASA, Washington, D.C., 1969.

51. R. S. Kennedy, "Communication through Optical Scattering Channels: An Introduction," Proc. IEEE 58, 1651-1665 (1970) (Special Issue on Optical Communication).

52. H. P. Yuen, Quarterly Progress Report No. 96, Research Laboratory of Electronics, M.I.T., Cambridge, Mass., January 15, 1970, pp. 154-157.

53. H. P. Yuen, R. S. Kennedy, and M. Lax, Proc. IEEE 58, 1770 (1970).

54. P. A. Bello, Trans. IEEE, Vol. CS-11, p. 360, 1963.

55. T. Kailath, Trans. IEEE, Vol. IT-9, p. 233, 1963.

56. R. Bellman (Ed.), Stochastic Processes in Mathematical Physics and Engineering, Proceedings of Symposia in Applied Mathematics, Vol. 16 (American Mathematical Society, Providence, R.I., 1964).

57. W. E. Boyce, in B. H. Bharucha (Ed.), Probabilistic Methods in Applied Mathematics (Academic Press, Inc., New York, 1960).

58. R. Syski, in T. L. Saaty (Ed.), Modern Nonlinear Equations (McGraw-Hill Book Company, New York, 1967).

59. J. C. Samuels and A. C. Eringen, J. Math. Phys. 38, 83 (1959).

60. A. H. Jazwinski, Stochastic Processes and Filtering Theory (Academic Press, Inc., New York, 1970).

61. R. L. Stratonovich, Topics in the Theory of Random Noise, Vol. 1 (Gordon and Breach, Science Publishers, New York, 1963).

62. C. W. Helstrom, in A. V. Balakrishnan, Communication Theory, op. cit.

63. M. Lax, Rev. Mod. Phys. 32, 25 (1960).

64. M. Lax, Rev. Mod. Phys. 38, 359 (1966).

65. M. Lax, Rev. Mod. Phys. 38, 541 (1966).

66. M. Lax, Phys. Rev. 109, 1921 (1958).

67. M. Lax, Phys. Rev. 129, 2342 (1963).

68. M. Lax, J. Phys. Chem. Solids 25, 487 (1964).

69. M. Lax, Phys. Rev. 145, 110 (1966).

70. M. Lax, Phys. Rev. 172, 350 (1968).

71. M. Lax and H. P. Yuen, Phys. Rev. 172, 362 (1968).

72. M. Lax, in R. Kubo and H. Kamimura (Eds.), Dynamical Processes in Solid State Optics (W. A. Benjamin, Inc., New York, 1967).

73. M. Lax, in 1966 Brandeis Summer Lectures, Vol. 2 (Gordon and Breach, Science Publishers, New York, 1969).

74. W. H. Louisell, Radiation and Noise in Quantum Electronics (McGraw-Hill Book Company, New York, 1964).

75. W. Heitler, Quantum Theory of Radiation (Oxford University Press, London, 3rd ed., 1954).

76. J. J. Sakurai, Advanced Quantum Mechanics (Addison-Wesley Publishing Company, Inc., South Reading, Mass., 1967).

77. G. Wentzel, Quantum Theory of Fields (Interscience Publishers, Inc., New York, 1949).

78. R. S. Kennedy and E. V. Hoverstein, Trans. IEEE, Vol. IT-14, p. 716, 1968.

79. J. C. Molden, "Imaging of Objects Viewed through a Turbulent Atmosphere," Technical Report 469, Research Laboratory of Electronics, M.I.T., Cambridge, Mass., March 3, 1969.

80. R. L. Greenspan, "Error Bounds for Digital Communication over Spatially Modulated Channels," Technical Report 470, Research Laboratory of Electronics, M.I.T., Cambridge, Mass., May 30, 1969.

81. J. H. Shapiro, "Optimal Spatial Modulation for Reciprocal Channels," Technical Report 476, Research Laboratory of Electronics, M.I.T., Cambridge, Mass., April 30, 1970.

82. H. M. Heggestad, "Optical Communication through Multiple-Scattering Media," Technical Report 472, Research Laboratory of Electronics, M. I. T., Cambridge, Mass., November 22, 1968.

83. D. Middleton, Trans. IEEE, Vol. IT-13, p. 372, 1967.

84. D. Middleton, Trans. IEEE, Vol. IT-13, p. 393, 1967.

85. I. M. Gelfand and G. E. Shilov, Generalized Functions, Vol. 1 (Academic Press, Inc., New York, 1964).

86. I. M. Gelfand and N. Y. Vilenkin, Generalized Functions, Vol. 4 (Academic Press, Inc., New York, 1964).

87. B. Freidman, Principles and Techniques of Applied Mathematics (John Wiley and Sons, Inc., New York, 1965).

88. I. M. Gelfand and G. E. Shilov, Generalized Functions, Vol. 3 (Academic Press, Press, Inc., New York, 1964).

89. P. M. Morse and H. Feshbach, Methods of Theoretical Physics, Parts I and II (McGraw-Hill Book Company, New York, 1953).

90. This can be shown by proper generalization of the results given by B. H. Bharucha and T. T. Kadota, Trans. IEEE, Vol. IT-16, p. 139, 1970.

91. A. Blanc-Lapierre and R. Fortet, Theory of Random Functions, Vol. 1 and Vol. 2 (Gordon and Breach, Science Publishers, New York, 1967).

92. I. I. Gikhman and A. V. Skorokhod, Introduction to the Theory of Random Processes (W. B. Saunders Company, Philadelphia and London, 1967).

93. J. L. Doob, Stochastic Processes (John Wiley and Sons, Inc., New York, 1953).

94. M. Love, Probability Theory (D. Van Nostrand Company, Inc., New York, 1963).

95. L. A. Zadeh and C. A. Dosoer, Linear System Theory (McGraw-Hill Book Company, New York, 1963).

96. K. Ito, Mem. Am. Math. Soc. 4, 1 (1951).

97. W. J. Coles, J. S. I. A. M. 13, No. 3 (1965).

98. R. L. Stratonvich, Radio Engrg. Electronics 5, 1751 (1960).

99. F. C. Schweppe, Trans. IEEE, Vol. IT-11, p. 61, 1965.

100. H. L. Van Trees, "Detection and Continuous Estimation: The Fundamental Role of the Optimum Realizable Linear Filter," Paper 7/1, WESCON/66 Technical Papers, August 1966.

101. A. B. Baggeroer, "Maximum a posteriori Interval Estimation," Paper 7/3, WESCON/66 Technical Papers, August 1966.

102. D. L. Snyder, "A Theory of Continuous Nonlinear Recursive-Filtering with Application of Optimum Analog Demodulation," Paper 7/2, WESCON/66 Technical Papers, August 1966.

103. D. L. Snyder, Trans. IEEE, Vol. IT-14, p. 94, 1968.

104. H. Nyquist, Phys. Rev. 32, 110 (1928).

105. H. B. Callen and T. A. Welton, Phys. Rev. 83, 34 (1951).

106. R. Kubo, J. Phys. Soc. Japan 12, 570 (1957).

107. R. Kubo, in Rept. Progr. Phys. 29, 100 (1966).

108. R. W. Brockett, Finite Dimensional Linear Systems (John Wiley and Sons, Inc., New York, 1970).

109. H. L. Van Trees, Trans. IEEE, Vol. IT-12, p. 51, 1966.

110. G. Adomian, Rev. Mod. Phys. 35, 185 (1963).

111. P. A. M. Dirac, The Principles of Quantum Mechanics (Oxford University Press, London, 4th ed., 1958).

112. G. Rosen, Formulations of Classical and Quantum Dynamical Theory (Academic Press, Inc., New York, 1969).

113. I. E. Segal, Mathematical Problems of Relativistic Physics (American Mathematical Society, Providence, R.I., 1963).

114. G. W. Mackey, The Mathematical Foundations of Quantum Mechanics (W. A. Benjamin, Inc., New York, 1963).

115. R. Haag and D. Kastler, J. Math. Phys. 5, 848 (1964).

116. V. S. Varadarajan, Geometry of Quantum Theory (D. Van Nostrand Company, Inc., New York, 1968).

117. V. S. Varadarajan, Communs. Pure Appl. Math. 15, 189 (1962).

118. R. Kubo, J. Phys. Soc. Japan 17, 1100 (1962).

119. R. J. Glauber, Phys. Rev. 131, 2766 (1963).

120. R. J. Glauber, in C. Dewitt (Ed.), Quantum Optics and Electronics (Gordon and Breach, Science Publishers, New York, 1964).

121. J. R. Klauder and E. C. G. Sudarshan, Fundamentals of Quantum Optics (W. A. Benjamin, Inc., New York, 1968).

122. J. R. Klauder, J. Math. Phys. 4, 1055 (1963).

123. R. J. Glauber, Phys. Rev. 130, 2529 (1963).

124. R. P. Feynman, Phys. Rev. 84, 108 (1951).

125. M. Lax and W. H. Louisell, Trans. IEEE, Vol. QE-3, p. 47, 1967.

126. R. J. Glauber, Phys. Rev. Letters 10, 277 (1963).

127. E. C. G. Sudarshan, Phys. Rev. Letters 10, 84 (1963).

128. J. R. Klauder, Phys. Rev. Letters 16, 534 (1966).

129. L. Mendel and E. Wolf, Rev. Mod. Phys. 37, 231 (1965).

130. H. A. Haus, "Steady-State Quantum Analysis of Linear Systems," Proc. IEEE 58, 1599-1611 (1970).

131. L. D. Landau and E. M. Lifshitz, Statistical Physics (Addison-Wesley Publishing Company, Inc., South Reading, Mass., 1958).

132. V. I. Tatarski, Wave Propagation in a Turbulent Medium (Dover Publications, Inc., New York, 1967).

133. U. Frisch, in B. H. Bharucha (Ed.), Probabilistic Methods in Applied Mathematics (Academic Press, Inc., New York, 1960).

134. L. A. Chernov, Wave Propagation in a Random Medium, (Dover Publications, Inc., New York, 1967).

135. N. I. Akhiezer and I. M. Glazman, Theory of Linear Operators in Hilbert Space, Vols. I and II (F. Ungar Publishing Company, New York, 1961).

136. R. Schatten, Norm Ideals of Completely Continuous Operators (Springer-Verlag, Berlin, 1960).

137. D. G. Luenberger, Optimization by Vector Space Methods (John Wiley and Sons, Inc., New York, 1969).

138. F. Riesz and B. Sz-Nagy, Functional Analysis (F. Ungar Publishing Company, New York, 1955).

139. S. Sherman, Proc. International Congress of Mathematicians, 1950, Vol. 1, p. 470.

140. L. Kantorovich and G. Akilov, Functional Analysis in Normed Spaces (Pergamon Press, London and New York, 1964).

141. H. Kuhn and A. Tucker (Eds.), Linear Inequalities and Related Systems (Princeton University Press, Princeton, N. J., 1956).

142. K. Gottfried, Quantum Mechanics, Vol. I (W. A. Benjamin, Inc., New York, 1966).

143. U. Fano, Rev. Mod. Phys. 29, 74 (1957).

144. D. ter Haar, Rept. Progr. Phys. 24, 304 (1961).

145. M. Athans and F. C. Schweppe, JA-2634, Lincoln Laboratory, M. I. T., Lexington, Mass., 1965.

146. M. Hestenes, Calculus of Variations and Optimal Control Theory (John Wiley and Sons, Inc., New York, 1966).

147. L. Luisternick and V. Sobolev, Elements of Functional Analysis (F. Ungar Publishing Company, New York, 1961).

148. L. Hurwicz, in J. Arrow, et al. (Eds.), Studies in Linear and Nonlinear Programming (Stanford University Press, Stanford, Calif., 1958).

JOINT SERVICES ELECTRONICS PROGRAM
REPORTS DISTRIBUTION LIST

Department of Defense

Assistant Director (Research)
Office of Director of Defense, Research
& Engineering
The Pentagon, Rm 3C128
Washington, D.C. 20301

Technical Library
DDR&E
Room 3C-122, The Pentagon
Washington, D.C. 20301

Director For Materials Sciences
Advanced Research Projects Agency
1400 Wilson Boulevard
Arlington, Virginia 22209

Chief, R&D Division (340)
Defense Communications Agency
Washington, D.C. 20305

Defense Documentation Center
Attn: DDC-TCA
Cameron Station
Alexandria, Virginia 22314

Dr. Alvin D. Schnitzler
Institute For Defense Analyses
Science and Technology Division
400 Army-Navy Drive
Arlington, Virginia 22202

LTC Norman D. Jorstad
Weapons Systems Evaluation Group
400 Army-Navy Drive
Arlington, Virginia 22202

Central Intelligence Agency
Attn: CRS/ADD/PUBLICATIONS
Washington, D.C. 20505

Department of the Air Force

Hq USAF (AF/RDPE)
Washington, D.C. 20330

Hq USAF/RDPS
Washington, D.C. 20330

Hq USAF (RDSD)
The Pentagon
Washington, D.C. 20330

Colonel E. P. Gaines, Jr.
ESD (MCD)
L. G. Hanscom Field
Bedford, Massachusetts 01730

Dr L. A. Wood, Director
Electronic and Solid State Sciences
Air Force Office of Scientific Research
1400 Wilson Boulevard
Arlington, Virginia 22209

Dr Harvey E. Savely, Director
Life Sciences
Air Force Office of Scientific Research
1400 Wilson Boulevard
Arlington, Virginia 22209

AFSC (CCJ/Mr I. R. Mirman)
Andrews Air Force Base,
Washington, D.C. 20331

Rome Air Development Center
Attn: Documents Library (TDLD)
Griffiss Air Force Base, New York 13440

Mr H. E. Webb, Jr. (ISCP)
Rome Air Development Center
Griffiss Air Force Base, New York 13440

Dr L. M. Hollingsworth
AFCRL (CA)
L. G. Hanscom Field
Bedford, Massachusetts 01730

Hq ESD (TRI)
L. G. Hanscom Field
Bedford, Massachusetts 01730

Professor R. E. Fontana, Head
Dept of Electrical Engineering
Air Force Institute of Technology
Wright-Patterson Air Force Base,
Ohio 45433

JOINT SERVICES REPORTS DISTRIBUTION LIST (continued)

Dr H. V. Noble, AFAL/TE
Chief, Electronics Technology Division
Air Force Avionics Laboratory
Wright-Patterson Air Force Base,
Ohio 45433

Director
Air Force Avionics Laboratory
Wright-Patterson Air Force Base,
Ohio 45433

AFAL/TEA (Mr R. D. Larson)
Wright-Patterson Air Force Base,
Ohio 45433

Director of Faculty Research
Department of the Air Force
U.S. Air Force Academy
Colorado 80840

Mr Jules I. Wittebort
Chief, Electronics Branch
Manufacturing Technology Division
AFAL/LTE
Wright-Patterson Air Force Base,
Ohio 45433

Academy Library (DFSLB)
USAF Academy, Colorado 80840

Director of Aerospace Mechanics Sciences
Frank J. Seiler Research
Laboratory (OAR)
USAF Academy, Colorado 80840

Major Richard J. Gowen
Tenure Associate Professor
Dept of Electrical Engineering
USAF Academy, Colorado 80840

Director, USAF PROJECT RAND
Via: Air Force Liaison Office
The RAND Corporation
Attn: Library D
1700 Main Street
Santa Monica, California 90406

AUL3T-9663
Maxwell Air Force Base, Alabama 36112

AFETR Technical Library
(MU-135)
Patrick Air Force Base, Florida 32925

ADTC (SSLT)
Eglin Air Force Base, Florida 32542

Hq AMD (RDR/Lt Col Godden)
Brooks Air Force Base, Texas 78235

USAFSAM (RAT)
Brooks Air Force Base, Texas 78235

Commanding General
Attn: STEWS-AD-L, Technical Library
White Sands Missile Range,
New Mexico 88002

European Office of Aerospace Research
Technical Information Office
Box 14, FPO New York 09510

VELA Seismological Center
312 Montgomery Street
Alexandria, Virginia 22314

Capt C. E. Baum
AFWL (SRE)
Kirtland Air Force Base,
New Mexico 87117

Biomedical Engineering Branch (SCB)
USAF School of Aerospace Medicine (AFSC)
Department of the Air Force
Brooks Air Force Base, Texas 78235

Department of the Army

Director
Physical & Engineering Sciences Division
3045 Columbia Pike
Arlington, Virginia 22204

Commanding General
U.S. Army Security Agency
Attn: IARD-T
Arlington Hall Station
Arlington, Virginia 22212

Commanding General
U.S. Army Materiel Command
Attn: AMCRD-TP (Dr Zarwyn)
Washington, D.C. 20315

Director
U.S. Army Advanced Materiel
Concepts Agency
2461 Eisenhower Avenue
Alexandria, Virginia 22314

JOINT SERVICES REPORTS DISTRIBUTION LIST (continued)

Commanding General
USACDC Institute of Land Combat
Attn: Technical Library, Rm 636
2461 Eisenhower Avenue
Alexandria, Virginia 22314

Mr H. T. Darracott (AMXAM-FT)
U.S. Army Advanced Materiel
Concepts Agency
2461 Eisenhower Avenue
Alexandria, Virginia 22314

Dr Berthold Altmann (AMXDO-TI)
Harry Diamond Laboratories
Connecticut Avenue and
Van Ness Street N. W.
Washington, D.C. 20438

Commanding Officer (AMXRD-BAD)
U.S. Army Ballistic Research Laboratory
Aberdeen Proving Ground
Aberdeen, Maryland 21005

U.S. Army Munitions Command
Attn: Science & Technology Information
Branch, Bldg 59
Picatinny Arsenal, SMUPA-RT-S
Dover, New Jersey 07801

Dr Herman Robl
Deputy Chief Scientist
U.S. Army Research Office (Durham)
Box CM, Duke Station
Durham, North Carolina 27706

Richard O. Ulsh (CRDARD-IP)
U.S. Army Research Office (Durham)
Box CM, Duke Station
Durham, North Carolina 27706

Technical Director (SMUFA-A2000-107-1)
Frankford Arsenal
Philadelphia, Pennsylvania 19137

Redstone Scientific Information Center
Attn: Chief, Document Section
U.S. Army Missile Command
Redstone Arsenal, Alabama 35809

Commanding General
U.S. Army Missile Command
Attn: AMSMI-RR
Redstone Arsenal, Alabama 35809

Commanding General
U.S. Army Strategic Communications
Command
Attn: SCC-ATS (Mr Peter B. Pichetto)
Fort Huachuca, Arizona 85613

Dr Homer F. Priest
Chief, Materials Sciences Division,
Bldg 292
Army Materials & Mechanics Research
Center
Watertown, Massachusetts 02172

Commandant
U.S. Army Air Defense School
Attn: Missile Science Division, C&S Dept
P. O. Box 9390
Fort Bliss, Texas 79916

Commandant
U.S. Army Command and General
Staff College
Attn: Acquisitions, Lib Div
Fort Leavenworth, Kansas 66027

Dr Hans K. Ziegler
Army Member TAC/JSEP (AMSEL-XL-D)
U.S. Army Electronics Command
Fort Monmouth, New Jersey 07703

Mr I. A. Balton, AMSEL-XL-D
Executive Secretary, TAC/JSEP
U.S. Army Electronics Command
Fort Monmouth, New Jersey 07703

Director (NV-D)
Night Vision Laboratory, USAECOM
Fort Belvoir, Virginia 22060

Commanding Officer
Atmospheric Sciences Laboratory
U.S. Army Electronics Command
White Sands Missile Range,
New Mexico 88002

Atmospheric Sciences Laboratory
U.S. Army Electronics Command
Attn: AMSEL-BL-DD (Mr Marvin Diamond)
White Sands Missile Range,
New Mexico 88002

JOINT SERVICES REPORTS DISTRIBUTION LIST (continued)

Chief
Missile Electronic Warfare Tech
Area (AMSEL-WL-M)
Electronic Warfare Laboratory,
USAECOM
White Sands Missile Range,
New Mexico 88002

Project Manager NAVCON
Attn: AMCPM-NC, Bldg 439
(H. H. Bahr)
Fort Monmouth, New Jersey 07703

Mr A. D. Bedrosian, Rm 26-131
U.S. Army Scientific Liaison Office
Massachusetts Institute of Technology
77 Massachusetts Avenue
Cambridge, Massachusetts 02139

Commanding General
U.S. Army Electronics Command
Fort Monmouth, New Jersey 07703
Attn: AMSEL-RD-O (Dr W. S. McAfee)
GG-DD
XL-D
XL-DT
XL-G (Dr S. Kronenberg)
XL-H (Dr R. G. Buser)
BL-FM-P
CT-D
CT-R
CT-S
CT-L
CT-O
CT-I
CT-A
NL-D (Dr H. Bennett)
NL-A
NL-C
NL-P
NL-P-2
NL-R
NL-S
KL-D
KL-I
KL-E
KL-S
KL-SM
KL-T
VL-D
VL-F
WL-D

Department of the Navy

Director, Electronics Programs
Attn: Code 427
Office of Naval Research
800 North Quincy Street
Arlington, Virginia 22217

Mr Gordon D. Goldstein, Code 437
Information Systems Program
Office of Naval Research
800 North Quincy Street
Arlington, Virginia 22217

Commander
Naval Security Group Command
Naval Security Group Headquarters
Attn: Technical Library (G43)
3801 Nebraska Avenue, N. W.
Washington, D.C. 20390

Director
Naval Research Laboratory
Washington, D.C. 20390
Attn: Code 5200
Mr A. Brodzinsky, Supt,
Electronics Div

Director
Naval Research Laboratory
Attn: Dr H. Rabin, Code 7000
Washington, D.C. 20390

Code 8050
Maury Center Library
Naval Research Laboratory
Washington, D.C. 20390

Dr G. M. R. Winkler
Director, Time Service Division
U.S. Naval Observatory
Washington, D.C. 20390

Naval Air Systems Command
AIR 310 - Research Administrator
Room 424 JP-1
Washington, D.C. 20360

Dr A. L. Slafkosky
Scientific Advisor
Commandant of the Marine Corps (Code AX)
Washington, D.C. 20380

Naval Ship Systems Command
Ship 035
Washington, D.C. 20360

U.S. Naval Weapons Laboratory
Dahlgren, Virginia 22448

JOINT SERVICES REPORTS DISTRIBUTION LIST (continued)

Naval Electronic Systems Command
Attn: Code 0311, Rm 7W12, NC #1
Department of the Navy
Washington, D.C. 20360

Commander
U.S. Naval Ordnance Laboratory
Attn: Librarian
White Oak, Maryland 20910

Director
Office of Naval Research
Boston Branch
495 Summer Street
Boston, Massachusetts 02210

Commander (ADL)
Naval Air Development Center
Attn: NADC Library
Johnsville, Warminster,
Pennsylvania,18974

Commanding Officer
Naval Missile Center
Attn: 5632.2, Technical Library
Point Mugu, California 93042

W. A. Eberspacher, Associate Head
Systems Integration Division, Code 5340A
U.S. Naval Missile Center
Point Mugu, California 93041

Commander
Naval Electronics Laboratory Center
Attn: Library
San Diego, California 92152

Deputy Director and Chief Scientist
Office of Naval Research Branch Office
1031 East Green Street
Pasadena, California 91101

Library (Code 2124)
Naval Postgraduate School
Monterey, California93940

Officer in Charge, New London Lab.
Naval Underwater Systems Center
Attn: Technical Library
New London, Connecticut 06320

Commanding Officer
Naval Avionics Facility
Attn: D/035 Technical Library
Indianapolis, Indiana 46241

Director
Naval Research Laboratory
Attn: Library, Code 2629 (ONRL)
Washington, D.C. 20390

Commanding Officer
Naval Training Device Center
Attn: Technical Library
Orlando, Florida 32813

U.S. Naval Oceanographic Office
Attn: M. Rogofsky, Librarian (Code 1640)
Washington, D.C. 20390

Other Government Agencies

Dr H. Harrison
AEC/NASA Space Nuclear Systems Office
AEC Headquarters (F-309)
Washington, D.C. 20545

NASA Lewis Research Center
Attn: Library
21000 Brookpark Road
Cleveland, Ohio 44135

Los Alamos Scientific Laboratory
Attn: Reports Library
P. O. Box 1663
Los Alamos, New Mexico 87544

Mr M. Zane Thornton
Deputy Director
Center for Computer Sciences and Technology
National Bureau of Standards
U.S. Department of Commerce
Washington D.C. 20234

U.S. Postal Service
Library – Room 6012
12th & Pennsylvania Ave., N. W.
Washington, D.C. 20260

JOINT SERVICES REPORTS DISTRIBUTION LIST (continued)

Non-Government Agencies

Director
Research Laboratory of Electronics
Massachusetts Institute of Technology
Cambridge, Massachusetts 02139

Mr Jerome Fox, Research Coordinator
Polytechnic Institute of Brooklyn
333 Jay Street
Brooklyn, New York 11201

Director
Columbia Radiation Laboratory
Columbia University
538 West 120th Street
New York, New York 10027

Director
Coordinate Science Laboratory
University of Illinois
Urbana, Illinois 61801

Director
Stanford Electronics Laboratory
Stanford University
Stanford, California 94305

Director
Microwave Laboratory
Stanford University
Stanford, California 94305

Director
Electronics Research Laboratory
University of California
Berkeley, California 94720

Director
Electronics Sciences Laboratory
University of Southern California
Los Angeles, California 90007

Director
Electronics Research Center
The University of Texas at Austin
Engineering-Science Bldg 110
Austin, Texas 78712

Division of Engineering and
Applied Physics
210 Pierce Hall
Harvard University
Cambridge, Massachusetts 02138

Dr G. J. Murphy
The Technological Institute
Northwestern University
Evanston, Illinois 60201

Dr John C. Hancock, Head
School of Electrical Engineering
Purdue University
Lafayette, Indiana 47907

Dept of Electrical Engineering
Texas Technological University
Lubbock, Texas 79409

Aerospace Corporation
P. O. Box 95085
Attn: Library Acquisitions Group
Los Angeles, California 90045

Airborne Instruments Laboratory
Deerpark, New York 11729

The University of Arizona
Department of Electrical Engineering
Tucson, Arizona 85721

Chairman, Electrical Engineering
Arizona State University
Tempe, Arizona 85281

Engineering and Mathematical
Sciences Library
University of California at Los Angeles
405 Hilgred Avenue
Los Angeles, California 90024

Sciences-Engineering Library
University of California
Santa Barbara, California 93106

Professor Nicholas George
California Institute of Technology
Pasadena, California 91109

Aeronautics Library
Graduate Aeronautical Laboratories
California Institute of Technology
1201 E. California Boulevard
Pasadena, California 91109

Hunt Library
Carnegie-Mellon University
Schenley Park
Pittsburgh, Pennsylvania 15213

JOINT SERVICES REPORTS DISTRIBUTION LIST (continued)

Dr A. G. Jordan
Head of Dept of Electrical Engineering
Carnegie-Mellon University
Pittsburg, Pennsylvania 15213

Case Western Reserve University
Engineering Division
University Circle
Cleveland, Ohio 44106

Hollander Associates
Attn: Librarian
P. O. Box 2276
Fullerton, California 92633

Walter H. Veazie, Head
Electronic Properties Information Center
Mail Station E-148
Hughes Aircraft Company
Culver City, California 90230

Illinois Institute of Technology
Department of Electrical Engineering
Chicago, Illinois 60616

Government Documents Department
University of Iowa Libraries
Iowa City, Iowa 52240

The Johns Hopkins University
Applied Physics Laboratory
Attn: Document Librarian
8621 Georgia Avenue
Silver Spring, Maryland 20910

Lehigh University
Department of Electrical Engineering
Bethlehem, Pennsylvania 18015

Mr E. K. Peterson
Lenkurt Electric Co. Inc.
1105 Country Road
San Carlos, California 94070

MIT Lincoln Laboratory
Attn: Library A-082
P. O. Box 73
Lexington, Massachusetts 02173

Miss R. Joyce Harman
Project MAC, Room 810
545 Main Street
Cambridge, Massachusetts 02139

Professor R. H. Rediker
Electrical Engineering, Professor
Massachusetts Institute of Technology
Building 13-3050
Cambridge, Massachusetts 02139

Professor Joseph E. Rowe
Chairman, Dept of Electrical Engineering
The University of Michigan
Ann Arbor, Michigan 48104

New York University
Engineering Library
Bronx, New York 10453

Professor James A. Cadzow
Department of Electrical Engineering
State University of New York at Buffalo
Buffalo, New York 14214

Department of Electrical Engineering
Clippinger Laboratory
Ohio University
Athens, Ohio 45701

Raytheon Company
Research Division Library
28 Seyon Street
Waltham, Massachusetts 02154

Rice University
Department of Electrical Engineering
Houston, Texas 77001

Dr Leo Young, Program Manager
Stanford Research Institute
Menlo Park, California 94025

GTE Waltham Research Lab Library
Attn: Documents Librarian
Esther McLaughlin
40 Sylvan Road
Waltham, Massachusetts 02154

Dr W. R. LePage, Chairman
Department of Electrical Engineering
Syracuse University
Syracuse, New York 13210

Dr F. R. Charvat
Union Carbide Corporation
Materials Systems Division
Crystal Products Department
8888 Balboa Avenue
P. O. Box 23017
San Diego, California 92123

JOINT SERVICES REPORTS DISTRIBUTION LIST (continued)

Utah State University
Department of Electrical Engineering
Logan, Utah 84321

Research Laboratories for the
Engineering Sciences
School of Engineering and Applied Science
University of Virginia
Charlottesville, Virginia 22903

Yale University
Engineering and Applied Science Library
15 Prospect Street
New Haven, Connecticut 06520

UNCLASSIFIED

Security Classification

DOCUMENT CONTROL DATA - R & D

(Security classification of title, body of abstract and indexing annotation must be entered when the overall report is classified)

1. ORIGINATING ACTIVITY *(Corporate author)* Research Laboratory of Electronics Massachusetts Institute of Technology Cambridge, Massachusetts 02139	2a. REPORT SECURITY CLASSIFICATION Unclassified 2b. GROUP None

3. REPORT TITLE

Communication Theory of Quantum Systems

4. DESCRIPTIVE NOTES *(Type of report and inclusive dates)*

Technical Report

5. AUTHOR(S) *(First name, middle initial, last name)*

Horace P. H. Yuen

6. REPORT DATE August 30, 1971	7a. TOTAL NO. OF PAGES 189	7b. NO. OF REFS 148

8a. CONTRACT OR GRANT NO. DA 28-043-AMC-02536(E) b. PROJECT NO. 20061102B31F NASA Grant NGL 22-009-013	9a. ORIGINATOR'S REPORT NUMBER(S) Technical Report 482 9b. OTHER REPORT NO(S) *(Any other numbers that may be assigned this report)* None

10. DISTRIBUTION STATEMENT

This document has been approved for public release and sale; its distribution is unlimited.

11. SUPPLEMENTARY NOTES	12. SPONSORING MILITARY ACTIVITY Joint Services Electronics Program Through U. S. Army Electronics Command

13. ABSTRACT

The primary concern in this research is with communication theory problems incorporating quantum effects for optical-frequency applications. Under suitable conditions, a unique quantum channel model corresponding to a given classical space-time varying linear random channel is established. A procedure is described by which a proper density operator representation applicable to any receiver configuration can be constructed directly from the channel output field. Some examples illustrating the application of our methods to the development of optical quantum channel representations are given.

Optimizations of communication system performance under different criteria are considered. In particular, certain necessary and sufficient conditions on the optimal detector in M-ary quantum signal detection are derived. Some examples are presented. Parameter estimation and channel capacity are discussed briefly.

DD FORM 1 NOV 65 1473 (PAGE 1)

S/N 0102-014-6600

UNCLASSIFIED

Security Classification

14. KEY WORDS	LINK A ROLE	LINK A WT	LINK B ROLE	LINK B WT	LINK C ROLE	LINK C WT
Communication theory						
Optical communication						
Quantum channels						
Quantum communication systems						
Quantum detection and estimation						
Quantum noise						