N72-17844
ATS-17374

NASA TECHNICAL MEMORANDUM

NASA TM X-68010

NASA TM X-68010

CASE FILE COPY

STATUS REPORT ON THE NASA-EPA AUTOMOTIVE THERMAL REACTOR TECHNOLOGY PROGRAM

by Charles P. Blankenship and Robert R. Hibbard
Lewis Research Center
Cleveland, Ohio
January 1972

MAR 1972
RECEIVED
NASA STI FACILITY
INPUT BRANCH

TABLE OF CONTENTS

	Page
SUMMARY	1
INTRODUCTION	3
THERMAL REACTOR STATE-OF-ART	6
MATERIALS TECHNOLOGY PROGRAM	8
Overview	8
Evaluation of Alloys & Coatings	10
Development of a Ceramic Thermal Reactor	15
Future Plans	18
RESEARCH IN REACTOR KINETICS	19
Overview	19
Combustion Kinetics Studies	19
Fluid Mechanics Studies	22
Reactor Design Studies	23
Future Plans	27
CONCLUDING REMARKS	27
REFERENCES	28

E-6787

STATUS REPORT ON THE NASA-EPA AUTOMOTIVE THERMAL REACTOR TECHNOLOGY PROGRAM

By Charles P. Blankenship and Robert R. Hibbard

ABSTRACT

This report summarizes the current status of the NASA-EPA automotive thermal reactor technology program. This program is concerned primarily with materials evaluation, reactor design, and combustion kinetics. From engine-dynamometer tests of candidate metals and coatings, two ferritic iron alloys (GE 1541 and Armco 18-SR) and a nickel-base alloy (Inconel 601) offer promise for reactor use. None of the coatings evaluated warrant further consideration. Development studies on a ceramic thermal reactor appear promising based on initial vehicle road tests. A chemical kinetic-study has shown that gas temperatures of at least 900° to 1000° K (1150° to 1350°F) are required for the effective clean-up of carbon-monoxide and hydrocarbons, but that higher temperatures require shorter combustion times and thus may permit smaller reactors.

SUMMARY

An automotive thermal reactor technology program is being conducted by the NASA-Lewis Research Center in cooperation with the Office of Air Programs of the Environmental Protection Agency. This program is

directed toward contributing to reactor technology primarily in the areas of materials, reactor design, and reactor kinetics. The materials technology program includes evaluation of commercial and experimental alloys, metallic and ceramic coatings, and the development of a ceramic thermal reactor. Reactor design studies are directed toward development of improved operating performance in this type of pollution-control system. Reactor kinetics research includes consideration of gas reaction rates as related to gas mixing, combustion temperatures, and reactor residence time.

Engine-dynamometer tests of full-size reactors fabricated from seven different uncoated alloys and from a stainless steel with six different oxidation-resistant coatings have been completed to date. Peak reactor temperatures in the cyclic engine tests were about 1300°K (1900°F). Of the seven uncoated alloys evaluated, two ferritic iron alloys, GE 1541 and Armco 18-SR, and the nickel-base alloy Inconel 601 have shown the most promise for reactor use. However, the results of tests on coated metallic reactors indicate that none of the six coatings evaluated appear to be satisfactory for reactor use. They included aluminum, chromium-aluminum, nickel-chromium, and glass coatings on a stainless steel (AISI 651) substrate.

For ceramic thermal reactors, most of the effort is directed toward development of design concepts that have potential for supporting ceramic reactor components to prevent failure from mechanical shock (road and engine vibration). A metallic corrugation support system is

the most promising design currently being evaluated. Thermal-shock-resistant ceramics that are being evaluated for reactor use include several types of glass-ceramics, silicon carbide, and silicon nitride. All of these offer high potential for reactor use. Engine-dynamometer tests of the ceramic reactors have just started. But over 5000 miles of vehicle road tests have been completed on a silicon carbide reactor. The reactor has performed satisfactorily in the road tests and shows no sign of deterioration or impending failure.

Although most test reactors operate with gas temperature from about 1150° to 1300°K (1600° to 1900°F), kinetic analysis of the combustion requirements in a thermal reactor has shown that minimum gas temperatures of only about 900° to 1100° K (1150° to 1350°F) are needed for reasonably rapid oxidation of carbon monoxide. This analysis probably applies also to the oxidation of hydrocarbons. The oxidation reactions become very rapid once the minimum temperatures are exceeded indicating that reactors lower in volume than most of those presently being evaluated may be effective providing adequate gas mixing can be achieved. Therefore, additional experimental and analytical analyses of reactor-mixing processes are being conducted.

INTRODUCTION

The emissions of carbon monoxide (CO) and hydrocarbons (HC) from 1971 model year automobiles is less than 15% of that of the average uncontrolled automobile of the early sixties. This greater than 85% reduction has been accomplished by returning crankcase blow-by to the

engine, leaning out the carburetor, retarding the spark, and modest changes in combustion chamber geometry. This has been accompanied by some loss in performance and fuel economy, the latter due to retarded timing under the light-load conditions where most mileage is accumulated.

While the current emission requirements have been met by modifying the basic spark ignition engine, it appears that the automobile industry has gone about as far as it can in this direction. Therefore, the next round of reducing automobile emissions scheduled for the 1973 model year will probably require some kind of exhaust gas treatment. The much more stringent requirements for 1975-1976 (ref. 1) will certainly require such treatment unless the spark ignition engine is replaced by some other power cycle; but the latter is very unlikely in the near term. This exhaust gas treatment can be, as a minimum, just the addition of secondary air downstream of the exhaust valve, and this may allow many models to meet the 1973 requirements. But the 1975-1976 specifications will almost certainly require more complicated forms of exhaust gas treatment. The most promising systems for this purpose are thermal reactors (sometimes called exhaust manifold reactors) and catalytic converters. Either of these systems (or combinations of both) will have to be installed on the exhaust systems of conventional engines to further reduce emissions beyond that possible by engine modifications alone. Both of these systems are being worked on in the automobile and petroleum industries, with major emphasis apparently on catalytic converters.

In 1969 the National Air Pollution Control Administration (NAPCA--then a department of Health, Education, and Welfare) suggested that they and the NASA-Lewis Research Center enter into a cooperative program for federal government sponsorship of research on thermal reactors to help foster their development. This resulted in an agreement between the two Administrations whereby NAPCA was to make funds available to NASA to support contractual research on materials problems and the NASA-Lewis Research Center was to contribute an in-house effort directed towards materials evaluation, reactor design, and supporting research in chemical kinetics and flow dynamics. Subsequently, through reorganization and reassignment, the interested segment of NAPCA became the Office of Air Programs of the Environmental Protection Agency (EPA), and the latter maintains an active interest but no longer financially supports this work.

It must be emphasized that this NASA-EPA program is a technology program aimed only at contributing data and concepts which may be useful to the designers of emission control systems. The program does not have the goal of developing and demonstrating a marketable low emission vehicle. There are the many aspects of mass producibility, cost, customer acceptance, styling restraints, maintenance, etc. that can only be evaluated and developed by the automotive industry.

Reported herein is the progress to date on the NASA-EPA thermal reactor technology program. This report summarizes results from work done both under NASA contracts and that from the NASA-Lewis Research Center in-house effort. It includes highlights of work already published

as NASA reports and some preliminary results from work still in progress; the latter will be more fully covered in NASA reports at a later date. Our thermal reactor work is divided into two major areas: (1) materials technology, and (2) reactor kinetics research, with principle effort in the materials technology area. The following sections of this report are organized around these two areas with a brief discussion of the thermal reactor state-of-art.

THERMAL REACTOR STATE-OF-ART

A sketch of a typical thermal reactor installation is shown in Figure 1. It consists of an oversized exhaust manifold having an internal volume about equal to the displacement volume of the engine bank it serves. In it, exhaust gas and secondary air are mixed and the HC and CO are oxidized, at least in part, to carbon dioxide (CO_2) and water (H_2O). The thermal reactor is most often used with an engine that is run somewhat richer than stoichiometric so that additional air is required to allow the further conversion of HC and CO to H_2O and CO_2. The reaction takes place in the gas phase and not on catalytic surfaces; therefore, the thermal reactor may tolerate the lead from leaded fuels that would poison catalytic systems. However, the lead may adversely affect thermal reactor materials and so shorten system life.

There has been considerable industrial effort on the thermal or exhaust manifold reactor (e.g. refs. 2-7) dating back to at least 1962 (ref. 2). Reported results (ref. 8) indicate that at least one reactor

concept, when combined with engine modifications, can meet the 1975 federal standards (ref. 1) for both HC and CO emissions. And, when exhaust gas recirculation is added to the engine, the tentative 1976 federal standards for nitrogen oxides (NO_X) can also be met (ref. 8). This reduction in NO_X is accomplished in large part by using richer than normal carburetion in the engine since far less NO_X is formed in the combustion of rich mixtures than with near-stoichiometric or lean mixtures. However, there is a loss in fuel economy approaching 20% (ref. 8) associated with the rich engine operation. The thermal reactor is also reported to be very effective in reducing the emissions from the rotary (Wankel) engine (ref. 9).

Because engines with thermal reactor emission control are usually run rich and secondary air must be added, the reactor must serve two functions. It must act as a mixer to blend this secondary air with the exhaust gas and it must supply sufficient residence time for the oxidation reactions to go to near completion. The efficiency of the former process depends on the geometry of the system, and the latter depends on the temperature and volume of the reactor. There has been considerable effort to develop geometries that yield effective mixing and insulating systems to keep the temperature high. A minimum temperature of at least 800° K (980°F) has been found necessary for emission control, and temperatures of at least 1350°K (1975°F) can be reached under some operating conditions (ref. 3). Peak temperatures of approximately 1650°K (2500°F) can result in a malfunctioning engine from the combustion of the charge from a misfiring cylinder (ref. 3).

Overall, the thermal reactor system does hold the promise of allowing the spark ignition engine to meet the very stringent emission limits proposed for the 1975-1976 model year cars. However, the high operating temperatures present very serious problems as to reactor durability and life, especially under agressive driving conditions or with a misfiring engine. The superalloys developed for high temperature use in jet engines might give adequate life, but these are costly and contain high percentages of nickel, a strategic element. The use of lower cost and more available materials is certainly desired for these reactors. There is also a desire for smaller reactors since they now present serious under-hood congestion problems when installed in V-8 engines. These problems are addressed in the NASA-EPA program.

MATERIALS TECHNOLOGY PROGRAM

Overview

The materials technology program includes evaluation of commerical and experimental alloys, metallic and ceramic coatings, and the development of design concepts for reactors utilizing ceramic components. This work is directed toward finding materials that will endure the most severe of reactor operating conditions. Thus test conditions differ considerably from those usually used in evaluating the pollution-control performance of reactors.

In conducting this program, primary attention is being given to the most important factors that affect materials selection for this application, as listed in Table 1. As shown, reactor temperatures

under normal driving conditions range from about 1150° to 1300°K (1600° to 1900°F). But temperatures can exceed about 1525°K (2300°F) under extreme conditions such as spark-out. With a desired reactor life of 50,000 to 100,000 miles (2000 to 4000 hours) at these high operating temperatures, material properties such as creep resistance and resistance to thermal fatigue due to the cyclic mode of operation are of prime concern. Also, reactor materials must have resistance to high temperature oxidation, to erosion, and to chemical attack from fuel constituents. Superimposed on these metallurgical and mechanical considerations are the requirements for low-cost materials that are relatively easy to fabricate and assemble into reactor components. Finding a material that meets all of these requirements is difficult; probably none of the materials available at the present time meet all of them. Thus, trade-offs in material performance and cost may be necessary to meet the requirements of this application.

Our approach to this materials problem includes: the evaluation of inexpensive, oxidation-resistant Fe-Cr-Al alloys; the application of protective coatings to conventional stainless steels; evaluation of nickel-base superalloys; and the development of reactor designs that would permit the use of the oxidation and thermal-shock-resistant ceramics that are subject to failure by mechanical shock (engine and road vibration).

Recent progress made in this technology program and future plans are summarized in the following sections.

Evaluation of Alloys and Coatings

Typical alloys and coatings selected for evaluation and their nominal composition are listed in Table 2. They include austenitic stainless steels (AISI 310 and 651), ferritic-iron alloys (GE 1541 and Armco 18-SR), and nickel-base superalloys (Hastelloy X, Inconel 601, and Nimonic 75). The performance of commercial coatings was evaluated using primarily AISI 651 (19-9DL) as the substrate. The coatings listed in Table 2 are representative of the coatings that are used to protect superalloy components used in the hotter sections of aircraft jet engines. These materials were evaluated on engine-dynamometer test stands using coupon samples as well as full-size reactors, as described below.

Except where noted, all of the engine tests were conducted using regular-grade leaded gasoline. Peak metal test temperatures were limited to about 1300°K (1900°F). This was considered to be the maximum use temperature for the metallic materials included in the evaluation.

Coupon Screening Tests. - A broad range of materials within the general class listed in Table 2 were exposed as coupon samples in a thermal reactor mounted on a test engine (NASA-Lewis engine test facility described in refs. 10 and 11). Similar-type material evaluation tests have been conducted by others (refs. 4 and 5). The test coupons, approximately 5 x 2 x 0.15-cm (2 x 1 x 0.060-inch), were mounted on a rack directly under the exhaust ports and exposed to cyclic engine operation. Engine operation was adjusted to provide a

10-minute exposure at about 1300°K (1900°F) followed by a 10-minute deceleration and idle to a temperature of about 475°K (400°F). Most of the materials were exposed to about 150 cycles. On the basis of resistance to oxidation and distortion, materials such as Fe-Cr-Al alloys, Inconel 601, and the Ni-Cr and Ni-Cr-Al coatings on AISI 651 gave excellent performance. Thus, they were included in the following tests of full-size reactors. The detailed results of the coupon screening tests are given in reference 11.

Full-size reactor screening tests. - All of the alloys and coatings listed in Table 2 were subjected to full-size reactor screening tests. Reactors fabricated from these materials were of similar design to the Dupont Type II circumferential flow reactor (ref. 4). This design is shown schematically in figure 2. Most of the materials were about 0.15 cm (0.06-inch) thick. The reactor cores (inner liners) were about 6.2 cm (2.5-inch) in diameter and about 45 cm (18-inch) long. Coatings included in the evaluation were applied to the reactors by commercial vendors. Coating depositions were about 20 mg/cm^2.

The screening tests were conducted by Teledyne-Continental Motors Inc. under NASA contract using V-8 engines on engine-dynamometer test stands (described in ref. 12). Engine operation was adjusted to provide a peak reactor metal temperature of about 1300°K (1900°F). The screening tests were conducted in a cyclic mode for 200 hours of engine operation. Each cycle consisted of 2-hour exposure at peak temperature followed by a cool-down to less than 425°K (300°F) in about 20-minutes. Each reactor was exposed to a total of 83 cycles.

Material performance in the screening tests was based on the resistance to oxidation, erosion, and distortion of the reactor core. Those materials that gave the best performance (with less than 5 percent weight loss due to oxidation and erosion and less than 5 percent distortion) were:

Alloys (uncoated)	Coatings on AISI 651
GE 1541	Ni-Cr (Wall Colmonoy NC-9)
AISI 310	Glass (NBS-A-418A)
	Cr-Al (Alloy Surfaces HI-15)

These materials were selected for further evaluation in a long-term endurance test described in the next section.

The components of the GE 1541 reactor after the 200-hour endurance test are shown in figure 3. They are in excellent condition and represent the overall reactor configuration used in the tests of full-size reactors.

Endurance testing of full-size reactors. - Materials selected for endurance testing were as follows:

Alloys (uncoated)	Coatings (AISI 651 substrate)
GE 1541	Ni-Cr
Armco 18-SR	NBS Glass
Inconel 601	Cr-Al
AISI 310	

The ferritic-iron alloy Armco 18-SR and Inconel 601 were included in the endurance test as additional metallic candidates. Armco 18-SR was equivalent to the GE 1541 alloy in terms of oxidation resistance

in the screening test, but the reactor core exhibited about 10 percent diametral distortion. Since the distortion might be corrected by design modifications and since it is a relatively inexpensive alloy, we concluded that further evaluation of the Armco 18-SR was warranted. Inconel 601 was included since it is less costly than the other nickel-base superalloys evaluated and since it performed better than alloys such as Hastelloy-X in coupon screening tests. In the 200-hour screening tests, the 0.15 cm (0.06 in) thick liner of the Hastelloy-X reactor was burned through. Additional details of the full-size reactor screening tests are given in reference 12.

The endurance test cycle is shown schematically in the top of figure 4. This test cycle is intended to simulate actual driving conditions. Part A simulates driving to work at 35 mph (1100°K, 1550°F reactor temperature) with several stops and starts and a 10-minute drive on a freeway at 70 mph (1300°K, 1900°F reactor temperature). Weekend shopping is simulated in Part B, and Part C simulates a weekend trip consisting mostly of freeway driving at 70 mph. The total cycle consists of about 32-hours of engine operation with a reactor temperature of 1300°K (1900°F) about 45 percent of the time. The cycle is repeated continuously in the endurance test. These tests were conducted in the same contractor-operated facilities used in the 200-hour screening tests.

The results obtained in the endurance tests are shown at the bottom of figure 4. As shown, the GE 1541 and Inconel 601 reactors exhibited excellent resistance to oxidation through 650 hours of

testing. They might meet our goal of less than 5 percent weight loss in 1000 hours; at least, they should be within the usable range noted. They represent the best materials that we have evaluated to date. However, the GE 1541 reactor was prone to oxidation attack at the welds and failed along portions of the weld seam. This appears to be related to the welding procedure that was used. Probably excessive Cr and Al was lost during welding. The cause for the weld failure is being evaluated. But we feel that this material offers excellent potential for reactor use and that improved welding procedures can be developed to eliminate the excessive oxidation of weldments encountered in the endurance test. Inconel 601 gave excellent performance, but it is probably too expensive and contains more nickel than is desirable for reactor use. The Armco 18 SR reactor has performed well after about 260 hours of endurance testing. Although this reactor material distorted excessively in the 200-hour screening test, only minimal distortion has been noted in the endurance test even though no change in design or material thickness was made. Also, the oxidation resistance of the Armco 18 SR was similar to that of the GE 1541 alloy in the screening test. Thus, we believe that this alloy has potential for reactor use. The AISI 310 reactor failed by oxidation. About one-third of the core was thinned and contained holes.

The results of the endurance tests on coated reactors indicate that none of the commercial coatings are suitable for reactor use

at the 1300°K (1900°F) peak temperature. Even at a peak cycle temperature of 1250°K (1800°F) using unleaded fuel, one of the glass-coated reactors and the Sermetel J coated reactor failed in about 200 hours of testing. All of the coated reactor cores were burned-through during the test.

The endurance test cycle simulates extremely severe engine operation. Engine life is only about 900 to 1000 hours in the endurance test. Thus, the reactor life of 600 hours obtained in this test could represent at least 60 percent of the life of an engine and perhaps that of a vehicle.

Development of a Ceramic Thermal Reactor

Ceramics offer excellent potential for reactor use with their inherent good oxidation resistance and relatively low cost. In addition, they can be used to higher temperatures than metallics because the ceramics maintain usable strength to much higher temperatures. However, brittleness is of primary concern when considering their use in this application. Reactor designs capable of supporting the ceramic components and preventing their failure from mechanical shock are required. So most of our effort in ceramics is focussed on development of reactor designs to adequately support these relatively brittle materials. Candidate ceramics and reactor designs that we are evaluating are described in the following sections.

Candidate ceramics. - Ceramics that are potential candidates for reactor use include glass-ceramics, silicon carbide, and silicon nitride. Glass-ceramics have excellent resistance to thermal shock because of their nil thermal expansion. Their maximum use-temperature is estimated to be about 1475°K (2200°F). Silicon nitride and silicon carbide have relatively high thermal conductivity for ceramics providing these materials with good thermal shock resistance. Maximum use-temperature for these materials in a thermal reactor is estimated to be greater than 1600°K (2400°F).

Reactor designs. - One design concept for supporting ceramic components in a thermal reactor is illustrated in figure 5. Reactor design and operation are similar to those with the metallic reactors. The ceramic components are supported by thin-guage metal corrugations that act like springs to hold the ceramic components in place and absorb mechanical shock. This is one of the design concepts that we are evaluating at the present time. Typical ceramic components for this reactor made from a glass-ceramic are shown in figure 6. Ceramic components are typically 0.25 cm (0.12-inch) thick. Similar components have also been made with silicon carbide. The corrugation support (shown in figure 7 on the ceramic core) is segmented with the corrugations spot-welded to a face sheet. Corrugation materials are typically 0.01 cm (0.005-inch) thick. Both stainless steels and nickel-base alloy

corrugations are being used in these experimental reactors. These materials are needed to withstand the high temperature near the ceramic core wall. Final assembly of the ceramic reactor in a metal housing is shown in figure 8. This reactor was made with the removable end piece to allow periodic inspection during testing.

Another ceramic reactor design concept is illustrated in figure 9. This ceramic-honeycomb-type reactor is being developed by Owens-Illinois, Inc. under a NASA contract. It utilizes their proprietary glass-ceramic (termed "Cer-vit"). This reactor concept illustrates the complex geometries that can be made using glass-forming technology. The honeycomb is about 0.15 cm (0.06-inch) across the webs, and the web thickness is about 0.02 cm (0.01-inch). As shown, the exhaust gas enters the central chamber and then passes through the open honeycomb matrix core. The closed honeycomb matrix provides for thermal insulation and additional support of the monolithic structure. A metal corrugation is used to support the ceramic reactor. Designs similar to the concentric-cylinder metallic reactors (shown in figure 5) but using the closed honeycomb for support and insulation also are included in the ceramic reactor development program at Owens-Illinois. Vibration tests on reactors of both of these configurations have demonstrated the feasibility of both support concepts.

Evaluation. - Evaluation of the ceramic reactors includes cyclic endurance testing in engine dynamometer test facilities (similar to that used for the metallic reactors) and also vehicle road tests. Endurance testing on engine-dynamometer test stands has just started for the various types of ceramic reactors. So no significant results are available yet. But over 5000 miles of vehicle road tests have been completed on a silicon carbide reactor similar to the reactor shown in figure 8. From the materials standpoint, this reactor has performed satisfactorily in the road tests and shows no sign of deterioration or impending failure.

Future Plans

For metallic reactors further evaluation and endurance testing of the ferritic iron alloys, GE 1541 and Armco 18-SR, are planned. Also, modifications of these alloys are planned. One of these includes the addition of tantalum ($\sim$0.5 to 1.5 percent) to improve strength, weld ductility, and ductility after exposure. Development of improved welding procedures is included in the continued studies.

Engine endurance testing of the various ceramic reactors and vehicle road tests will be continued. Our goal is to achieve at least 600 hours in engine endurance tests (using the test cycle shown in figure 4) and to accumulate as much vehicle road testing

as practical to demonstrate the durability of ceramic components in these reactor designs. Other designs are being considered and modifications of those now being evaluated probably will be required. In particular, flame holders or other modifications may be required to provide faster heat-up of the ceramics in order to effectively control emissions under cold-starting conditions.

RESEARCH IN REACTOR KINETICS

Overview

Our reactor kinetics studies have consisted primarily of analysis of chemical reaction rates, fluid mechanics of the reactor mixing processes, and limited testing of different reactor design concepts for emission control. Recent results from these studies and future plans are summarized in the following sections. Engine testing for this part of the program is being accomplished in our in-house test facility consisting of an engine-dynamometer test stand and associated equipment. This facility and exhaust gas analysis equipment is described in reference 10.

Combustion Kinetics Studies

Once the exhaust gas and secondar air are mixed in the thermal reactor, there is the question as to the residence time (proportional to reactor volume) and the temperature required for the oxidation of HC and CO to go to near-completion. The present thermal

reactors have internal volumes about the same as the displacement of the engine cylinders they serve, and this gives a residence time from about 5 to 50 milliseconds with the time increasing with decreasing engine load.

The exhaust gas temperature and mixed gas temperature also vary, but it is very hard to measure or really know these temperatures in pulsating flow. Cycle calculations give temperatures of the order of 1200-1400°K (1700 to 2050°F) for the gas as it leaves the exhaust valve (ref. 13) but this gas cools very rapidly through contact with the cooled cylinder head. Reference 3 reports reactor core gas temperatures cycling between about 650° and 900°K (700° and 1150°F) during the California driving cycle.

The question as to what extent chemical reaction rates limit reactor performance was examined through a computer calculation of the chemical kinetics of the CO and hydrogen (H_2) oxidation processes (ref. 14). CO and H_2 are the major combustibles in the exhaust with HC concentrations being considerably smaller. Since the kinetics of the CO and H_2 reactions are well established and since the reactions that are involved in the oxidation of these two combustibles should also bring about the oxidation of HC, it is believed that the times and temperatures estimated for the cleanup of CO should also apply to the cleanup of HC. Calculations were carried out on a system of 29 reversible chemical reactions using kinetic rate constants taken from the literature. Concentrations of the various species were determined as a function

of time by summing the extent of reaction of this large number of simultaneous and competing reactions. The individual rates are dependent on concentration and temperature, and the temperature, in turn, is dependent on changes in composition. This requires the computer integration of a set of first order, non-linear differential equations. Nitric oxide (NO) is a factor in some of the reactions, and a concentration of 0.1 percent (1000 ppm) was assumed for almost all of the calculations.

A typical result from this study is shown in figure 10 where CO concentrations are given as a function of reaction time for a cruise exhaust gas (air-to-fuel ratio = 14) diluted with secondary air to an air-to-fuel ratio of 17; temperature is the parameter on this plot. This kinetic analysis indicates that an initial temperature of 1000°K (1350°F) or higher is needed to bring the oxidation of CO to near completion in 10 milliseconds; a typical reactor might supply about this time at a cruise condition. Also, the analysis indicates that the time is much shorter with higher temperatures. So smaller reactors can be considered for higher operating temperatures.

A similar curve is shown in figure 11 for an idling engine (air-to-fuel ratio = 12) diluted with secondary air to stoichiometric. This plot indicates that a temperature of about 900°K (1150°F) gives near complete combustion in about 5 milliseconds whereas typical reactors supply of the order of 50 milliseconds

residence time at idle conditions. The kinetic study also showed that NO has a catalytic effect at temperatures below 1050°K (1425°F). This is shown in figure 11 for the two concentrations of NO at 900°K (1150°F) where reducing NO by half decreases the CO oxidation rate. This suggests that the reduction of NO to proposed levels of the order to 200 ppm may degrade the low temperature performance of thermal reactors. (Details on the kinetic approach and the results for several other engine conditions are given in reference 14.)

Fluid Mechanics Studies

The thermal reactor, when installed on a richer than stoichiometric carbureted engine, must first mix the exhaust with secondary air and then accomplish the oxidation process. This raises the question as to whether these systems are mixing limited, reaction rate limited, or both. The design approach would depend on the process that limits performance.

The mixing process is a complicated one since the exhaust is a pulsating, time-varying flow and the secondary air is usually added at a steady rate. Hardware geometries are also complex. Nevertheless, a computer modeling study of the fluid mechanics of this mixing process is underway and may yield useful design criteria. However, we have no results to report at this time.

Some mixing-related experiments were run on our test engine in an attempt to pulse in the secondary air to match the exhaust

gas flow. A similar study was made in reference 7 where a rotary valve was used to distribute air in turn to the exhaust ports of a multi-cylinder engine. The timing of the air pulse was fixed to coincide approximately to the time the exhaust valve was open. Our experiment differed from that in reference 7 in that the air pulse timing could be varied over 720 degrees of crank angle through use of fast acting solenoid valves and associated electronics. The duration of the air pulse and its rate could also be independently varied. The exhaust from a single cylinder of our V-8 was isolated and so treated. The downstream reaction zone was a simple tube. The emissions were determined as a function of crank angle. Preliminary results showed that there was a marked effect of pulse timing at low engine speeds, but a lesser effect at higher speeds; and that the overall reduction in emissions even with optimum pulse timing was less than desired. The results from this experiment will be reported in detail in a forthcoming NASA report.

Reactor Design Studies

Four reactor systems were tested for emission control under steady-state conditions with set values for engine speed and manifold vacuum (ref. 10). No attempt was made to simulate any driving or standard emission test cycle in these studies. Therefore, the test data cannot be converted into the grams-per-mile criteria of the federal test specifications.

The first system was just the regular cast-iron exhaust manifold along with the in-head air injection that were factory standards with this engine. This system was used as a baseline for comparison with the other three reactor systems. The second was the exhaust manifold reactor developed by and purchased from Dupont, a company with considerable experience with these reactors. It was substantially the same as the "Type VI" reactor of reference 5, but tailored to our engine.

The third system was a reactor designed and fabricated at the NASA-Lewis Research Center and sketched in figure 12. The overall dimensions and internal volume of this reactor were substantially the same as those of the second system. In this design, an attempt was made to promote mixing by using jets directed down the core and to avoid the direct impingement of gas against surfaces normal to the exhaust port (to reduce erosion effects). Runner tubes were shaped at one end to fit into the engine exhaust port and thereby decrease heat loss to the engine head. The other end of these tubes extended into and nearly all the way across the reactor core. The core end of these tubes was sealed off, and ports were machined in the sides to direct the gas axially down the core. The reactor core was made of AISI 304 stainless steel and was insulated by a multiple wrap of dimpled stainless steel foil around the core. The outer can was mild steel.

The fourth system was also a NASA-Lewis design and is sketched in figure 13. The concept here was to first collect the exhaust from all 4 cylinders of one bank, add the secondary air at a common point in the reactor, and then provide a reaction volume for further combustion. The geometry was quite simple and the reactor was made of AISI 304 stainless steel with external magnesia block insulation.

Considerably more emissions testing was done with the first three systems noted. These three systems were run at 12 different conditions of engine speed and load ranging from an idle condition of 600 rpm and 252 torr pressure (20 in. Hg vacuum) at the intake manifold to a moderately high power condition of 2000 rpm and 506 torr (10 in. Hg vacuum). With the lean (factory) carburetor settings and with secondary air, there was little difference in the concentrations of CO and HC emitted among the three systems; i.e., the two systems using reaction chambers performed no better than the simple exhaust manifold. CO emissions were quite low under all but the idle condition as would be expected from a lean engine, and the emission levels were probably low enough to meet 1975 standards. However, except for the highest power condition, the HC emissions were considerably higher than other investigators have reported with their better reactor systems and ranged from 50 to 200 ppm hexane. None of the three systems would meet future requirements for HC emissions. Only at the highest power condition were HC emissions down to desired levels, i.e. 30 ppm and below. Varying the secondary

air injection rate from half to twice standard had no significant effect on either CO or HC emissions.

The third system ("Mark I" design, figure 12) was also run with varying degrees of carburetor enrichment obtained by pressurizing the carburetor bowl. Under these conditions, the HC concentrations were reduced to the 5 to 20 ppm hexane range showing this reactor to be effective and to have emission control performance comparable to other reactors. However, neither fuel or air metering nor CO_2 analyses were available at the time these tests were run so that it is not possible to correlate performance with engine air-to-fuel ratio or to get any measure of the probable penalties in fuel economy.

Internal core material temperatures were measured in reactor systems 2 and 3 during these tests. These temperatures were always below 975°K (1300°F) when run on the lean engine except for the highest power condition; the control of HC emissions at these temperatures was also poor. At the highest engine power condition, the core temperatures were above 1100°K (1525°F) and the HC emissions were satisfactorily low (i.e. 15-30 ppm). Core temperatures increased when the engine was run richer, but excellent control of HC emissions (less than 30 ppm) was also obtained at lower temperatures than those required with the lean engine. For example, 15 ppm of hexane was measured at a condition where the core temperature was only 875°K (1100°F).

The fourth system (Lewis "Mark ii" design, fig. 13) was only tested at a few engine conditions. It did not perform well with either lean or rich carburetion, nor did it do as well as the simple cast-iron manifold. This reactor may have been ineffective because all of the secondary air was introduced considerably downstream of the exhaust valves. There have been suggestions (e.g. ref. 3) that a frontal or flame-type reaction right at the engine exhaust port contributes to emission control. This type reaction was not possible with the downstream secondary air injection. Thus, work on this concept was terminated.

Future Plans

Our continued studies in reactor kinetics will include both analytical and experimental analyses of reactor mixing processes. Also, additional reactor design studies are planned to improve mixing and more complete combustion of the exhaust gas products. The reactor design studies will include the development and evaluation of flame-holder concepts to provide faster combustion and heat-up of the ceramic reactors described in the Materials Technolcgy Program.

CONCLUDING REMARKS

The NASA-EPA technolcgy program for automotive thermal reactors is concerned primarily with the evaluation of materials and reactor design concepts and with the identification of rate-limiting factors in the combustion processes.

Engine-dynamometer tests of full-size reactors have shown that two ferritic iron alloys, GE 1541 and Armco 18-SR, and the nickel-base alloy Inconel 601 have potential for reactor use at peak temperatures of 1300°K (1900°F). Commerical coatings evaluated on a stainless steel substrate do not appear to be satisfactory for reactor use. For ceramic thermal reactors, a metal corrugation support system appears promising for preventing failure of the ceramic components by mechanical shock. Several candidate ceramics including glass-ceramics, silicon carbide, and silicon nitride are being evaluated in engine-dynamometer and vehicle road tests. There is considerable incentive to develop ceramic reactors since they have excellent high temperature use capability and since they are potentially lower-cost materials. But emphasis must be placed on reactor designs to support the ceramic components and to provide fast heat-up in order to effectively control emissions under cold-start conditions.

As to the combustion requirements, a kinetic analysis has shown that minimum gas temperatures of 900°-1000°K (1150° to 1350°F) are needed for the reasonably-rapid oxidation of carbon monoxide and presumably of hydrocarbons. But the oxidation reactions become very rapid once these temperatures are exceeded so that smaller, higher temperature reactors may be effective. Continued combustion studies include analytical and experimental analyses of reactor-mixing processes.

REFERENCES

1. Federal Register, Vol. 36, No. 39 (Feb. 26, 1971) and No. 40 (Feb. 27, 1971).

2. Chandler, J. M.; Smith, A. M.; and Struck, J. H.: Development of the Concept of Nonflame Exhaust Gas Reactors. SAE paper No. 486 M, March, 1962.

3. Cantwell, E. N.; and Pahnke, A. J.: Design Factors Affecting the Performance of Exhaust Manifold Reactors. SAE Transactions Vol. 74, (1966).

4. Cantwell, E. N., et. al.: A Progress Report on the Development of Exhaust Manifold Reactors. SAE Paper No. 690139, January 1969.

5. Cantwell, E. N., et. al.: Recent Developments in Exhaust Manifold Reactor Systems. Presented at the Inst. Mechanical Eng., London, England, May, 1970 (Paper available from DuPont de Nemours & Co., Wilmington, Del.).

6. Jaimee, A.; et. al.: Thermal Reactor-Design, Development and Performance, SAE Paper No. 710293, January 1971.

7. Glass, W.; Kim, D. S.; and Kraus, B. J.: Synchrothermal Reactor System for Control of Automotive Exhaust Emissions. SAE Paper No. 700147, January 1970.

8. Lang, Robert L.: A Well-Mixed Thermal Reactor System for Automotive Emission Control. SAE Paper No. 710608, June 1971.

9. Cole, D. E.; and Jones, C.: Reduction of Emissions from the Curtis-Wright Rotating Combustion Engine with an Exhaust Reactor. SAE Paper No. 700074, January 1970.

10. Hibbard, Robert R.; O'Neal, Cleveland; Riewaldt, William E.; and Young, Alfred W.: Comparison of Automotive Thermal Reactors on a V-8 Engine. NASA TM X-2230, March 1971.

11. Oldrieve, Robert E.: Exploratory Screening Tests of Several Alloys and Coatings for Automobile Thermal Reactors, NASA TM X-67984, December 1971.

12. Oldrieve, Robert E.: Evaluation of Some Candidate Materials for Automobile Thermal Reactors in Engine-Dynamometer Screening Tests-Interim Report, NASA TM X-67970, December 1971.

13. Zeleznik, Frank J.: Thermodynamics of the Internal Combustion Engine. Capter III in Kinetics and Thermodynamics in High-Temperature Gases. NASA SP-239, March 1970.

14. Brokaw, Richard S.; and Bittker, David A.: Carbon Monoxide Oxidation Rates Computed for Automobile Exhaust Manifold Reactor Systems. NASA TN D-7024, December 1970.

TABLE I - FACTORS AFFECTING MATERIALS SELECTION FOR AUTOMOBILE THERMAL REACTORS

HIGH COMBUSTION TEMPERATURE
- 1150° to 1300°K (1600° to 1900°F) in ordinary operation
- 1525°K (2300°F) under spark-out conditions

LONG CYCLIC LIFETIME
- 50,000 to 100,000 mile life
- 10,000 to 20,000 engine on/off cycles

SEVERE CORROSION AND EROSION CONDITIONS
- High temperature oxidation
- Erosion from exhaust gas particulates
- Chemical attack from fuel constituents

LOW COST
- Use of relative inexpensive and available materials
- Easy fabrication and assembly

TABLE II - ALLOYS AND COATINGS SELECTED FOR EVALUATION

ALLOY	COMPOSITION
* AISI 310	Fe-25Cr-20Ni-2Mn-1.5 Si
AISI 651	Fe-19Cr-9Ni-1.5 Mo-1.5 W
* ARMCO 18-SR	Fe-18Cr-2Al-1Si
* GE 1541	Fe-15Cr-4Al-1Y
HASTELLOY-X	Ni-22Cr-9Mo-1.5 Co-18Fe
* INCONEL 601	Ni-23Cr-14Fe-1.4 Al
NIMONIC 75	Ni-20Cr-5Fe-Si

COATING	SUBSTRATES
Al	AISI 651, INCOLOY 800
* Cr-Al	" , AISI 310
* Ni-Cr	"
SOLARAMIC	"
SERMETEL J	"
* NBS GLASS	"

* ENDURANCE TESTED.

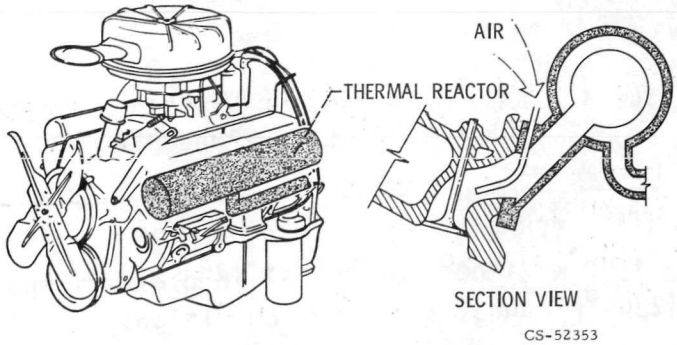

FIGURE 1. - THERMAL REACTOR INSTALLATION.

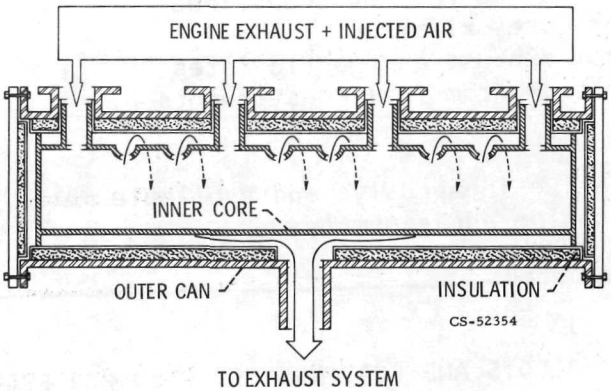

FIGURE 2. - SCHEMATIC OF CIRCUMFERENTIAL FLOW THERMAL REACTOR.

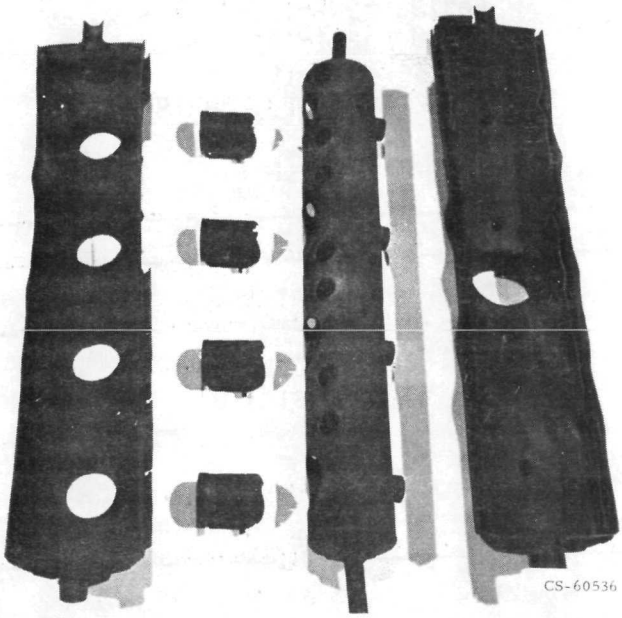

Figure 3. - Thermal reactor components after engine test. Serial no. 8; material: GE1541; coating: none; after 200 hours.

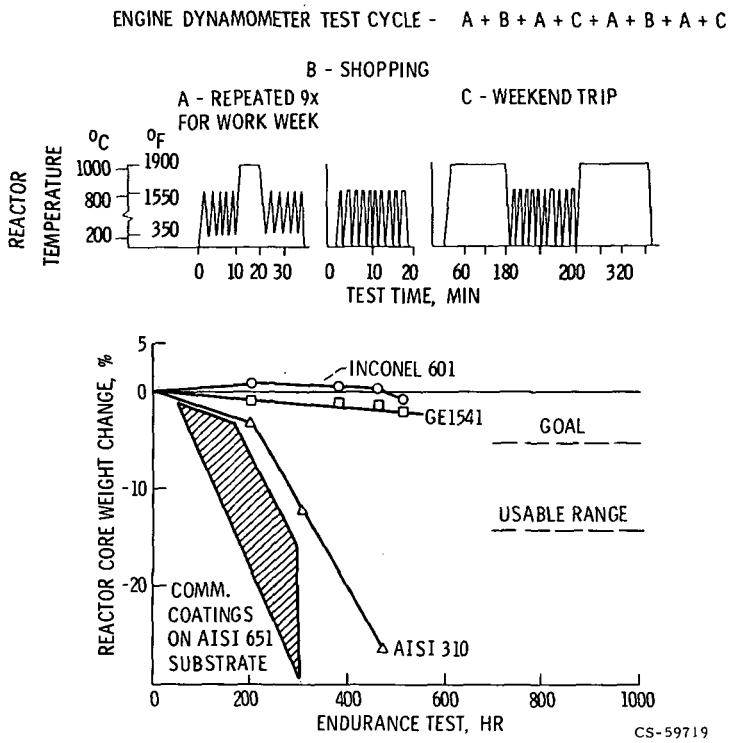

FIGURE 4. - MATERIAL PERFORMANCE IN AUTOMOTIVE REACTOR ENDURANCE TESTS.

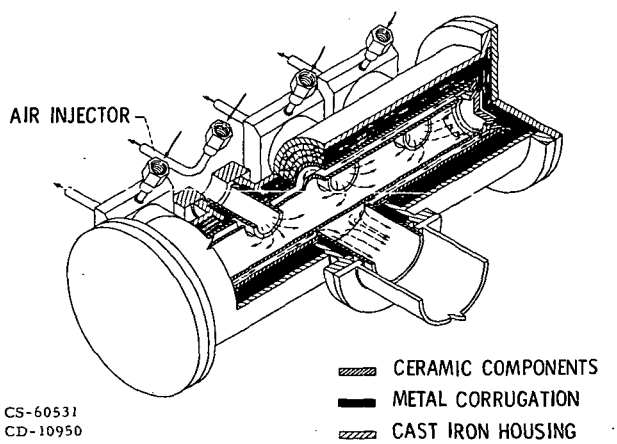

FIGURE 5. - AUTOMOBILE THERMAL REACTOR CONCEPT UTILIZING CERAMIC CORES WITH SHEET METAL CORRUGATION SUPPORTS

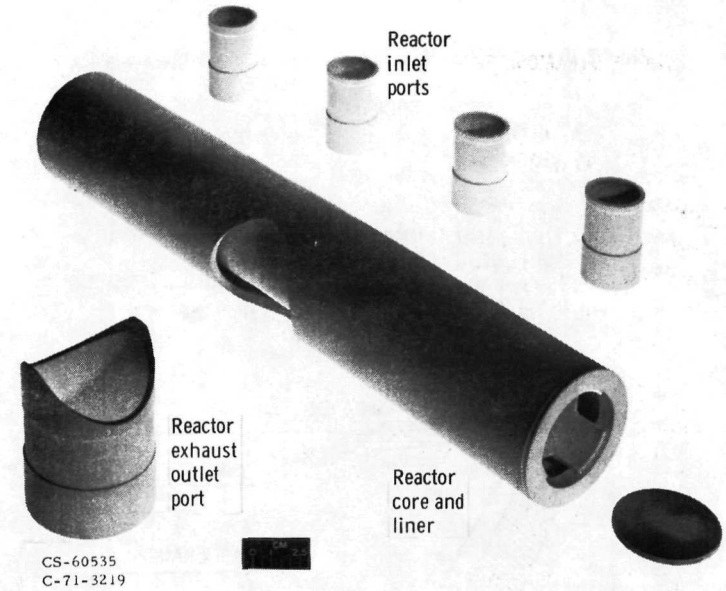

Figure 6. - Ceramic thermal reactor components.

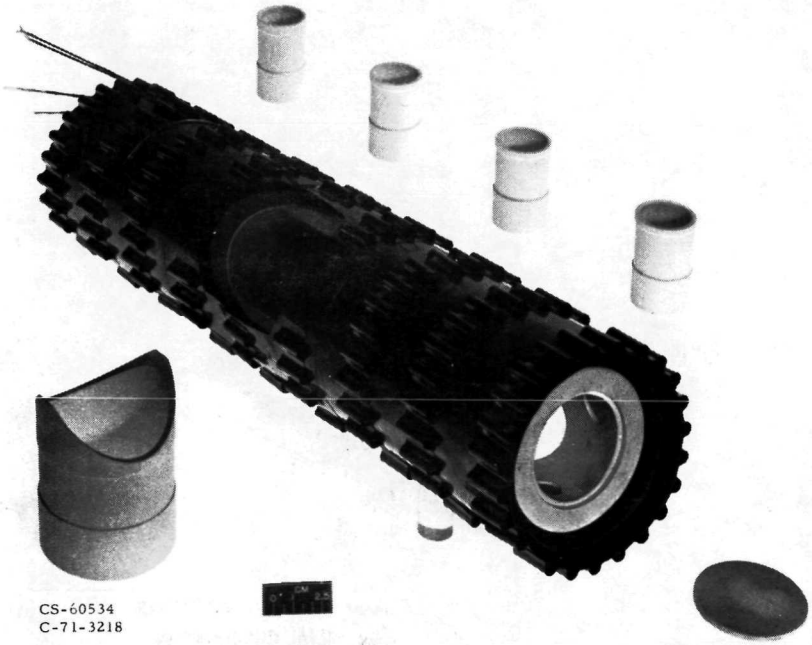

Figure 7. - Metal corrugation support for ceramic thermal reactor.

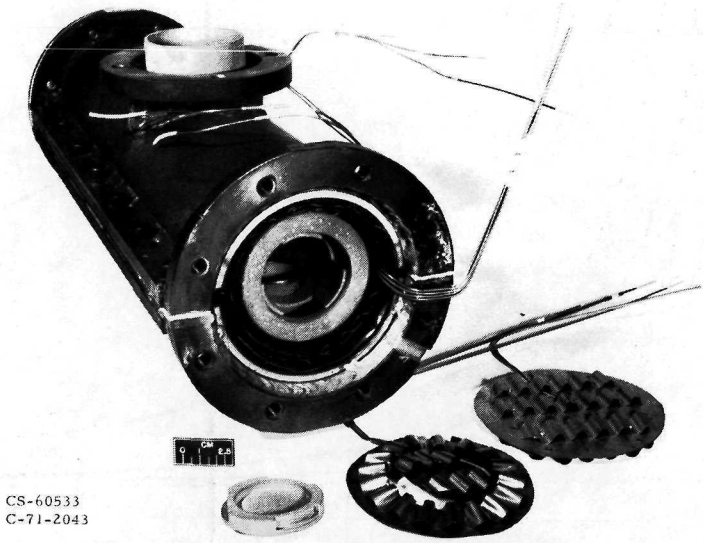

Figure 8. - Final assembly of ceramic thermal reactor.

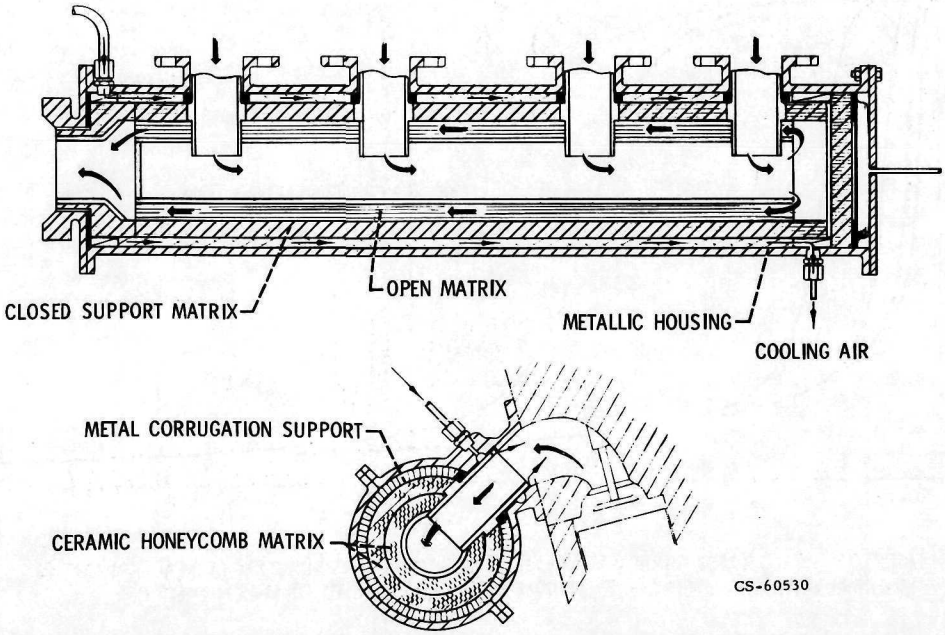

FIGURE 9. - AUTOMOBILE THERMAL REACTOR CONCEPT USING HONEYCOMB MATRIX OF GLASS CERAMIC

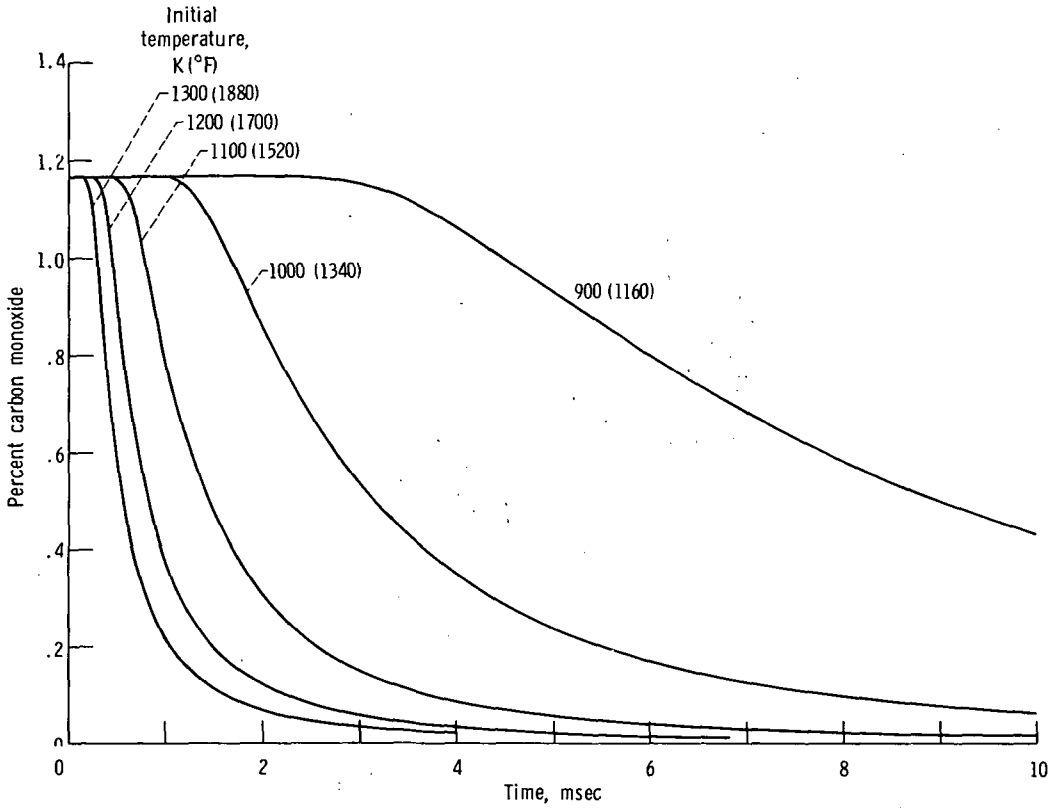

FIGURE 10. - CALCULATED CARBON MONOXIDE CONCENTRATION AS FUNCTION OF REACTION TIME IN THERMAL REACTORS. INITIAL A/F = 14 (CRUISE CONDITION), DILUTED TO A/F = 17 (LEAN).

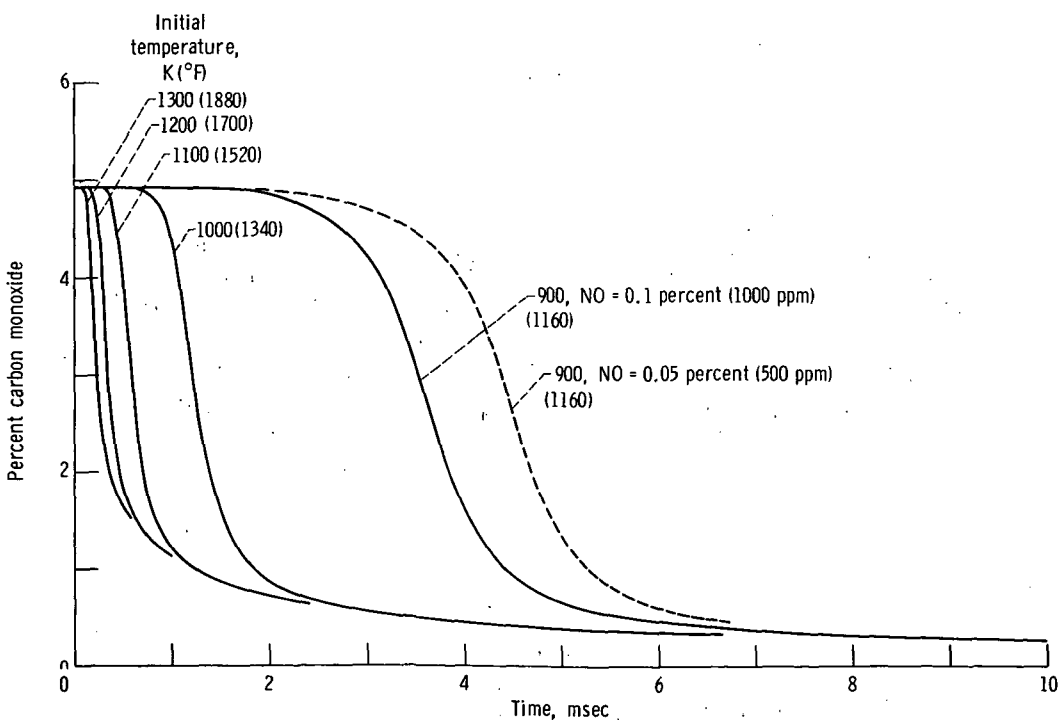

FIGURE 11. - CALCULATED CARBON MONOXIDE CONCENTRATION AS FUNCTION OF REACTION TIME IN THERMAL REACTORS. INITIAL A/F = 12 (IDLE CONDITION), DILUTED TO STOICHIOMETRIC.

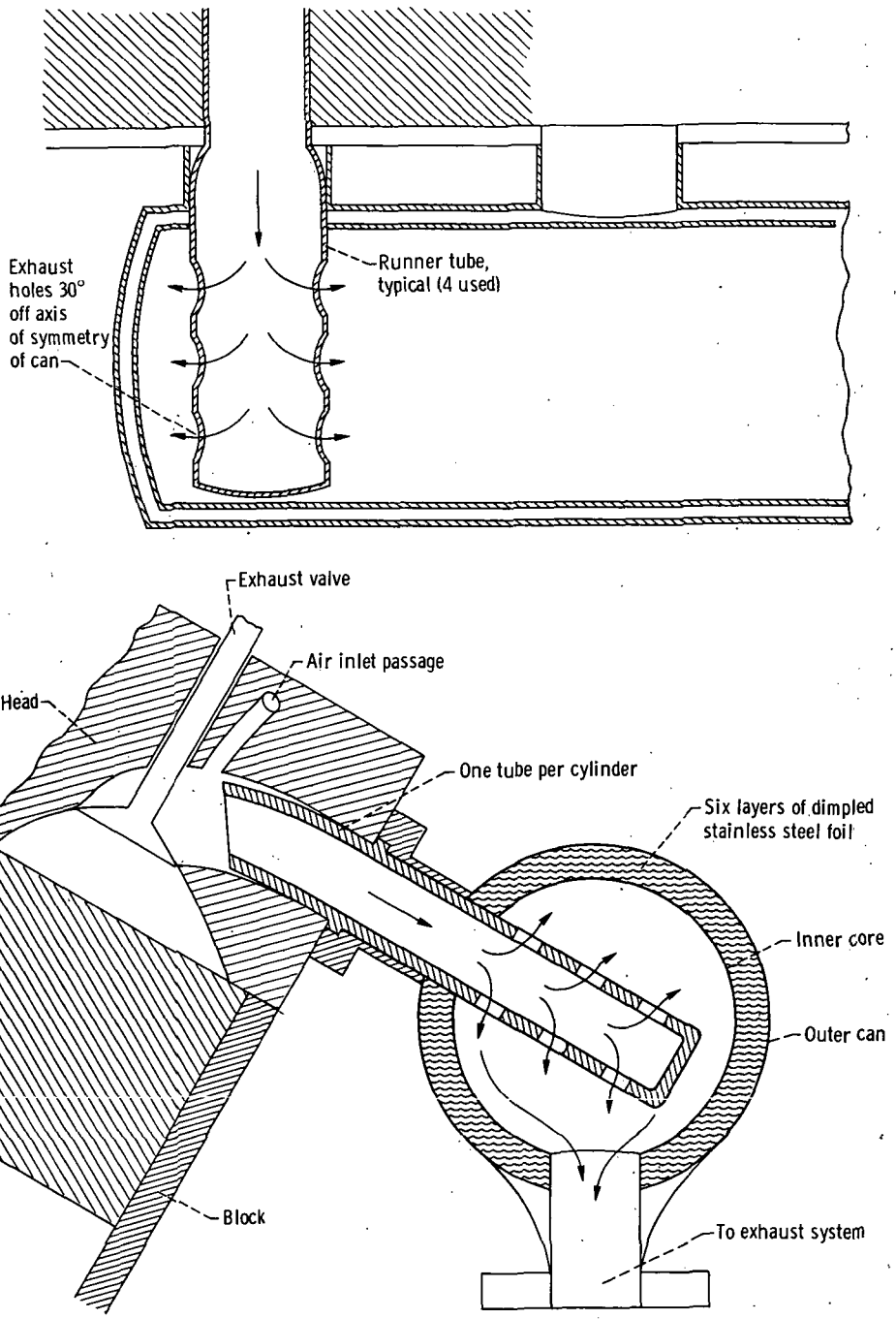

FIGURE 12. - NASA REACTOR CONCEPT FOR IMPROVED GAS MIXING. ("MARK I" DESIGN)

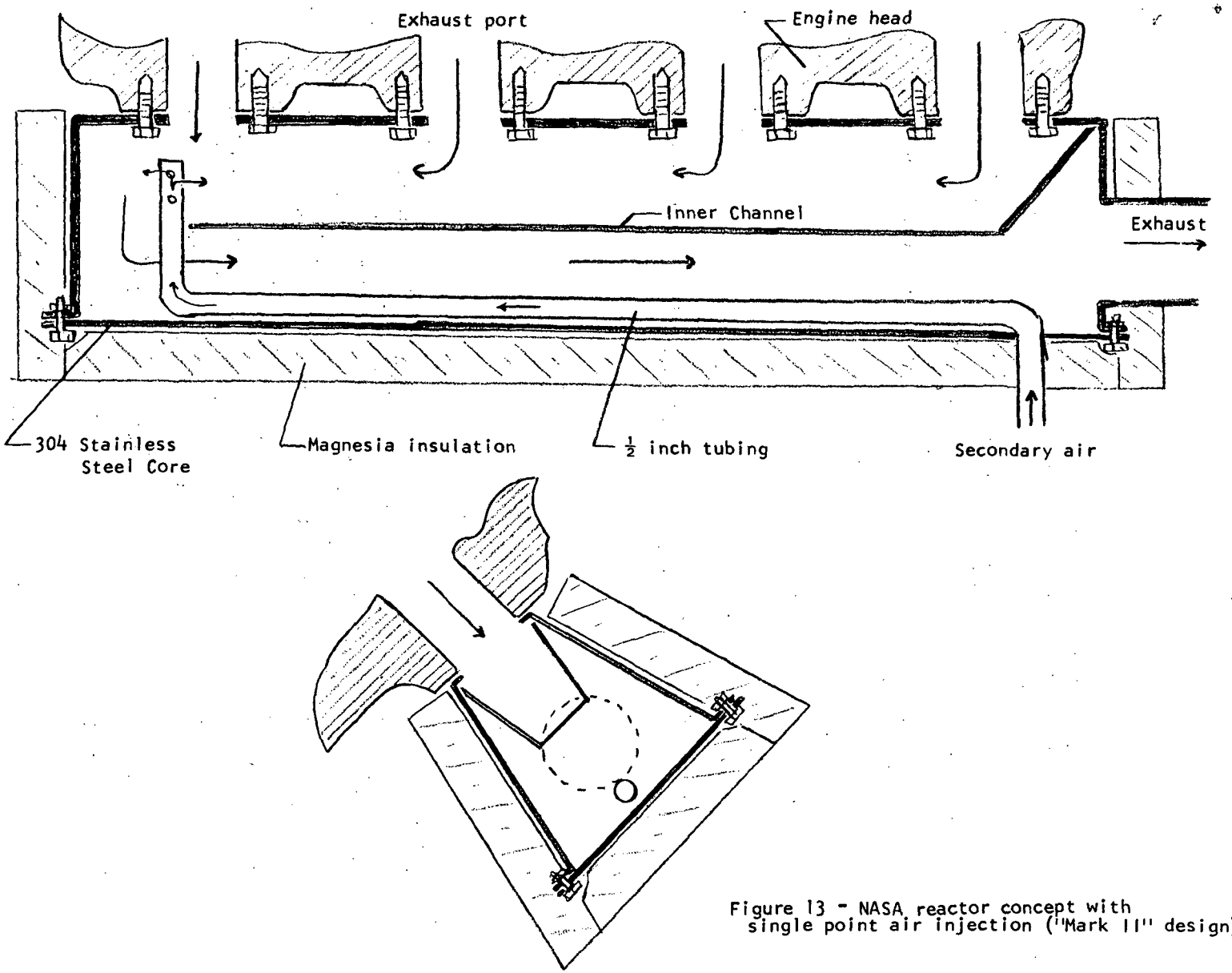

Figure 13 - NASA reactor concept with single point air injection ("Mark II" design)

NASA-Lewis-Com'l