https://ntrs.nasa.gov/search.jsp?R=19720013240 2018-07-25T13:12:10+00:00Z

STAGE SEPARATION OF PARALLEL-STAGED SHUTTLE VEHICLES, A CAPABILITY ASSESSMENT

M. J. Hurley, Design Specialist
Flight Technology, Space Shuttle

G. W. Carrie, Senior Design Engineer
Vehicle Design & Structures, Space Shuttle

Convair Aerospace Division of General Dynamics
San Diego, California

INTRODUCTION

Stage separation has long been recognized as a major Space Shuttle problem area. The parallel-staged or "piggyback" arrangement precludes use of separation techniques developed for tandem vehicle stages. Also, since most shuttle configurations are not symmetrical (thereby complicating interactions), experience gained from Titan IIIC solid motor separation is not directly applicable. Unlike present-day launch vehicle stage separation, the depleted Space Shuttle booster is as massive as the orbiter element and large intervehicular interaction is probable. Abort separation is likely to yield the most severe separation condition, since aerodynamic loading is significantly higher during the abort regime. Aerodynamics, including interference effects, will dominate the separation dynamics for all but the lowest dynamic pressures.

Convair Aerospace has been conducting detailed analytical and experimental studies of multibody staging directly related to Space Shuttle for three years (Ref. 1 through 10). In support of these studies, one of the most comprehensive multibody separation simulations in existence today was developed on Independent Research and Development (IRAD) funds (Ref. 3). This simulation, in its various stages of development, was the analytic basis for the various analytical studies performed to date.

This paper is essentially self-contained; it reviews the genesis of the forward link separation concept, evolves the stage separation system from its initial concept through detailed preliminary design, and presents major conclusions and results of supporting analyses. The paper contains all pertinent material generated as a consequence of the Space Shuttle Phase B study which was documented in June of 1971. In some areas, the approach differs from our Phase B baseline and reflects results from more current analyses; these differences are not always noted in the text that follows.

STAGE SEPARATION CONCEPTUAL ANALYSIS

This table presents 16 qualitative measures used to perform a preliminary evaluation of various separation system concepts so that a few of the better concepts might survive. The first three of these "measures" were in actuality merely categories used to label the various candidates. These categories were useful in ensuring that the candidates to be considered adequately span or exhaust the conceptual possibilities of systems that can perform the separation function. The remainder were measures intending to reject obviously poor candidates so that a select few may be looked at in detail in a subsequent design-oriented evaluation. A brief discussion of each should serve to illustrate its intent.

By commonality (see table) we mean the degree to which the separation system does not duplicate the functions of other systems – e.g., the support and release (of these supports) functions of the interstage attachment system. Complexity is an obvious factor influencing design (nonrecurring) costs, qualification testing (nonrecurring) costs, maintenance (recurring) costs and even reliability. As such, complexity cannot be considered an independent measure, but its ease of determination makes it a valuable qualitative measure. Further, complexity has a direct bearing on the risk that such a conceptual approach might cost considerably more than expected to design and qualify or, worse, must eventually be scrapped in favor of an alternative approach.

Dispersion sensitivity is meant to measure the degree to which the system concept can tolerate the inevitable variability of contributing factors; e.g., engine thrust rise and thrust decay uncertainties, aerodynamic load variations, variations in mass properties, sequence timing uncertainties, etc. It is a general consequence of constraints that systems properly employing constraints will be less dispersion sensitive (other things being equal), since the separation trajectory is restrained from entering an undesirable clearance-critical region.

Reliability and safety are also not independent. Reliability is the certainty that the system will perform as designed when called upon to do so, including known variability (and its probability) in its operation. Safety is how safe the concept itself might be and embodies the consequence of potential (i.e., probable) failures in terms of the loss of life and equipment.

Maintainability is the ease of maintenance of the system in operation and includes the system turnaround requirement. Nonrecurring costs are distinguished from recurring costs in that the former is a one-time cost (development, testing, and initial procurement) and the latter a cost per operation (per flight).

Some separation concepts can be used only with "belly-to-belly" or "belly-to(booster's) back" parallel arrangements (clusters) and imply operational restructions. All concepts investigated applied to parallel (as opposed to tandem) arrangements.

The factors of separation system performance and equivalent (booster) weight are estimates of the adequacy of the envisioned system in performing its intended function efficiently. The final category brings out the degree to which the candidate concepts can be extended into the abort regime where the booster mass is substantially increased and aerodynamic loading becomes a major problem.

1302

QUALITATIVE EVALUATION FACTORS FOR CANDIDATE SEPARATION SYSTEM CONCEPTS

ENERGY SOURCE	MAINTAINABILITY
ENERGY CONVERSION	NONRECURRING COST
NUMBER OF CONSTRAINTS	RECURRING COST
COMMONALITY	BELLY-TO-BELLY MOUNT
COMPLEXITY	BELLY-TO-BACK MOUNT
DISPERSION SENSITIVITY	SEPARATION PERFORMANCE
RELIABILITY	EQUIVALENT WEIGHT
SAFETY	EXTENDABILITY TO ABORT

Figure 1

QUALITATIVE EVALUATION SUMMARY

This table is a condensed summary of the conceptual systems as they evolved from a system with no (or zero) constraints to systems that constrain the relative trajectory to all but motion along the "guide's" arc. Energy sources considered ranged from separate systems (solid-propellant rockets or pneumatic sources) to systems using the energy (acceleration) available through vectoring the orbiter or booster main propulsion acceleration.

The table indicates that additional reliability and cost improvements accrue through using the main propulsion system on either the orbiter or booster as the energy source. This follows, since (1) these systems are already provided and are designed to be highly reliable, (2) qualification testing is already provided, and (3) the booster propulsion system (even in case of abort) is in operation and instantly ready to perform the separation function. It is this last consideration (continuity) that makes the forward or reversed four-bar linkage system such an attractive candidate. Before separation, the four-bar linkage is transmitting the main propulsion loads into the orbiter in the role of reversed "drag" links. These links are already in compression and (in the event of an immediate release) reacting full booster thrust (as could occur for an immediate abort), providing a remarkable degree of continuity as these links begin to accelerate angularly along their arc. This continuity can mitigate impact loading and substantially reduce link-load overshoot while still providing a high acceleration component into the orbiter (i.e., the elastic structure is already "deformed").

Again, it should be observed that dispersion sensitivity can be reduced through constraints by restraining the separation trajectory from entering an undesirable region and providing good separation system velocities at restraint release. This technique is what gives the forward linkage system such a good evaluation in this regard.

The table indicates that two concepts definitely should be pursued: lateral rockets and the four-bar linkage (particularly the linkage using booster thrust). If abort separation is a requirement, the linkage using booster thrust appears to be the best candidate system.

QUALITATIVE EVALUATION SUMMARY

FACTORS UNDER CONSIDERATION	LATERAL ROCKETS	PNEUMATIC PISTONS	DUAL RAIL SYSTEMS		FOUR-BAR LINKAGE SYSTEMS	
			FORWARD	REARWARD	REARWARD	FORWARD
ENERGY SOURCE	ROCKETS	GHe^2	ORBITER ENGINES	BOOSTER ENGINES	ORBITER ENGINES	BOOSTER ENGINES
ENERGY CONVERSION	THRUST	4 PISTONS	2 RAILS	2 RAILS	4 LINKS	4 LINKS
NUMBER OF CONSTRAINTS	0	3	5	5	5	5
COMMONALITY	EXCELLENT	GOOD	GOOD	GOOD	VERY GOOD	VERY GOOD
COMPLEXITY	VERY LOW	HIGH	HIGH	HIGH	LOW	LOW
DISPERSION SENSITIVITY	LOW	MEDIUM	HIGH	HIGH	MEDIUM	VERY LOW
RELIABILITY	HIGH	FAIR	GOOD	FAIR	GOOD	VERY GOOD
SAFETY	GOOD	POOR	FAIR	FAIR	FAIR	EXCELLENT
MAINTAINABILITY	VERY GOOD	POOR	POOR	POOR	EXCELLENT	EXCELLENT
NONRECURRING COST	VERY LOW	VERY HIGH	HIGH	HIGH	MODERATE	MODERATE
RECURRING COST	HIGH	NEGLIGIBLE	MODERATE	MODERATE	NEGLIGIBLE	NEGLIGIBLE
BELLY-TO-BELLY MOUNT?	YES	YES	YES	YES	YES	YES
BELLY-TO-BACK MOUNT?	YES	YES	YES	NO	YES	YES
SEPARATION PERFORMANCE	GOOD	EXCELLENT	FAIR	POOR	GOOD	EXCELLENT
EQUIVALENT WEIGHT	LOW	MODERATE	HIGH	VERY HIGH	LOW	LOW
EXTENDABILITY TO ABORT	LOW	VERY LOW	FAIR	GOOD	FAIR	EXCELLENT

Figure 2

SPACE SHUTTLE SEPARATION SYSTEM TRADE STUDY RESULTS

The objective of this study (Ref. 7) was to develop and evaluate several candidate concepts and to select a design that best met the requirements of withstanding all flight loads of the mated configuration during ascent, while providing capability for safe separation from liftoff to normal staging.

Candidate concepts were evaluated based on separation characteristics during normal staging, maximum αq, and immediately off the pad.

NORMAL STAGING – Capability for safe separation considering the system tolerance to off-nominal design conditions of booster and orbiter thrust, release time, and attitude control were evaluated. The rocket and piston concepts were the heaviest of the alternatives studied, due principally to coast-time propellant requirements. The links using booster thrust and the rocket concepts are the most tolerant of these off-nominal conditions. The links-using-booster-thrust concept provides the best separation distance versus time. The rocket and piston concepts investigated require zero g engine start capability for the orbiter for safe operation. Because they react ahead of the booster cg, the pistons, rails, and links using the orbiter-thrust concept gave high post-separation pitchdown rates to the booster.

MAXIMUM αq – The concepts that use orbiter thrust to provide lateral acceleration are totally inadequate in supplying safe separation due to the low T/W of the orbiter. The piston and rocket concepts incur significant weight penalties over that required for normal staging. Additionally, the piston reaction ahead of the booster cg pitches the booster into higher aerodynamic loading. The links-using-booster-thrust concept provides satisfactory separation with minor weight penalty.

ABORT IMMEDIATELY OFF THE PAD – The reduced booster thrust required for all the concepts except the links-using-booster-thrust results in unsatisfactory booster attitude control (actually maneuvering). Piston and rocket concepts incur additional weight penalties due to the heavier booster.

CONCEPT COMPARISON

EVENT	ROCKET	PISTON	RAILS	LINKS, USING ORBITER THRUST	LINKS, USING BOOSTER THRUST
NORMAL STAGING					
WEIGHT KG (LB.*)	10,251 (22,600)	10,569 (23,300)	8,256 (18,200)	7,303 (16,100)	8,165 (18,000)
SEPARATION DISTANCE	GOOD	GOOD	POOR	POOR	GOOD
POSITIVE g FOR ORBITER ENGINE START	NO	NO	YES	YES	YES
BOOSTER PITCHDOWN RATE	LOW	HIGH	HIGH	MEDIUM	LOW
FAILURE TOLERANCE	GOOD	POOR	POOR	POOR	GOOD
ABORT - MAXIMUM α q					
BOOSTER THRUST	43%	43%	0	0	100%
SEPARATION TRAJECTORY	GOOD	GOOD	NOT ACCEPTABLE	NOT ACCEPTABLE	GOOD
BOOSTER ATTITUDE CONT.	PARTIAL	NOT ACCEPTABLE	NOT ACCEPTABLE	NOT ACCEPTABLE	FULL
ΔWEIGHT PENALTY KB (LB*)	2,722 (6,000)	7,484 (16,500) (2,000 ORBITER, 4,500 BOOSTER)	HIGH	HIGH	LOW
ABORT - OFF THE PAD					
BOOSTER THRUST	65%	65%	58%	58%	100%
RELATIVE FORWARD/AFT ACCELERATION	GOOD	NOT ACCEPTABLE	POOR	POOR	GOOD
ΔWEIGHT PENALTY KM (LB.*)	2,722 (6,000)	7,484 (16,500) (2,000 ORBITER 4,500 BOOSTER)	HIGH	HIGH	LOW

*TOTAL MATING/SEPARATION SYSTEM ESTIMATED WEIGHTS EXPRESSED AS EQUIVALENT BOOSTER WEIGHT.

Figure 3

SEPARATION TRAJECTORY COMPARISON, NORMAL STAGING

The links-using-booster-thrust concept was recommended as being the most failure tolerant, providing the best separation characteristics for normal staging, having the greatest potential for safe separation at maximum αq and immediately off the pad, and for satisfying all other abort conditions.

The figure illustrates the clearance versus time achieved for each candidate at normal staging.

SEPARATION TRAJECTORY COMPARISON, NORMAL STAGING

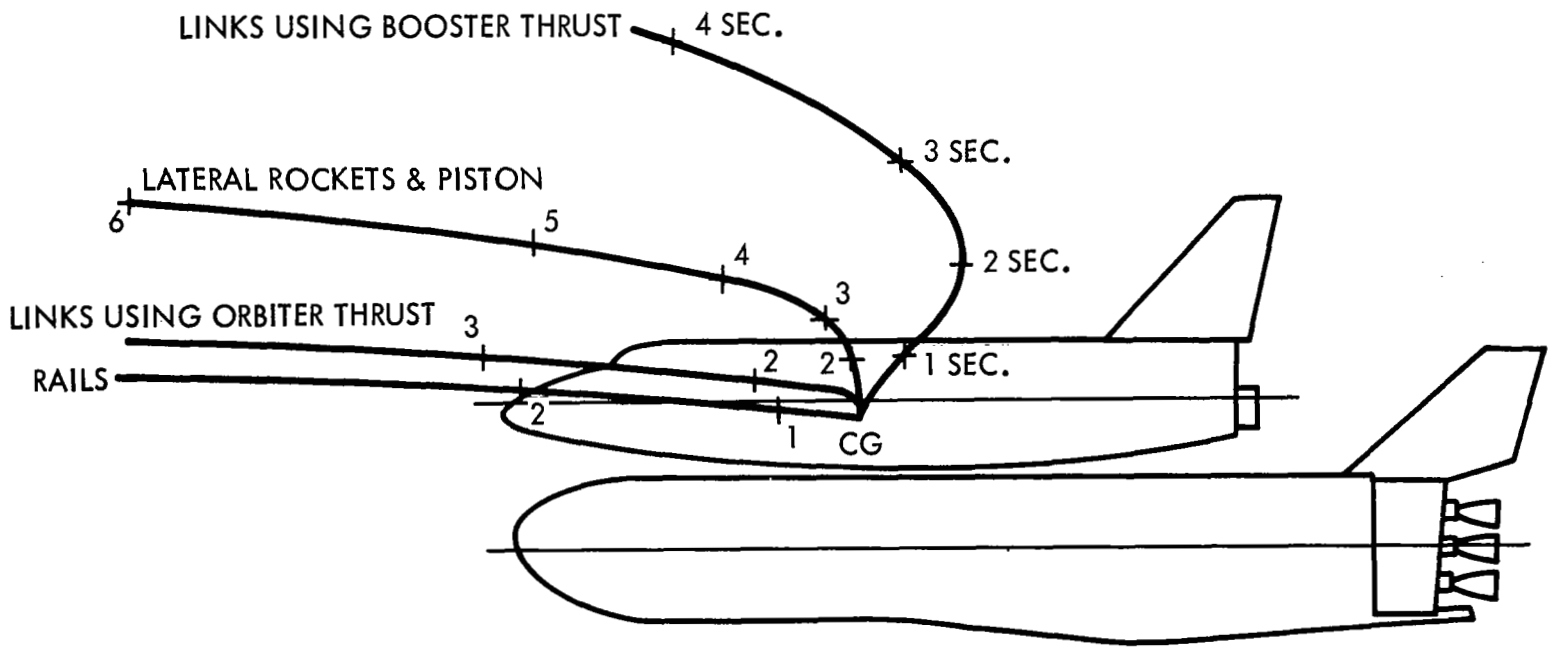

Figure 4

ABORT CRITERIA

Abort criteria necessary to satisfy the program requirements included intact vehicle abort capability. Intact abort implies the capability of the booster and orbiter to separate and both continue flight to a safe landing, with a full payload aboard the orbiter. In addition, a vehicle performance Level II requirement specified, "a single main engine out on the booster shall permit nominal mission continuation; on the orbiter, a safe abort capability," The FO/FS subsystem design criterion was specified to reduce the likelihood of an abort occurring, whereas the fail-safe level of subsystems operation is, in fact, an abort operating procedure.

Failure conditions are classified in one of three categories as a function of the time-criticality of the situation, as illustrated in the table. Noncritical failures are those that (by definition) allow continued safe mated flight to propellant depletion. Examples of this type of failure are detection of minor leaks or loss of any subsystem to the FS level. Noncritical failures typically jeopardize mission continuance but not mated flight. Both vehicles are expected to be recovered successfully.

Critical failures are defined as those in which continued mated flight to booster propellant depletion are either deemed not possible or not advisable. Examples of this type of failure are a fire or localized explosion, significant loss of booster thrust and/or thrust vector control capability, or major leaks that could easily result in a fire, explosion, or significant loss of booster thrust. Critical failures typically jeopardize mated flight and early, safe stage separation is advised. The time-criticality is principally at issue for critical failures. Required reaction time can range from a few seconds to a minute or more before stage separation must be accomplished. Following stage separation, both vehicles are required to be recoverable if possible; that is, stage separation itself shall not jeopardize vehicle recovery.

Catastrophic failures are defined as those for which there is insufficient time to effect stage separation or, following separation, insufficient time to recover the vehicles and/or crew. Examples of this type of failure are near-immediate explosions, major primary structural failure, or major loss of thrust shortly after liftoff. This latter condition is catastrophic because insufficient time is available following separation to obtain the required separation clearance before the booster impacts in the vicinity of the launch complex and destroys itself and the orbiter. No design requirements were provided for this type of failure. (Crew ejection seats were to be provided during the development flight test program because of initial flight uncertainties and a greater risk of failures occurring. The ejection seats in the booster and orbiter were to be removed for the operational phase.)

ABORT FAILURE CATEGORIES

CATEGORY	FAILURE CLASS	EFFECT	ABORT ACTION
NONCRITICAL	MINOR LEAK LOSS OF ANY SUBSYSTEM TO FS LEVEL	CAN RECOVER VEHICLES AND CREWS	ABORT MISSION (CONTINUE MATED FLIGHT)
CRITICAL	FIRE/LOCAL EXPLOSION SIGNIFICANT LOSS OF THRUST AND CONTROL CAPABILITY MAJOR LEAK	SUFFICIENT TIME TO RECOVER VEHICLE AND RESCUE CREW WHERE BOTH ARE IN DANGER OF CATASTROPHIC LOSS	ABORT MATED FLIGHT (INTACT RECOVERY)
CATASTROPHIC	EXPLOSION MAJOR STRUCTURAL FAILURE LOSS OF BOOSTER THRUST SHORTLY AFTER LIFTOFF	INSUFFICIENT TIME TO RECOVER VEHICLE AND/OR CREW	NONE

Figure 5

MATED ASCENT ABORT PROCEDURES

The abort procedure for noncritical failures is to fly the mated configuration to booster propellant depletion (low q), separate, and fly the booster back to the primary landing site. The orbiter then has three options: (1) continue the mission from the normal staging velocity, if attained; (2) continue the mission with the orbiter engines throttled up to 109% EPL to make up booster velocity losses (if less than 50 fps); or (3) return to continental United States when the velocity losses exceed the mission requirements. The separation system at nominal staging conditions was to be designed for loss of thrust or thrust vector control (TVC) from any two booster engines and loss of thrust or TVC from any one booster and one orbiter engine.

After a noncritical failure, the flight to propellant depletion can be along the nominal trajectory if mission completion is still possible or can be along an alternative trajectory if mission completion is not possible. The staging velocity associated with noncritical normal separation conditions is related to the time of failure, loss of TVC, or engine thrust. With the loss of orbiter injection velocity capability, alternative ascent trajectories are required to minimize downrange flyback of the booster and orbiter.

In the event of a critical failure, preseparation maneuvers would be desirable, if possible, to put the mated configuration in a more favorable condition for separation, such as lower dynamic pressure. For early separation during mated flight, two conditions had to be satisfied: (1) a positive head for orbiter engine start-to-mainstage thrust must be provided, and (2) separation subsystem must function, considering inadvertent booster engine cutoff signals and the maximum booster thrust level required for safe booster recovery. The induced vehicle loads and control conditions had to be within the design capability of the baseline vehicles.

Following an early stage separation, it is required that both vehicles be recovered if at all possible. Since neither can enter or land safely with any significant main propellants onboard, it is necessary to dispose of these propellants, which was to be accomplished by burning them through the main engines.

MATED ASCENT ABORT PROCEDURES

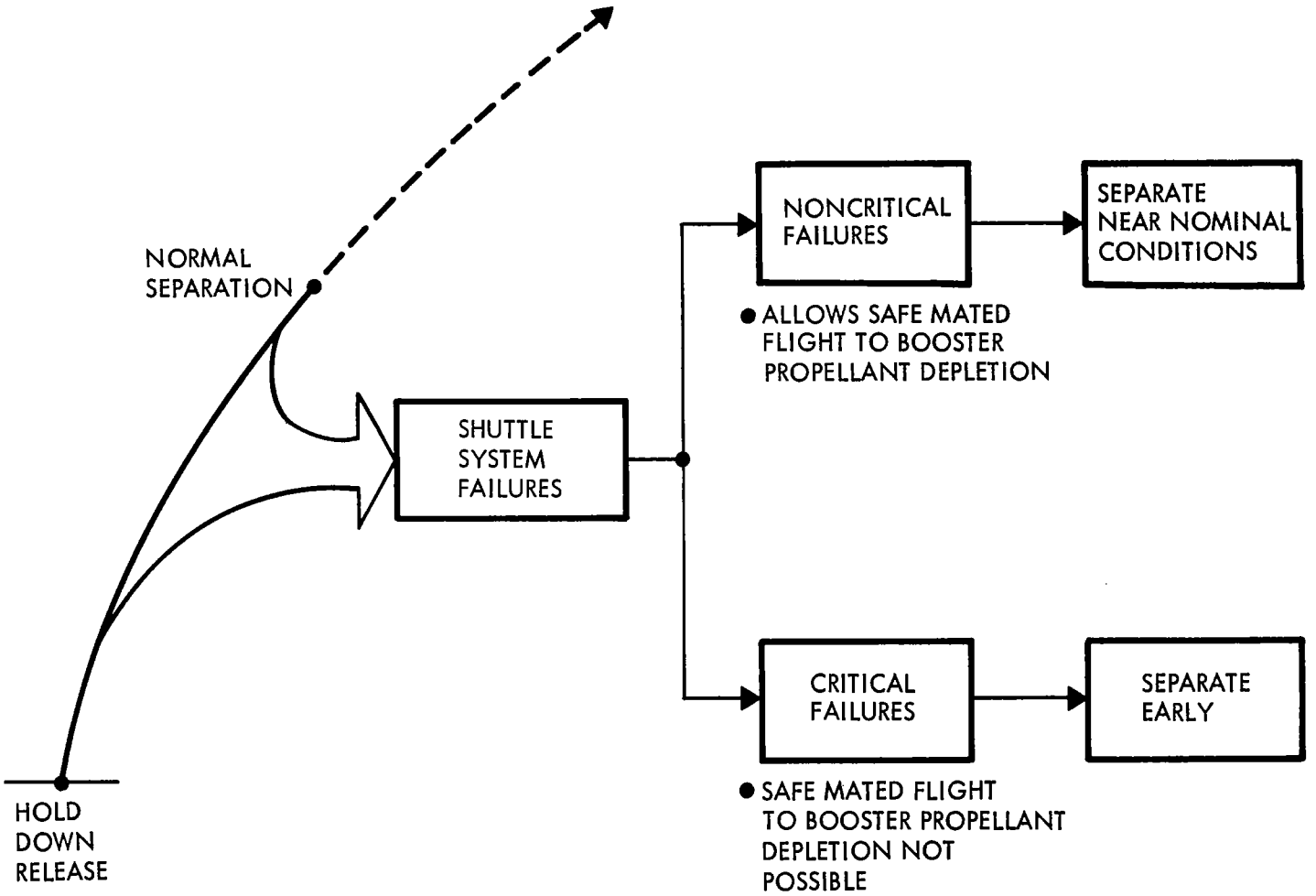

Figure 6

STUDY CONFIGURATION

The study configuration consists of the North American Rockwell 161C delta-wing orbiter and the General Dynamics B-9U delta wing booster. The orbiter is launched piggyback on the booster and located slightly ahead of the booster nose. Previous studies (e.g., Ref. 2, 4, and 8) had investigated the proximity aerodynamics and determined these effects must be included for any realistic study of stage separation capability in a high aerodynamic pressure regime.

The capability of booster recovery following separation had been previously analyzed (Ref. 9 and 10) and determined to be feasible. What remained was to assess the ability of the parallel-staged shuttle to separate at various points along its ascent trajectory.

It should be noted that this study is directly applicable to many of the tandem-staged shuttle arrangements should it be desired to stage the orbiter from its external propellant tanks, leaving them with the boooster.

STUDY CONFIGURATION

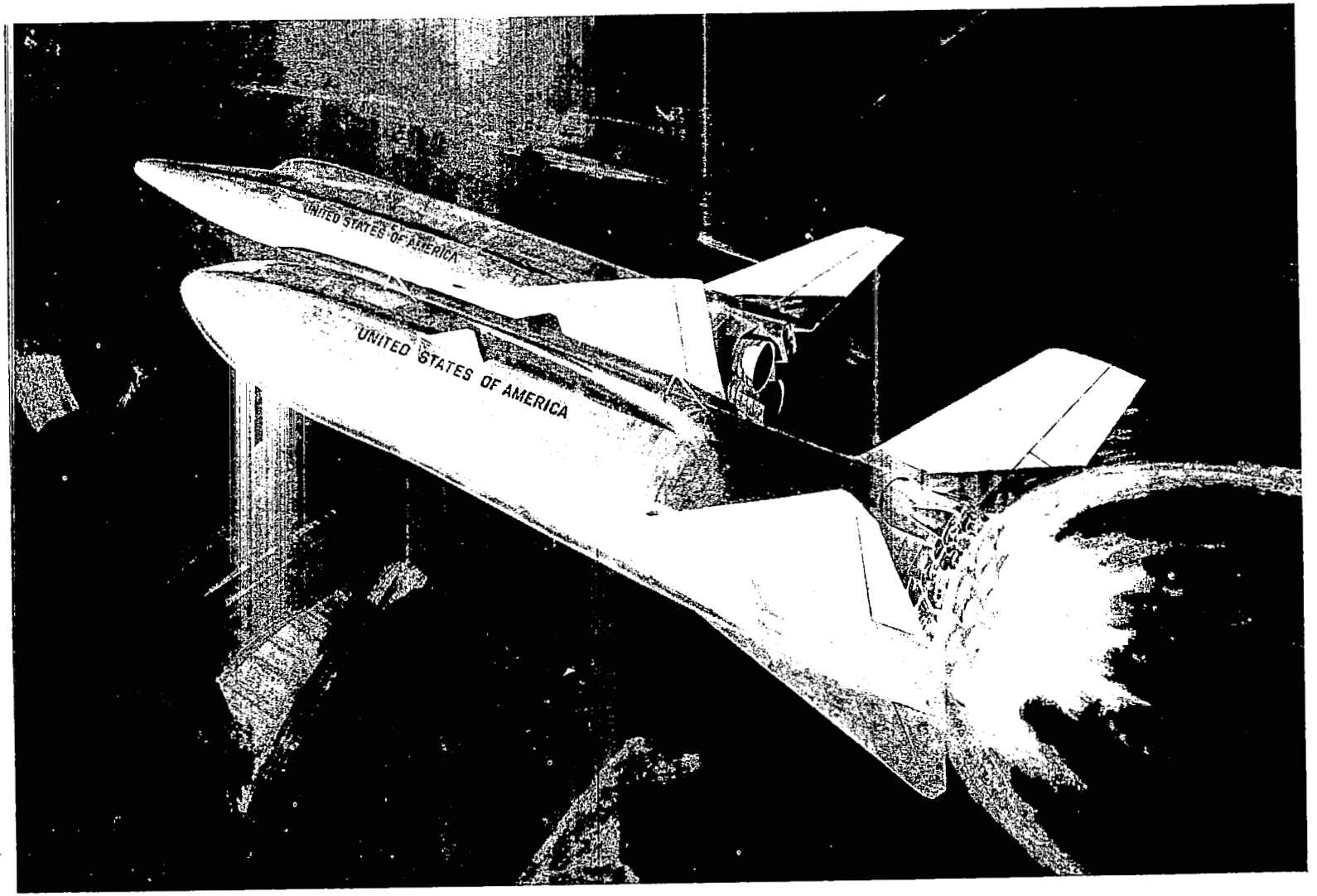

INVESTIGATIVE REGION FOR ABORT SEPARATION

This figure illustrates the regions under investigation and the range of parameter encompassed. Included in the study was pre-liftoff separation of the orbiter from the booster while the latter remained on the launch pad. Also included was an investigation of normal staging with dispersions in system parameters and loss of either or both orbiter main propulsion engines.

INVESTIGATIVE REGION FOR ABORT SEPARATION

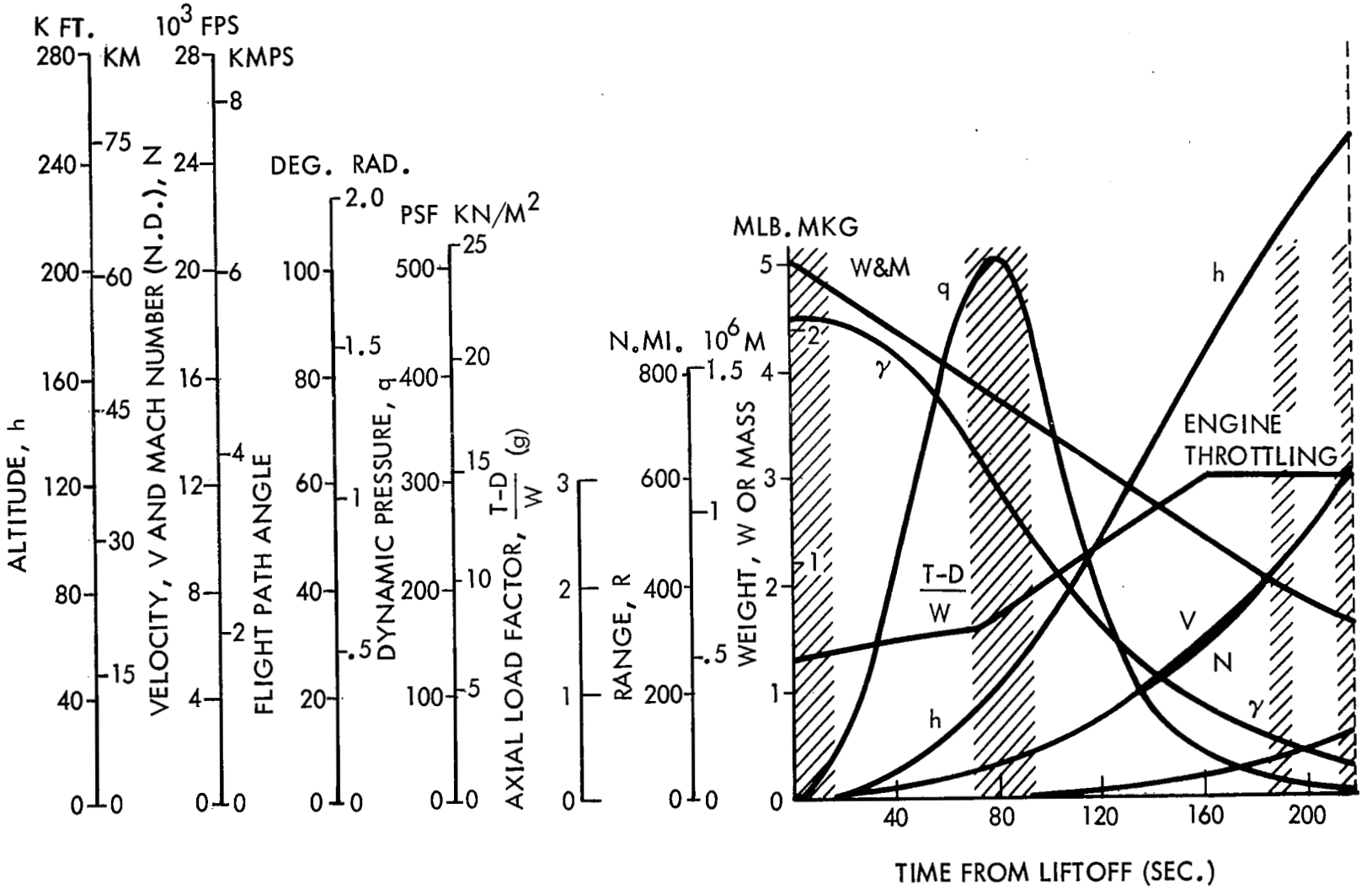

INCORPORATION OF AERODYNAMIC INTERFERENCE EFFECTS

Perhaps the most extensive task was the incorporation of detailed interference aerodynamics obtained from tests run by Convair Aerospace in August 1970 (Ref. 8) and by NASA/MSC in January 1971. This figure presents the data obtained in graphic form and requires some explanation. Both tests were run with a delta-winged orbiter and a delta-winged booster; however, these used different models and were conducted in different wind tunnels. Neither test was representative of the current baseline configuration.

The Convair Aerospace test (left half of figure) collected appreciable data for only one Mach condition (1.6) and only in the pitch plane. For given angles of attack for the booster and orbiter (pairs α_B α_O on upper left in figure), the sting-mounted booster model was maneuvered in the proximity of the fixed-sting orbiter model while data was continuously being collected. The trajectories (or "traverses," as they were called) were run parallel to the orbiter's longitudinal body axis at preselected vertical displacements normal to its longitudinal axis (lower left of figure). Vertical displacement ranged from the mated position (at closest approach) to 0.25 booster body length. Longitudinal displacements ranged from 0.3 booster body length forward (booster ahead) to 0.7 booster body length aft. Although the region of interest was booster ahead, tunnel limitations prevented better coverage.

In contrast, the MSC test (right half of figure) collected data in both pitch and yaw planes for Mach 0.6, 0.9, 1.1, and 1.4. In this test, the procedure was reversed. For a given location in proximity of the booster (pairs X/ℓ_B, Z/ℓ_B on the lower right figure) and a given angle of attack of the booster, the orbiter angle of attack was continuously swept (while data was being recorded) through ±10 deg. (upper right of figure). This was done for booster angles of attack of -5, 0, and +4 deg. and at 15 selected points in the proximity. These runs constituted the majority of the test and were made at zero angle of sideslip for both models. The test was then repeated for an angle of sideslip of +5 deg. on the booster while the orbiter was swept through ±6 deg. This beta test was run at zero angle of attack for both models. As in the Convair Aerospace test, the region of interest (booster ahead) obtained rather limited coverage.

INCORPORATION OF AERODYNAMIC INTERFERENCE EFFECTS

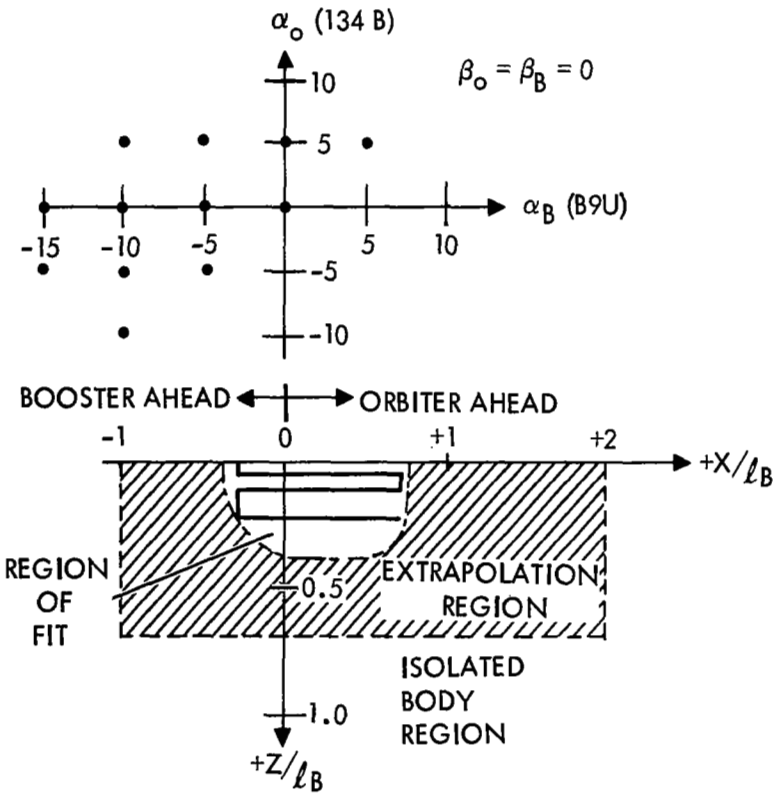

CONVAIR TEST 304, AUG. 1970
DELTA/DELTA CONFIGURATIONS
MACH 1.6

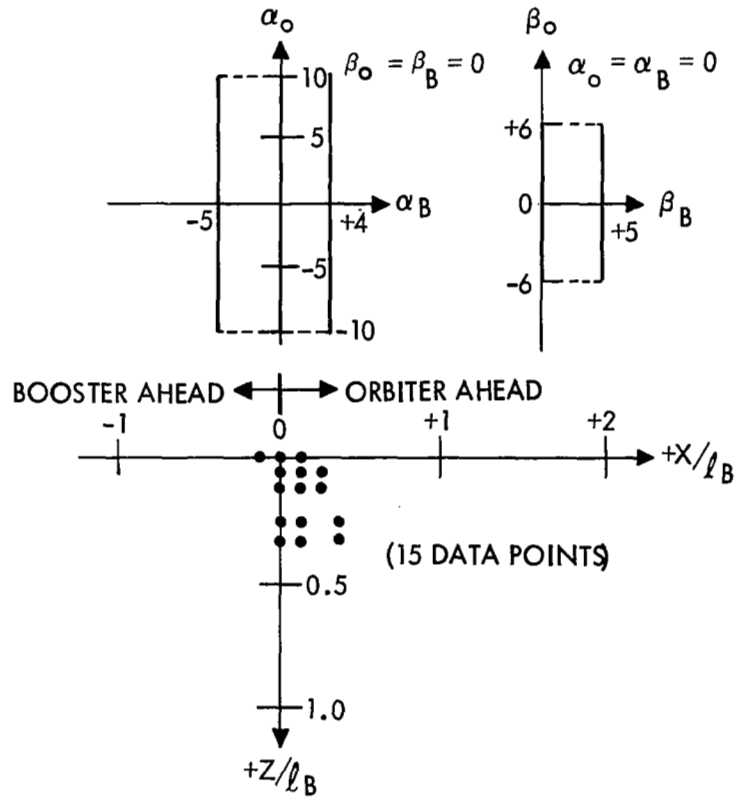

NASA/MSC TEST 401 JAN, 1971
DELTA/DELTA CONFIGURATIONS
MACH 0.6, 0.9, 1.1 AND 1.4

NOTE: FOLLOWING ABORT SEPARATION THE BOOSTER MOVES AHEAD (REGION OF LEAST DATA)

INTERFERENCE EFFECT ON PITCH MOMENT MULTIPLIER

The aerodynamic interference effects were derived from this data and were then fit using an existing polynominal fitter and computer graphics. Use of computer graphics allowed human interaction in the decision process, thereby avoiding the pitfalls of relying solely on analytical measures (such as "least squares" rms value). Since the data is primarily trigonometric rather than polynomial in form, distinct compromises were made in order to use the polynomial fitter. This figure presents a portion of the sweep data from Convair Aerospace Test 304 and illustrates the trigonometric form. The figure is also indicative of the large data range; here the pitch moment multiplier varies between +1.35 and -0.61 (i.e., between +35% and -161%.

The select polynominal fits were generally poor; however, every effort was made to ensure that the resulting fits were conservative so that conclusions arising from this study would not change adversely when more comprehensive data and better fits became available. It should however be noted that data obtained from these tests is of unusually good quality. The difficulties fitting the data arose principally from the sparsity of data and data coverage, and from the use of the simple polynomial fitter.

INTERFERENCE EFFECT ON PITCH MOMENT MULTIPLIER

$$K_{m_B} = (C_{m_B})_{measured} / (C_{m_B})_{isolated\ body}$$

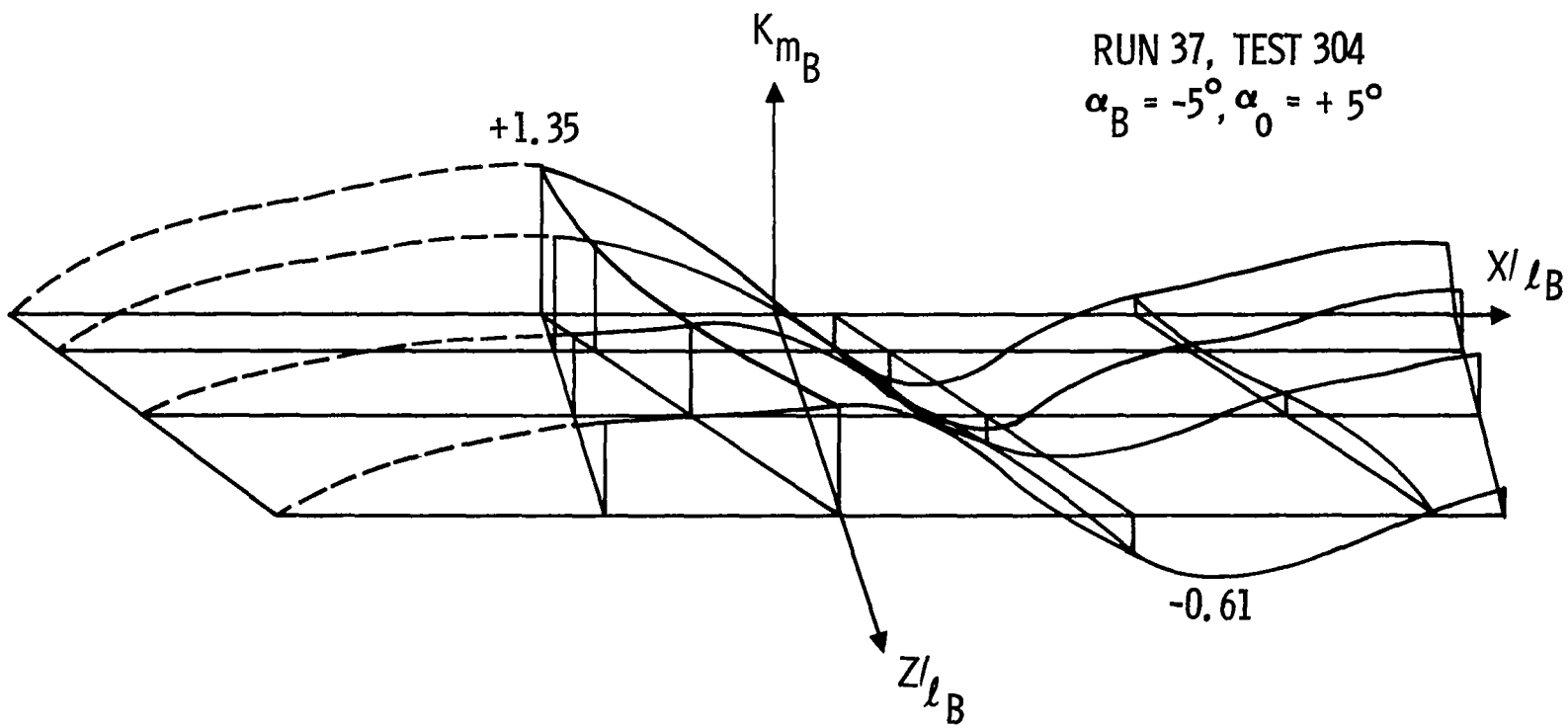

STAGE SEPARATION SYSTEM DESCRIPTION

A common feature of all separation systems, regardless of concept, is the interstage attachment structure to support the orbiter. This structure must hold the orbiter securely and rigidly during ascent from liftoff through staging. Longitudinally, the orbiter experiences a maximum of 3g during ascent.

Large lift loads due principally to the angle of attack of the wings are transferred through the interstage attachment structure and distributed (through frames, stiffeners, etc.) into each vehicle. Although not as large, aerodynamic side loads must also be reacted. In addition, the structure must be sufficiently rigid to prevent control system and/or aeroelastic interaction. These considerations dictate that the attachments be heavy structure.

Early in the study, it became apparent that the aerodynamic/inertia loads occurring during mated flight required heavy fittings, frames, and longerons in both booster and orbiter. Since the structural attachment has to be broken during separation, there is a strong interface between the attachment structure components and the separation system.

The highest load occurs at maximum longitudinal acceleration of the booster. This load could be taken at either the forward or the aft attachment. Because the orbiter is six times more sensitive to weight growth than the booster, however, it is lighter to transfer this load at the forward attach point since it is close to the liquid oxygen tank (and hence the cg) of the orbiter.

The main axial load (orbiter mass times 3g) is reacted in the forward attachment structure between the hydrogen and oxygen tank to simplify the tank design and minimize weight. The internal bulkheads are quite deep to handle the kick load and the attachment fittings are axially spread to transfer the high axial load to the booster structural skins.

SEPARATION SYSTEM FORWARD AXIAL LINK ATTACHMENTS

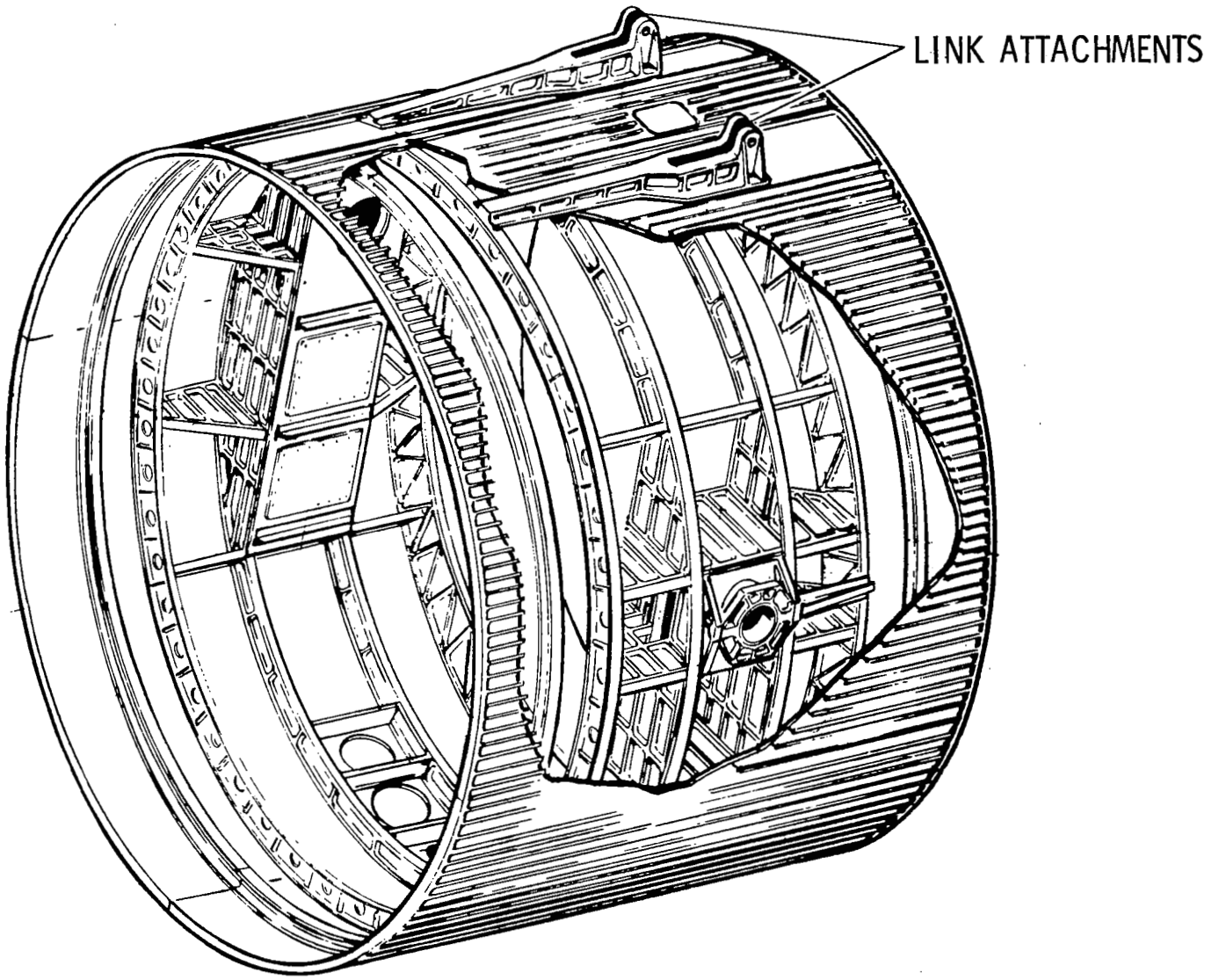

SEPARATION SYSTEM FORWARD VERTICAL LINK ATTACHMENTS

The maximum load normal to the waterline of the vehicles was tension at the front attachment. Shown here is the internal and external structure required in the LO_2 tank to react this load requirement.

SEPARATION SYSTEM FORWARD VERTICAL LINK ATTACHMENTS

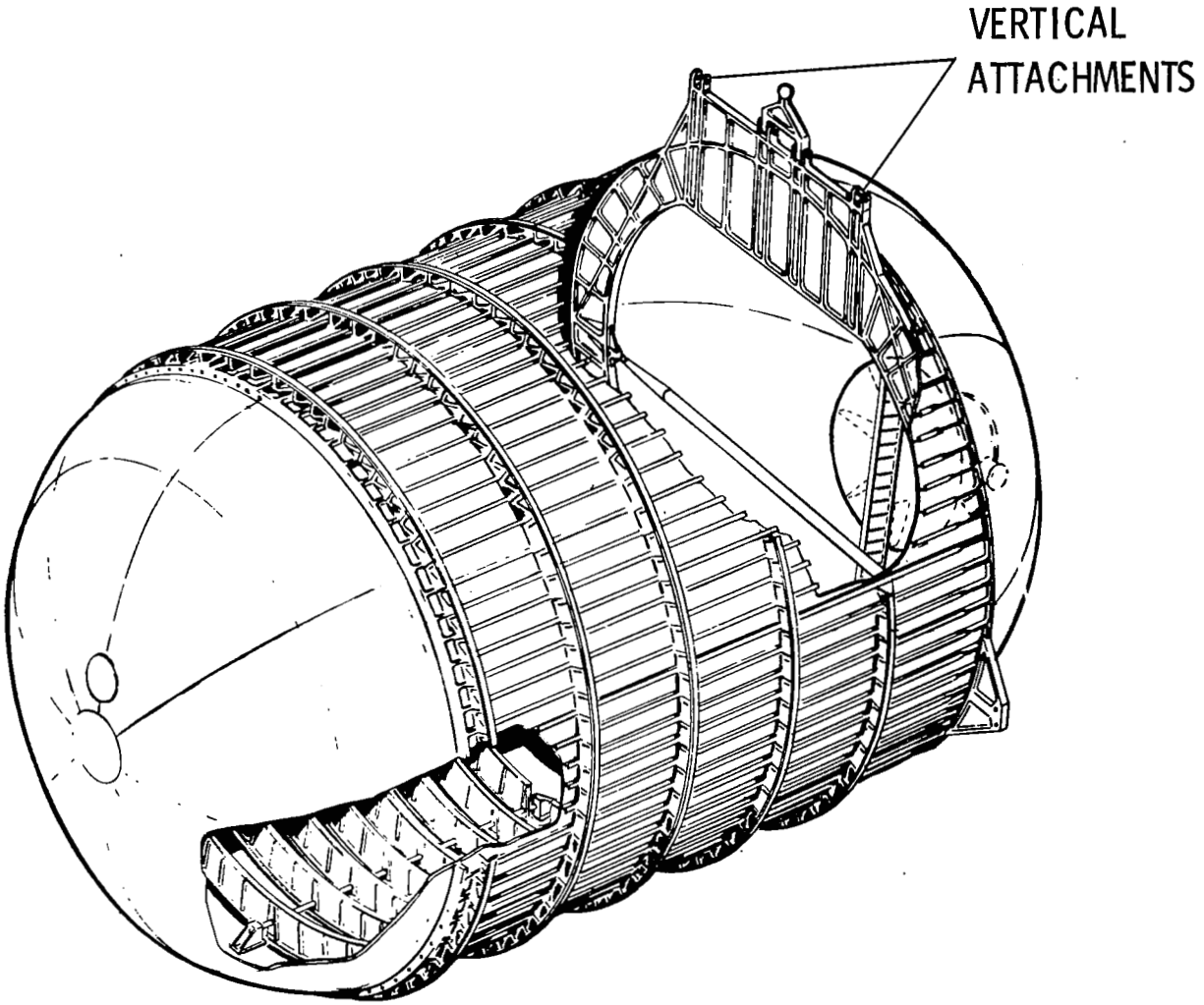

1325

SEPARATION SYSTEM AFT LINK ATTACHMENTS

The aft attachment was determined by the best location compatible with the orbiter location – the forward logical position was between tanks – but here we must facilitate the orbiter. Shown are the bulkheads required to react both the vertical load during ascent and the separation load during normal staging.

SEPARATION SYSTEM AFT LINK ATTACHMENTS

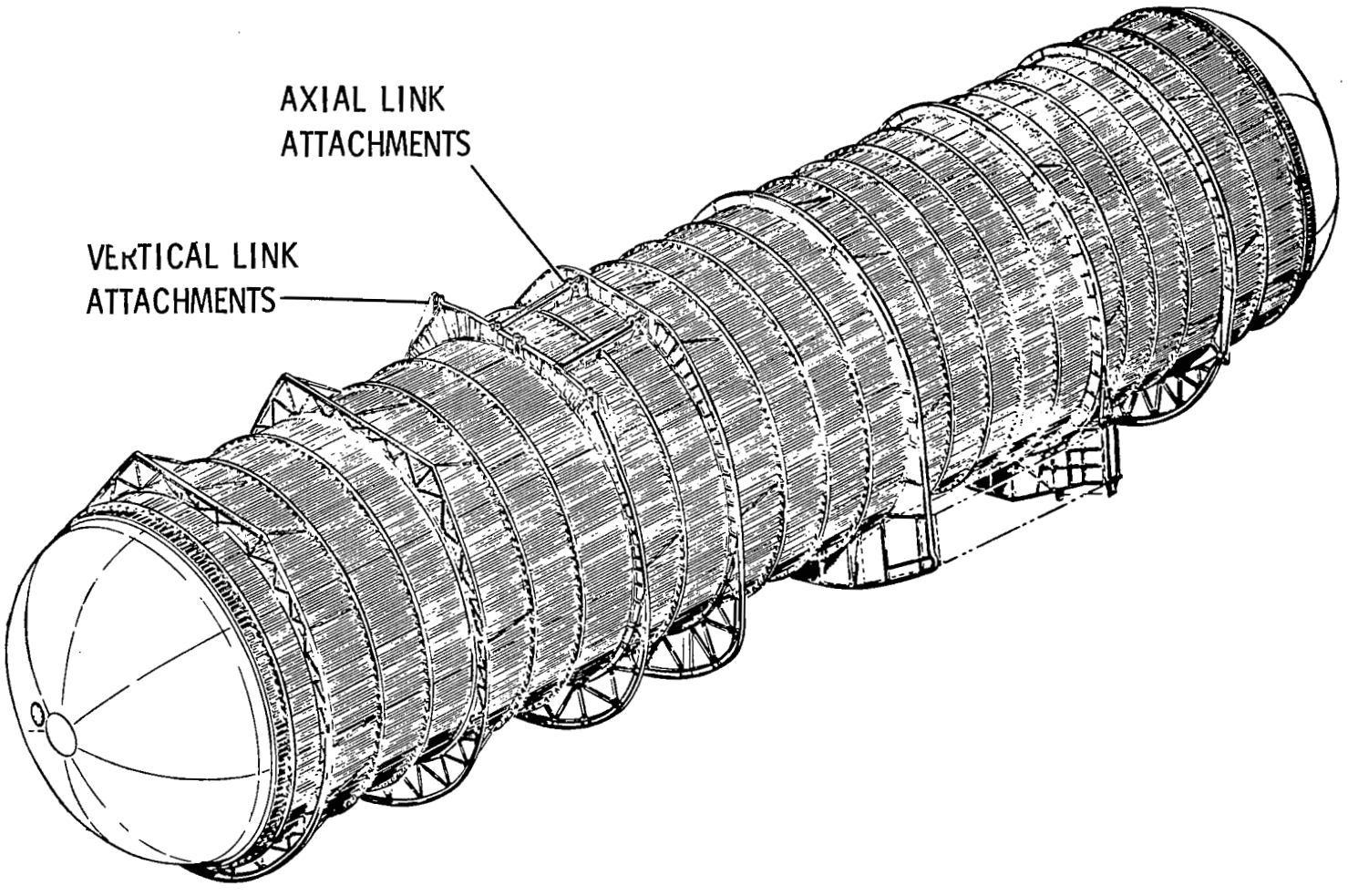

FORWARD AND AFT SEPARATION LINKS

The mating/separation system general arrangement consists of sets of vertical, side, and drag links located forward and aft. The links are designed to react all flight loads and are configured to provide the mechanics for separating the orbiter from the booster.

Separation is accomplished by using the booster thrust to accelerate the orbiter transversely. The forces for transverse acceleration are transmitted through rotating drag links located at the forward and aft attach points.

FORWARD AND AFT SEPARATION LINKS

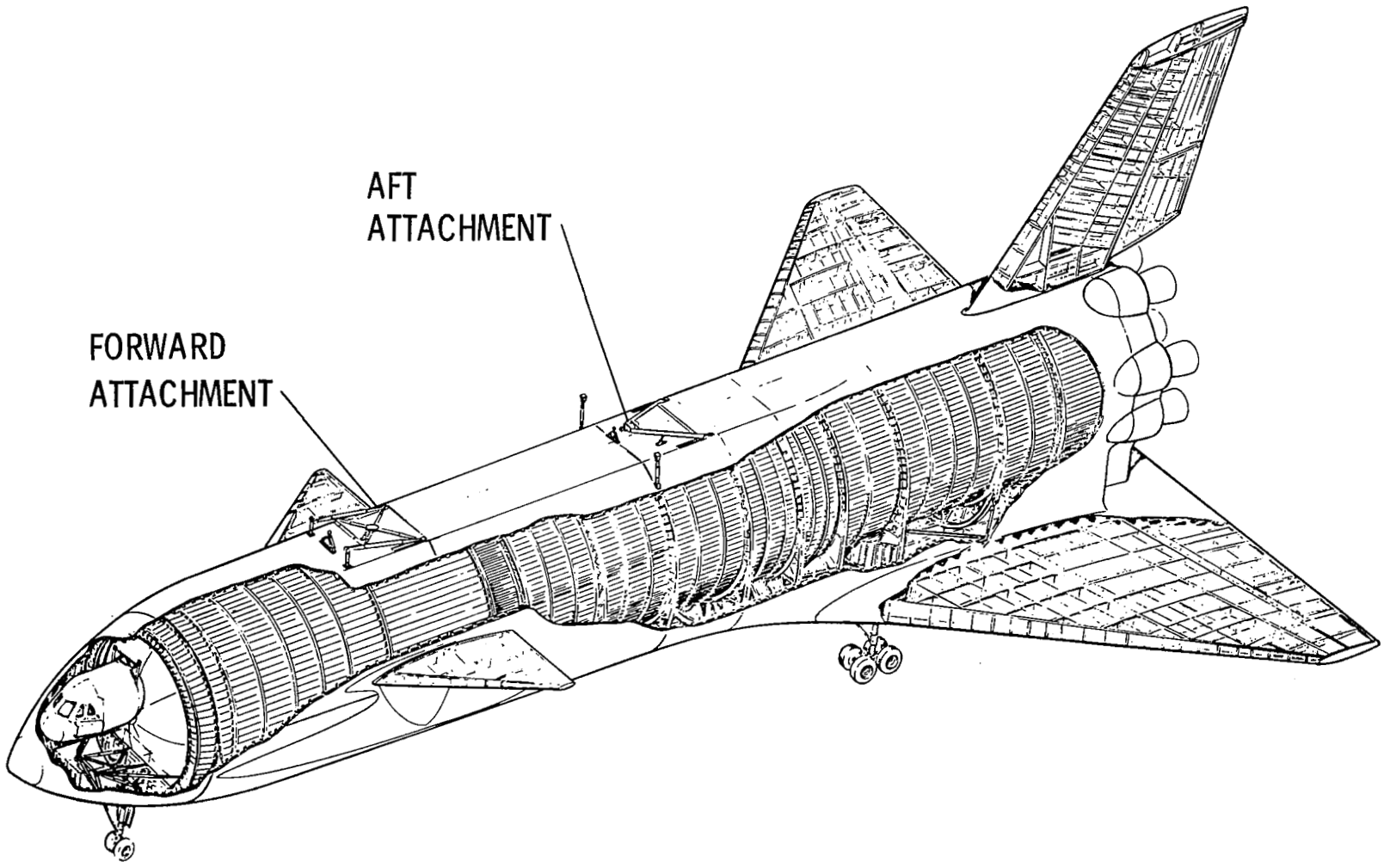

FORWARD LINK ARRANGEMENT

The forward attachments consist of: (1) Frame A, which reacts the total axial load in the mated configuration, reacts side loads, and imparts a transverse acceleration force to the orbiter as it rotates aft during the separation sequence; (2) Link B, which reacts the vertical loads during ascent, a portion of the roll moment, and the vertical component of the axial load; and (3) Fitting C, which reacts side loads during ascent.

Frame A and Link B are pin-jointed. A spherical end located on Fitting C at the centerline of the vehicle fits into a bored hole in the bottom of the orbiter. During ascent, side loads are carried through this fitting directly from the orbiter bulkhead to the booster bulkhead. The spherical end, in conjunction with the fitting pin-jointed to the booster, accommodates misalignments and relative motion between the booster and orbiter.

Spherical bearings at the pin joints of the bulkhead attachments provide the adjustment required to facilitate installation of the links during the mating operation and to compensate for structural deflections during mated flight. Snubber/retractor actuators snub the rotating links after separation has been achieved and retract them to a stowed position.

FORWARD LINK ARRANGEMENT

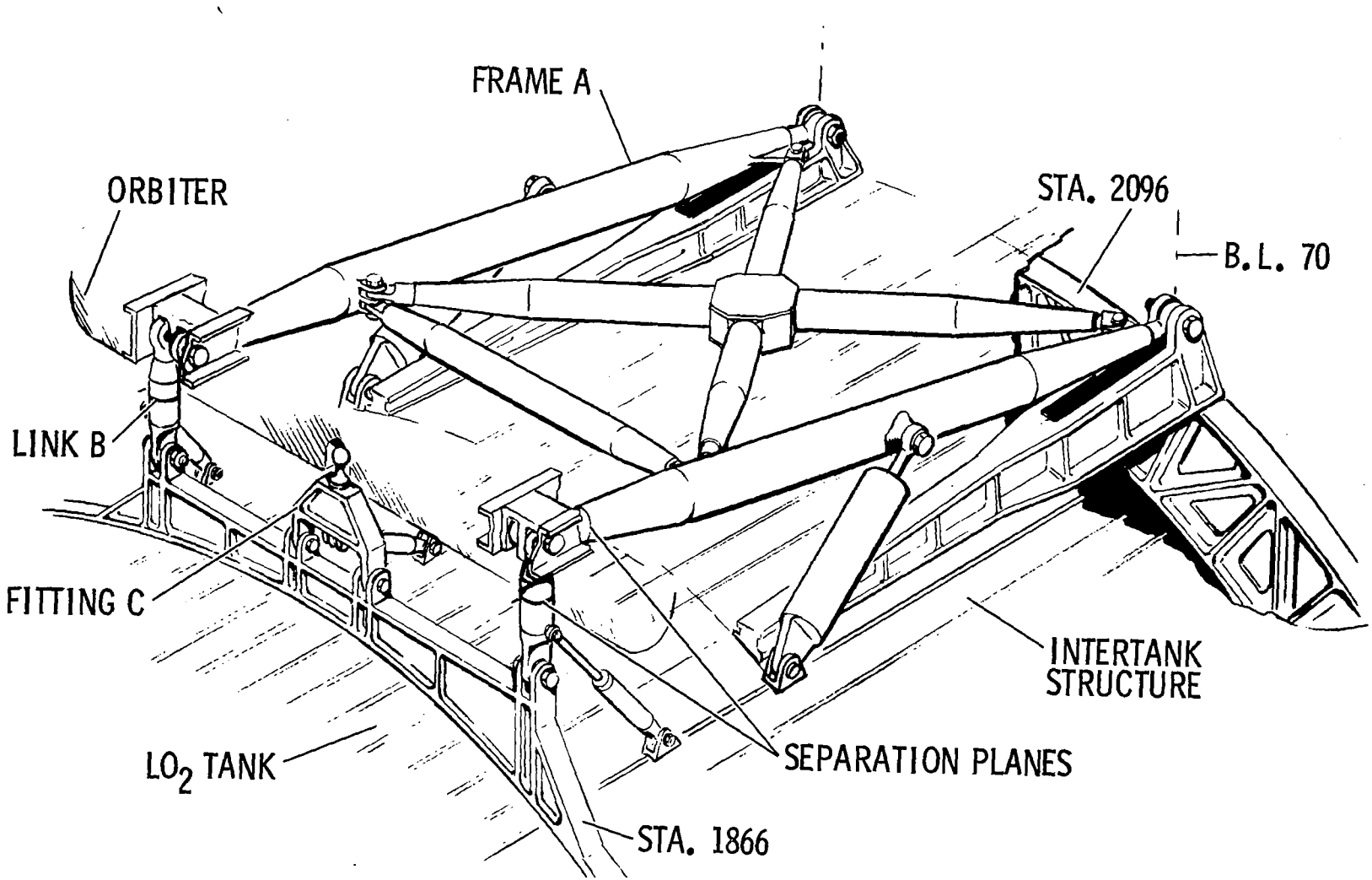

AFT LINK ARRANGEMENT

Aft attachments consist of: (1) Link D, which reacts vertical loads and a portion of the roll moment during ascent; (2) Frame E, which reacts side loads and axial loads as it guides the aft end of the orbiter during separation rotation; (3) Member F, which reacts side loads during ascent; and (4) Expansion Unit G, which accommodates forward/aft thermal expansion and precludes introducing axial loads into Frame E during mated flight. Member D and Frame E are pin-jointed to accommodate differential movement between orbiter and booster due to thermal expansion.

AFT LINK ARRANGEMENT

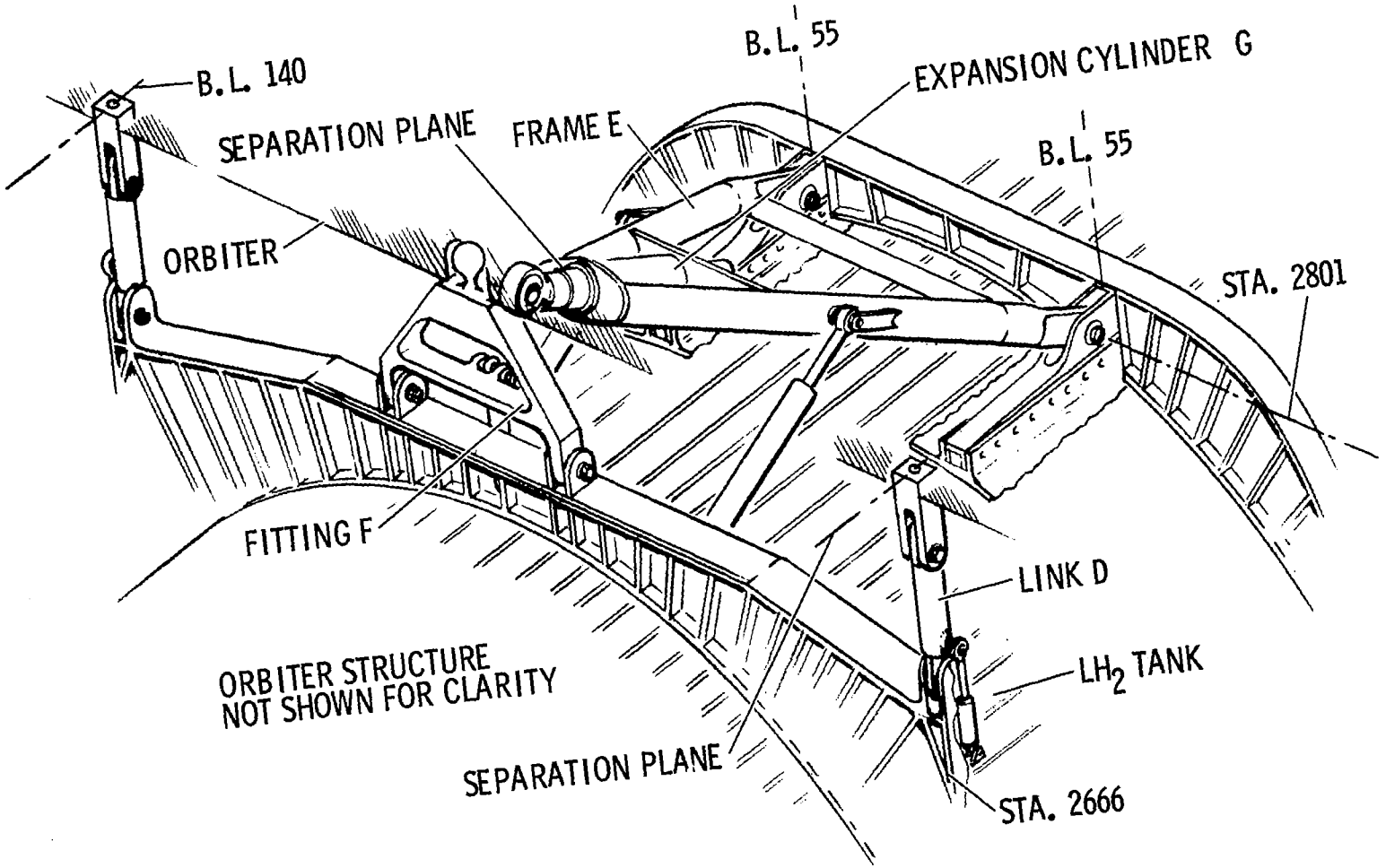

TYPICAL PYROTECHNIC BOLT ARRANGEMENT

Pyrotechnic bolts are used at the vertical connections and between the orbiter and rotating link for separating the orbiter from the booster. These low-shock, energy-absorbing pyrotechnic separation bolts are quite similar to those used on the LEM. The two bolt initiators receive an electrical impulse from the orbiter and/or the booster. All initiators are supplied from independent power sources. When the main charges on each end of the bolt are ignited, the pressure moves the pistons and compresses the rubber, causing a shear failure in a 45-deg. plane on the annular outside diameter at the center of the bolt, creating separation. Redundancy is achieved by providing dual pistons, four main charges, and four initiators. Housings on the attach fittings contain any loose pieces.

TYPICAL PYROTECHNIC BOLT ARRANGEMENT

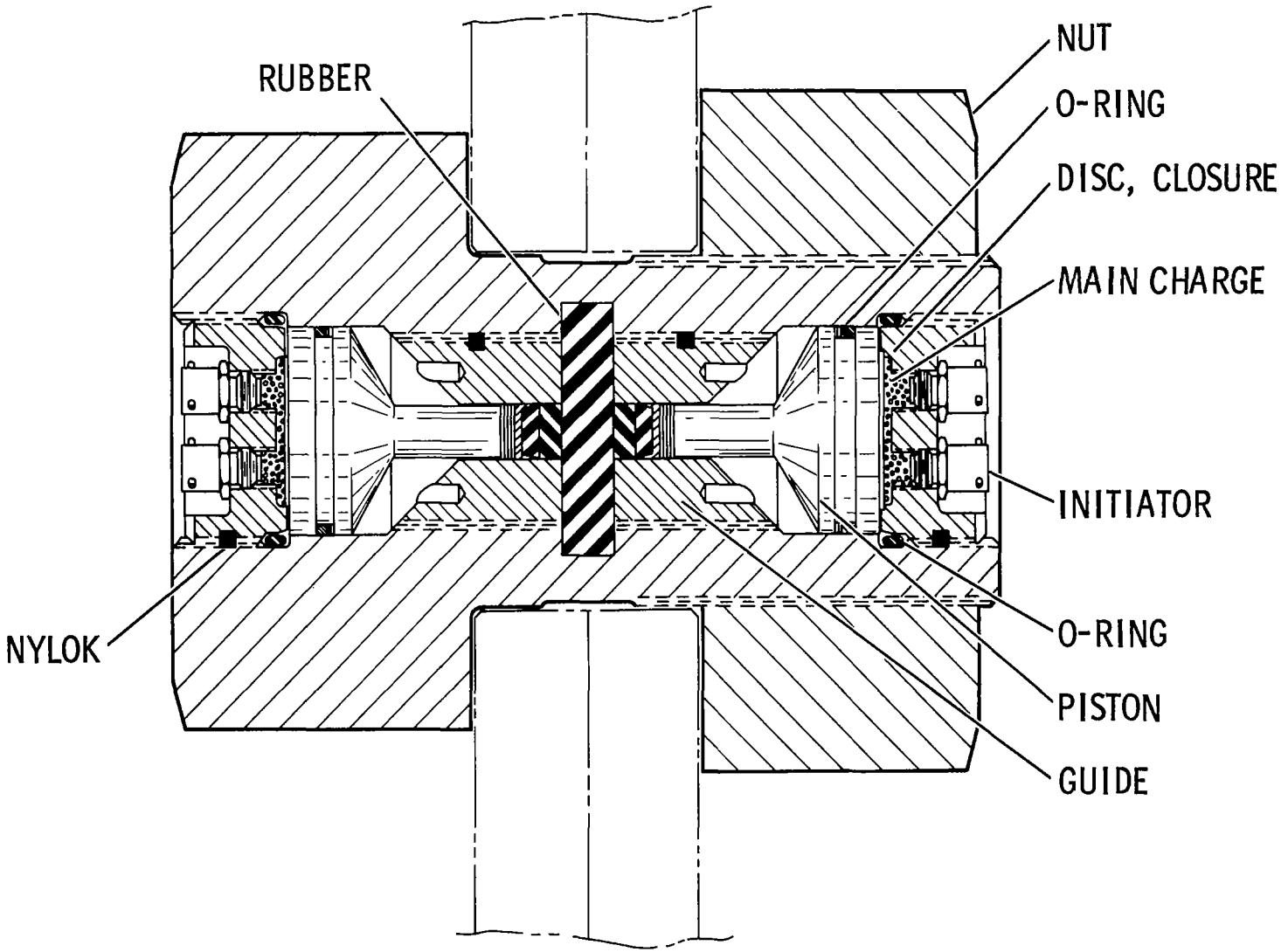

SEPARATION SEQUENCE

The figure shows booster and orbiter sequencing, illustrating the release of the disconnects for normal staging. A signal from the booster propellant depletion sensors initiates throttling of the booster engines to 50% thrust and, concurrently, starts the orbiter engines and brings them to 50% thrust. When the orbiter engines have reached 50% thrust, pyrotechnic bolts on the four vertical members are fired, releasing the vertical restraint of the orbiter. At the same time, the expansion unit in the aft rotating frame is actuated, locking the frame to the orbiter; 0.10 second later, the booster engines are shut off. Axial aft forces acting on the orbiter due to the greater booster thrust rotates the links aft, providing a transverse acceleration to the orbiter. After a 0.50-second time delay, the pyrotechnic bolts restraining the orbiter to the rotating links are fired, freeing the orbiter from the booster. Immediately upon orbiter release, the snubber/retractor actuators are activated and the rotating links are returned and locked into their stowed positions.

SEPARATION SEQUENCE

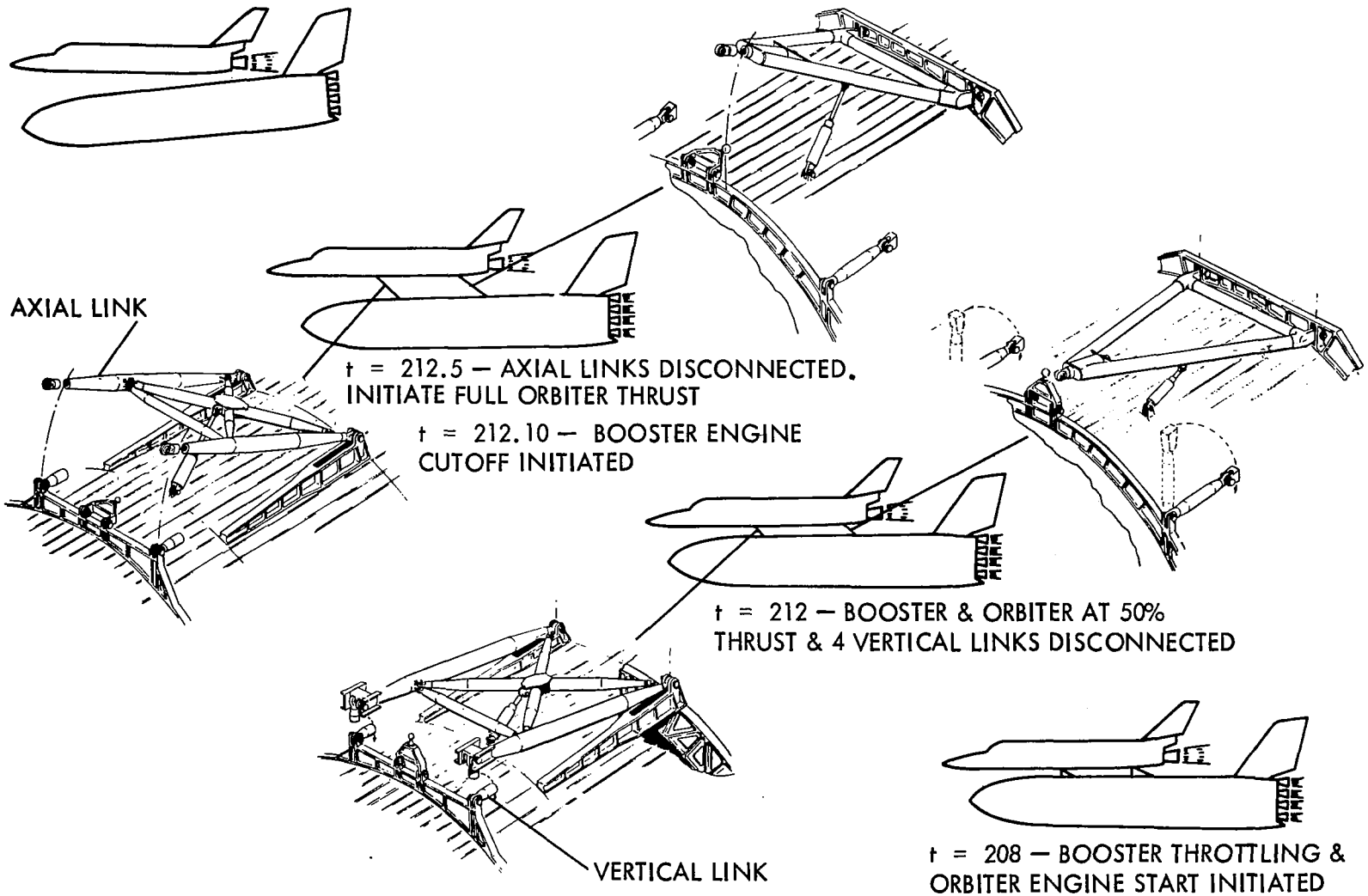

SEPARATION SUBSYSTEM FUNCTIONAL SCHEMATIC

The separation subsystem functional schematic is shown to illustrate the reliability and control interface associated in the separation system sequence. The controller initiates the separation sequence from the LO_2 depletion signal. Redundancy for orbiter and booster separation is ensured by dual separation controllers and subsystems and individual separation bolt planes in both orbiter and booster.

SEPARATION SUBSYSTEM FUNCTIONAL SCHEMATIC

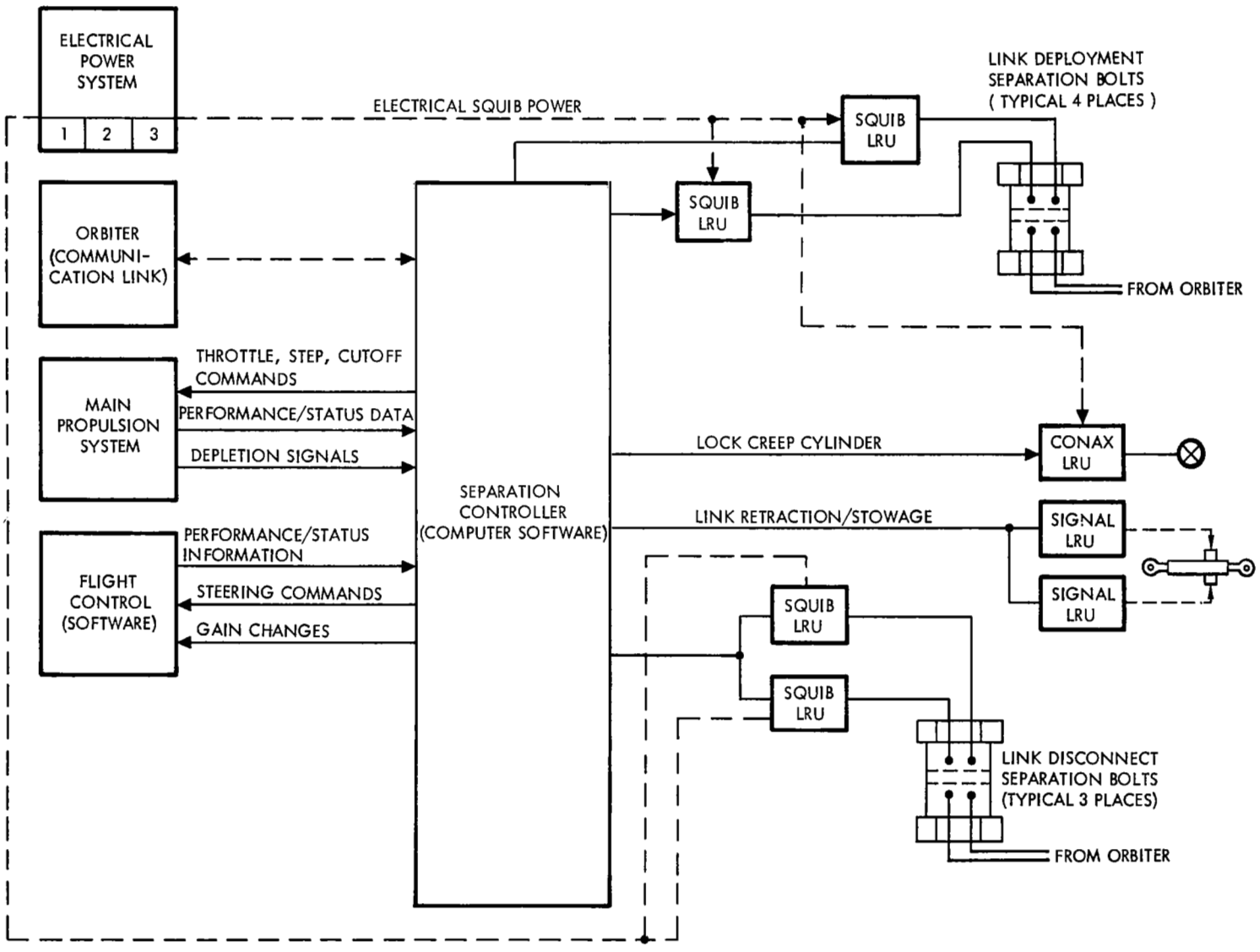

LIQUID OXYGEN DEPLETION SUBSYSTEM

It is at normal staging (and only there) that the booster engines are cut off before separation is complete. An understanding of the booster propellant-depletion system is necessary to an understanding of the separation sequence.

The booster is designed to go into LO_2 depletion 98.4% of the time. The design approach is dictated by the much higher density of LO_2 as compared to LH_2 (about 16 to 1). LH_2 depletion sensors provide a backup to prevent LH_2 starvation; i.e., the LH_2 depletion sensors start the separation sequence 1.6% of the time. Both sensors are wet-dry indicators with response times on the order of one millisecond. A discussion of the LO_2 depletion subsystem will suffice to describe them both.

This figure illustrates the operation of the LH_2 depletion subsystem from the point of initial breakthrough through thrust termination. The depletion or "shutdown commit" sensors are located in the supply ducts sufficiently downstream to allow settling of the two-phase layer developed during breakthrough. These same sensors initiate the stage separation sequence and must be located sufficiently upstream to allow time to start the orbiter engines before separation. As now envisioned, each of four supply ducts will contain a five-element vertically oriented rake and associated remote electronics. Each element will give a "Wet" indication when covered and a "Dry" indication together with a Time Code indication at the instant they become uncovered. The individual response from each element will provide an accurate prediction of the true point of depletion, enabling compensation if required (adaptability – a reliability consideration). The predominate failure mode of the sensors is Wet; by voting, any two Dry indications together with any two lines will initiate the separation sequence and controlled shutdown. If necessary (e.g., orbiter engines Ignition Complete signal delay), the engines can thrust to LO_2 starvation without jeopardizing the mission or vehicle; however, the engines may have to undergo overhaul upon vehicle recovery.

LIQUID OXYGEN DEPLETION SUBSYSTEM

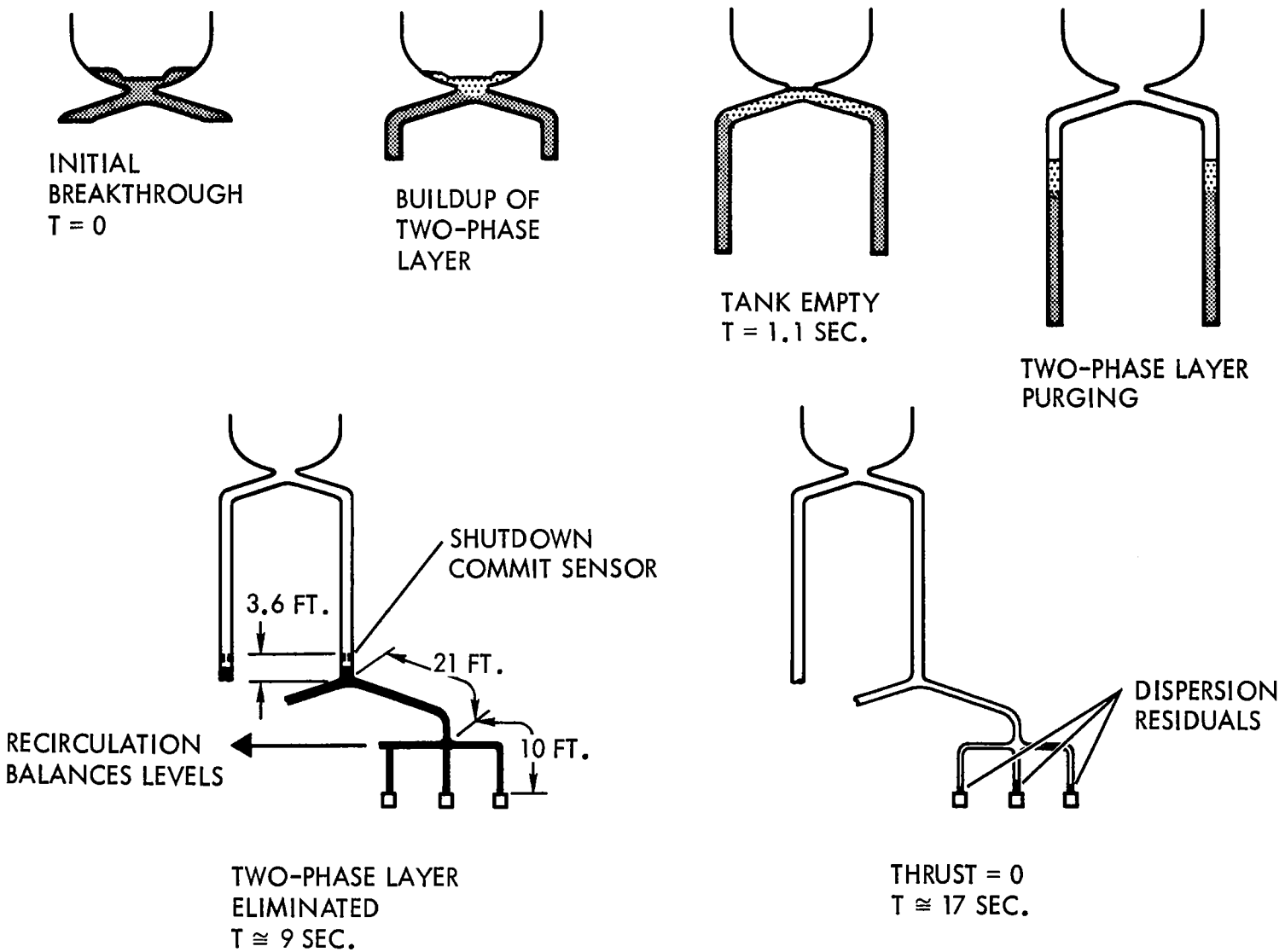

NORMAL STAGING SEQUENCING, TWO ORBITER ENGINES

The normal staging booster and orbiter thrust sequencing is shown. The separation sequence is initiated at 208.5 seconds by a signal from the propellant depletion system. At this time, the booster staircase steps to 50% thrust (minimum power level, MPL) as the orbiter engines are ignited and build up thrust. At 210.5 seconds, an Ignition Complete signal is received from the two orbiter engines. The booster reaches MPL (50% thrust) at 211.5 seconds and is held until BECO. The orbiter engines have been accelerating to MPL (50%) and hold at 212 seconds. Motion of the links is now initiated by activation of the pyrotechnic separation bolts on all four of the vertical attachment members and the orbiter is held at MPL (50%) until 212.5 seconds. The orbiter is held at this plateau to allow equalization of engine thrust at separation to minimize the following.

THRUST CONTROL EFFECTS – While there is motion on the links and without equallizing dwell, the thrust differential could be 100%. This would certainly tend to increase the plume pressure across the vertical stabilizer, which would introduce roll of the booster and additional side loads during separation.

PLUME IMPINGEMENT – The plateau at orbiter MPL thrust reduces the time of exposure of the vertical stabilizer at 100% orbiter thrust by 50%. To remove this plateau would definitely result in a weight increase, as the leading edge of the vertical stabilizer is designed by normal staging.

TRAJECTORY DEGRADATION – The differential in actual and assumed orbiter thrust without the dwell would have considerable effect on the orbiter trajectory as shown in the engine ICD: 50% thrust can be achieved in 2.4 to 4.4 seconds; 100% thrust can be achieved in 3.2 to 4.9 seconds. The effect would be especially felt with only one orbiter engine operative. Presently, the trajectories for one and two engines are quite similar and acceptable but because of the tolerance band the sequence for both would have to be different. They are currently identical except for removal of the 0.5-sec. dwell.

At 212.1 seconds, BECO occurs and at 212.5 seconds the vehicles are separated by a signal to the three remaining separation bolts in the axial links. The orbiter then accelerates to 100% thrust (normal power level or NPL) and holds to achieve maximum clearance and minimize coast. By 213.5 seconds, booster thrust is essentially zero.

NORMAL STAGING SEQUENCING, TWO ORBITER ENGINES

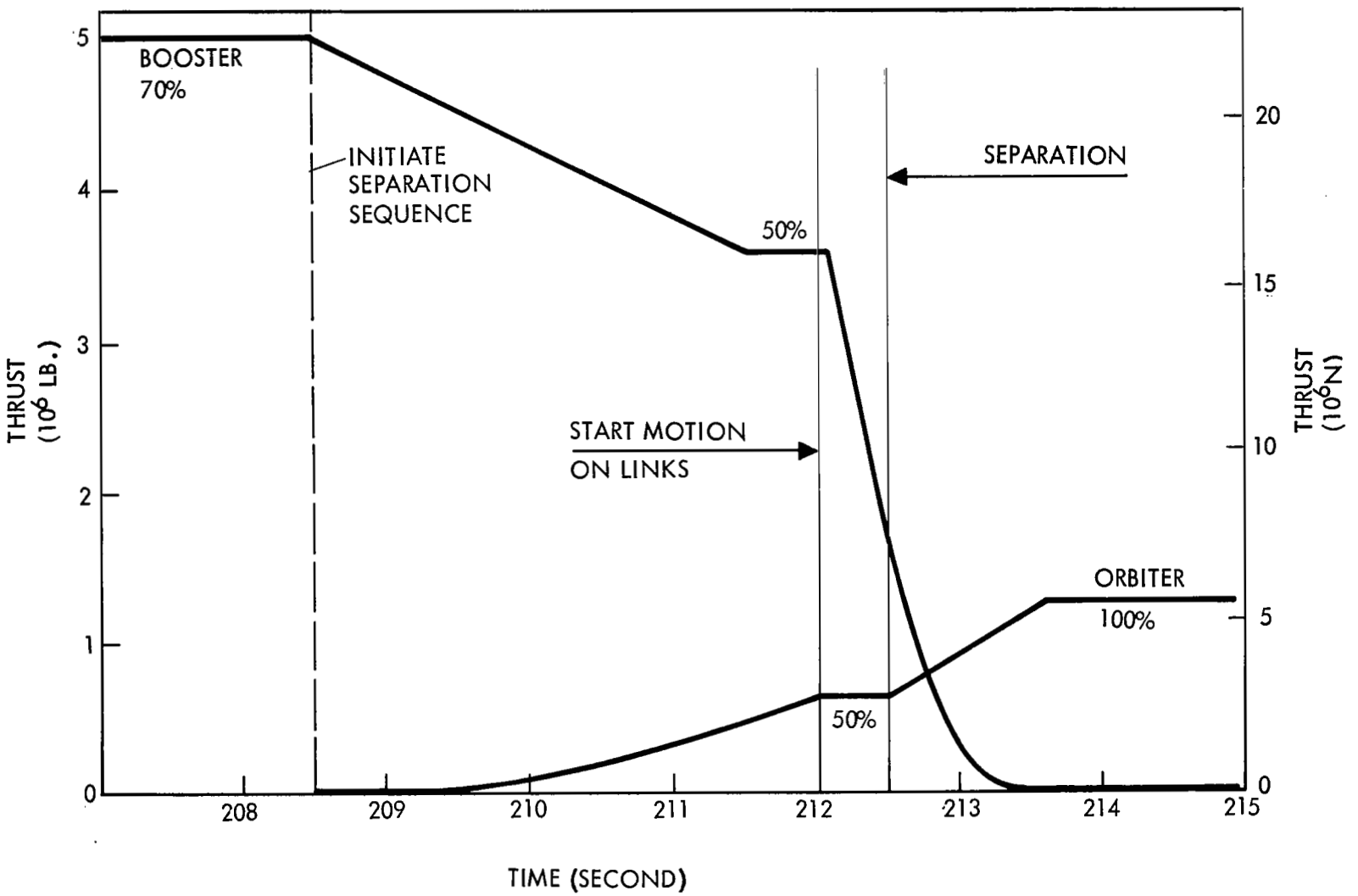

ABORT SEPARATION CAPABILITY, AN ASSESSMENT

Specific tasks associated with the abort trade studies as they related to the separation system were:

1. Determine the capability of the baseline linkage system for immediate stage separation at any time during mated ascent. Define limitations and constraints.
2. Determine the capability of both the booster and orbiter to maintain control and limit environmental loads to a safe level following immediate stage separation.
3. Determine the capability to immediately separate under conditions of loss of booster thrust including the (highly unlikely) total loss of booster thrust. Assess warning time, thrust decay characteristics, and desirability of immediate separation.
4. Determine the capability of the baseline linkage system to provide stage separation and orbiter flyaway while the booster remains on the pad.
5. Define system modifications and weight penalties (if any) associated with providing immediate stage separation capability from pre-liftoff through normal staging.

This figure illustrates the five investigative regions: pad flyaway, post-liftoff, maximum q, pre-BECO, and BECO (booster engine cutoff). Shown on this figure are the achieved separation trajectories.

SEPARATION TRAJECTORY ENVELOPE

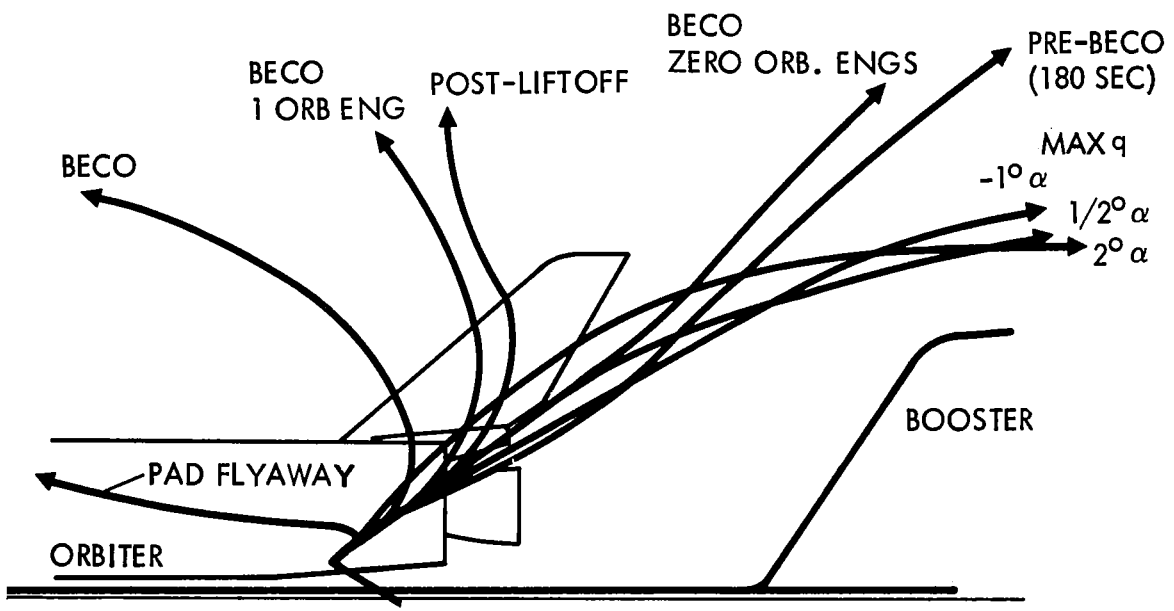

SEPARATION DISTANCE AT BECO WITH 1 OR 2 ORBITER ENGINES FUNCTIONING

Abort separation at normal staging is basically a condition where one or both orbiter engines are not functioning; this is generally not known until after the separation sequence has begun. For this purpose, the orbiter engine transmits a Ignition Complete signal to the Data Control Management (DCM) computer two seconds after the start of the separation sequence. This signal specifies that two, one, or zero orbiter engines have started; it occurs at 210.5 seconds. The figure shows the separation achieved when one or two orbiter engines are functioning, thereby creating maximum vehicle separation in the least amount of time. (This figure is in a coordinate frame fixed to the booster.)

SEPARATION DISTANCE AT BECO WITH 1 OR 2 ORBITER ENGINES FUNCTIONG

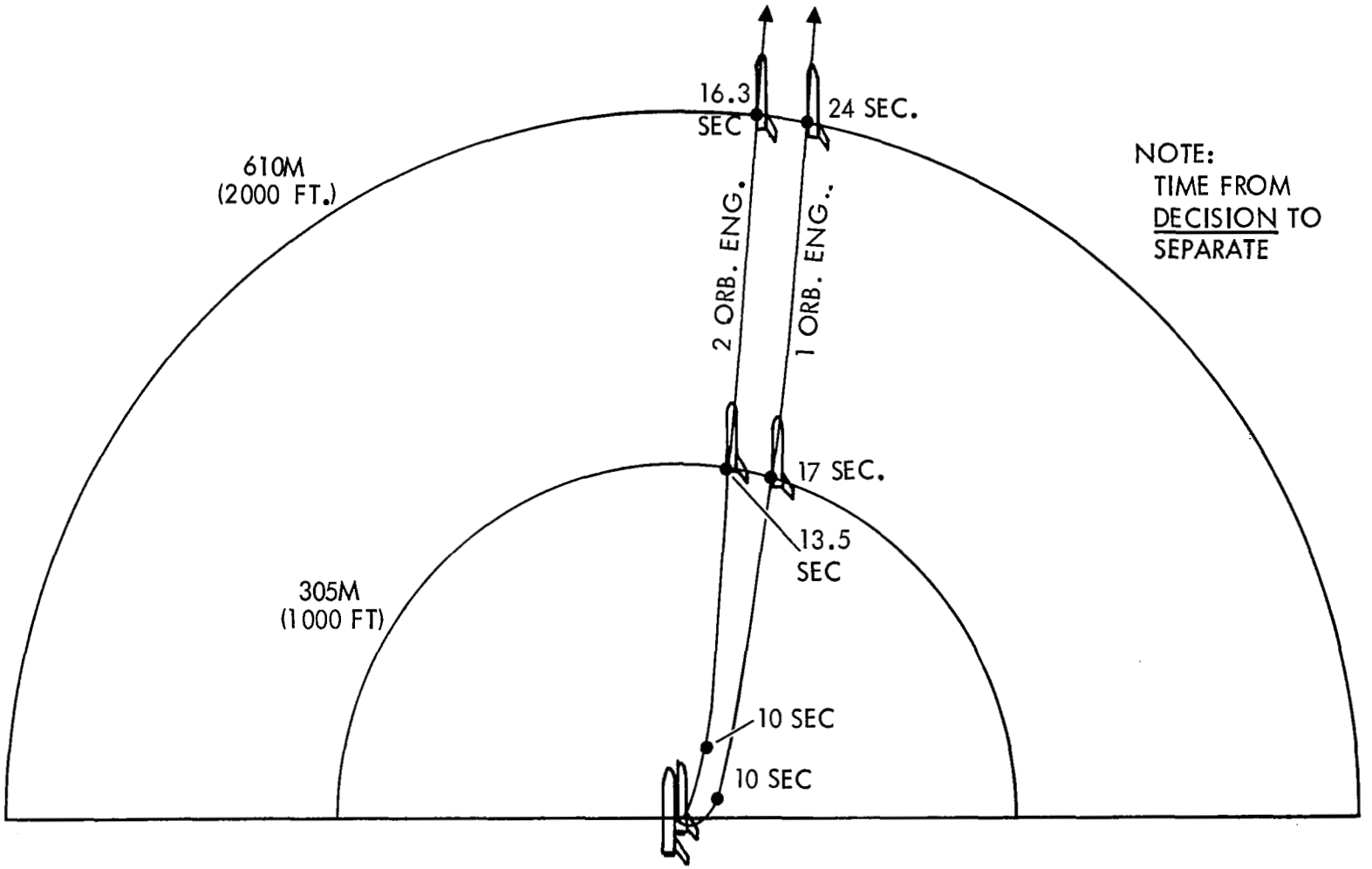

TRAJECTORIES AT BECO, ONE ORBITER ENGINE

The sequence and trajectory shown with one orbiter engine is similar to normal separation with one basic exception; the orbiter engine dwell for 0.5 second at 212.0 seconds is bypassed and the engine is accelerated to NPL (100% thrust). This produces a separation trajectory with maximum clearance similar to that for normal staging. The BECO tolerance band is shown at +0.03 second, with little effect on the trajectory.

The trajectory for one orbiter engine operation is shown both with and without the effect of the orbiter plume. As the engine moves aft and passes close to the booster vertical tail, a very large turning moment is created as the tail acts like a sail, causing the booster to heel over and build up large booster residual rates following disconnect. As shown the change in the vertical trajectory is minor but the booster residual roll rate has increased from a negligible value (for nominal separation) to more than 4.5 deg. per second. Although the booster ACPS is sized to handle these residual rates adequately, some slight additional propellant margin will be required to offset this condition.

TRAJECTORIES AT BECO, ONE ORBITER ENGINE

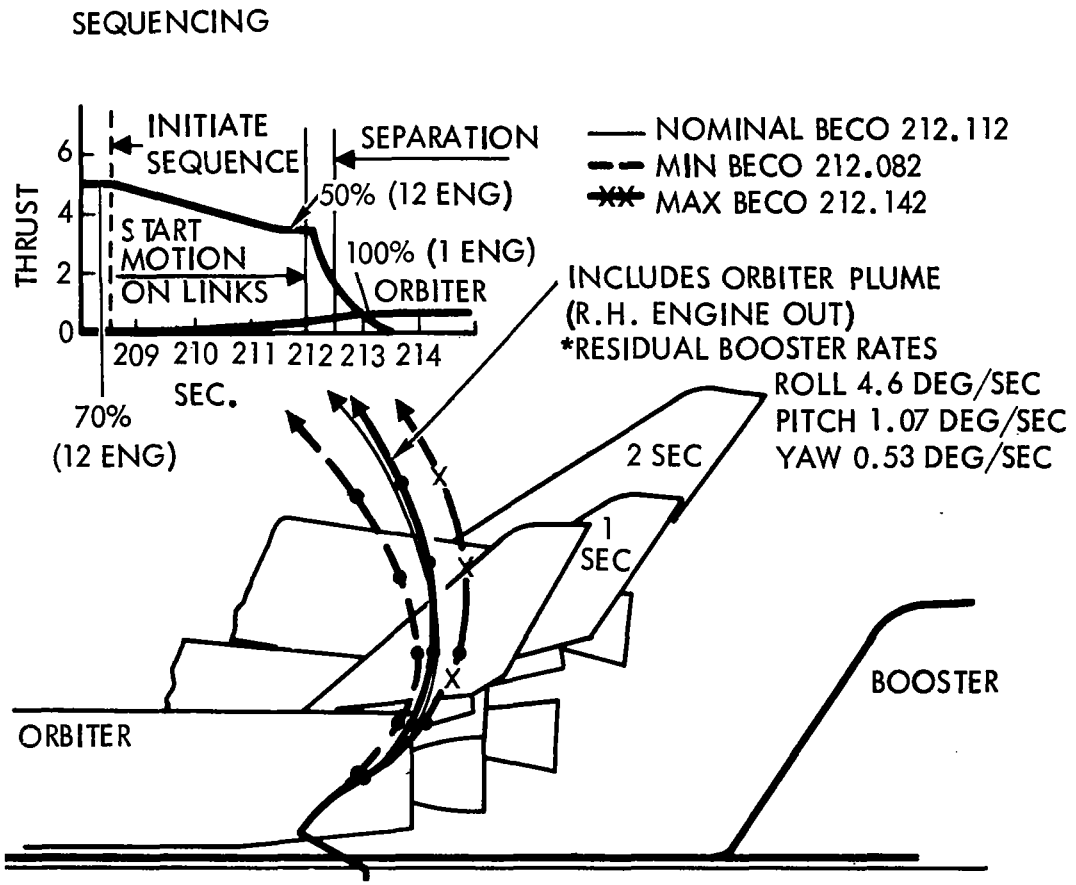

*HAND CALCULATED

PITCH RATE AND ATTITUDE AT BECO, ONE ORBITER ENGINE

The guidance command shown is identical to normal staging for the booster but is changed slightly for the orbiter at separation to aid separation clearance and minimize orbiter control system overshoots.

PITCH RATE & ATTITUDE AT BECO, ONE ORBITER ENGINE

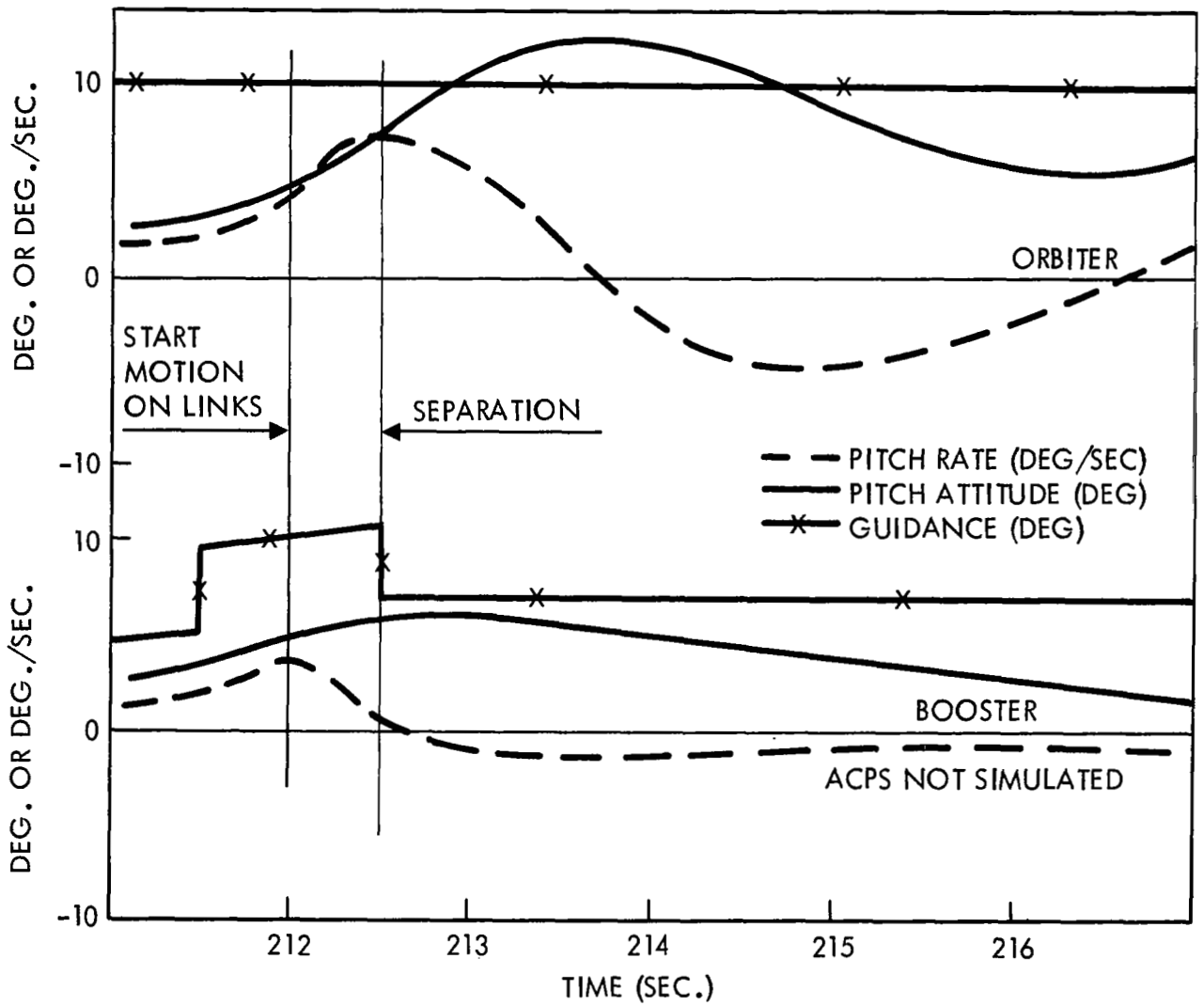

TRAJECTORIES AT BECO, ZERO ORBITER ENGINES

The two-orbiter-engine-out condition is shown. When the No Engines Operative signal is received from the orbiter at 210.5 seconds, four booster engines are automatically shut down, the remaining eight engines are stepped to MPL (50% thrust), and normal sequencing occurs. The trajectories for all conditions are shown with slight upward curvature; this is due to the controls and guidance introduced in the booster. Before start of motion on the links, the guidance is the same as normal, but at this point a hard-over, nose-up gimbal command is introduced into the booster engine control system. This command creates a pitch-up attitude in both vehicles and improves tail clearance. The booster then proceeds into normal recovery. The orbiter ignites its orbit maneuvering system (OMS) engines and further attempts ignition of its main propulsion engines. Failure to achieve main engine ignition will result in loss of the orbiter.

TRAJECTORIES AT BECO, ZERO ORBITER ENGINES

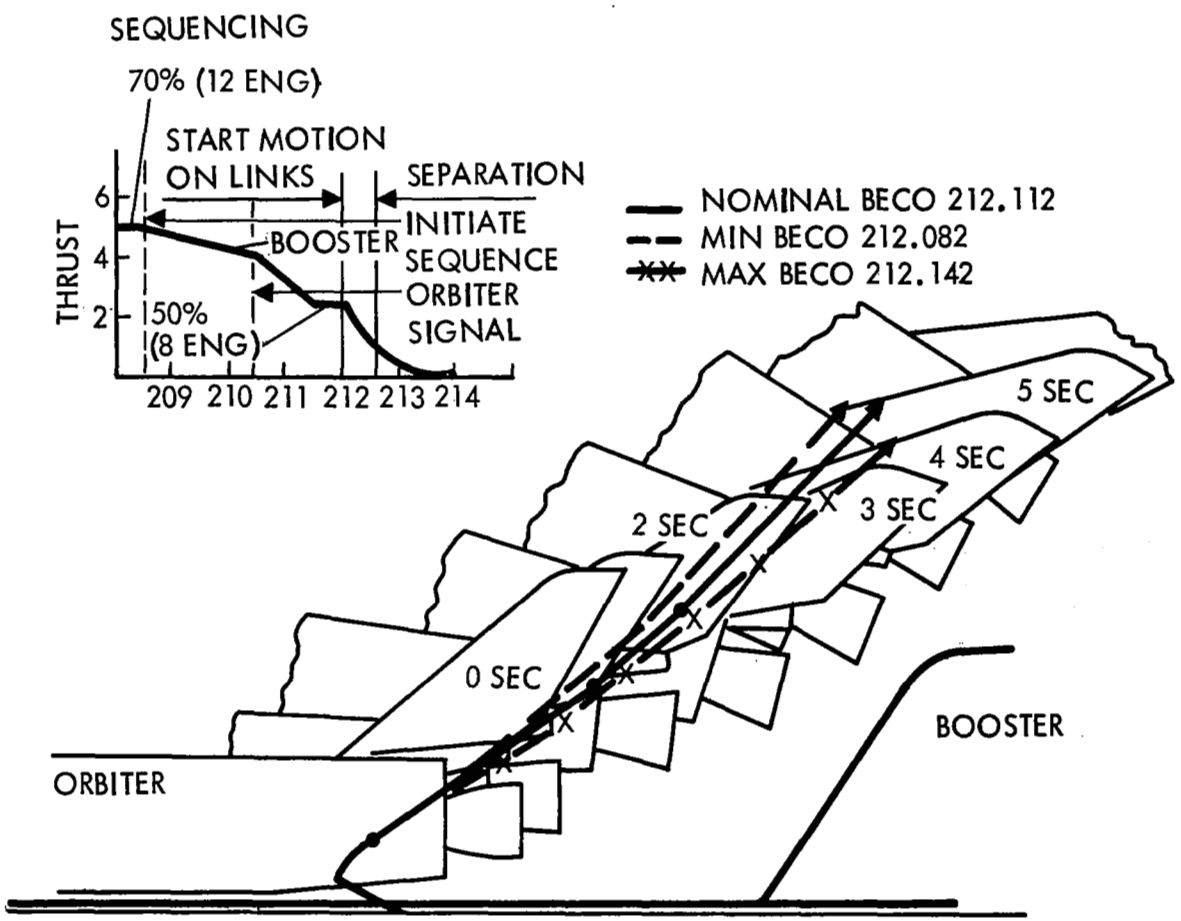

TRAJECTORIES AT ABORT, t = 180 SEC., TWO ORBITER ENGINES

Pre-BECO separation offers many interesting conditions not common to any other area in the trajectory. First, the orbiter is at the point of no return and must proceed once around to continental United States for recovery. The booster cannot go into BECO due to the residual propellants that must be used up, as the booster has no dump capability and cannot land with substantial residuals. The booster, being relatively light at this time with high thrust, must shut off engines and step the remaining engines to MPL (50%) in order not to exceed the 3g design axial limit on the booster. (This means automatic loss of the engine bell due to overheating caused by surrounding engines firing in the near proximity.) It is quite obvious that maximum separation distance can be achieved by using the booster 3g capability.

Four of the booster's twelve engines are shut down before motion on the links. The orbiter engines are locked at a 3-deg. nose-up attitude (nearly on the center of gravity) before and for 10 seconds after start of motion of the links. The booster is preprogrammed for 2 deg./sec. pitch rate to attain a 4-deg. nose-up attitude before motion on the links, then a hard 10-deg. nose-up command during and after motion on the links.

TRAJECTORIES AT ABORT, t = 180 SEC., TWO ORBITER ENGINES

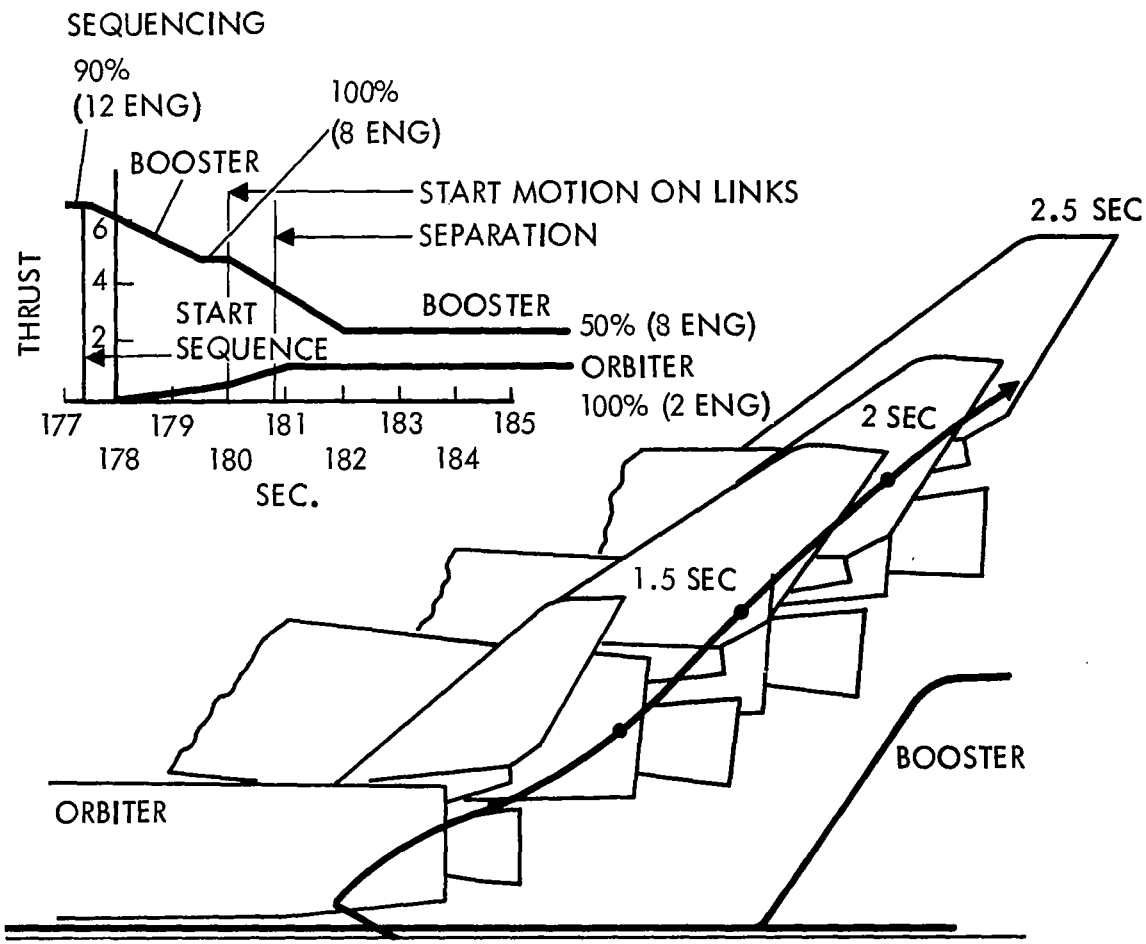

HISTORY OF ANGLE OF ATTACK BEFORE SEPARATION

Maximum aerodynamic conditions set for the current mission trajectory were established as $q_{max.} = 560$ psf with an angle of attack +5 deg. for headwinds and $q_{max.} = 470$ psf with an angle of attack of -6 deg. for tailwinds. Using this data, simulations were made for abort separation at these conditions – separation was not successful. The design limit of $|\alpha q| \leq 2{,}800$ psf-deg. was exceeded for both headwinds and tailwinds.

An examination was then made of the angle of attack history in the region of maximum q (80 seconds). Simulation studies using load-relief-type logic had demonstrated that the angle of attack could be held at any commanded low value ±1.5 deg. This uncertainty resulted from the dynamic lag of the booster/orbiter cluster in response to wind shears and gusts (prevalent in this altitude region) plus the uncertainties associated with onboard measurement of angle of attack. Using the indicated $\pm 3\sigma$ tolerance band, a spectrum of simulations was made and successful separation was achieved for conditions of angle of attack from -1 through +2 deg. Using this data, the sequence and limitations were established as follows.

An abort command is actuated (e.g., by the crew). This then sends a control command to the DCM computer which will supply a new trajectory for the cluster; i.e., to hold at +0.5 deg. alpha and 0 deg. beta (centerline of booster to the relative velocity vector). Alpha, beta, and dynamic pressure can be computed from trajectory (guidance) information in the DCM computer or be determined using the air data sensors on the nose of both the orbiter and booster. The computation from trajectory information is likely to yield more accurate steady-state values, whereas the air data sensors will yield superior rate of change ($\dot{\alpha}$ and $\dot{\beta}$) values necessary to provide anticipatory and damping signal components.

The derived reorientation command will correct within two seconds of initiation, during which the orbiter engines are ignited. After separation, guidance will command new trajectories to both vehicles to maximize clearance in minimum time, while maintaining vehicle loading with design limits. The maximum q abort shows a capability of 610 meters (2,000 feet) of separation in 13.1 seconds from the point of decision to abort.

HISTORY OF ANGLE OF ATTACK BEFORE SEPARATION

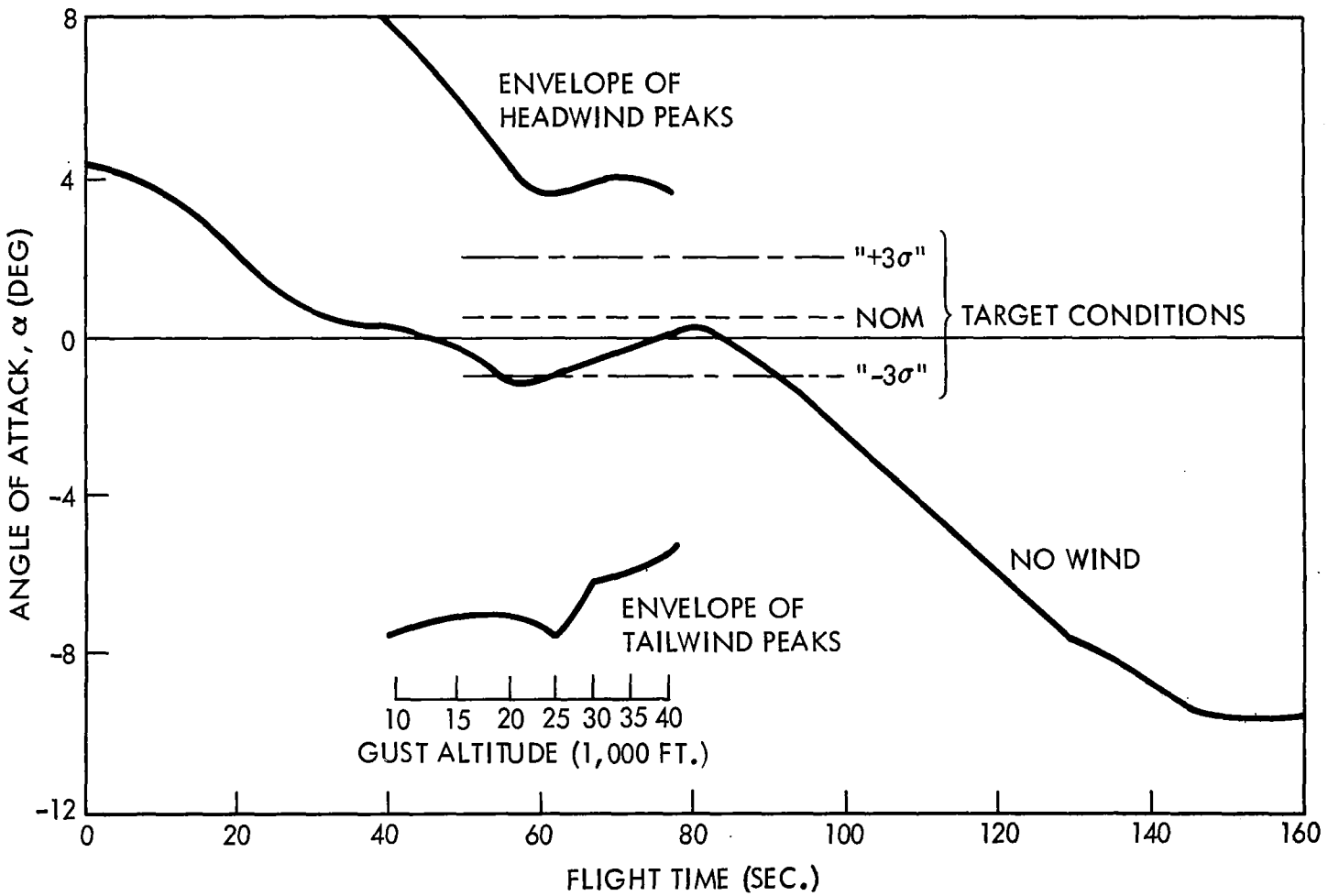

TRAJECTORY AT ABORT, TWO ORBITER ENGINES

The maximum q separation sequence is similar to the pre-BECO conditions. Booster thrust is stepped to near MPL (50%) from NPL (100%) at the start of motion on the links. The 100% thrust at the beginning is required to supply the maximum vertical separation to the system; the reduction of thrust to 55% slows the booster to further improve the separation trajectory. Finally, the booster is stepped back to NPL (100% thrust) to maximize vehicle separation versus time.

The orbiter thrust is built up to MPL (50%) at separation and held. An increase in orbiter thrust to NPL (100%) at this time creates a slower separation in the critical region of maximum interference aerodynamics.

The one- and two-orbiter-engine-out conditions at maximum q separation indicated little or no change in the separation trajectory due to orbiter thrust (or lack of it).

TRAJECTORY AT ABORT, MAX. q, - 0.5-DEG. α, TWO ORBITER ENGINES

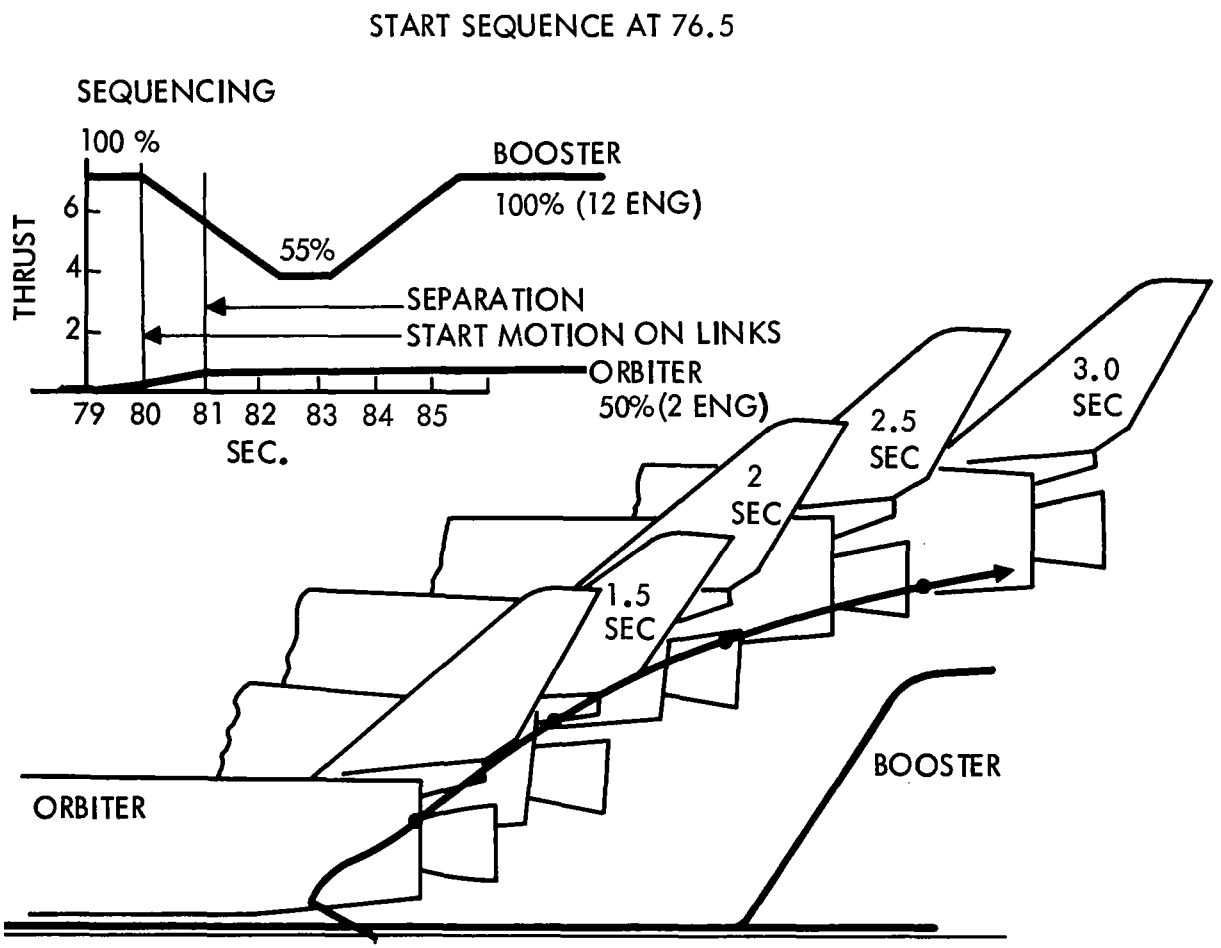

PITCH RATE AND ATTITUDE AT ABORT, TWO ORBITER ENGINES

Shown is the pitch rate and attitude during separation for both the orbiter and booster at 0.5-deg. alpha. The only guidance input is in the orbiter in the form of the engines locked at the nose-up pitch gimbal limits; this is required if any orbiter thrust is used. The pitch rate and attitude of the vehicles show a complementary trend with a very stable booster at a low pitch angle. The orbiter also shows a relatively low pitch angle and acceptable pitch rate with a pronounced oscillatory effect at approximately 3.0-second intervals. This oscillatory response is more evident where the orbiter attitude is directly related to α and q, to produce the high alpha-q conditions. High alpha-q is required for effective separation; it is a combination of this and the booster thrust effect that produces acceptable separation trajectories. However, care must be taken to ensure that the response does not exceed the αq design limits of the wings.

PITCH RATE AND ATTITUDE AT ABORT, MAXIMUM q,
0.5-DEG. α, 2 ORBITER ENGINES

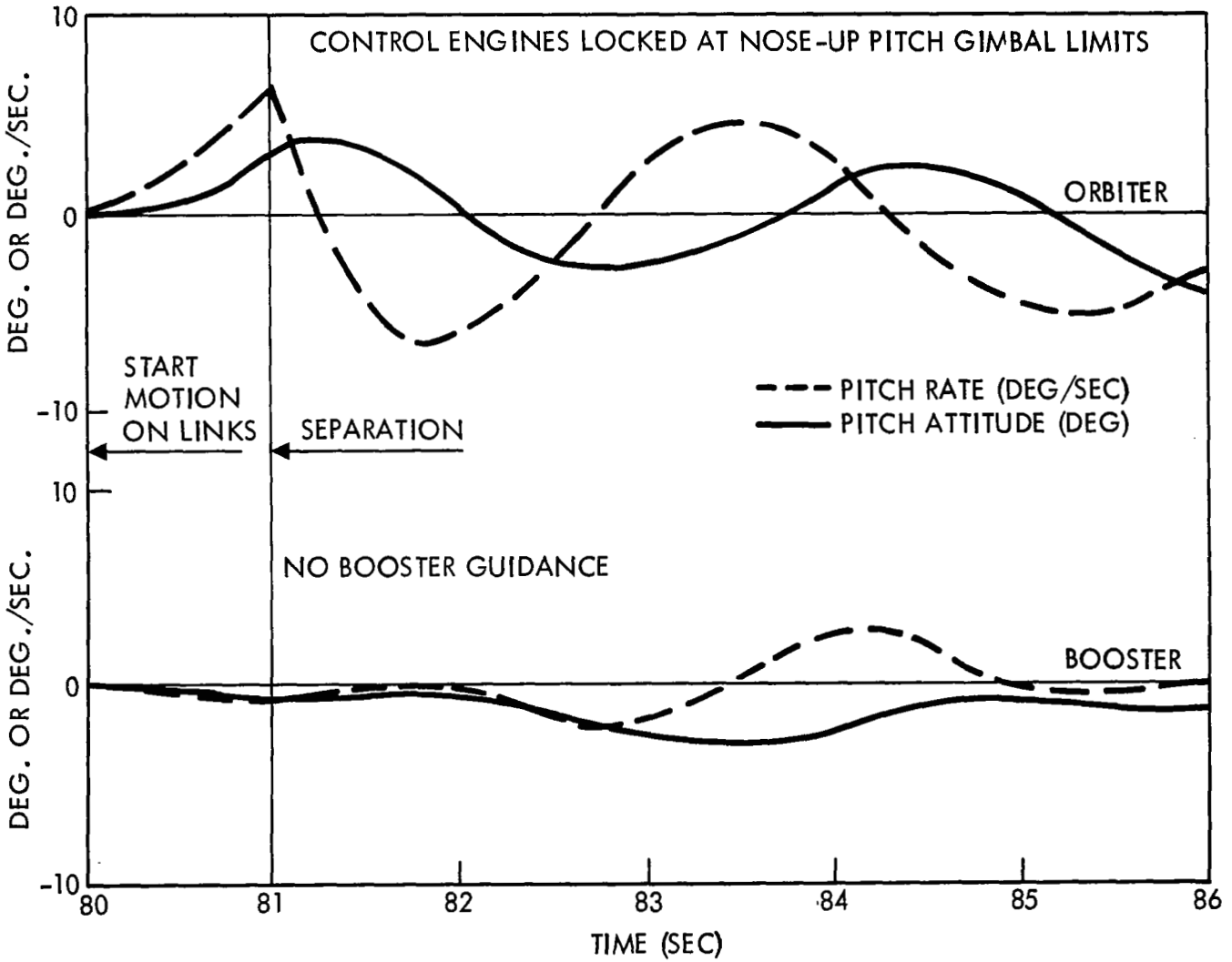

VARIATION OF αq at MAX. q

This figure summarizes αq histories as a function of flight time for the maximum q abort condition. Except for the +2-deg. α (angle of attack) case, the αq histories are well within the design limit. The +2-deg. α case is the design condition, with the orbiter reaching the limit at release and the booster slightly exceeding the limit on the first overshoot following release. Although it appears that biasing the angles of attack by a small amount negatively might balance the αq histories better, difficulty was encountered getting the linkage system under investigation to separate with angles of attack much below-1 deg.

VARIATION OF αq AT MAX q

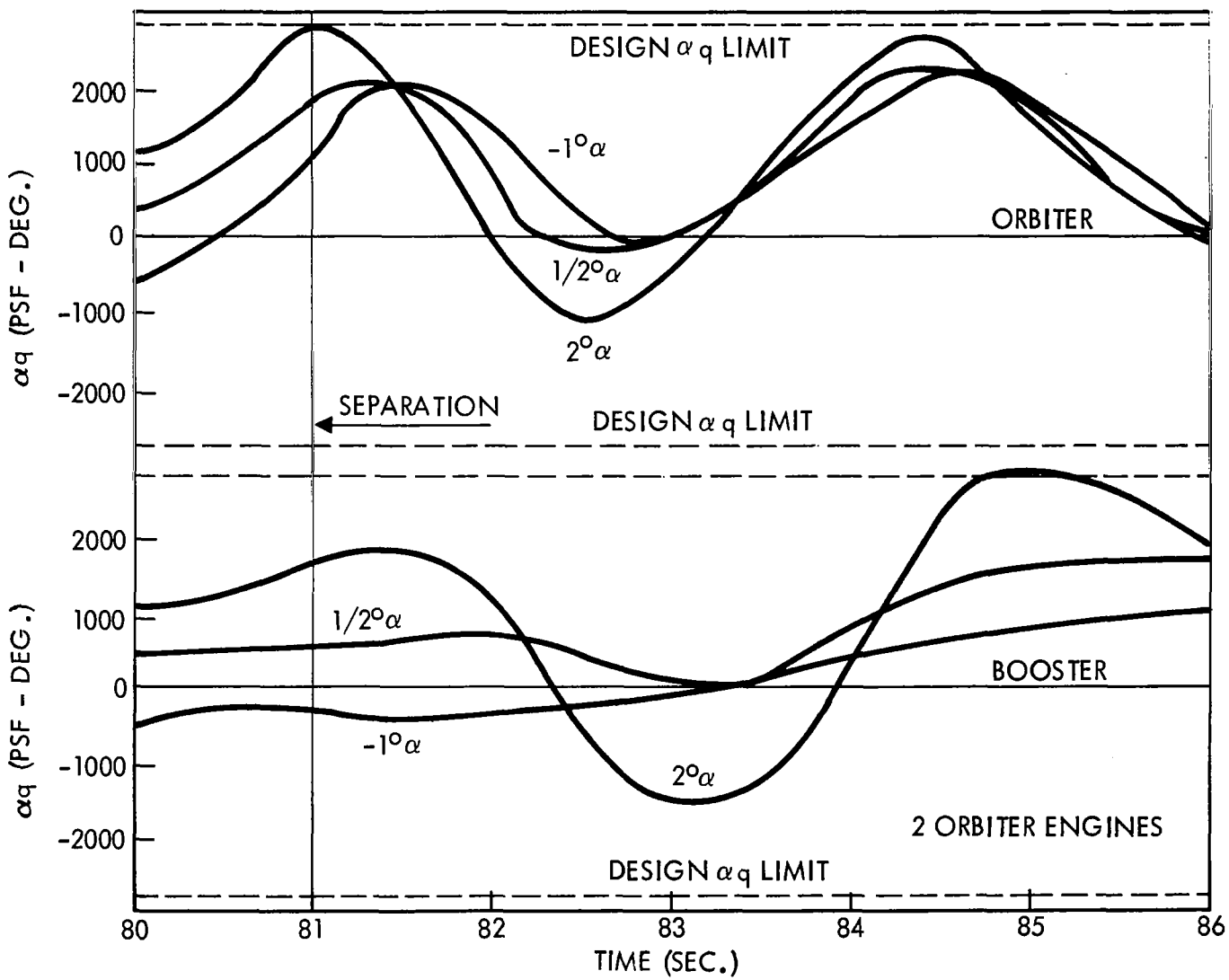

TRAJECTORY AT ABORT, OPTIONAL SEQUENCE

An optional sequence at maximum q is shown. This run was made only for 0.5-deg. α, and is merely meant to show flexibility at maximum q. This particular separation offers slightly lower load at separation and excellent tail clearance by comparison, but it has inherent disadvantages such as shutoff of four booster engines, reducing the attained distance versus time as shown in the figure. It also about doubles the time in close proximity during the crucial high aerodynamic interference region, again directly affecting the distance versus time separation between vehicles. For these reasons, the optional sequence is not recommended.

TRAJECTORY AT ABORT, MAX q, 0.5-DEG. α OPTIONAL SEQUENCE

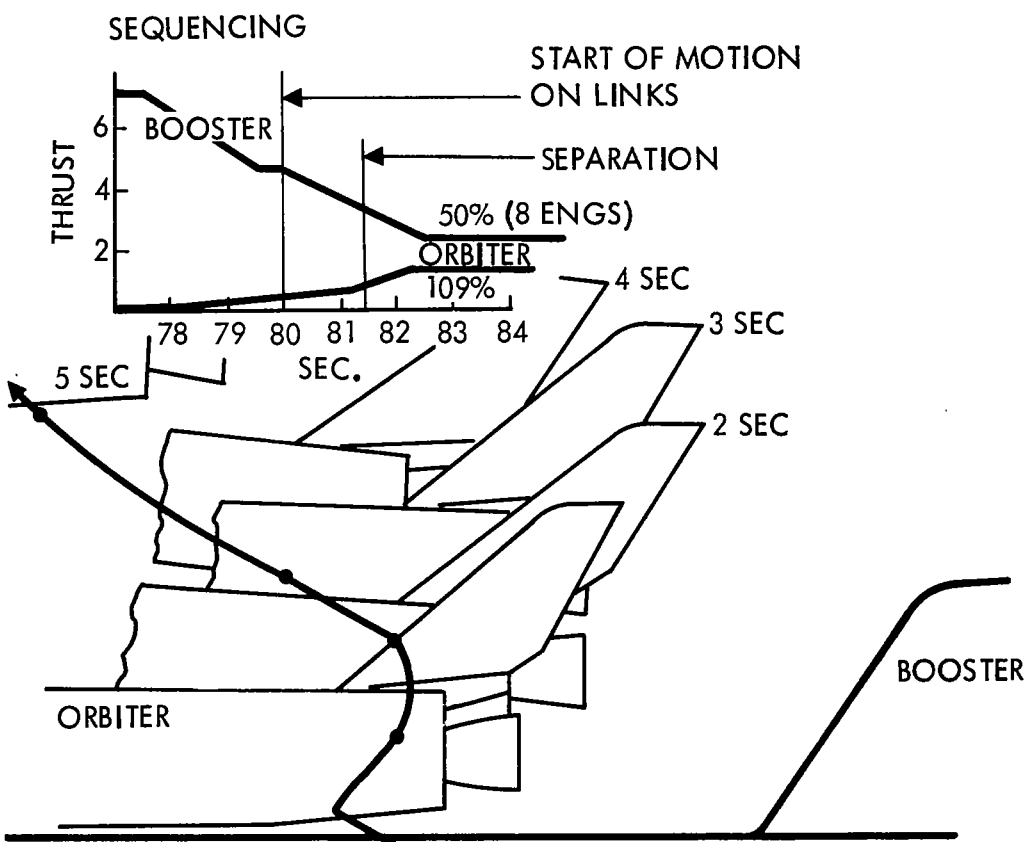

POST-LIFTOFF TRAJECTORY, TWO ORBITER ENGINES

The post-liftoff abort starts the motion on the links at 12 seconds after liftoff. The relative displacement of the vehicles versus time is shown. Advantage is taken at this point of the low dynamic pressure environment to obtain as much lateral displacement as possible to maximize vehicle separation. This is accomplished by guidance to obtain a 30-deg. relative attitude of both vehicles, using maximum thrust available until aerodynamic loading limits are attained.

Sequencing of the post-liftoff separation is similar to maximum q except that maximum available thrust of 109% (EPL, emergency power level) is used on both vehicles during and after sequencing. Maximum power can be used at separation because of the low q; both sequencing and the trajectory are shown.

The trajectory has good tail-clearance characteristics, but definitely has longer than normal tail plume heating during the separation. With atmospheric density high at this time, the plume will also be more concentrated (focused) than at normal staging and will adversely affect heating on the booster vertical tail.

The pitch rate and attitude indicate a very stable booster and a well-controlled orbiter, with the orbiter already responding to its preprogrammed 30-deg. attitude reorientation for the maximum distance versus time sequence. The oscillatory response of the orbiter is still obvious, but is not of concern at this low q.

POST-LIFTOFF TRAJECTORY, TWO ORBITER ENGINES

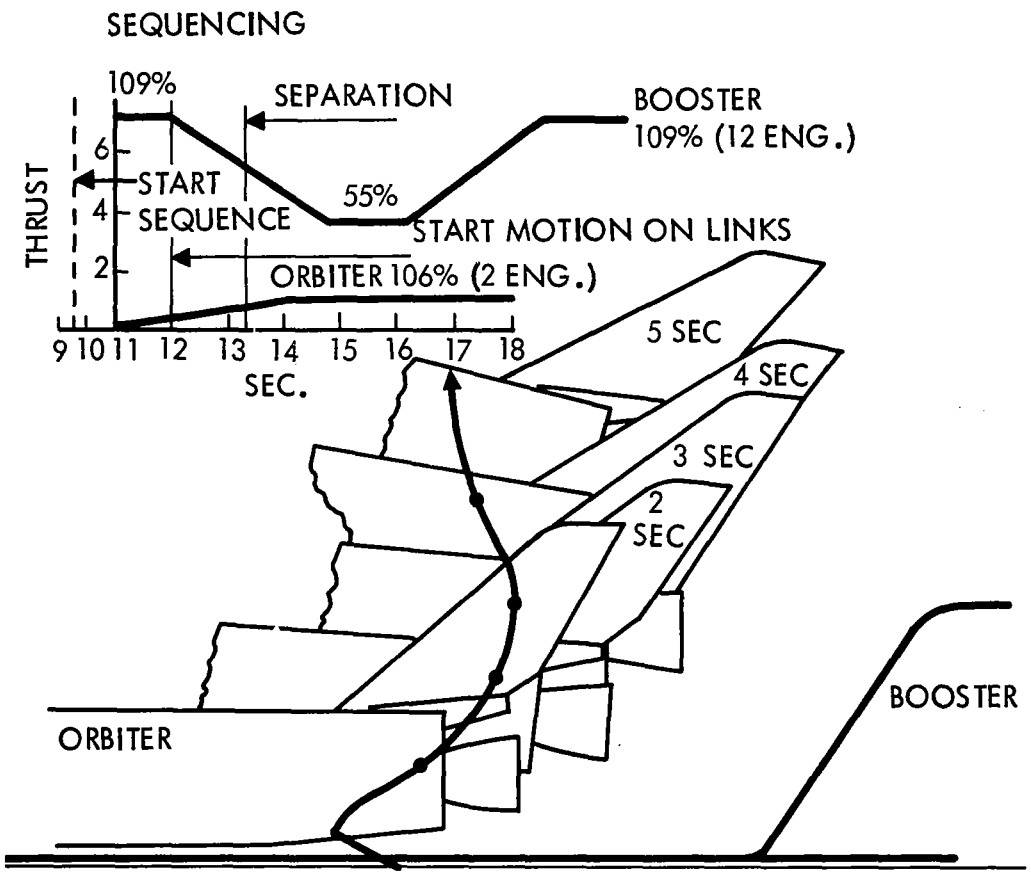

PAD FLYAWAY OF ORBITER

If there is a major system failure while the vehicles are on the pad, it is highly desirable to separate the Space Shuttle stages and fly the undamaged stage to safety. A major system failure, as used here, is a failure so serious as to assess the risk of explosion of one or the other stages as likely and eminent. Examples of such failures would be a major plumbing rupture in the engine compartment leading to a major fire, an engine explosion leading to potential secondary explosions and a major fire, or a chronic fire condition that cannot be controlled, leading to eventual stage destruction.

After initial measures to control the situation, the next best remedy is to get the system airborne and effect inflight stage separation, gaining the maximum lateral displacement per unit time (to mitigate the explosion hazard) and eventually recovering the undamaged stage (or both stages if conditions are favorable). However, it is recognized that the booster element is the most likely to sustain damage before lift off. Further, this is most likely to occur at engine ignition (which can best be described as a series of controlled explosions). In this event, it may be more prudent to initiate immediate engine cutoff and attempt to control the resulting fire (or fire potential). If fire control fails, subsequent engine ignition is probably undesirable (even if possible), and some means of flying the orbiter away from the incapacitated booster is desired.

The optimal stage separation sequence is as follows. The booster is not thrusting and an explosion is presumed inevitable. The orbiter ignites its engines and achieves a thrust level somewhat below one q earth relative. The linkage system is released for deployment and the orbiter moves out along the linkage trajectory arc under control of the orbiter engines, which are being throttled (for rate of deployment control) but not gimbaled (to prevent a feedback instability, since the orbiter rotational motions are fully constrained). At the appropriate time, the links are disconnected and the linkage system stowed; substantial clearance is thus obtained between the orbiter and the disconnected links in a fraction of a second. The orbiter engines are then gimbaled and stepped to their emergency power level (EPL or 109% thrust), and the orbiter begins the arduous task of flying to safety. The orbiter thrust-to-weight ratio at liftoff is 1.24g with the engines running at the emergency power level (EPL).

The pad flyaway capability is shown to demonstrate the feasibility of flying the orbiter off the pad, if desired. Analysis shows the ability to achieve 305 meters (1,000 feet) in 18.9 seconds, and 610 meters (2,000 feet) in 23.2 seconds from the decision to abort off the pad.

PAD FLYAWAY OF ORBITER

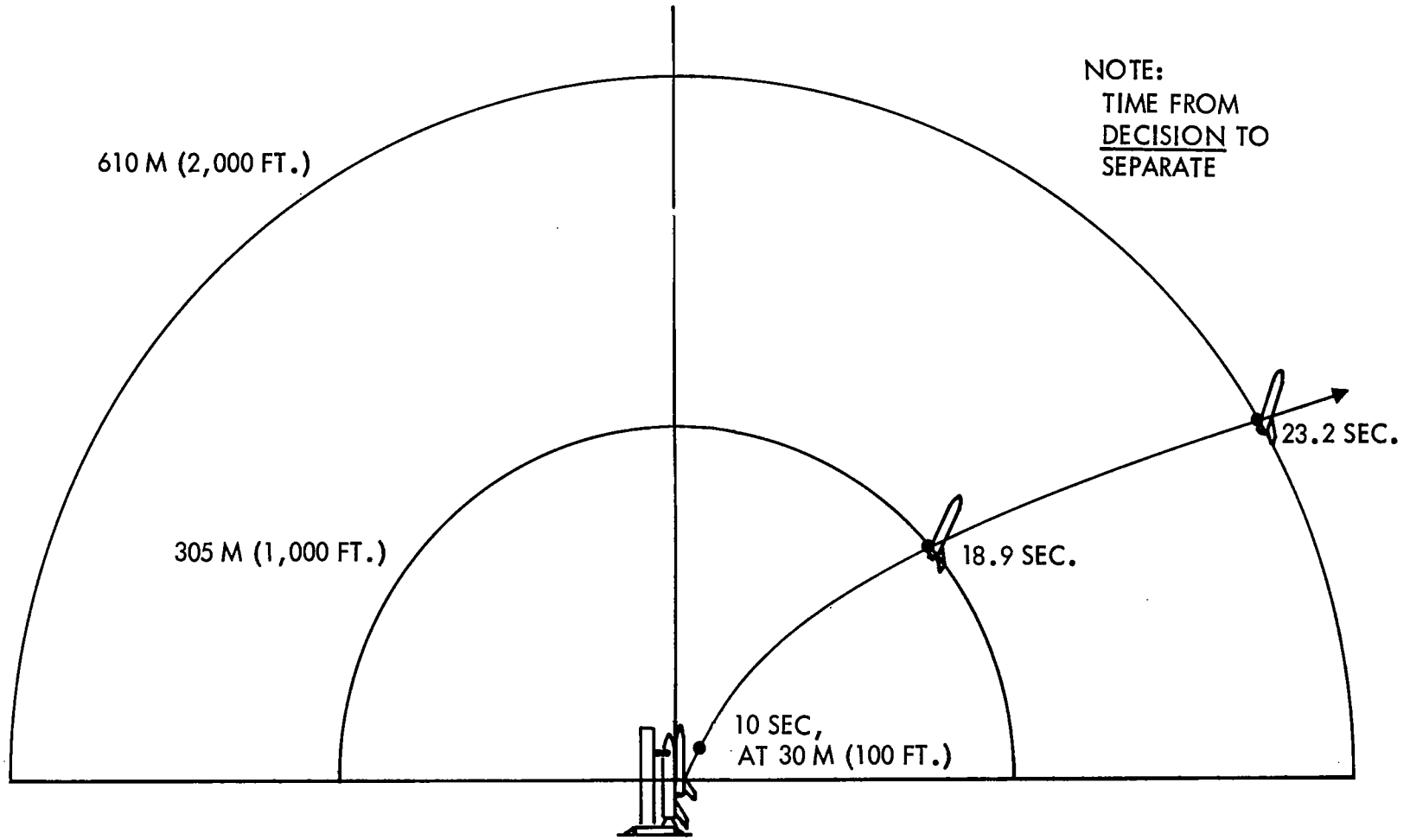

PAD FLYAWAY TRAJECTORY, TWO ORBITER ENGINES

Both the sequence and trajectory are shown here. EPL is used on the orbiter and maintained to maximize separation distance. The trajectory shows approximately a 10-second close proximity and plume impingement on the tail. The plume impingement is mitigated by the initial 3-deg. nose-up pitch gimbal angle on the orbiter engine preceeding and during motion on the links, but there are also greater than normal plume effects on the top portion of the booster, especially from the aft attachment forward. It is this sequence that would undoubtedly design the thermal protection system if abort off the pad is to be used.

PAD FLYAWAY TRAJECTORY, TWO ORBITER ENGINES

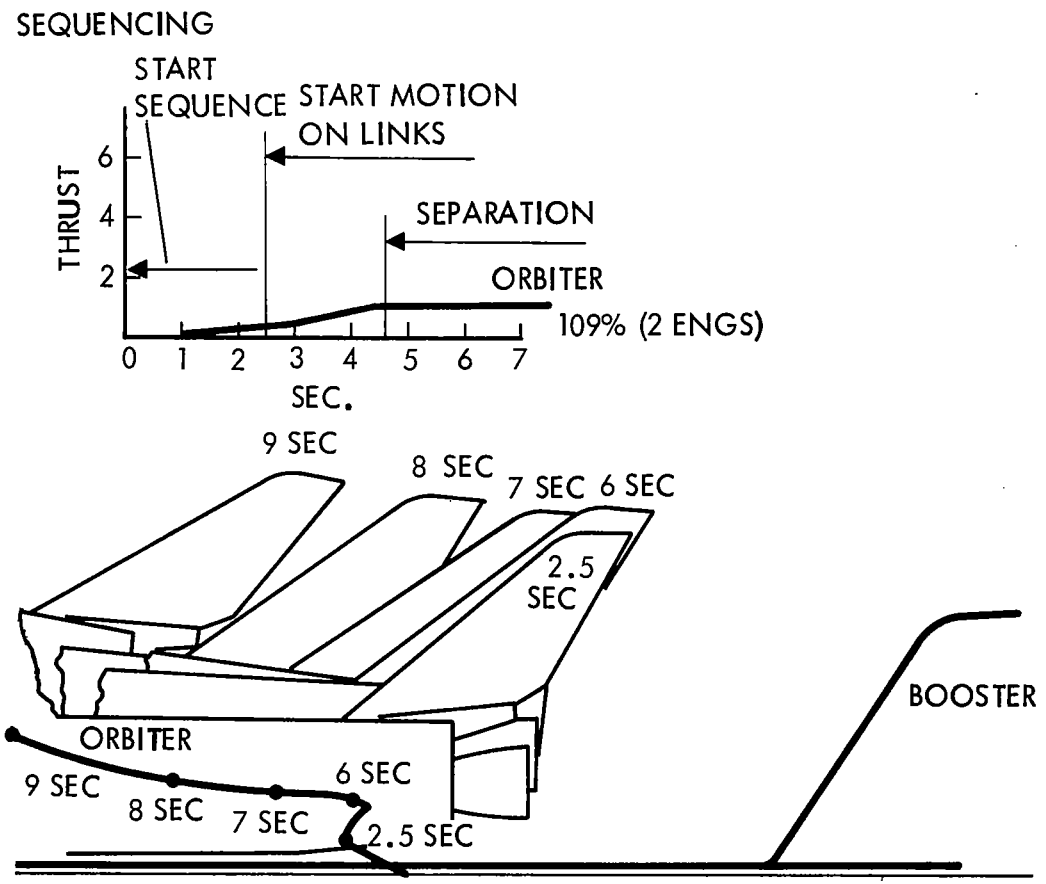

ORBITER ENGINE INLET ACCELERATIONS DURING SEPARATION SEQUENCE

This figure demonstrates that the longitudinal acceleration at the orbiter main propulsion engine inlets exceed the 0.2g guarantee in every case investigated. This ensures that sufficient propellants are available to the main engines to provide propellant settling and prevent cavitating the pumps.

ORBITER ENGINE INLET ACCELERATIONS DURING SEPARATION SEQUENCE

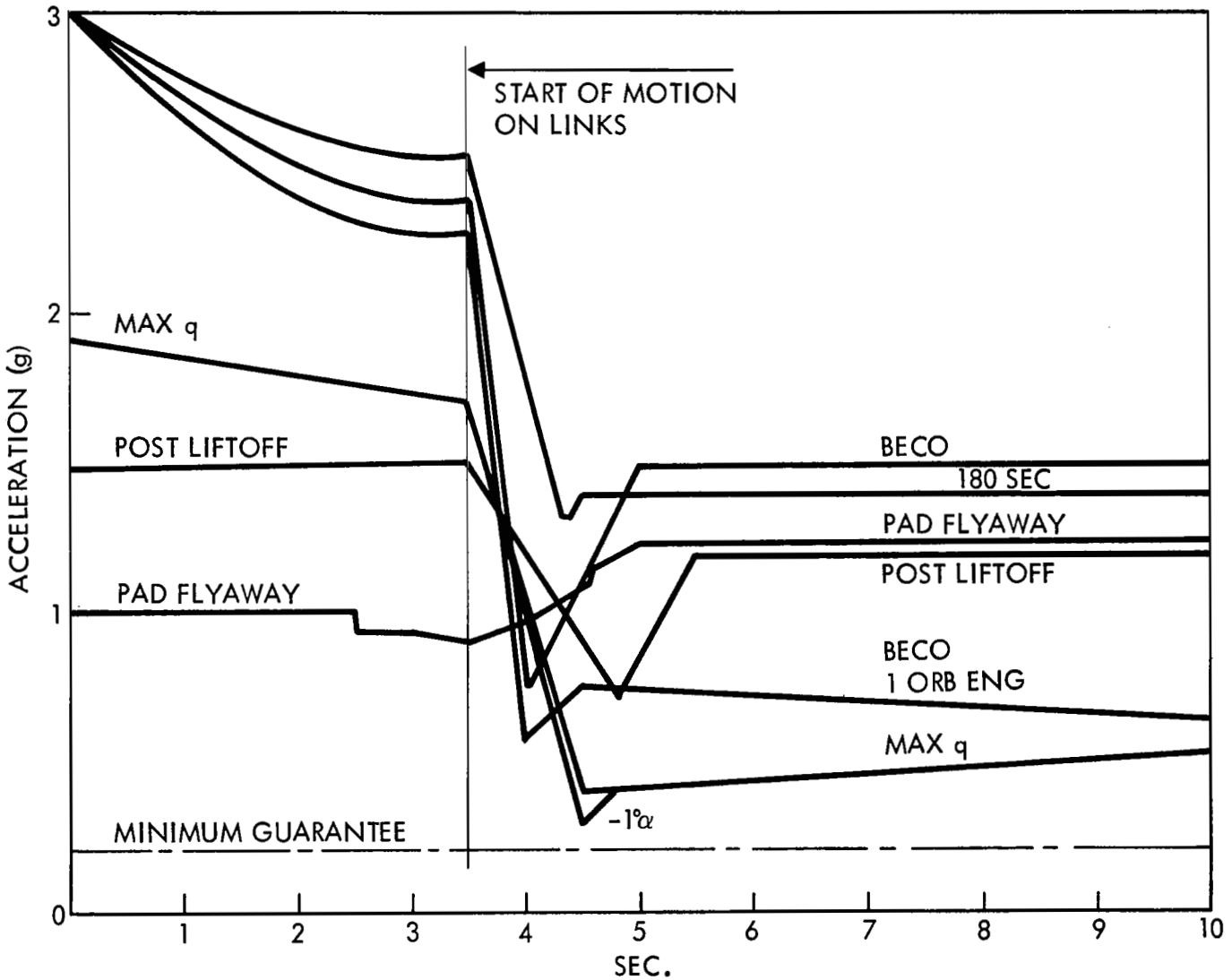

BOOSTER CREW ACCELERATIONS DURING SEPARATION SEQUENCE

This figure illustrates the rigid-body accelerations experienced by the booster's crew at the various abort conditions.

BOOSTER CREW ACCELERATIONS DURING SEPARATION SEQUENCE

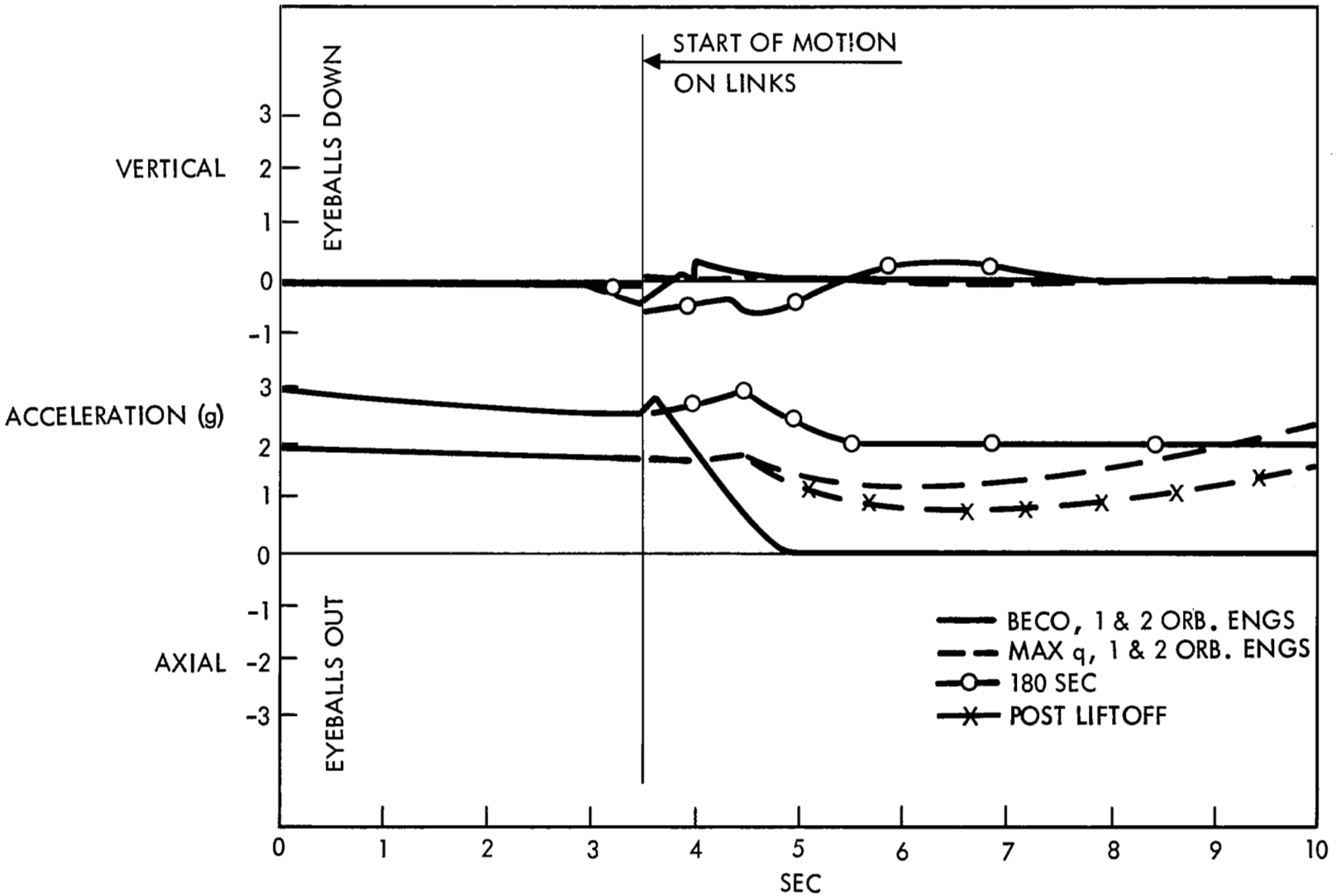

ORBITER CREW ACCELERATIONS DURING SEPARATION SEQUENCE

This figure illustrates the rigid-body accelerations experienced by the orbiter's crew and, with the preceding figure, demonstrates that, in spite of the speed at which separation takes place, the acceleration environment which the crew (hence, the payload) is subjected to is quite moderate.

ORBITER CREW ACCELERATIONS DURING SEPARATION SEQUENCE

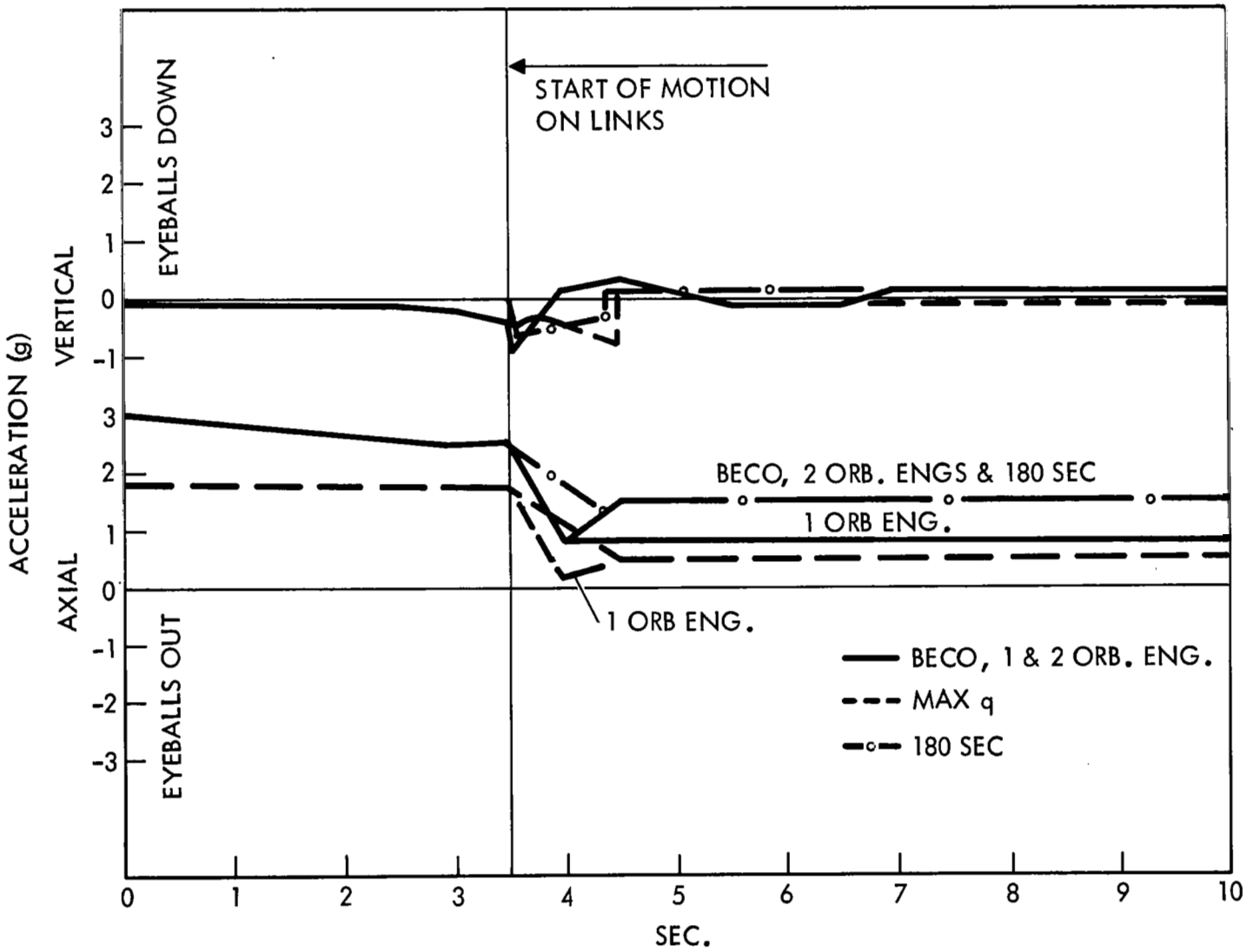

ENVELOPE OF ELAPSED TIME

The time required to achieve 305 and 610 meters (1,000 and 2,000 feet) of separation distance is measured from the decision to abort separate. Pre-liftoff and normal staging events have been added to the figure for reference. About 610 meters (2,000 feet) of separation is attained within 18 seconds anywhere during boost phase flight. Before liftoff, the orbiter can ignite its engines, separate from the booster, and achieve 610 meters (2,000 feet) of separation in 23.3 seconds (assuming its systems are ready). Following BECO, 24 seconds are required to achieve 610 meters (2,000 feet) of separation with one orbiter engine failed. History indicates that these times are generally sufficient to save one of the stages in the event of subsequent catastrophic destruction of the other stage.

ENVELOPE OF ELAPSED TIME TO 305 & 610 M (1,000 & 2,000 FT.) SEPARATION

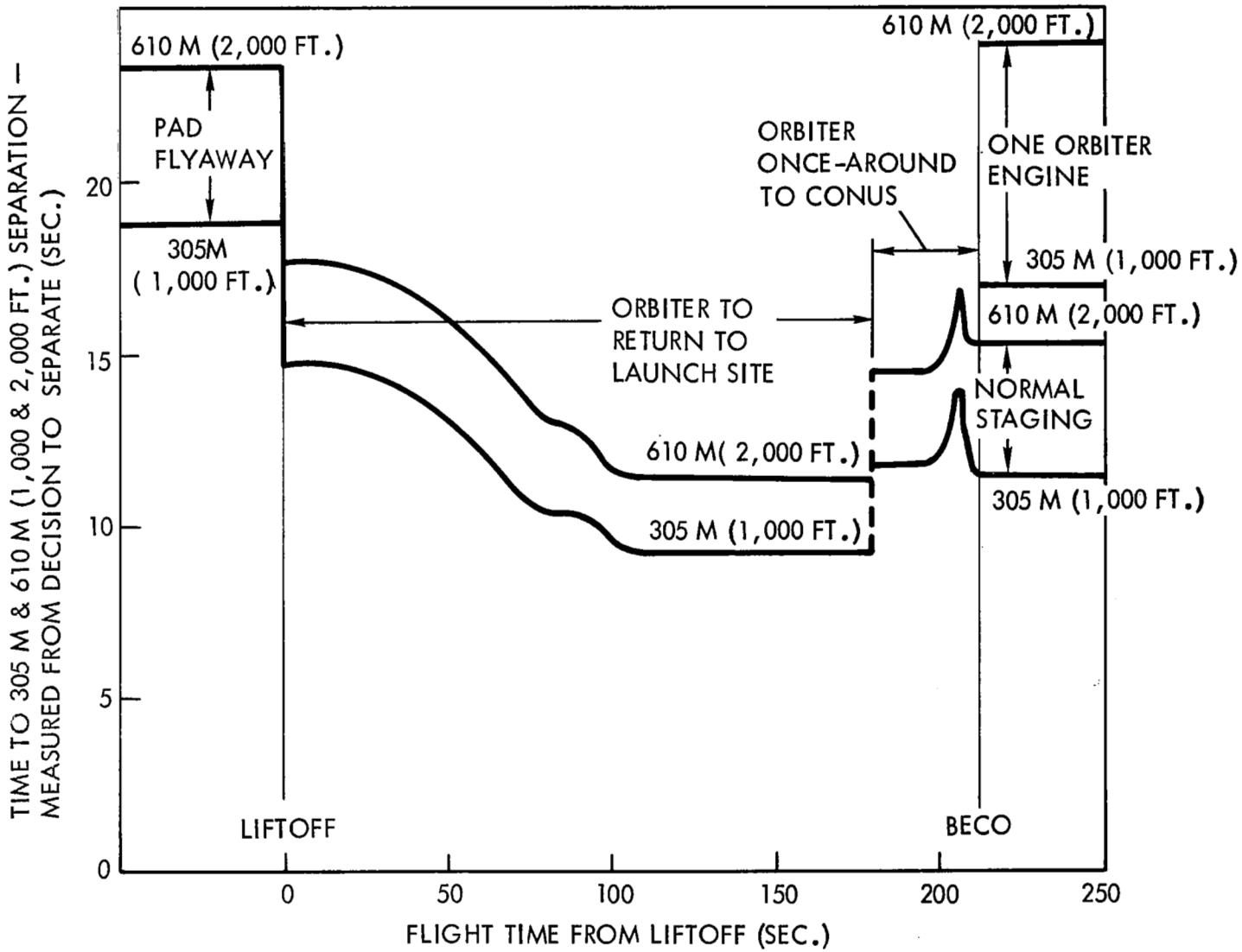

ABORT SEPARATION PENALTIES, AN ASSESSMENT

Definite penalties are associated with abort capabilities due to the additional system design requirements they impose. The most obvious areas are in increased structural loads (which imply increased weight), heating effects (which also include weight), program software, system complexity, etc. This section points out the most serious areas of consideration.

The structural loads that are directly chargeable to the separation system were analyzed. As previously mentioned, the interstage attachments and structure for ground handling and up-flight would be required regardless of the separation system.

All loads in relation to the separation system were derived from the computer simulation (P5255) as described in Ref. 3, which used rigid-body analysis.

The composite of the link resultant loads, both before and during separation, for the various abort and normal staging conditions are shown. It becomes obvious that Load A is a direct function of the booster thrust before release and that A is not designed by separation but rather by the up-flight 3g design limit. Link B functions before motion of the links and sees relatively low loads with very little spread for all conditions; again, it is not designed by separation but by the up-flight conditions at maximum q.

COMPOSITE OF INDIVIDUAL A&B RIGID-BODY LINK LOADS

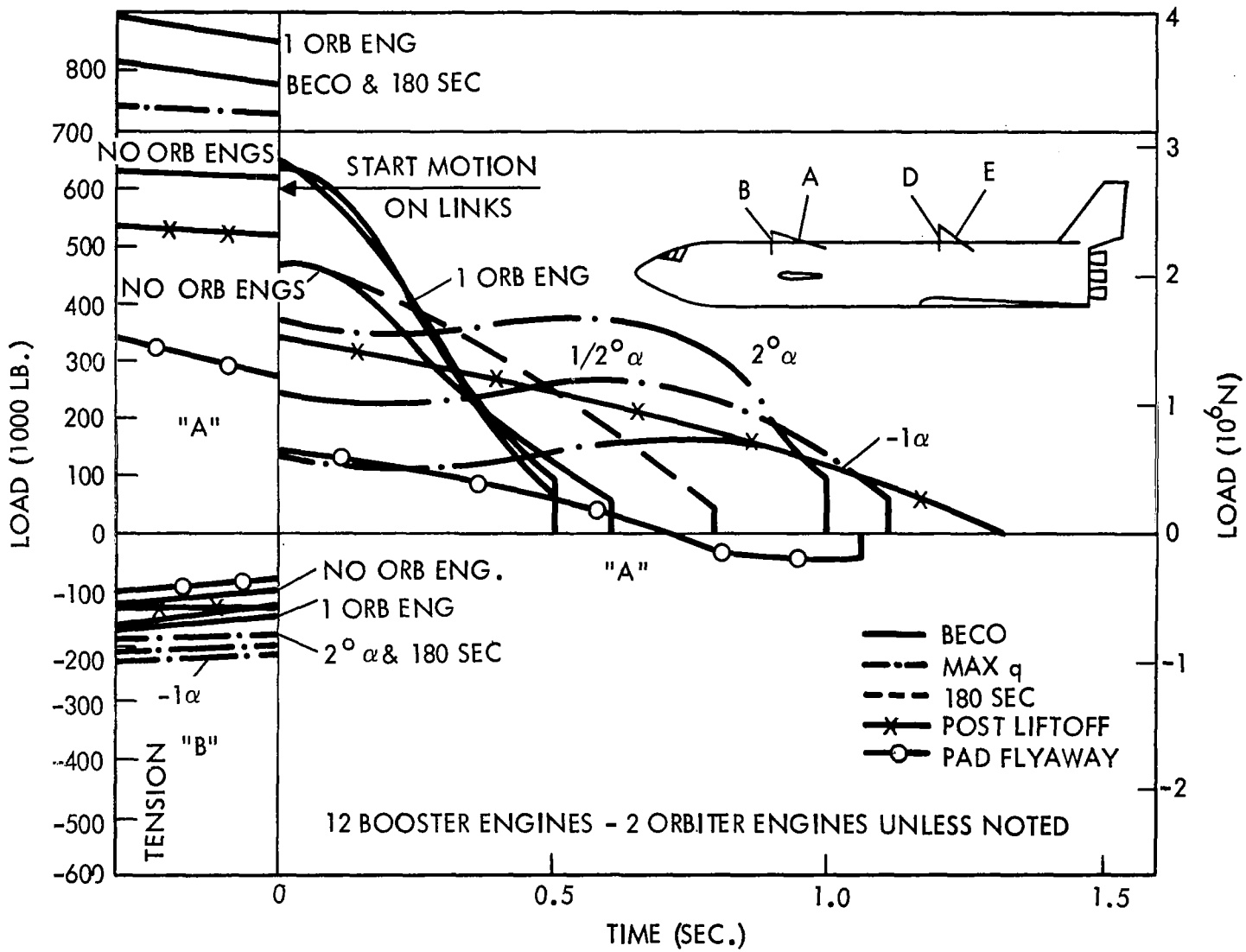

COMPOSITE OF INDIVIDUAL D&E RIGID BODY LINK LOADS

Links A and E are the only ones to sustain loads during motion on the links. At no time during the motion on the links does the vertical component in the booster or orbiter attachment exceed the initial load (which is considerably less than the design load), especially in the orbiter. Again the load in Link D only functions before motion of the links and is relatively low.

Attachment loads during ascent do not vary much once the orbiter cg and mass have been established. The 3g design limit load during ascent determines the main axial force to be reacted between attachments; therefore, the only other factor to consider is the coupling taken up by the forward and aft vertical attachments. The axial load may be taken out either at the forward or aft attachments, if desired, and the vertical reaction may be varied by increasing or decreasing the angle of the axial members between the booster and orbiter. It is feasible, within limits, to direct load forward or aft by varying link geometry. This must be done carefully, however, because it directly affects the trajectories at separation.

Link E, which is not a load-carrying member until separation, is totally designed by separation. Link E loads are shown and are directly affected by the separation condition, as shown in this composite. The time differential for each condition, until zero load is attained, is due to the time required for motion on the links. This time can also be expressed in terms of the angle theta (relative angle between centerlines of both vehicles). The purpose of the longer time on the links (or increase angle theta) is to provide good separation trajectories and is required for all conditions other than normal staging (where booster thrust is reduced to zero).

The normal staging load of Link E is relatively low, and the load shift from zero load to approximately 890,000 newtons (200,000 pounds) at the start of motion on the links is still low by comparison to that at the maximum q condition shown. It is obvious that the Link E penalty for maximum q abort is quite costly relative to normal staging, and elastic effects in this area are of concern. The orbiter and booster attachment loads (both horizontal and vertical components) show the overall effects due purely to abort separation, the largest being the axial load E_x at both orbiter and booster. This condition also gives rise to further study with the possibility of taking the main 3g axial load out through the aft member E. This would not penalize maximum q abort, but the forward link A load at normal staging must be traded against the weight penalties for both the orbiter and booster.

COMPOSITE OF INDIVIDUAL D & E RIGID BODY LINK LOADS

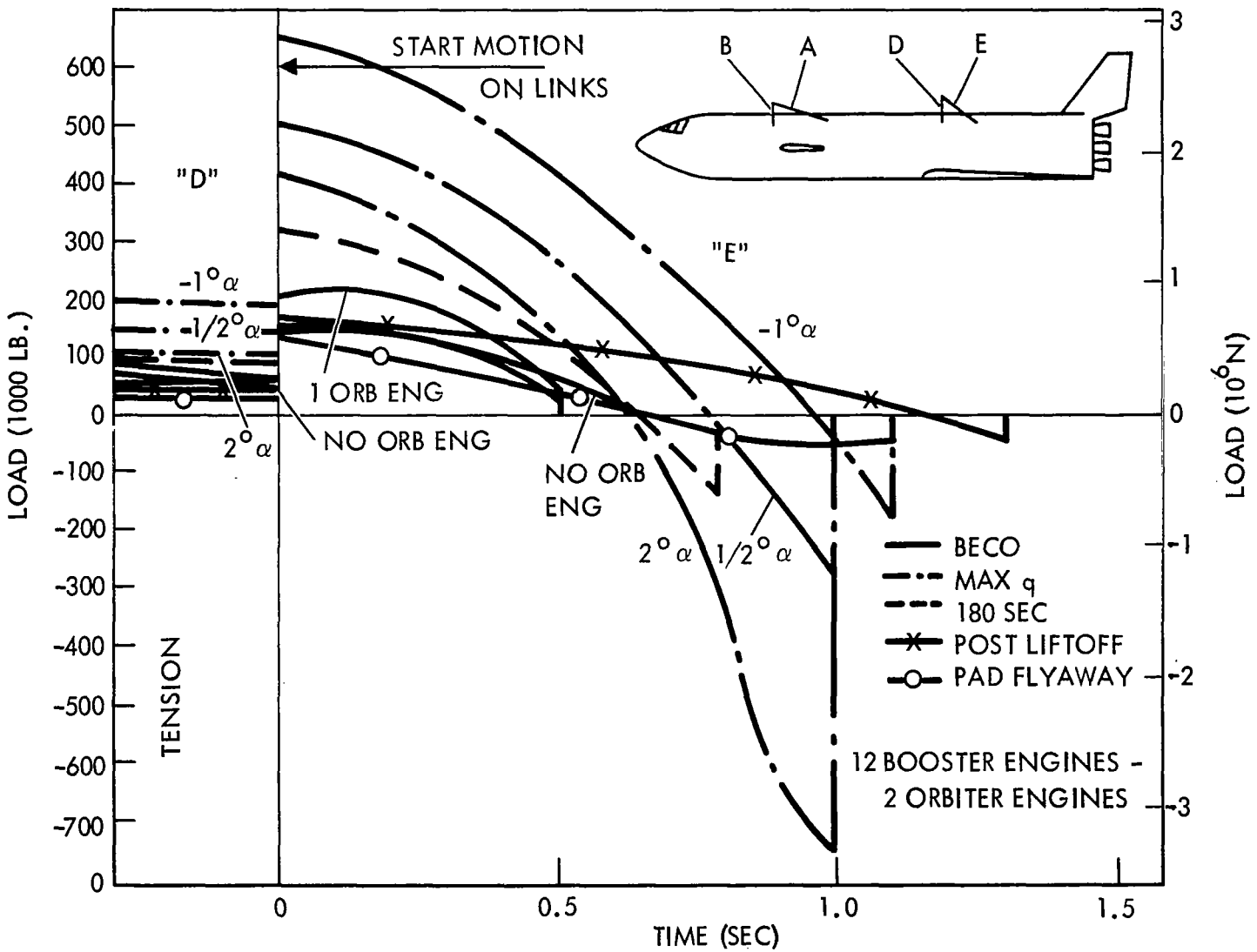

AFT LINK ASSEMBLY MASS PENALTY

Mass penalties for abort separation must be evaluated as those only directly chargeable to abort. To this end, a comparison has been made of each area affected.

The abort loads were analyzed and used to determine the mass penalty. In the review of the abort conditions it is quite apparent that the predominating area is abort at high q. Also apparent is the fact that it is solely the aft axial link (described as Link E) and its backup structure in both the booster and orbiter that inherits the majority of the mass penalty.

The figure shown gives a breakdown of the aft link assembly, comparing normal staging with abort at maximum q. A 550-kilogram (1,213-pound) mass penalty was assessed.

AFT LINK ASSEMBLY MASS PENALTY

	MASS IN KG (LB.)		
	NORMAL STAGING	MAX q ABORT	Δ MASS
LONGITUDINAL TUBES	108 (237)	249 (550)	142 (313)
BOOSTER PIVOT FITTINGS & BEARINGS	109 (240)	259 (570)	150 (330)
CREEP CYLINDER & BEARING	127 (281)	255 (562)	127 (281)
RETRACT ACTUATORS (AFT)	53 (116)	76 (168)	24 (52)
PYROTECHNIC BOLTS	59 (129)	78 (172)	20 (43)
INSTALLATION BOLTS	11 (24)	33 (72)	22 (48)
RETRACT ACTUATORS (FWD)	249 (548)	315 (694)	66 (146)
	714 (1,575)	1,265 (2,788)	550 (1,213)

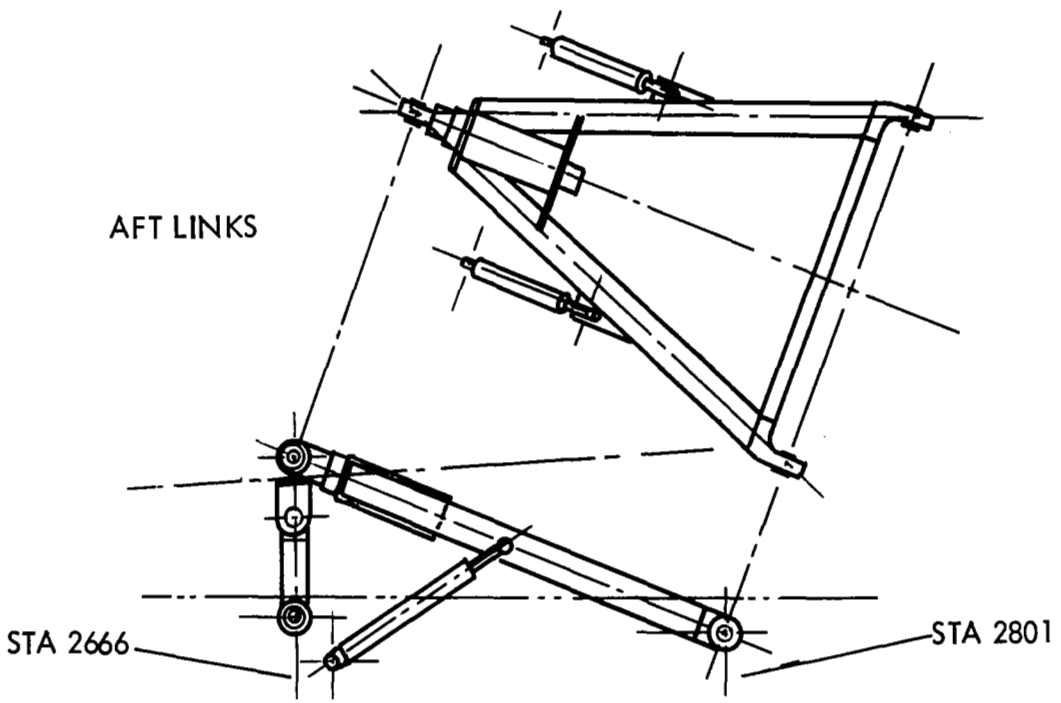

BOOSTER BULKHEAD MASS PENALTY

The resultant increase in the backup structural mass in the booster is shown. A comparison of actual resultant design load is also shown at the attachment at the top of the bulkhead. This increase is due to only the vertical load components and mounted to 1,318 kilograms (2,906 pounds) of inert mass.

BOOSTER BULKHEAD MASS PENALTY

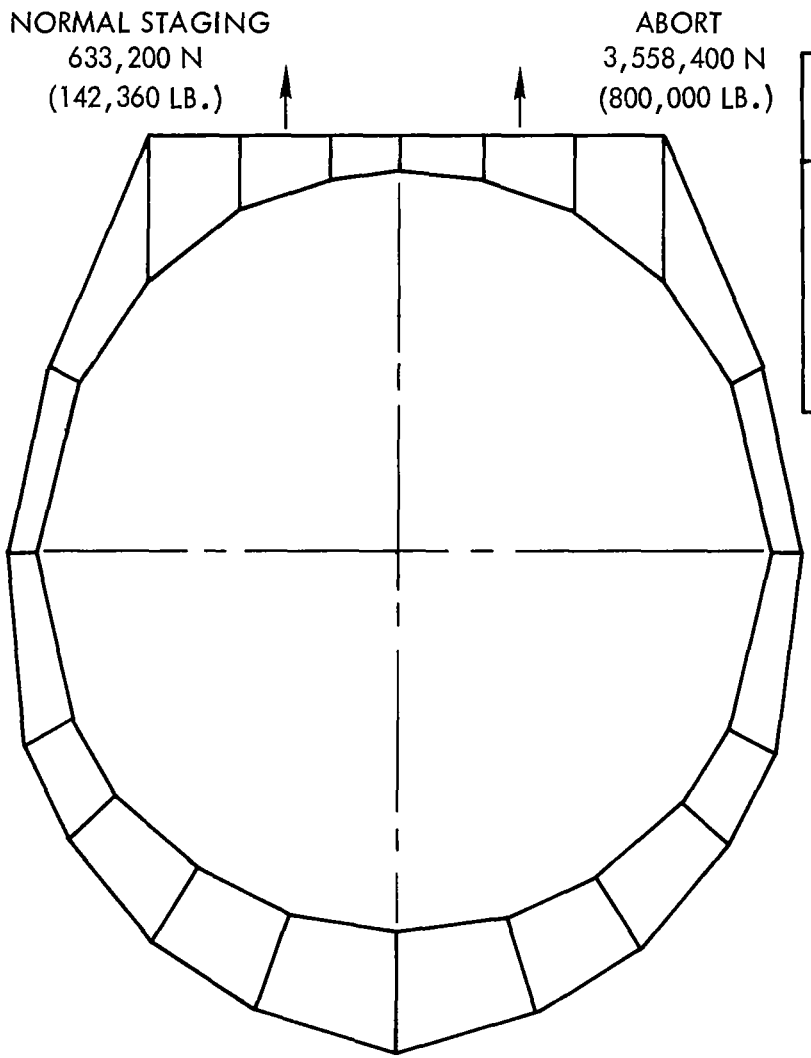

MASS IN KG (LB.)

	NORMAL STAGING	MAX αq ABORT	Δ MASS
CAPS	375 (826)	1,044 (2,301)	669 (1,475)
WEBS	316 (697)	897 (1,978)	581 (1,281)
FITTINGS	35 (77)	103 (227)	68 (150)
	726 (1,600)	2,044 (4,506)	1,318 (2,906)

BOOSTER SKIN AND LONGERON MASS PENALTY

The axial load results in an increase in mass in the longeron and skin (for shear transfer), of 138 and 193 kilograms (305 and 425 pounds), respectively.

BOOSTER SKIN & LONGERON MASS PENALTY

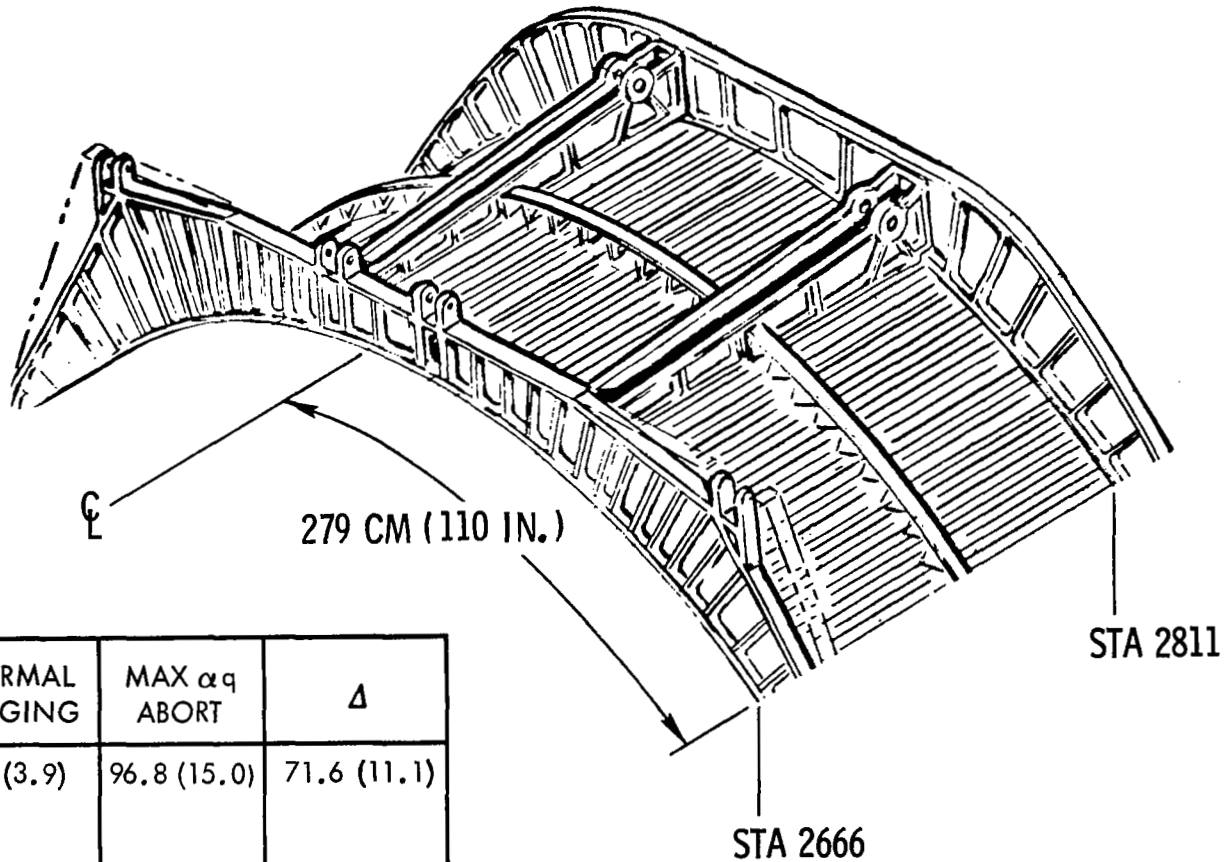

	NORMAL STAGING	MAX αq ABORT	Δ
AVG. CROSS SECTION IN CM^2 (SQ. IN.)	25.1 (3.9)	96.8 (15.0)	71.6 (11.1)
MASS IN KG (LB.)	49 (108)	187 (413)	138 (305)
SKIN GAGE IN CM (IN.)	0.432(0.170)	0.706(0.278)	0.274 (0.108)
MASS IN KG (LB.)	303 (668)	496 (1,093)	193 (425)

ORBITER MASS PENALTIES

Orbiter attachment penalties for the abort phase are shown and, in terms of payload, the 978-kilogram (2,155-pound) mass penalty appears quite high. Some alternatives could be examined to reduce this penalty, but they were not in the scope of this study.

One approach would be to attach the orbiter not through the aft payload bulkhead but through the engine mount structure, which should be quite massive. Another approach is to consider a push orbiter and possibly take the main 3g axial load through the aft attachment; this would not penalize maximum q abort and would probably eliminate all aft weight increases due to abort. However, consideration must be given to the forward attachment at normal separation, which would probably become penalized. Preliminary runs indicate that the forward axial link loads would be higher during normal separation than during maximum q abort, but a possible decrease of the booster mass penalty due to the smaller shear surface transfer area (due to the reduction of the forward link design condition, which would be reduced by about 50%) must also be considered.

Another factor would be the orbiter mass penalty due to a conversion from a pull to a push design, but this should be relatively small.

ORBITER MASS PENALTIES

MASS IN KG (LB.)

ITEM	NORMAL STAGING	MAX α q ABORT	Δ MASS
BULKHEAD	525 (1,158)	1,034 (2,280)	509 (1,122)
FUSELAGE FLOOR	232 (512)	624 (1,375)	391 (863)
FITTING	32 (70)	109 (240)	77 (170)
TOTAL	789 (1,740)	1,767 (3,895)	978 (2,155)

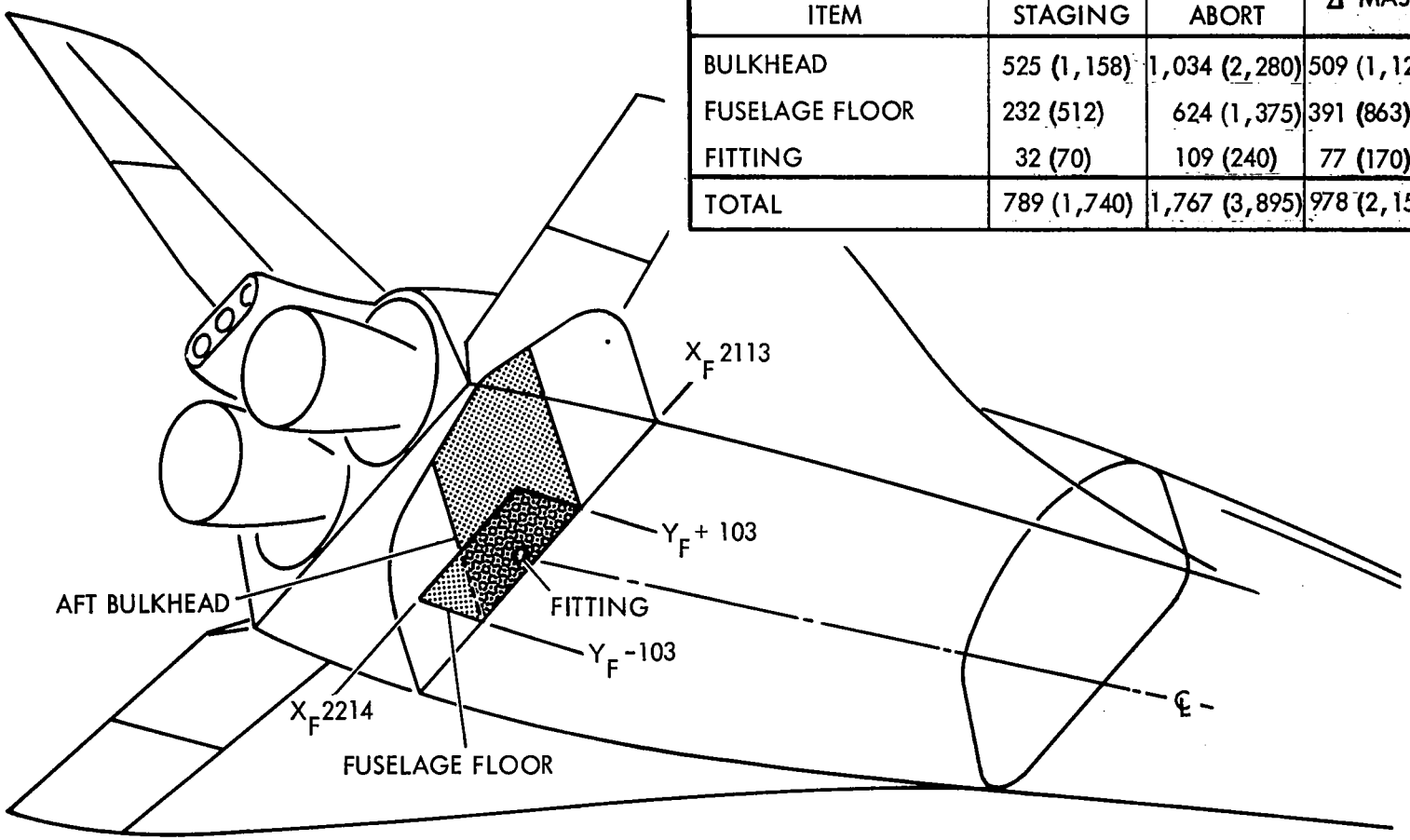

SUMMARY OF ABORT STRUCTURAL LOADS MASS PENALTIES

The following table summarizes structural loads mass penalties for abort. This converts to about 1,371 kilograms (3,023 pounds) of lost payload, (394 kilograms or 868 pounds of which is contributed by the booster).

The present baseline is designed for the plume effects of normal separation. This includes heating and acoustic conditions normally occurring while the orbiter engines are building up thrust during separation sequencing. The actual duration of plume impingement is meaningful only for approximately 5.5 seconds, of which 2.5 seconds is normally below the 20% thrust level. For abort, the condition on or near the pad becomes the design case because (1) maximum thrust of the orbiter is required for safe separation, and (2) the orbiter plume at sea level is more concentrated (focused). The orbiter plume will also sweep the top of the booster during the first few seconds after separation for this condition. It is estimated that an additional mass penalty of from 227 to 454 kilograms (500 to 1,000 pounds) on the booster would be required. This is equivalent to an additional 40 to 81 kilograms (89 to 178 pounds) of payload penalty.

Separation system sequence computer control and programming are strongly affected by any abort capability that would require considerable computer tasks and storage. Vehicle data must be pooled on a continuous basis and stored for sequence updating as required and, of course, new sequences would be required probably every 15 seconds of flight.

A larger scope for vehicle and subsystem control and monitoring would also be required with automatic and/or manual immediate separation upon detection of a critical failure. The penalties for this additional software capability are difficult to assess, but must certainly be considered.

SUMMARY OF ABORT STRUCTURAL LOADS MASS PENALTIES

		WEIGHT (LB.)	MASS (KG)
BOOSTER			
	LINKAGE, FITTINGS, ACTUATOR, CREEP CYLINDER , & BOLTS	1,213	550
	BULKHEAD, STATION 2801	2,906	1,318
	DRAG LONGERONS	305	138
	SKIN PANELS	425	193
	TOTAL	4,849	2,199
ORBITER			
	BULKHEAD, STATION 2113	1,122	509
	CAPS AND SKIN PANELS	863	391
	LOCAL FITTINGS	170	77
	TOTAL	2,155	977

Major conclusions and recommendations for future study are presented in this table.

REFERENCES

1. "Space Transportation Systems (STS) Study (U)," Section 19.12, "Separation System Analysis," Unclassified, SAMSO-TR-69-348, November 1969 (Confidential).
2. L.R. Bird, "Post-Test Report for Triamese Separation Test HST 284-0," Convair Aerospace Division of General Dynamics Aeroballistics Technical Note TN-69-AE-08, 10 December 1969.
3. M.J. Hurley, "Digital Program P5255, A Six-Degree, Multiple-Body Separation Simulation for Hinged and/or Linked Lifting-Entry Vehicles," Volumes I and II, Convair Aerospace Division of General Dynamics, Report GDC-ERR-1377, December 1969.
4. M.J. Lanfranco, "Wind-Tunnel Investigation of the Separation Maneuver of Equal-Sized Bodies," AIAA Paper 70-260, presented at AIAA Advanced Space Transportation Meeting, Cocoa Beach, Florida, February 1970.
5. M.J. Hurley and M.J. Lanfranco, "Separation Dynamics of Multibody Clusters of Hinged and/or Linked Lifting--Entry Vehicles," presented to the Seventh Space Congress, Cocoa Beach, Florida, April 1970.
6. R.H. Schuett, M.O. Clark, and M.J. Hurley, "Space Shuttle Staging Dynamics," as contained in NASA Technical Memorandum NASA-TM X-52876, "Space Transportation System Technology Symposium," Volume II, "Dynamics and Aeroelasticity," July 15-17 1970, pp 123-142.
7. F.E. Jarlett, "Separation System Trade Study," Convair Aerospace Division of General Dynamics, Report 76-546-10-002, November 1970.
8. J.M. De Bevoise, "Aerodynamic Interference Between Parallel and Staged Winged Space Launch Vehicles During Separation," Convair Aerospace Division of General Dynamics, Report GDC-ERR-1566, December 1970.
9. G.W. Carrie and M.J. Hurley, "Space Shuttle Separation System Analysis, A Capability Assessment," Convair Aerospace Division of General Dynamics Report 76-549-4-172, June 1971.
10. M.J. Hurley, "Booster Recovery Following Premature Space Shuttle Stage Separation," presented to the NASA Space Shuttle Aerothermodynamics Technology Conference held at the Ames Research Center, December 15 and 16, 1971.

STUDY SUMMARY

CONCLUSIONS

- ABORT SEPARATION IS FEASIBLE FROM PRE-LIFTOFF THROUGH NORMAL STAGING
- STRUCTURE MASS PENALTY FOR ABORT SEPARATION CAPABILITY IS APPROXIMATELY 1,371 KILOGRAMS (3,023 LB.) PAYLOAD (4,849 LB. ON THE BOOSTER AND 2,155 LB. ON THE ORBITER)
- ADDITIONAL THERMAL PROTECTION TO PROTECT AGAINST PLUME IMPINGEMENT CAN ADD UP TO AN ADDITIONAL 81 KILOGRAMS (178 POUNDS) PAYLOAD EQUIVALENT (1,000 POUNDS ON THE BOOSTER)

MAJOR FUTURE CONSIDERATIONS

- EVALUATE AFT STRUT FOR LOAD CARRYING DURING ASCENT
- EVALUATE ELASTIC EFFECTS OF LINKS AND INTERNAL PRIMARY STRUCTURE
- DESIGN MECHANICAL INTERFACE TO DISCONNECT CLEANLY AT VARIOUS LINK ROTATION ANGLES
- INVESTIGATE REQUIREMENTS ON COMPUTER SOFTWARE TO SUPPORT BOTH NORMAL AND ABORT SEPARATION