Profitable New Aerospace Technology With Potential Industrial Application

NASA SP-5905(03)

Seals and Sealing Techniques

National Aeronautics And Space Administration

Small Business Administration

FOREWORD

It is possible that your company's economic growth can be increased through the use of new and improved materials, equipment, and techniques developed by the aerospace industry. The results of the research and development efforts can assist you in achieving lower unit costs, an improved competitive position, developing new products, and increasing the profits of your business. By assisting you in realizing these goals, NASA's and SBA's Technology Utilization Programs are helping to apply the results of the aerospace industry's research and development activities. Thus, the public earns an increased return on their investment in the space effort.

Additional technical information on the material presented can be requested by circling the appropriate number on the Reader Service Card which is included in this compilation.

Unless otherwise stated, neither NASA nor SBA contemplates any patent action on the technology described.

NOTICE This document was prepared under the sponsorship of the National Aeronautics and Space Administration. Neither the United States Government nor any person acting on behalf of the United States Government assumes any liability resulting from the use of the information contained in this document, or warrants that such use will be free from privately owned rights.

For sale by the National Technical Information Service, Springfield, Virginia 22151. $1.00

CONTENTS

SECTION 1. SEALING TECHNIQUES FOR CRYOGENIC FLUIDS

High-Pressure, Low-Temperature Electrical Connector Makes No-Leak Seal 1
Bimetallic Devices Help Maintain Constant Sealing Forces Down to Cryogenic Temperatures 2
Between-Bearing Shaft Seal: A Concept 2
Restrained, Pressure-Balanced Plastic Rubbing Ring 3
Cryogenic Seal Remains Leaktight During Thermal Displacement 4
Duct Flange Welded Seal: A Concept . . . 5
Temperature-Compensating Flange Seal 6
Valve Poppet Seal for Cryogenic Fluids 7
Seal for Cryogenic Fluid Pump 8
Seal Performs Over Wide Temperature Range: A Concept 8

SECTION 2. HIGH-PRESSURE APPLICATIONS

O-Ring Tube Fittings Form Leakproof Seal in Hydraulic System 10
Pressure-Welded Flange Assembly Provides Leaktight Seal at Reduced Bolt Loads 10
Dynamic Captive Plastic Seal 11
Large Diameter Metal Ring Seal Prevents Gas Leakage at High Pressures 12

SECTION 3. MODIFICATIONS FOR IMPROVED PERFORMANCE

Fluid Damping Reduces Bellows Seal Fatigue Failures 13
Seal Surfaces Protected During Assembly 13
Inflatable O-Ring Seal Eases Closing of Hatch Cover: A Concept 14
Rubber and Alumina Gaskets Retain Vacuum Seal in High-Temperature EMF Cell 14
Combination Spacer and Gasket Provides Effective Static Seal 15
Plug Replaces Weld Filler as Seal in Complex Casting 16
Static Seal to Accommodate Seat Tolerances: A Concept 17
Spiral-Grooved Shaft Seals Substantially Reduce Leakage and Wear 18
Vented Gasket Reduces Leakage into Vacuum Chamber 19
Formed-Flange Static Seal: A Concept 19
One-Piece, Self-Sealing Copper Seats and Seals 20
Double-Serrated Boss Seal 21
Seal for Insertable Probes 22
Integral Leakage Detection Port for Static Seals 22
Heel-Protected Seal: A Concept 23
Simplified Orifice Seal Assembly 24
Dual-Purpose Seal Adapter: A Concept 24
Universal Conical Seal for Tubing 25
Rubber Tubing Makes Hole-Plug Seal . . . 26
Terminal Hermetically Seals Metal-Sheathed Cable 26

SECTION 1. SEALING TECHNIQUES FOR CRYOGENIC FLUIDS

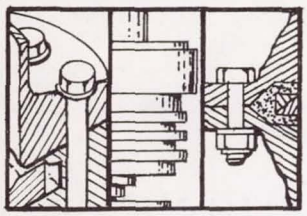

HIGH-PRESSURE, LOW-TEMPERATURE ELECTRICAL CONNECTOR MAKES NO-LEAK SEAL

An electrical feed-through connector is designed such that extremely high pressures and low temperatures contribute to its sealing properties. This capability is of particular value where electrically activated solenoid valves control the flow of cryogenic fluids. In previous designs, hermetically sealed valves involving an electrical conductor bonded to glass which in turn was bonded to the valve body, frequently failed due to the disparity in thermal contraction coefficients of the various materials.

In this design, a spherical glass poppet is molded around an integral beryllium-copper terminal screw. When assembled in a connector body seat that has been lapped for zero leakage, the poppet is held firmly seated by pressure from the cryogenic vessel. Additional seating force, provided by tightening the beryllium-copper terminal nut, helps prevent leakage at the poppet. A plastic seal provides a tight fit about the terminal screw. The plastic has a tendency to shrink at cryogenic temperatures; thus, the fit about the terminal screw becomes tighter as the temperature lowers, effecting a better seal. The bellville washer compensates for cold flow in the plastic seal by deflecting; a characteristic of bellville washers is that a lesser deflection will result in greater loading.

This device is useful in cryogenic industries where storage vessels require self-contained electrical connections within the tank. The device could also be used in refrigeration systems requiring electrical connections which must withstand environments having greatly varying temperature changes.

Source: J. F. Weakley of
North American Rockwell Corp.
under contract to
Manned Spacecraft Center
(MSC-276)

Circle 1 on Reader Service Card.

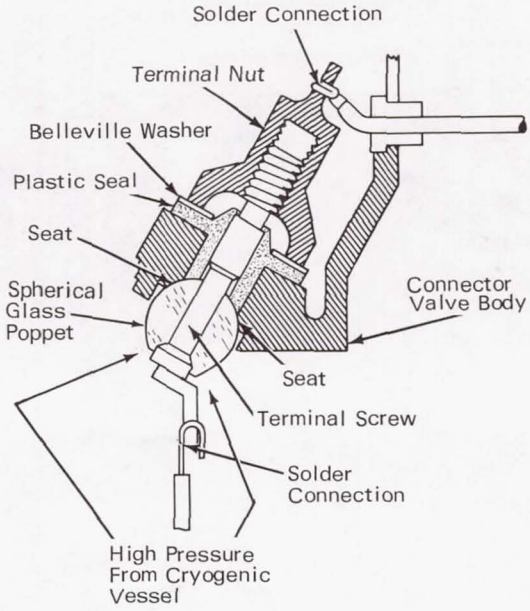

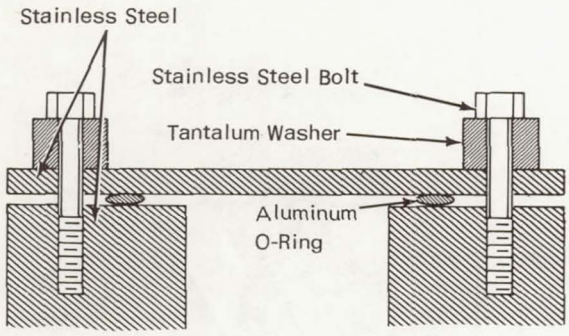

BIMETALLIC DEVICES HELP MAINTAIN CONSTANT SEALING FORCES DOWN TO CRYOGENIC TEMPERATURES

This device uses a bimetallic approach to compensate for the mismatch of thermal coefficients of expansion existing in a seal made of stainless steel and aluminum.

Two pieces of stainless steel are vacuum sealed using an aluminum O-ring compressed with stainless steel bolts. Since aluminum has a greater thermal coefficient of expansion than stainless steel over the critical distance of the compressed O-ring that separates the two surfaces being sealed, the aluminum will contract faster than the stainless steel in passing from room to cryogenic temperature. Compensation for this factor is effected by introducing a washer material, such as tantalum, which has a lower thermal coefficient of expansion than stainless steel (see fig.). The washers are of sufficient thickness that the differential aluminum-stainless steel contraction is balanced by the stainless steel-tantalum differential expansion. This forces the one sealing surface to remain in contact with the aluminum O-ring, with only the original contact pressure.

Source: W. R. DeBoskey of
Melpar, Inc.
under contract to
Marshall Space Flight Center
(MFS-800)

Circle 2 on Reader Service Card.

BETWEEN-BEARING SHAFT SEAL: A CONCEPT

A conceptual turbopump seal assembly can be placed between the bearings to reduce the shaft overhang length and overall turbopump length. A rotating end cap is placed around the turbine end bearing to prevent leakage into the turbine and to support the mating ring. The end cap also acts as a support for a mating ring located between the pump bearings. The turbine end bearing, supported by a sleeve of smaller inside diameter than the mating ring, passes inside the mating ring. The nose-riding seal is located

between the bearings, which are lubricated by the pumped fluids. The shaft seal leakage gas is separated from the turbine gases by a double labyrinth seal that incorporates an intermediate purge and is located at the outside diameter of the rotating cap. This arrangement removes the seals from the hot turbine region and results in a significant reduction in turbopump overall length.

Source: R. B. Furst of
North American Rockwell Corp.
under contract to
Marshall Space Flight Center
(MFS-18179)

Circle 3 on Reader Service Card.

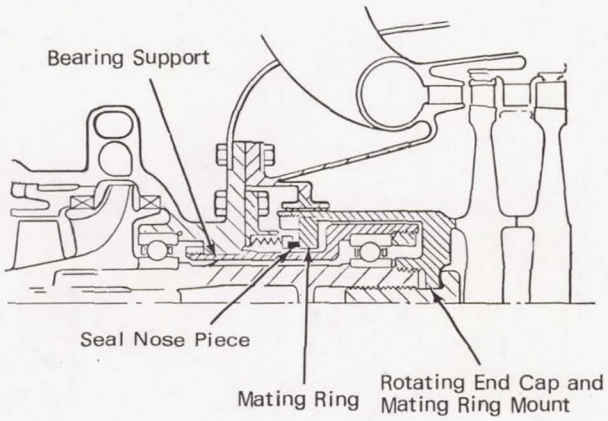

RESTRAINED, PRESSURE-BALANCED PLASTIC RUBBING RING

A plastic rubbing ring locked within a metal housing provides dimensional stability when the ring is subjected to cryogenic temperatures. The metal housing contains vent passages which are used for pressure balancing under high fluid pressure conditions. Previously, when plastic was required because of its superior rubbing characteristics with close-fitting seals or other components, cold flow of the plastic was encountered, causing an interference fit which resulted in looseness of the ring.

The relatively thin sections of the rubbing ring are locked into a metal housing with only the rubbing portion exposed. The stronger metal housing controls the dimensional stability and determines the thermal contraction rate of the ring at cryogenic temperatures. Under high fluid pressures, the loading and deflection, which result from pressure differentials, are minimized by pressure balancing using the controlled vent passages in the metal housing.

Source: R. E. Burcham of
North American Rockwell Corp.
under contract to
Marshall Space Flight Center
(MFS-2152)

Circle 4 on Reader Service Card.

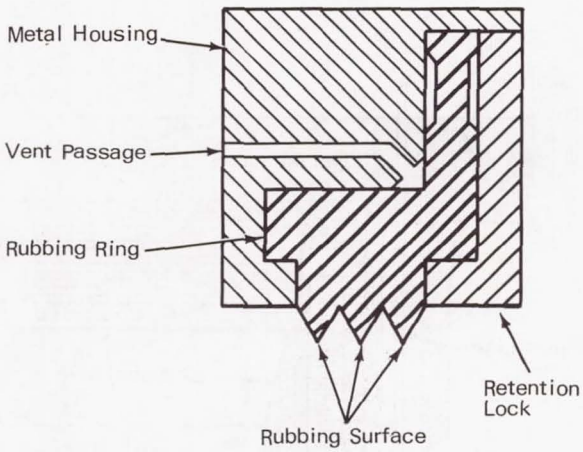

CRYOGENIC SEAL REMAINS LEAKTIGHT DURING THERMAL DISPLACEMENT

In a cryogenic bubble chamber, the plastic chamber lens displacement rate, versus that of its mating chamber surfaces, is compensated for by a new composite seal.

The device (see fig.) has an outer seal consisting of a single-convolution aluminum expansion ring bonded to the lens outer surface, and an inner seal consisting of a resin-filled aluminum U-ring bonded to the lens inner surface. The outer seal, which performs the critical task of isolating the cryogenic liquid from the vacuum space, maintains its seal by bending axially and sliding during both radial and axial lens movement. The inner seal maintains sliding seal contact during radial expansion or contraction of the lens.

The aluminum U-ring (inner seal) is bonded to the lens, and bears on a silver-indium ring locked to the chamber body. The silver-indium ring, which is initially round, is squeezed into a V-shaped groove that contains a slippery filler ring made of woven fabric coated with resin. This filler ring supports the legs of the U-ring to permit the application of a large sealing force, but is slippery enough to allow a relative radial displacement between the upper and lower U-ring legs.

The right flange of the convoluted aluminum expansion ring (outer seal) is bonded to the lens with the U-shaped convolution extending between the lens and the body. The left flange rests on a lead ring which is locked to the chamber body by an interlocking annular V-rib and groove arrangement. A notched ring rests on the outer surface of the convoluted ring, and a spring ring bears on the notched ring under pressure from a series of loading screws.

When the lens expands or contracts radially, the right flange of the aluminum expansion ring which is bonded to and therefore moves with the lens, slides along the lower surface of the notched ring. Simultaneously, the aluminum R-ring on the lower lens surface flexes at its base to allow radial shifting of one leg in relation to the other. This shifting occurs because the upper leg is bonded to the lens and

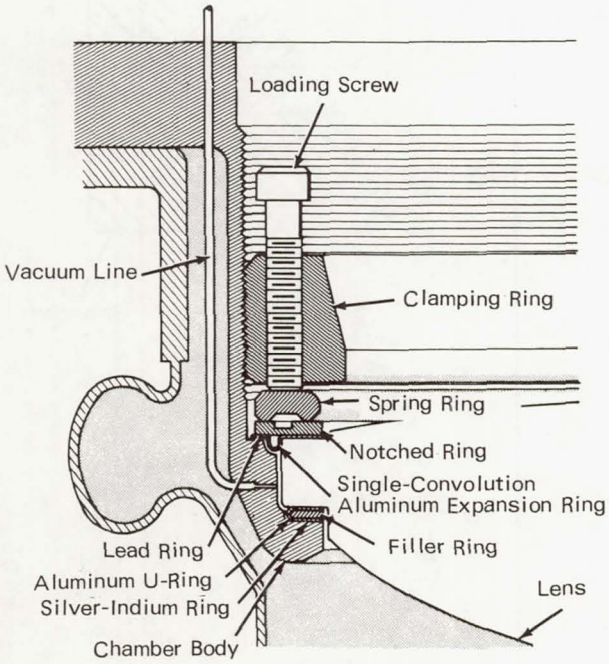

the lower leg tends to stick to the silver-indium ring.

As the lens displaces axially, the convoluted ring (outer seal) and notched ring follow this movement by bending with respect to their left-hand portions, which are clamped solidly to the body. This bending is possible because of the thin section in the notched ring. The right lobe of the spring ring follows the bending notched ring, and maintains suitable sealing pressure because the rounded lobe tends to roll on the notched ring surface.

The two lobes of the spring are eccentric with respect to the loading screw centerlines. The left lobe, which is nearer the screw centerlines, exerts more axial force than the right lobe when the screws are tightened. The smaller force of the right lobe allows radial slippage of the U-ring and convoluted expansion ring. The greater force of the left lobe maintains a positive seal between the body, the lead ring, and the expansion ring. Any chamber atmosphere which does leak past the U-ring (inner seal) is evacuated by a vacuum line.

Additional details are contained in U.S. Patent No. 3,238,574, which is available from U.S. Patent Office, price $0.50.

Source: K. B. Martin, E. G. Pewitt,
and T. H. Fields of
High Energy Division
Argonne National Laboratory
(ARG-96)

DUCT FLANGE WELDED SEAL: A CONCEPT

A conceptual method of sealing a spherical, self-aligning flange in cryogenic service involves welding formed sheet stock together to form a seal. The conventional gaskets previously used sometimes resulted in leakage. The proposed seal has potential application in installations where zero-leakage joints are required.

The configuration and construction of the welded seal are shown in Figures 1 and 2. The seal is fabricated by welding or brazing formed sheet stock to each of the mating spherical flanges. The sheets are placed so that they

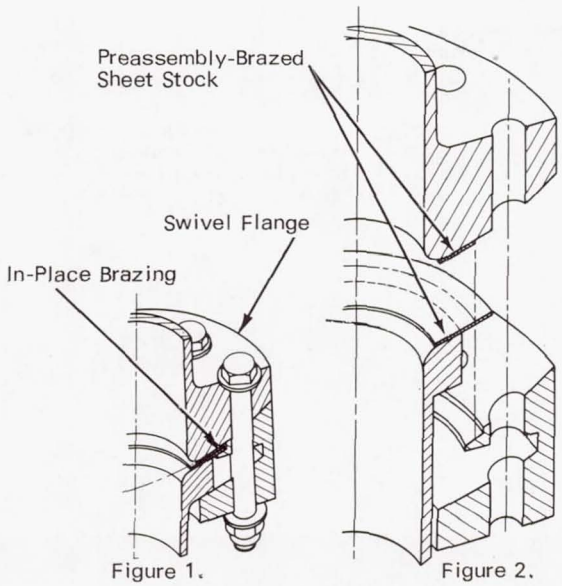

Figure 1. Figure 2.

extend outside the flange diameter. The excess metal is then trimmed off and the sheets are welded or soldered together, sealing the flange.

Source: J. D. McGroarty of
North American Rockwell Corp.
under contract to
Marshall Space Flight Center
(MFS-2156)

Circle 5 on Reader Service Card.

TEMPERATURE-COMPENSATING FLANGE SEAL

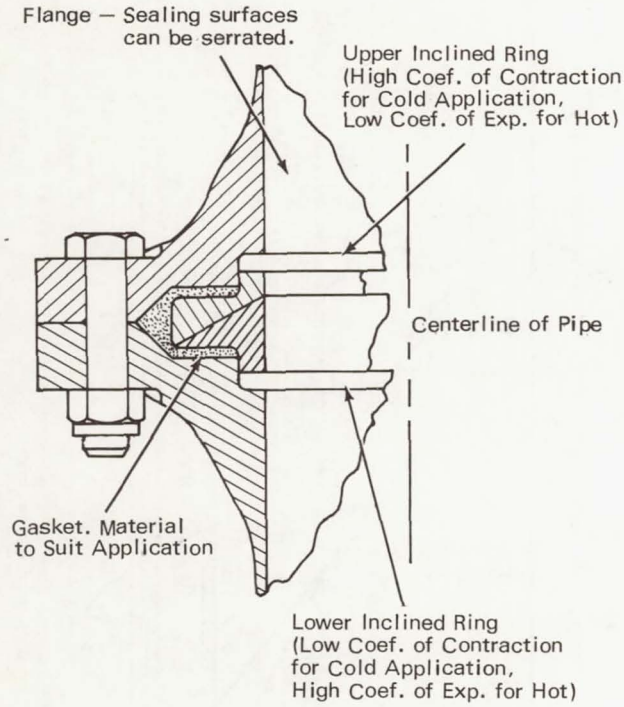

Through the proper choice of materials and the closing angle of incline, this seal can tolerate any range of temperatures (room temperature to cryogenic and room-to-elevated) likely to be encountered in normal industrial applications.

The sketch shows a typical application in which the valve is used to pass liquid oxygen, which is always at cryogenic temperatures.

Due to compatibility, the only plastic materials suitable for the gasket are PTFE or Kel-F. Although both of these materials are subject to cold flow under load at room temperatures, such action is precluded here because the gasket is completely trapped within the cavity by the flange and the inclined rings. When the connection is chilled down, the gasket, which has a contraction coefficient that is much greater than that of the metal, tends to shrink away from the sealing surfaces of the flanges, and causes a leak.

However, if the lower ring were made of a steel with a very low coefficient of contraction, it would contract very little. If the upper ring were made of aluminum, it would contract considerably more than the steel ring. Under these conditions, as the upper ring contracts diametrically, it must move up the inclined plane. By selecting the proper angle, the upper ring can take up the amount of shrinkage of the gasket, keeping it tight against the flanges. Conversely, for high temperature application, the lower ring should be made of a material with a high coefficient of expansion and the upper ring of a low coefficient of expansion material.

The novel feature of the invention is the use of the inclined rings which keep the load on the gasket constant and/or increasing through a wide temperature range.

Source: A. S. Cousin of
McDonnell Douglas Corp.
under contract to
Marshall Space Flight Center
(MFS-13392)

Circle 6 on Reader Service Card.

VALVE POPPET SEAL FOR CRYOGENIC FLUIDS

A 7075 T-73 aluminum alloy spherical body seal mating with a conical 304 stainless steel poppet sealing surface forms a reliable, low maintenance, low leakage seal for a liquid hydrogen (LH_2) tank valve serving a 20.32 cm (8 in.) line. Organic seal materials and flat metallic seals have both proven unsatisfactory in a liquid hydrogen environment.

The valve poppet (see fig.) is like a stopper or plug. Valve opening and closing is accomplished by pneumatic operations (not shown). The valve body is mounted in the bottom of the LH_2 storage tank, with the output (bottom) end attached to the drain pipe. The enlarged sketch shows the details of the sealing surfaces and the direction of flow of the LH_2 when the valve is opened.

Leakage rates of less than 1 scc/sec of GH_2 at 34.475 kN/m^2 (50 psi) after 300 open/close cycles in LH_2 have been recorded.

Source: V. A. Smith, L. D. Johnson,
R. L. Goudrey, and J. A. Aquilar of
Aerojet-General Corp.
under contract to
Space Nuclear Systems Office
(NUC-10081)

No further documentation is available.

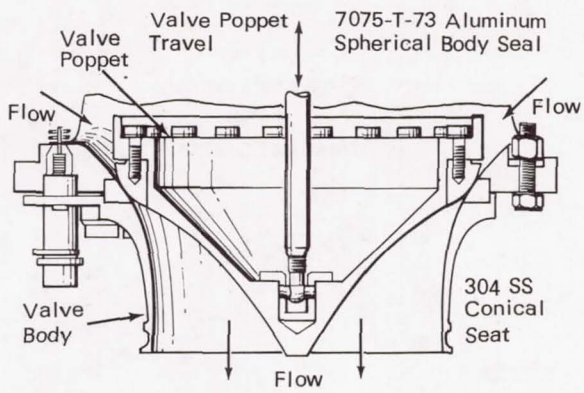

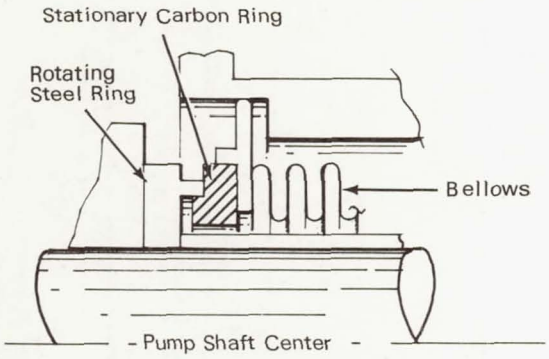

Manufacturer's Seal Design

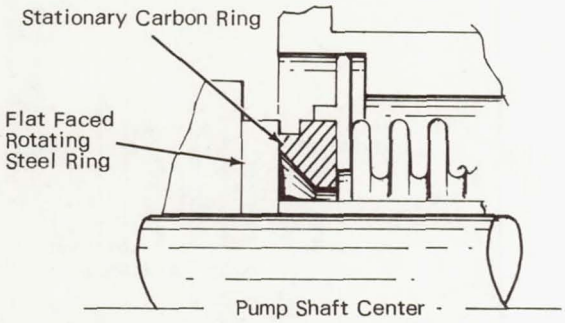

New Seal Design

SEAL FOR CRYOGENIC FLUID PUMP

A new seal design (see fig.) replaces the secondary sealing surface of a standard, commercially available seal with a taper-faced, stationary carbon ring. This presents only one sealing surface and appreciably extends the operating life of the seal. The previous design (see fig.) used in a cryogenic fluid pump would typically fail after 40 to 70 hours of operation. The new design, which was intended to have a minimum 300 hour service life, has performed satisfactorily for 500 hours.

Source: C. L. Smith of
North American Rockwell Corp.
under contract to
Marshall Space Flight Center
(MFS-18749)

Circle 7 on Reader Service Card.

SEAL PERFORMS OVER WIDE TEMPERATURE RANGE: A CONCEPT

A new three piece seal configuration (see fig.) embodies a split ring for minimum thermal expansion effects, a crescent joint for excellent sealing regardless of wear or circumferential thermal contraction, a coil spring expander with uniform radial expanding action, and a backing ring for free floating action independent of compressor piston cyclic side motion. The configuration was devised for improved sealing at cryogenic temperatures.

The sealing element is a flexible filled plastic ring with a patented crescent joint. The crescent joint is superior to conventional butt or lap joints in its ability to accommodate ring wear and geometry change while maintaining an excellent joint seal. Thermal contraction of the split ring during cooldown from room temperature to near liquid hydrogen temperature produces geometry changes similar to wear-associated changes. The split ring requires only moderate expander forces compared to full circle unsplit rings such as those used in several commercial "U" cup-style seals.

The coil spring expander provides uniform radial expanding force all along the inner surface of the piston ring. Several types of spring construction are applicable: One example would be to deflect the coils of a round wire spring into a flatted or skewed position, a second example involves direct radial compression of the coils of a wire or flat strip-wound coil spring. The springs provide controlled radial expanding force without the precise manufacturing control required in fabricating the flat spring expander. The flat spring expander must be formed to a precise non circular shape in order to provide reasonably uniform radial expanding force when compressed from its free elliptical appearance into a true circular confined installation. The proposed coil spring expander provides uniform radial expanding load without the tooling, setup, delivery, and possible nonuniform loads associated with the flat spring expander.

The full circle backing ring or support ring element provides the opposing contact surface for radially compressing the coil spring expander. The material for the backing ring can be selected to minimize or counteract relative thermal contraction effects in a given piston/cylinder/sealing assembly situation. The backing ring element allows the seal assembly to be radially free floating with respect to the piston. This is an important function inasmuch as most compressor pistons have some cyclic side loading and side motion.

The combination of features summarized above constitutes a unique sealing concept which is expected to provide effective sealing over a range of operating temperatures from 505 to 1.0 K (+450° to −450°F).

The seal configuration is significant in that no known seal can provide such broad temperature sealing capability along with so many cycles of operating life.

Source: R. E. Luybli and H. R. Sell of
Air Products and Chemicals, Inc.
under contract to
Marshall Space Flight Center
(MFS-21032)

Circle 8 on Reader Service Card.

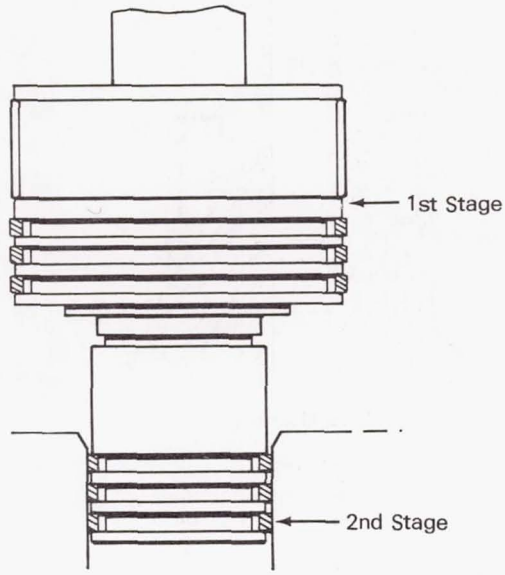

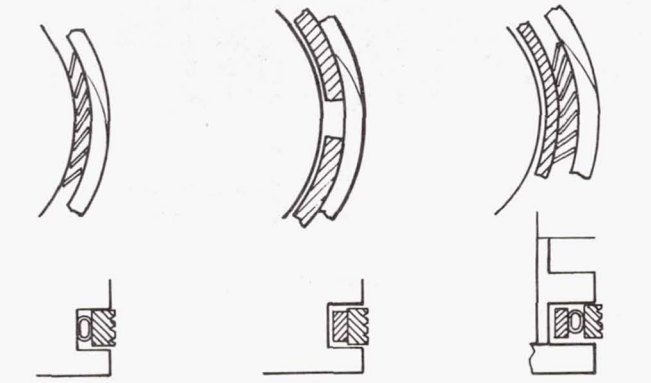

Coil Spring Expander | Flat Spring Expander | Floating Coil Springs

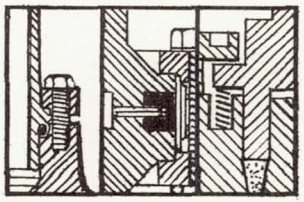

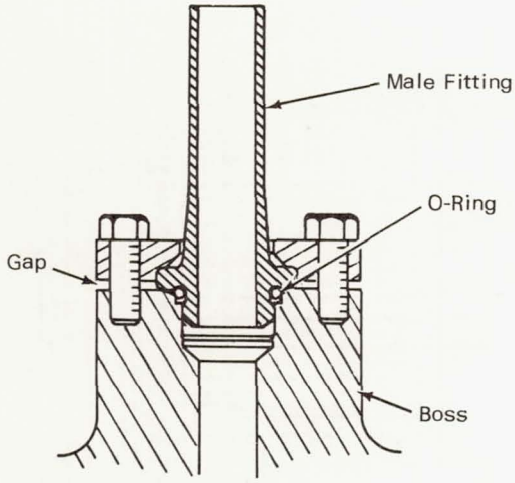

Boss Mounting

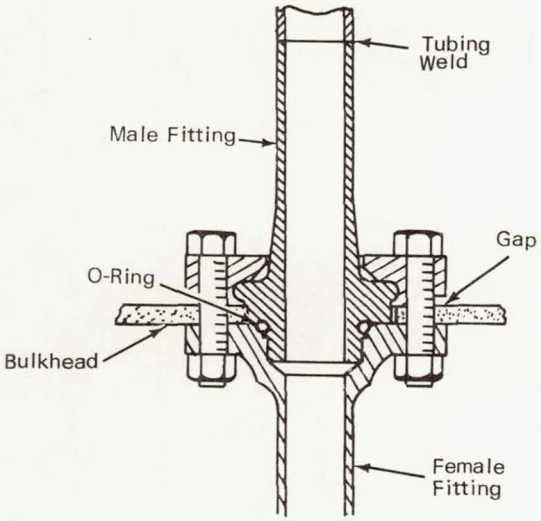

Bracket Mounting

O-RING TUBE FITTINGS FORM LEAKTIGHT SEAL IN HYDRAULIC SYSTEM

Specially designed fittings, welded to the ends of hydraulic system tubing and then mated, form a leaktight seal that uses only one O-ring at the joint. Standard flared fittings on the ends of tubing lengths to be joined present interfaces at the two ends where the fittings are coupled to a union. Previously, to provide leaktight joints at these interfaces, expensive, close-tolerance machining of the mating surfaces was necessary.

The new fittings have flanged male and female sealing surfaces incorporating an annular groove arrangement for a single O-ring between the flanges. The flanges are bolted together to produce an effective seal. Possible variations in fittings may include a means for bracket mounting, or for sealing directly to a component boss. Since the fittings are coupled at only one joint, they tend to be more reliable than standard fittings coupled to a union at two joints. With slight modification, the fittings can be adapted for use with liquids at cryogenic or elevated temperatures.

Source: North American Rockwell Corp.
under contract to
Marshall Space Flight Center
(MFS-481)

Circle 9 on Reader Service Card.

PRESSURE-WELDED FLANGE ASSEMBLY PROVIDES LEAKTIGHT SEAL AT REDUCED BOLT LOADS

Two sets of stainless steel split dies, containing annular projections on their inner surfaces, are inserted into recesses in the main flanges, which are made of stainless steel.

A connector assembly, consisting of ductile metal plates that are pressure welded between dies mounted in recessed flanges, provides a leaktight seal with relatively light bolt loading. Two round plates of type 2S aluminum are fusion welded to the outer peripheries of the

main flanges. An aluminum retaining ring is positioned inside the bolt circle and secured with setscrews to hold the dies in place. The ring has several viewing ports to permit visual inspection of the dies during the bolt tightening operation.

As the bolts are tightened under a specified torque, the soft aluminum plates are forced together between the dies to effect a pressure welded seal at the aluminum interfaces. Should the original tensile forces applied to the bolts become relaxed during service, the alternate load path provided by the geometry of the die rings minimizes the amount of displacement in the weld area.

To disassemble the connector, the bolted flanges and retaining ring are removed, and the main flanges are slightly separated to allow the welding dies to be removed and replaced with a set of cutting dies. When the bolts are retightened, the 2S aluminum plates are severed just inside the pressure weld, and the connector is disassembled.

To reassemble the connector, two other sets of welding dies with projections placed closer to the center of the connector are used. Cutting dies with a smaller radius are used to disassemble the connector a second time.

Source: A. J. Martenson et al of
General Electric Co.
under contract to
Marshall Space Flight Center
(MFS-640)

Circle 10 on Reader Service Card.

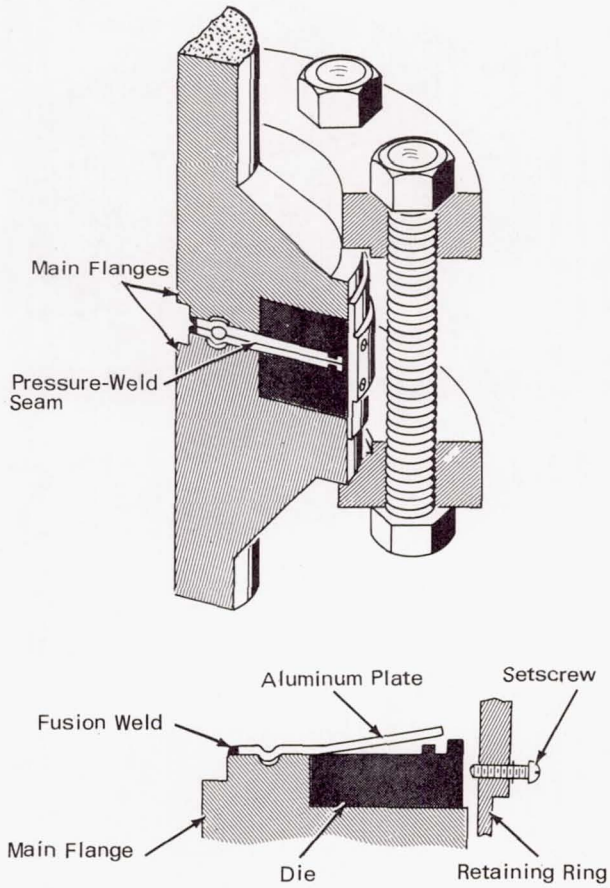

Detail, Lower Die Section

DYNAMIC CAPTIVE PLASTIC SEAL

A fluoroplastic material, held captive between valve sealing surfaces that approach optical flatness, provides zero leakage to a high-pressure line over a wide temperature range, when subjected to sufficient stress. This technique has been used to control fluids at pressures of 86,187 kN/m^2 (12,500 psi) through a temperature range of 530 to 14.4 K (+500° to −430°F).

In a typical application in a modified globe valve, a fluoroplastic sealant material is en-

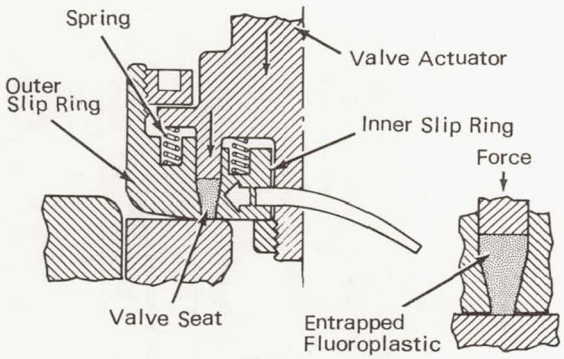

trapped between individually spring-loaded inner and outer slip rings, the valve sealing surface, and the valve actuator. Sealing pressure is applied by the valve actuator to the fluoroplastic, which is in a totally confined pocket. Because the plastic material has no escape, and since the combined temperature and actuator pressure are below the embrittlement compressive strain point of the fluoroplastic, it becomes an incompressible fluid having high viscosity and surface tension. This sealing technique makes the use of "superfinished" valve sealing surfaces unnecessary, since the captive fluoroplastic is forced into any surface imperfections, achieving a no-leakage seal.

Source: E. O. Dryer of
North American Rockwell Corp.
under contract to
Marshall Space Flight Center
(MFS-12988)

Circle 11 on Reader Service Card.

LARGE DIAMETER METAL RING SEAL PREVENTS GAS LEAKAGE AT HIGH PRESSURES

A grooved, metal ring seal containing elastomer O-rings, installed between the access cover and the neck of a high pressure storage bottle, provides a reliable seal for gas storage up to pressures of 34,475 kN/m^2 (5,000 psi). As the access cover is tightened, the metal ring and the O-rings are compressed, extruding the O-rings from the grooves so that they make contact with the mating faces of the access cover and storage bottle. This sealing technique can be readily adapted to the chemical, petroleum, medical supply, and related industries where high pressure storage bottles and tanks are used.

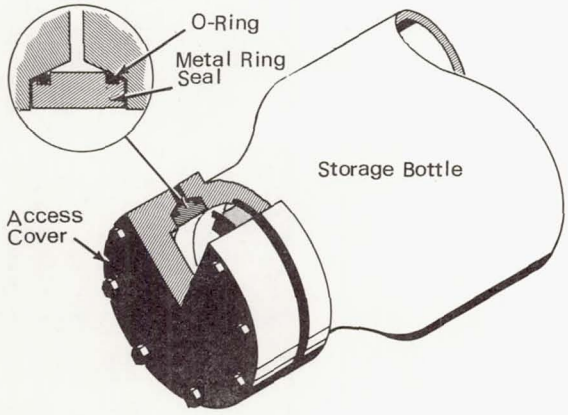

Source: J. H. Middelkoop of
North American Rockwell Corp.
under contract to
Marshall Space Flight Center
(MFS-1064)

Circle 12 on Reader Service Card.

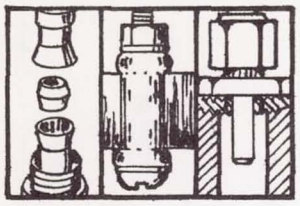

FLUID DAMPING REDUCES BELLOWS SEAL FATIGUE FAILURES

Bellows fatigue failures have been significantly reduced by a system of interconnected bellows in which the intervening cavities are filled with a fluid that reduces the periodic deflection amplitude of the sealing bellows.

The system is made up of four metal bellows, consisting of a main bellows pair and damping bellows pair. Each pair has a cavity filled with the damping fluid, and the pairs are interconnected by an orifice in a member of the main seal body to permit the fluid to flow freely between them. The main bellows contracts and expands with the seal as it vibrates. This movement of the main bellows causes the fluid to flow back and forth through the orifice. The flow in turn exerts a counterforce that reduces the amplitude of the deflection and lessens the incidence of fatigue failure.

Different fluids may be used according to environmental conditions. For example, liquid nitrogen may be used in cryogenic applications, oil for room temperature, or liquid metals for high temperatures.

Source: North American Rockwell Corp.
under contract to
Marshall Space Flight Center
(MFS-565)

Circle 13 on Reader Service Card.

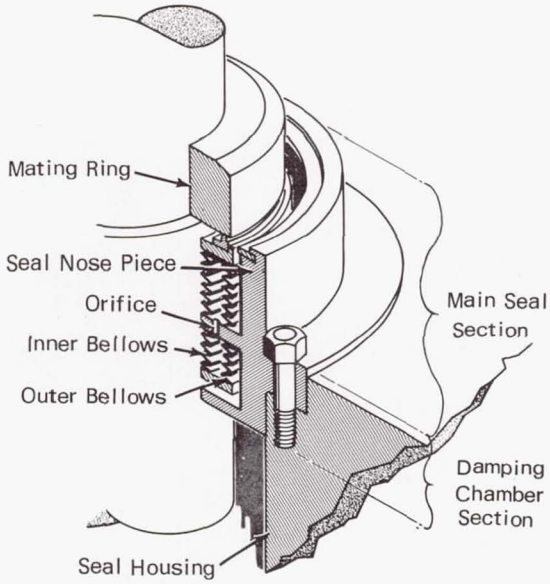

SEAL SURFACES PROTECTED DURING ASSEMBLY

To protect the highly polished seal surfaces at the entrances of tapped bosses, a surface protection device is placed over the polished surface and removed after the fitting has been engaged with the boss threads.

A split seal surface protector fits over the chamfered portion of the boss while the threaded male fitting is inserted into the tapped boss against spring tension. When several threads have become engaged, the surface protector is withdrawn by pulling its attaching pins and removing the two separated halves. The male fitting is then torqued as required to effect the seal.

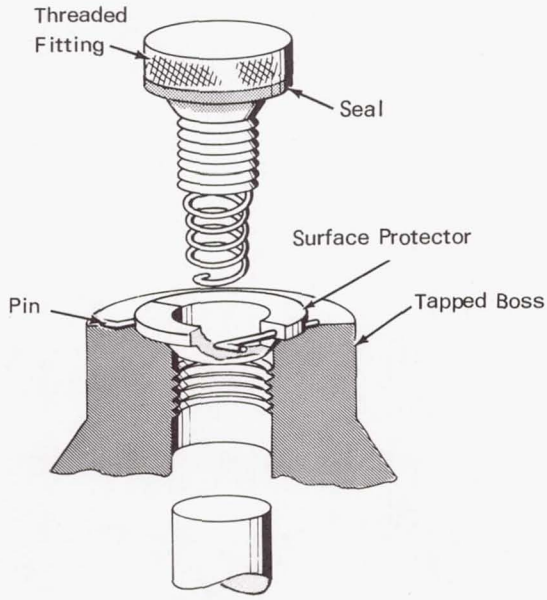

Although the sketch depicts an application involving a K-seal surface, the technique lends itself to a variety of seal types.

Source: G. L. Richardson of
Aerojet-General Corp.
under contract to
Space Nuclear Systems Office
(NUC-0067)

No further documentation is available.

INFLATABLE O-RING SEAL EASES CLOSING OF HATCH COVER: A CONCEPT

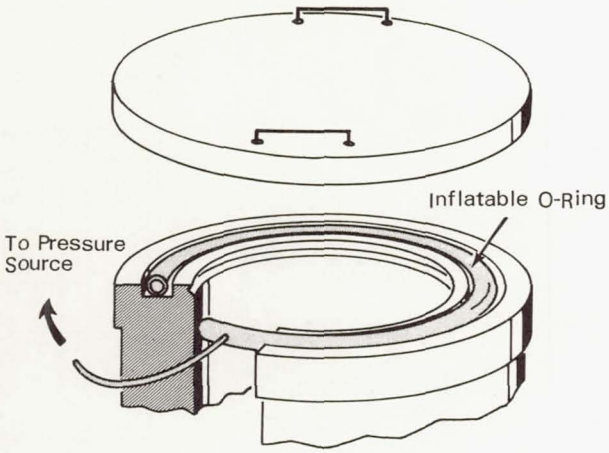

An inflatable O-ring inserted between the sealing surfaces may ease the closing and opening of a rotary-type hatch cover. This would provide a positive means of sealing without the manual application of a large compressive force during opening or closing.

Before the hatch cover plate is rotated to the closed position, the hollow O-ring is deflated. After the cover plate is closed, the O-ring is inflated, using a gas pressure source, to effect a positive seal, even in the presence of surface irregularities. To disengage the cover plate, the hollow O-ring is first deflated.

Source: K. J. Neary of
North American Rockwell Corp.
under contract to
Manned Spacecraft Center
(MSC-740)

No further documentation is available.

RUBBER AND ALUMINA GASKETS RETAIN VACUUM SEAL IN HIGH-TEMPERATURE EMF CELL

A silicone rubber gasket and an alumina gasket, each held between two flanges that extend outward from the edges of the upper and lower halves of an EMF cell, preserve the cell's vacuum seal while electrically isolating its two halves.

A heat dissipating flange extends horizontally from the bottom edge of the upper cell half,

and a similar flange extends from the upper edge of the lower cell half. An alumina gasket is positioned between the upper and lower flanges so that its inner edge is close to the inner surfaces of the cell halves. A silicone rubber gasket is also placed between the flanges, but outside the alumina gasket. Bolts holding the two cell halves together pass through insulating sleeves in the flanges but outside the silicone rubber gasket position.

The alumina gasket serves as the liquid seal and at the same time electrically separates the upper and lower cell halves. The fused salt electrolyte in contact with the alumina gasket may penetrate along its edges, but such penetrations will freeze-seal themselves so that neither the electrical insulating effect nor the vacuum seal maintained by the silicone rubber gasket is disturbed. The silicone rubber gasket is far enough removed from the electrolyte so that most of the heat transmitted along the flanges is dissipated to the outside atmosphere before it reaches the rubber gasket.

Source: J. C. Hesson
Chemical Engineering Division
Argonne National Laboratory
(ARG-17)

No further documentation is available.

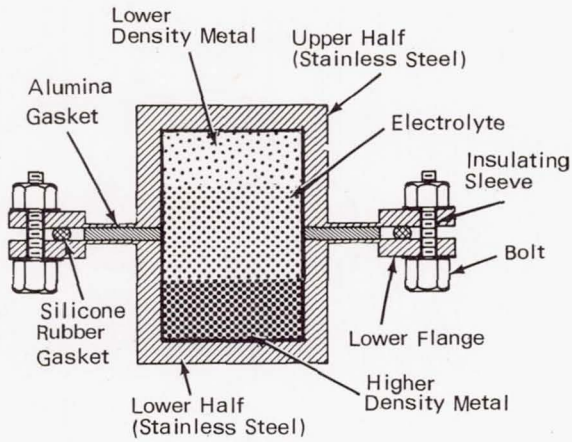

COMBINATION SPACER AND GASKET PROVIDES EFFECTIVE STATIC SEAL

A new device consists of a closely machined steel ring with narrow sealing lands on both faces and a thin coating of a commercially available halocarbon (trifluorochloroethylene) polymer. The spacer-seal permits high unit loading on the sealing lands with a nominal torque on the clamping bolts. Conventional practice has been to use one or more spacers with a separate gasket placed in contact with each face of each spacer. An assembly consisting of one spacer and two gaskets would present at least four potential leak paths and would permit only relatively low unit loading on the sealing lands.

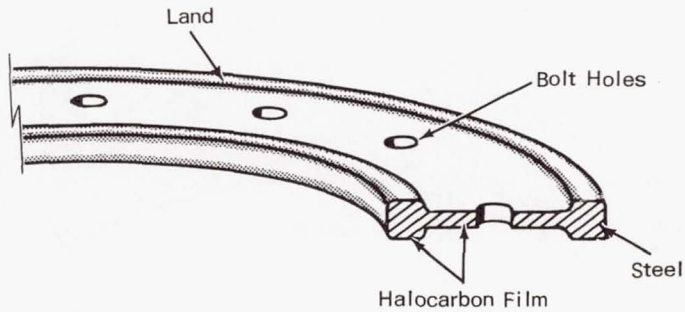

In this design, disks of a selected thickness steel-plate stock are machined and ground to form spacer rings with narrow sealing lands on both faces of each ring. The rings are dispersion-coated with a uniform film of the halocarbon polymer, the film is cured, and the sealing lands are lapped to eliminate surface irregularities and voids.

The cold-flow characteristics of the polymer film enable it to fill minor voids in mating surfaces. Several spacer-seal rings of preselected thicknesses may be stacked as required to compensate for different clearances between mating surfaces. Because of the intimate contact between the polymer films, a spacer-seal stack will have only two potential leak paths. The sealing lands will also bear higher unit loads, which will ensure more positive sealing at all points of contact.

Source: F. B. Jones of
North American Rockwell Corp.
under contract to
Marshall Space Flight Center
(MFS-1397)

Circle 14 on Reader Service Card.

PLUG REPLACES WELD FILLER AS SEAL IN COMPLEX CASTING

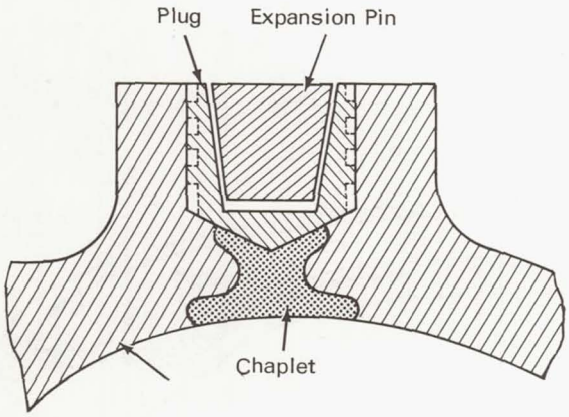

Casting chaplets used in casting a complex convolute can be drilled out and an expandable metal plug (see fig.) inserted to provide the seal, rather than drilling and back-filling with weld metal.

The chaplets are small blocks which support the mold core used for casting a complex convolute. These chaplets become an integral part of the housing. But they frequently fail to fuse completely with the poured metal, and a leakage path results. Previously, the outer end of the chaplet was drilled out and then backfilled with weld metal. This is an expensive process, requiring X-ray inspection to assure

weld integrity. In addition, warpage sometimes occurs during welding, and subsequent heat treatments are required to restore the casting to design dimensions.

In the new technique, the mold is supported in the normal manner with chaplets. Following the pouring process, the casting is heat treated to the desired condition. Then the end of each chaplet is drilled out so that a close-fitting expandable plug can be inserted.

Source: R. L. Goundrey and C. L. Harris of
Aerojet-General Corp.
under contract to
Space Nuclear Systems Office
(NUC-0049)

Circle 15 on Reader Service Card.

STATIC SEAL TO ACCOMMODATE SEAT TOLERANCES: A CONCEPT

A proposed static seal has design characteristics that permit compensation for flange separation and flange-groove tolerances without large seal-leg deflections. With present seals, significant deflections, due to tolerances and flange separation, cause considerable deviation from design requirements. In the suggested design, two deflections take place: one in the seal legs, resulting in tip loading, and the other at the rear of the seal. The deflection in the rear of the seal allows for tolerances and flange separation by keeping the tip loading practically constant. Both the legs and back of the seal are pressure actuated, as illustrated.

Source: J. F. Hardy, III, of
North American Rockwell Corp.
under contract to
Marshall Space Flight Center
(MFS-1854)

Circle 16 on Reader Service Card.

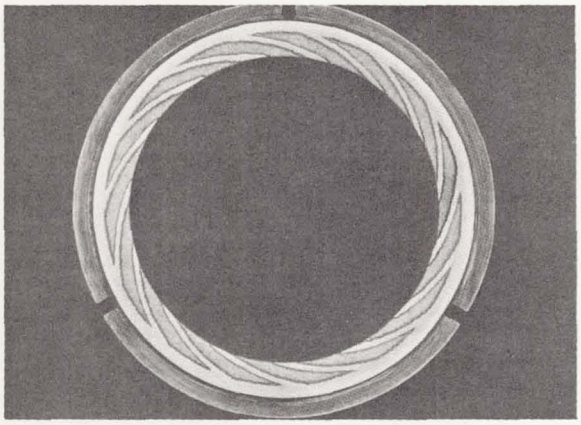

SPIRAL-GROOVED SHAFT SEALS SUBSTANTIALLY REDUCE LEAKAGE AND WEAR

Rotating shaft seals for use in space power systems must operate reliably for periods of several years without maintenance or attention. Characteristic requirements include minimal leakage and wear, simplicity of design, minimal weight, adaptability to extreme temperatures, and capability of containing pumped fluids such as liquid sodium or potassium. Conventional shaft seals are inadequate because leakage rates are too high. Thermal and pressure distortions result in rubbing contact, which causes wear, scoring, and increased leakage rates.

A new seal, which incorporates spiral grooves (see fig.) in one or both of the opposing seal faces, overcomes these problems. The grooves induce a pumping action, which displaces the intervening fluid radially inward toward the shaft and counters the centrifugal forces which tend to displace the fluid outward. The net effect maintains hydrodynamic separation of the seal faces, thus preventing seal face contact and wear.

Spiral grooved seals have been tested against comparable conventional seals for use in a liquid sodium pump operating at over 977.5 K (1300°F) and 138 kN/m^2 (20 psig). The results showed that:

(1) The spiral grooved seal leak rate was less than the detectable limit, with generally no detectable increase in leakage after prolonged operation. By comparison, conventional seals had appreciable initial leak rates which as much as doubled with prolonged operation.

(2) The spiral grooved seals showed negligible wear at the completion of the test run.

(3) Static leakage of the spiral grooved seals was comparable to that of the conventional seals.

Source: T. N. Strom, L. P. Ludwig,
G. P. Allen, and R. L. Johnson
Lewis Research Center
(LEW-10397)

Circle 17 on Reader Service Card.

VENTED GASKET REDUCES LEAKAGE INTO VACUUM CHAMBER

A gasket with a vacuum vent facilitates testing liquid hydrogen installation valves. Liquid or gaseous hydrogen that previously leaked past the inner rim of the gasket from the main fluid supply line can now be removed. Thus, when liquid hydrogen valves are tested in a vacuum chamber, no fluid leaks into the chamber through the flanges that attach the valve to the plumbing. Vented gaskets may be used in any installation where zero leakage to the surrounding area is a requirement, and where a low pressure source is available.

The vented gasket is a modified standard gasket constructed from a material which is suitable for use at cryogenic temperatures. Two slots are cut out of the gasket, midway between the inner and outer rims, as shown in Figure 1. The spaces between the slots are notched to permit flow between them. A vent hole is drilled through one of the flanges, in line with the slot, as shown in Figure 2. The vent hole is connected to a low pressure source by means of a standard pipe fitting. If the pressure applied to the vent is lower than that of the vacuum chamber, leakage occurring from the main line past the inner rim of the gasket will be drawn off through the vent.

Source: H. Brittan of
General Dynamics/Convair
under contract to
Lewis Research Center
(LEW-362)

No further documentation is available.

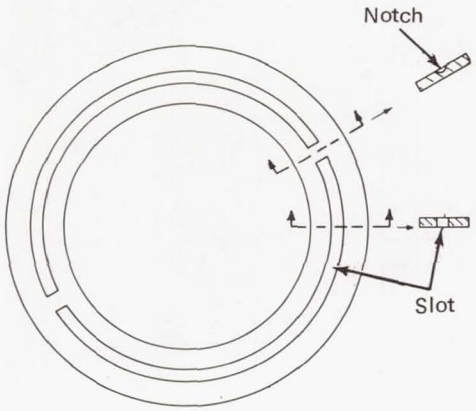

Figure 1.

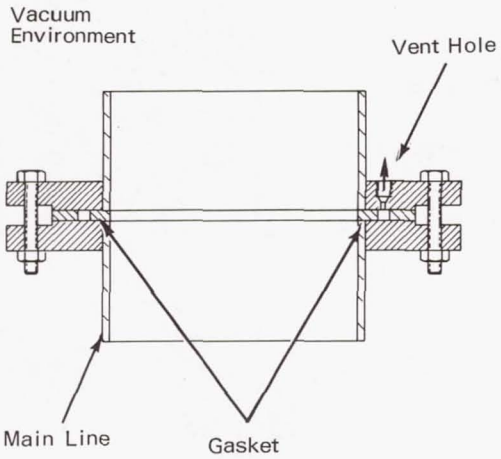

Figure 2.

FORMED-FLANGE STATIC SEAL: A CONCEPT

A formed, sheet-metal sealing-member insert can increase the sealing capabilities of Naflex seals, eliminating such problems as insufficient flexing or tip load, and creep relaxation.

The conceptual lip seal insert is constructed from formed sheet metal, with the sealing lips spaced widely apart, as shown in the figure (part

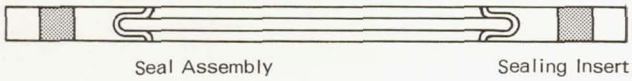

Seal Assembly Sealing Insert

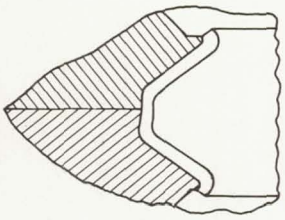

A

Spin, heat treat, trim.

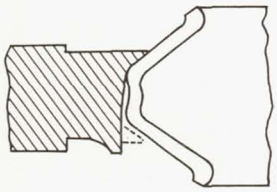

B

Roll into spacer.

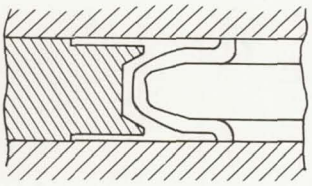

C

Preset between smooth, flat, hard, parallel plates. Coat or plate after preset.

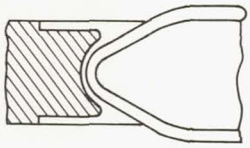

D

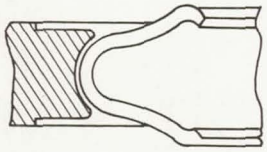

E

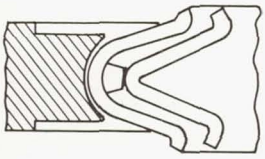

F

Alternate Inserts (D,E,F)

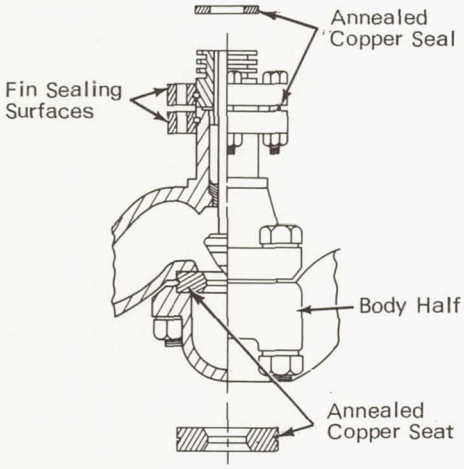

A). The seal is then placed into the spacer (see part B). The insert is preset between the two plates which permit about 0.8% yield (see part C), and the surface of the insert is placed in compression. After the preset operation, the insert is coated or plated to prevent damage. Flexibility of the insert is increased by the deflection of the web joining the two legs, as a stressed member.

Parts D, E, and F show some of the various insert cross sections that may be used. The seal can be effected by a machined surface as in part A, or a rolled surface as in parts D and E. In either case, the curvature of the sealing lip can be slight to spread the contact, or sharp to insure plastic deformation. In addition, multiple seal inserts can be arranged inside each other to give several contact areas and to improve the probability of bridging a surface defect, as shown in part F.

Source: F. A. Jennings of
North American Rockwell Corp.
under contract to
Marshall Space Flight Center
(MFS-755)

Circle 18 on Reader Service Card.

ONE-PIECE, SELF-SEALING COPPER SEATS AND SEALS

One-piece annealed copper valve seats and seals have been designed that reduce leakage problems in liquid fluorine and hot gas systems. Previously, the seats and seals were made of a combination of stainless steel and Kel-F materials. However, when the valves were used in liquid fluorine and hot-gas systems, the Kel-F, though fluorine stabilized, deteriorated quickly, causing leakage.

The annealed copper units are shown installed in a valve. The body half of the valves must be serrated and the fin sealing surfaces must be normalized in order to adapt the one-piece seats to standard valves. The use of these seats decreases the rework and replacement operations normally required, and extends the service

life of the valves in systems involving corrosive fluids.

Source: H. W. DeWitt of
North American Rockwell Corp.
under contract to
Marshall Space Flight Center
(MFS-1287)

Circle 19 on Reader Service Card.

DOUBLE SERRATED BOSS SEAL

A soft metal seal effectively seals against a cocked conical sealing surface. Previously, sealing difficulties were experienced when conventional seals were used with AND10050 boss sealing glands, due to manufacturing discrepancies between standard AN threaded fittings and the boss sealing glands.

The new seal (see fig.) consists of a solid ring of soft melleable metal. The top sealing surface has a series of concentric V-shaped grooves, with the top edges forming a flat plane. The bottom surface also has a series of concentric grooves, but the edges form a conical plane. The angle of the bottom conical plane approximates the angle of the conical sealing surface of the boss sealing gland.

When the seal is installed on the surface of the boss sealing gland and torque is applied on an AN814 union positioned above the seal, the seal shifts slightly to match the cocked position of the boss gland. The pressure on the seal causes the soft concentric sealing edges to form multiple gas-tight sealing barriers.

Source: J. H. Middelkoop
Marshall Space Flight Center
(MFS-815)

Circle 20 on Reader Service Card.

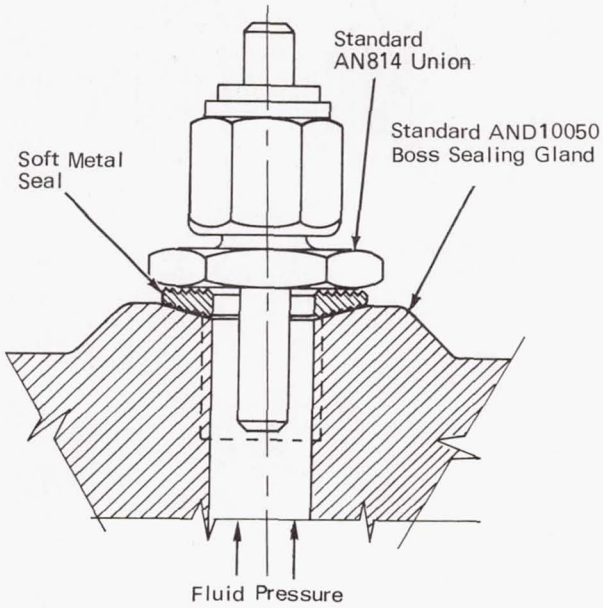

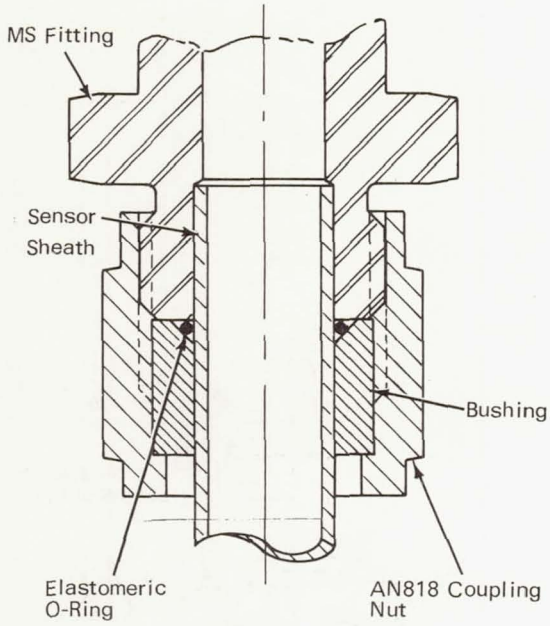

SEAL FOR INSERTABLE PROBES

A sealing gland uses a soft O-ring to seal and retain thermocouples or other variable immersion sensors, without damaging their protective sheaths by frequent adjustments of immersion depth. Previously, the surfaces of the probes were degraded due to frictional contact with the gland packing during immersion depth adjustments and during removal for calibration. The use of the O-ring significantly increases the life of the sensors.

The sealing gland assembly is shown in the figure. It consists of an MS fitting, modified by facing and counterboring the flare seat. A bushing is machined to provide the required O-ring deformation and cleranace for the sensor sheath, and a standard AN818 coupling nut and an elastomeric O-ring are included. The O-ring is made from a soft material, the nature of which depends on the specific sensor used. The sealing gland assembly may be secured to the vessel by welding, threading, brazing, or any other suitable method.

It is advisable to use a new O-ring each time the sensor is installed in order to avoid the tendency for the elastomeric O-ring material to cold flow under extreme deformation.

Source: R. R. Doubleday of
North American Rockwell Corp.
under contract to
Marshall Space Flight Center
(MFS-1524)

Circle 21 on Reader Service Card.

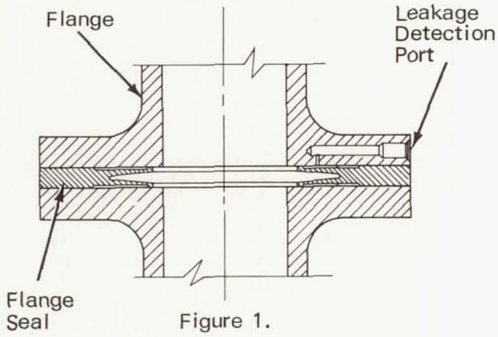

Figure 1.

INTEGRAL LEAKAGE DETECTION PORT FOR STATIC SEALS

A port for detecting leakage between primary and secondary sealing surfaces can now be located in the flange seal. Previously, the port was located in the flange, (see Figure 1) a practice which required considerable machining. In addition, the port location was often inaccessible, and the detection tube or pin was susceptible to being damaged or broken during removal.

The static seal leakage port (see Figure 2) is a permanent part of the flange seal.

Using the static seal as the location for the leakage detection port provides the following advantages: The flange design is simplified; the assembly weight is reduced; the seal design flexibility is increased; flange machining is reduced; and the assembly inspection and rejection rate is reduced.

Source: G. L. Dusenberry of North American Rockwell Corp.

Circle 22 on Reader Service Card.

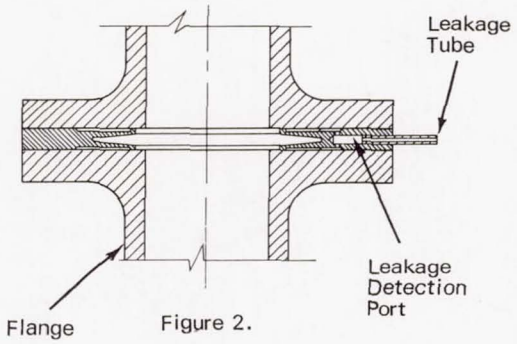

Figure 2.

HEEL-PROTECTED SEAL: A CONCEPT

A conceptual heel bumper can be attached to the outside diameter of a flange seal to protect the sealing surfaces from damage during handling prior to installation. Previously, seals were frequently scratched, nicked, or dented, with the result that they failed to maintain an adequate seal after installation.

To protect the contact portion of a flange seal, a heel bumper, made from PTFE, Kel-F, or a resilient metal, can be attached to the heel of the seal by welding, fitting, or the use of an adhesive. The heel bumper, (see Figure 1) receives the punishment that normally would injure the seal. When the seal is installed and the flange torqued, the bumper bends back, acting as a secondary seal (see Figure 2).

The heel bumper concept may be applied to seals of various configurations to insure that they retain reliable sealing surfaces.

Source: G. A. Peters and K. Warming of North American Rockwell Corp. under contract to Marshall Space Flight Center (MFS-1884)

Circle 23 on Reader Service Card.

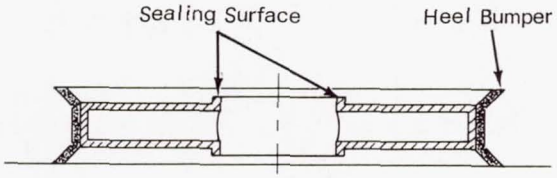

Figure 1.

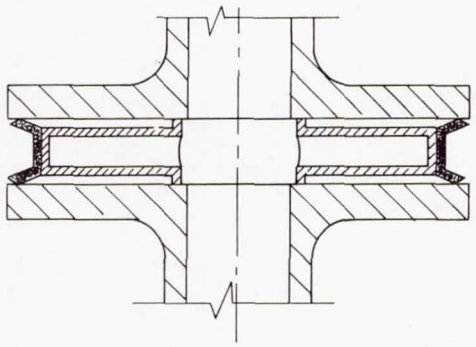

Figure 2.

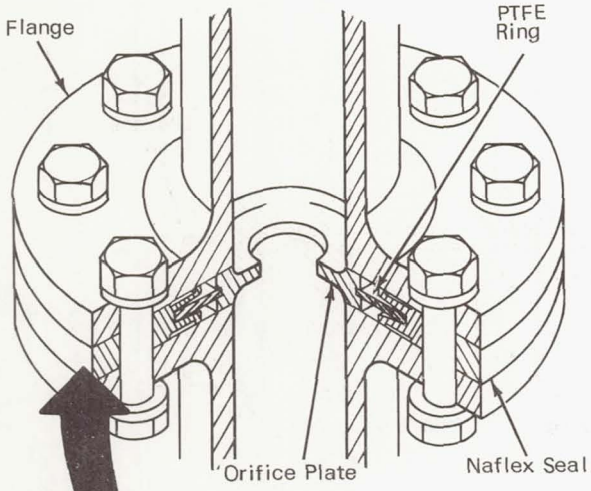

Figure 2.

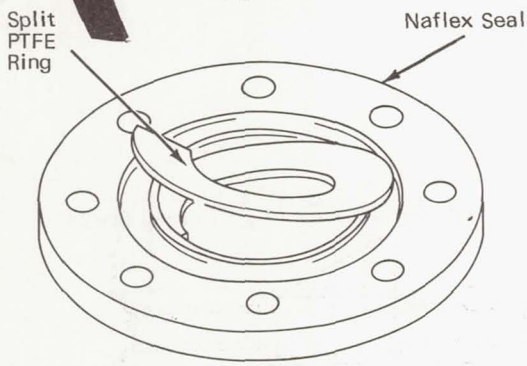

Figure 1.

SIMPLIFIED ORIFICE SEAL ASSEMBLY

A split PTFE ring can be used as a joining element between an orifice plate and a seal, in the flange assembly of a liquid coolant line. Previous assembly methods required elaborate machining and the use of adhesives, exposing sealing surfaces to possible damage.

The split PTFE ring is installed around the inside diameter of the seal, as shown in Figure 1. The ring is radially compressed until its outside diameter slips into the inner groove of the seal. The ring is then released and permitted to expand into the seal groove. Since the PTFE ring is pliable, the orifice plate can be forced through the ring until the ring engages the retaining groove on the circumference of the plate. The completed assembly with the flange installed is shown in Figure 2.

The assembly functions best when the orifice plate used is the same thickness as the seal, and when the PTFE split ring is replaced each time the orifice plate is changed.

Source: W. J. Mah of
North American Rockwell Corp.
under contract to
Marshall Space Flight Center
(MFS-2043)

Circle 24 on Reader Service Card.

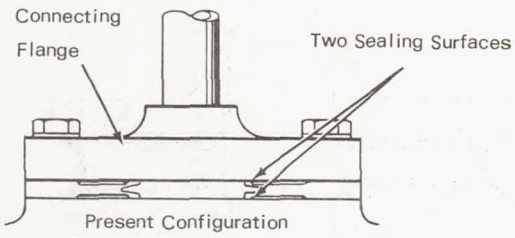

Present Configuration

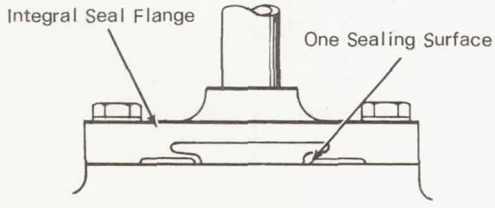

Proposed Configuration

DUAL-PURPOSE SEAL ADAPTER: A CONCEPT

A conceptual seal becomes an integral part of the adapter or flange, combining half of the typical V-seal configuration with the adapter. Installation is thereby simplified and sealing surface requirements are reduced by 50%. The proposed configuration (see fig.) would provide a one-piece, self-centering sealing plug or flange for static application in extreme environments, where higher reliability is required and space is limited.

Commercially available seals have two sealing surfaces and are very difficult to center

because of the shallow depth of the recessed face that provides location of the seal relative to its outside diameter. The proposed seal would eliminate the centering problem, while appreciably increasing reliability. .

Source: G. E. Durham of
North American Rockwell Corp.
under contract to
Marshall Space Flight Center
(MFS-13377)

Circle 25 on Reader Service Card.

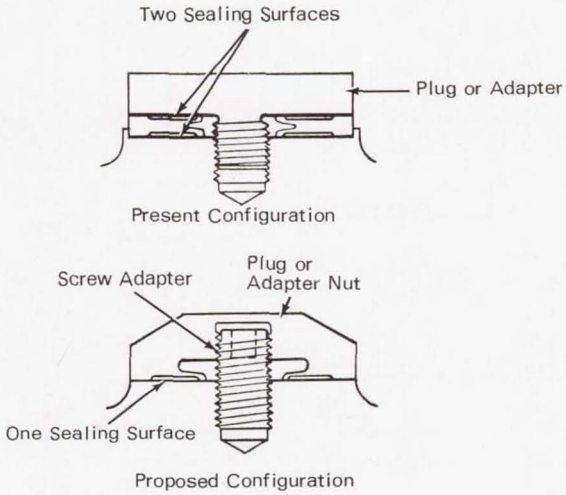

UNIVERSAL CONICAL SEAL FOR TUBING

A universal conical seal, developed in prototype, can produce a leaktight seal with only minor modification to standard flare-type tube fittings. The standard fitting is parted and faced to eliminate excess material and reduce the assembly weight. The male portion of the threaded fitting is then chamfered to accommodate the flare. The conical seal is made with a 0.646 rad (37°) angle (referenced from both sides). By joining the modified fitting to the sleeve and B-nut, a leaktight seal is achieved.

Source: L. E. Grant and B. T. Howland of
North American Rockwell Corp.
under contract to
Manned Spacecraft Center
(MSC-15865)

No further documentation is available.

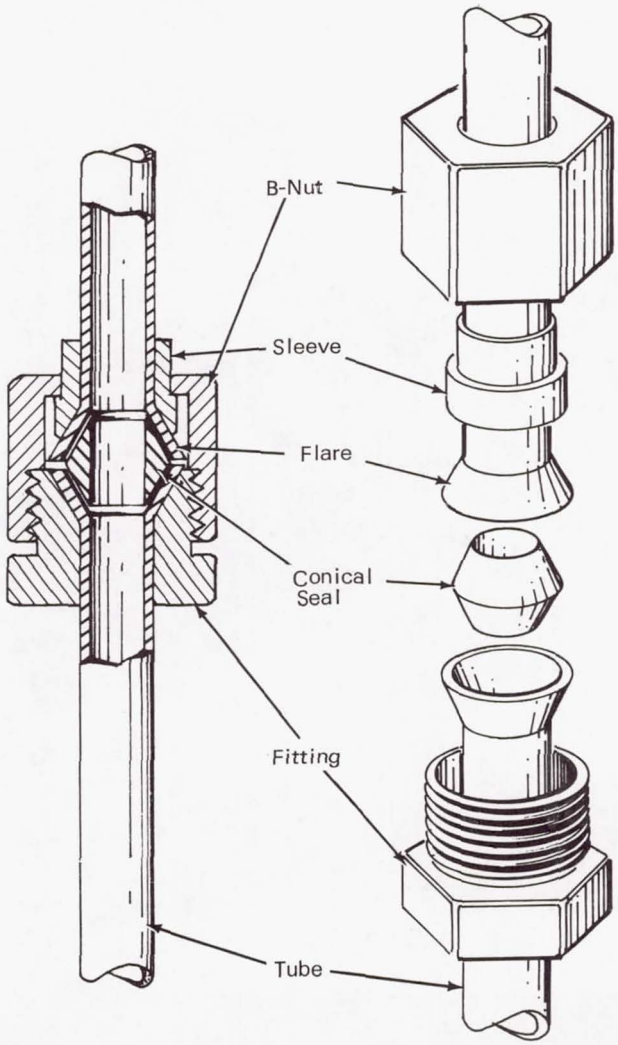

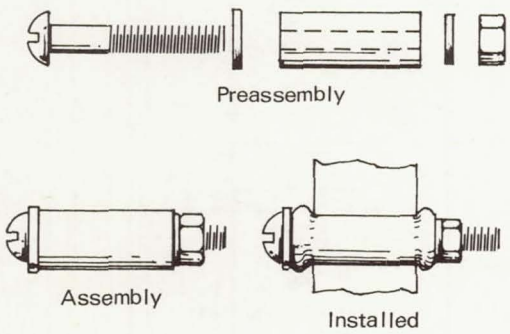

RUBBER TUBING MAKES HOLE-PLUG SEAL

A hole-plug seal can be tightened in place without damaging fragile or brittle materials, and will form a gas-tight seal up to the rupture pressure of the material it seals. Sections of rubber tubing (see fig.) are assembled with a 6-32 machine screw, a hex nut and two washers. The parts are assembled, the nut is very lightly tightened onto the screw, and the assembly is inserted into the hole to be plugged. The screw is then tightened until compression of the rubber tubing expands it to fill the hole and provide the seal. The size of the washer at the left (screw head) end of the assembly is slightly larger than that of the hole to be plugged, preventing inadvertent movement of the assembly beyond the hole.

A sealed cylindrical graphite drum with several holes plugged in this fashion was proof tested to a pressure of 13.79 kN/m^2 (200 psi).

Source: R. W. Lister of
Westinghouse Astronuclear Laboratory
under contract to
Space Nuclear Systems Office
(NUC-10020)

No further documentation is available.

TERMINAL HERMETICALLY SEALS METAL-SHEATHED CABLE

A metalized ceramic termination seal permits metal-sheathed cables to be integrated into other hermetically sealed electrical assemblies. Commonly used termination seals, such as organic and glass seals, do not function reliably under thermal shock and vibration.

The male portion of a multiconductor metal sheathed cable termination that can also

be applied to single-conductor metal cable, is shown in the sketch. The male adapter housing is designed to mate with any female connector geometric design. The metal sheath is removed to expose a sufficient length of the conductor, and the adapter housing is slid over the end. The metalized conductor pilot ceramic, cast to the selected geometric design, is inserted over the conductors and pushed against the metal cable sheath end. The pilot orients the conductors and supports them to prevent the cable insulation from flaking out. The cast metalized header ceramic, with internally brazed short-length tubing, is inserted over the conductors. The assembly is aligned in parallel to the metal sheath, and all but one of the conductors are brazed to the tubing. The adapter housing is then slid forward against the pilot ceramic and brazed or welded as shown. When the desired level of insulation resistance is obtained, the remaining conductor is brazed to form the hermetic seal. In the case shown, the insulation material was magnesium oxide, the metalized ceramics were aluminum oxide, and the small tubing was nickel. With proper materials and fabrication, this design operates reliably in thermal shock, vibration, and hazardous environments at temperatures in excess of 1088.5 K (1500° F).

Source: H. A. Fox of
Aerojet-General Corp.
under contract to
Space Nuclear Systems Office
(NUC-10035)

No further documentation is available.

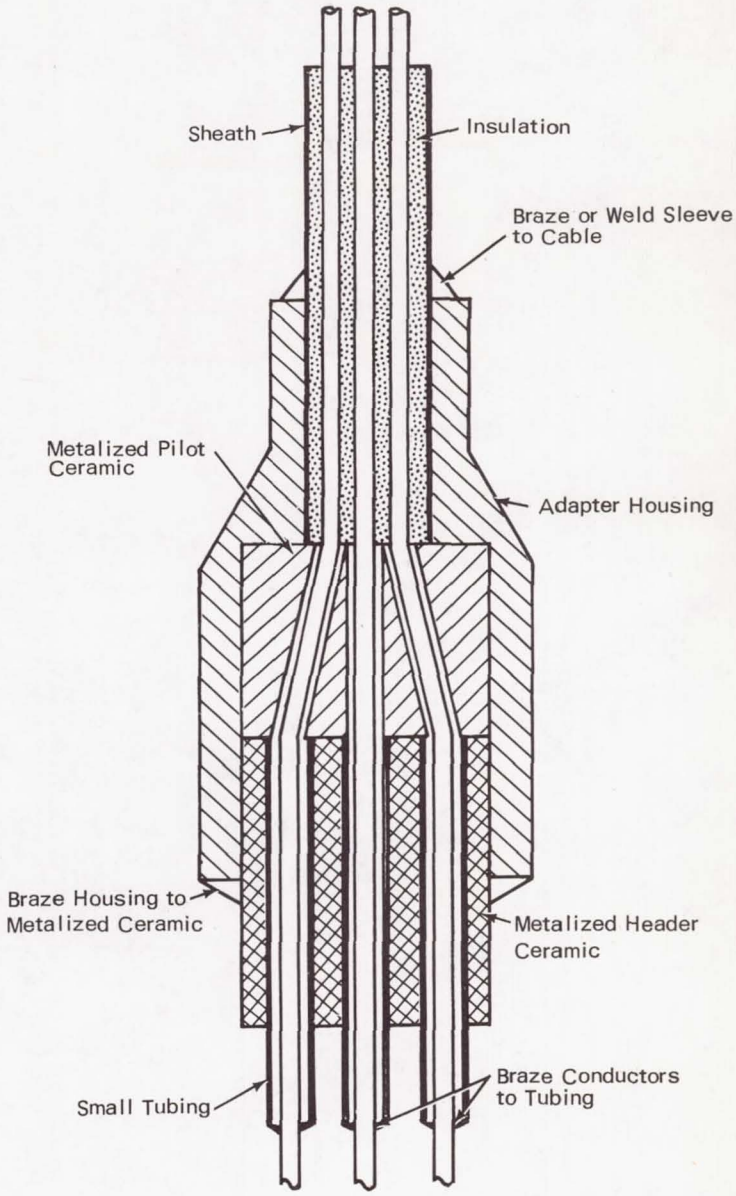

NASA-Langley, 1972

READER SERVICE CARD

NASA SP-5905(03)
SEALS AND SEALING TECHNIQUES

PLEASE TYPE OR PRINT ALL INFORMATION

NAME _____ TITLE _____

COMPANY _____ DIVISION _____

STREET _____ PHONE _____

CITY _____ STATE _____ ZIP _____

PRODUCT Mfd. _____

☐ PLEASE SEND ME INFORMATION ON OTHER TECHNOLOGICAL UTILIZATION PUBLICATIONS AND SERVICES.

☐ PLEASE SEND ME INFORMATION ON HOW I CAN RECEIVE NASA TECH. BRIEFS AND COMPILATIONS.

PLEASE CONTACT ME
I NEED TECHNOLOGICAL ASSISTANCE WITH

PRODUCTION RESOURCES:	POLLUTION:
☐ MATERIALS	☐ WATER
☐ EQUIPMENT	☐ AIR
☐ PROCESSING METHODS	☐ SOLID WASTE
☐ OTHER	☐ OTHER

PLEASE SEND SPECIFIC TECHNOLOGICAL INFORMATION AS CIRCLED

1	2	3	4	5	6	7	8	9	10
11	12	13	14	15	16	17	18	19	20
21	22	23	24	25	26	27	28	29	30
31	32	33	34	35	36	37	38	39	40
41	42	43	44	45	46	47	48	49	50

READER SERVICE CARD

NASA SP-5905(03)
SEALS AND SEALING TECHNIQUES

PLEASE TYPE OR PRINT ALL INFORMATION

NAME _____ TITLE _____

COMPANY _____ DIVISION _____

STREET _____ PHONE _____

CITY _____ STATE _____ ZIP _____

PRODUCT Mfd. _____

☐ PLEASE SEND ME INFORMATION ON OTHER TECHNOLOGICAL UTILIZATION PUBLICATIONS AND SERVICES.

☐ PLEASE SEND ME INFORMATION ON HOW I CAN RECEIVE NASA TECH. BRIEFS AND COMPILATIONS.

PLEASE CONTACT ME
I NEED TECHNOLOGICAL ASSISTANCE WITH

PRODUCTION RESOURCES:	POLLUTION:
☐ MATERIALS	☐ WATER
☐ EQUIPMENT	☐ AIR
☐ PROCESSING METHODS	☐ SOLID WASTE
☐ OTHER	☐ OTHER

PLEASE SEND SPECIFIC TECHNOLOGICAL INFORMATION AS CIRCLED

1	2	3	4	5	6	7	8	9	10
11	12	13	14	15	16	17	18	19	20
21	22	23	24	25	26	27	28	29	30
31	32	33	34	35	36	37	38	39	40
41	42	43	44	45	46	47	48	49	50

READER SERVICE CARD

NASA SP-5905(03)
SEALS AND SEALING TECHNIQUES

PLEASE TYPE OR PRINT ALL INFORMATION

NAME _____ TITLE _____

COMPANY _____ DIVISION _____

STREET _____ PHONE _____

CITY _____ STATE _____ ZIP _____

PRODUCT Mfd. _____

☐ PLEASE SEND ME INFORMATION ON OTHER TECHNOLOGICAL UTILIZATION PUBLICATIONS AND SERVICES.

☐ PLEASE SEND ME INFORMATION ON HOW I CAN RECEIVE NASA TECH. BRIEFS AND COMPILATIONS.

PLEASE CONTACT ME
I NEED TECHNOLOGICAL ASSISTANCE WITH

PRODUCTION RESOURCES:	POLLUTION:
☐ MATERIALS	☐ WATER
☐ EQUIPMENT	☐ AIR
☐ PROCESSING METHODS	☐ SOLID WASTE
☐ OTHER	☐ OTHER

PLEASE SEND SPECIFIC TECHNOLOGICAL INFORMATION AS CIRCLED

1	2	3	4	5	6	7	8	9	10
11	12	13	14	15	16	17	18	19	20
21	22	23	24	25	26	27	28	29	30
31	32	33	34	35	36	37	38	39	40
41	42	43	44	45	46	47	48	49	50

NATIONAL AERONAUTICS AND SPACE ADMINISTRATION
WASHINGTON, D. C. 20546

OFFICIAL BUSINESS
PENALTY FOR PRIVATE USE $300

POSTAGE AND FEES PAID
NATIONAL AERONAUTICS AND
SPACE ADMINISTRATION

NASA SCIENTIFIC AND TECHNICAL
INFORMATION FACILITY
CODE TI
POST OFFICE BOX 33
COLLEGE PARK, MARYLAND 20740

NATIONAL AERONAUTICS AND SPACE ADMINISTRATION
WASHINGTON, D. C. 20546

OFFICIAL BUSINESS
PENALTY FOR PRIVATE USE $300

POSTAGE AND FEES PAID
NATIONAL AERONAUTICS AND
SPACE ADMINISTRATION

NASA SCIENTIFIC AND TECHNICAL
INFORMATION FACILITY
CODE TI
POST OFFICE BOX 33
COLLEGE PARK, MARYLAND 20740

NATIONAL AERONAUTICS AND SPACE ADMINISTRATION
WASHINGTON, D. C. 20546

OFFICIAL BUSINESS
PENALTY FOR PRIVATE USE $300

POSTAGE AND FEES PAID
NATIONAL AERONAUTICS AND
SPACE ADMINISTRATION

NASA SCIENTIFIC AND TECHNICAL
INFORMATION FACILITY
CODE TI
POST OFFICE BOX 33
COLLEGE PARK, MARYLAND 20740