General Disclaimer

One or more of the Following Statements may affect this Document

- This document has been reproduced from the best copy furnished by the organizational source. It is being released in the interest of making available as much information as possible.

- This document may contain data, which exceeds the sheet parameters. It was furnished in this condition by the organizational source and is the best copy available.

- This document may contain tone-on-tone or color graphs, charts and/or pictures, which have been reproduced in black and white.

- This document is paginated as submitted by the original source.

- Portions of this document are not fully legible due to the historical nature of some of the material. However, it is the best reproduction available from the original submission.

Produced by the NASA Center for Aerospace Information (CASI)

FINAL REPORT

CONTROL SYSTEM ESTIMATION AND DESIGN FOR AEROSPACE VEHICLES WITH TIME DELAY

by

G. R. Allgaier
T. L. Williams

June, 1972

AUG 7 2
RECEIVED
NASA STI FACILITY
INPUT BRANCH

Prepared under Contract NGR 03-002-115
National Aeronautics and Space Administration

(NASA-CR-127464) CONTROL SYSTEM ESTIMATION AND DESIGN FOR AEROSPACE VEHICLES WITH TIME DELAY Final Report G.R. Allgaier, et al (Arizona Univ., Tucson.) Jun. 1972 66 p CSCL 22B G3/31
N72-28870
Unclas
15730

ENGINEERING EXPERIMENT STATION
COLLEGE OF ENGINEERING
THE UNIVERSITY OF ARIZONA
TUCSON, ARIZONA

Final Report

CONTROL SYSTEM ESTIMATION AND DESIGN FOR AEROSPACE VEHICLES WITH TIME DELAY

by

G. R. Allgaier
T. L. Williams

June, 1972

Distribution of this report is provided in the interest of information exchange. Responsibility for the contents resides in the authors or organization that prepared it.

Prepared under Contract NGR 03-002-115

The University of Arizona
Tucson, Arizona

for

Lewis Research Center
National Aeronautics and Space Administration

PRECEDING PAGE BLANK NOT FILMED

TABLE OF CONTENTS

		Page
	LIST OF TABLES	vii
	LIST OF ILLUSTRATIONS	viii
	ABSTRACT	ix
I.	INTRODUCTION	1
	1.1 Introduction	1
	1.2 Previous Work	2
	1.3 Organization	3
II.	OPTIMAL ESTIMATION OF LINEAR DISCRETE SYSTEMS WITH TIME DELAY	5
	2.1 Introduction	5
	2.2 Optimal Estimation for Discrete Systems	6
	2.3 Review of Previous Work on Estimation of Time Delay Systems	13
	2.4 Fundamental Theory of Estimation	15
	2.5 Optimal Prediction for Discrete Linear Systems With Time Delay	17
	2.5.1 System Model Properties	19
	2.5.2 Optimal One-Step Prediction	20
	2.6 Optimal Filtering for Discrete Linear Systems With Time Delay	26
	2.6.1 Estimation in Systems With No Time Delay	36
	2.7 Computational Aspects	37
III.	OPTIMAL CONTROL OF LINEAR DESCRETE-TIME STOCHASTIC SYSTEMS WITH TIME DELAY	41
	3.1 Introduction	41
	3.2 Problem Formulation	42
	3.2.1 System Model	42
	3.2.2 Performance Measure	44
	3.2.3 Physically Realizable Controls	45
	3.2.4 Problem Statement	47
	3.2.5 Discussion	47
	3.3 Review of Previous Work on Optimal Control of Linear Systems With Time Delay	48
	3.4 Stochastic Control Problem	50
	3.4.1 Problem Formulation	50

TABLE OF CONTENTS--Continued

Page

3.4.2 Problem Statement 51
3.4.3 Principle of Optimality 53
3.5 Stochastic Control Problem for Systems With Time Delay 54
3.5.1 Single-Stage 55
3.5.2 Double-Stage Problem 61
3.5.3 t-1 Stages 69
3.5.4 k Stages 69
3.6 Discussion of Results 79
3.6.1 Comparable Results for Deterministic Case . . 79
3.6.2 Comparable Results for Stochastic No-Delay Case 81
3.7 Computational Aspects of Optimal Controller 81

IV. EXPANDED STATE REPRESENTATION AND DUALITY 84

4.1 Introduction 84
4.2 Expanded State Representation of Systems With Time Delay 85
4.3 Optimal Estimation Solution of Expanded State Representation 87
4.3.1 Partitioned Representation of the Expanded State Solution to the Estimation Problem . . 89
4.4 Submatrix Representation of Expanded State Solution to Optimal Control Problem 94
4.5 Duality of Estimation and Control in Systems With Time Delay 101
4.5.1 Kalman's Dual Transformation 102
4.6 Summary and Conclusions 108

V. COMPUTATIONAL ADVANTAGES OF PARTITIONED SOLUTIONS TO OPTIMAL ESTIMATION AND CONTROL PROBLEMS 110

5.1 Introduction 110
5.2 Computational Requirements for Estimation Algorithms. . 111
5.3 Storage Requirements for Various Estimation Algorithms 115
5.4 Computational Requirements for Control Algorithms . . . 118
5.5 Storage Requirements for Various Control Algorithms . . 123
5.6 Summary 123

VI. CONCLUSIONS AND FUTURE WORK 127

6.1 Conclusions 127
6.2 Future Work 127

TABLE OF CONTENTS--Continued

Page

APPENDIX A: REQUIRED PROOFS FOR CHAPTER II 129

APPENDIX B: OBSERVABILITY AND CONTROLLABILITY OF TIME DELAY SYSTEMS 134

REFERENCES CITED 139

BIBLIOGRAPHY 141

LIST OF TABLES

Table		Page
3.1.	Summary of Optimal Control Algorithm for 2-Stage Sequence	68
3.2.	Summary of Optimal Control Algorithm for a (t-1)-Stage Sequence	70
3.3.	Summary of Optimal Control Algorithm for k-Stage Sequence	78
3.4.	Summary of Optimal Control Algorithm for Deterministic Time Delay Systems	80
3.5.	Summary of Optimal Control Algorithm for Stochastic Systems With No Time Delay	82
4.1.	Correspondence Between Kalman Notation and Allgaier Notation	104
4.2.	Relationship Between Estimation and Control Variables in Kalman Notation	106
5.1.	Analytic Expression of Number of Computational Operations Required for Various Estimation Algorithms	114
5.2.	Examples of Required Number of Computational Operations For Various Estimation Algorithms	116
5.3.	Analytic Expressions of Required Storage for Various Estimation Algorithms	117
5.4.	Examples of Required Storage for Various Estimation Algorithms	119
5.5.	Analytic Expressions for the Number of Computational Operations Required for Various Control Algorithms	121
5.6.	Comparison of Required Number of Computational Operations for Various Control Algorithms	122
5.7.	Analytic Expressions of Required Storage for Various Control Algorithms	124
5.7.	Examples of Required Storage for Various Control Algorithms	125

LIST OF ILLUSTRATIONS

Figure		Page
2.1.	Block Diagram of Dynamic System, S, With State x(k) and Measurement System, M, With Measurements z(i) . . .	7
2.2.	Structure of Optimal Filter for Discrete Linear Systems With Time Delay	30
3.1.	Block Diagram of Optimal Filter and Optimal Controller . .	52
3.2.	Block Diagram of Optimal Controller for Discrete Linear Systems With Time Delay	76
3.3.	Block Diagram of Overall Optimal Control System	77

ABSTRACT

The problems of estimation and control of discrete, linear, time-varying systems are considered. Previous solutions to these problems involved either approximate techniques, open-loop control solutions, or results which required excessive computation.

The estimation problem is solved by two different methods, both of which yield the identical algorithm for determining the optimal filter. This algorithm is the partitioned equivalent to a solution suggested in 1964 by formulating the time delay system in an "expanded state" representation. The partitioned results achieve a substantial reduction in computation time and storage requirements over the expanded solution, however. The results reduce to the Kalman filter when no delays are present in the system.

The control problem is also solved by two different methods, both of which yield identical algorithms for determining the optimal control gains. This result is also a partitioned solution to the "expanded state" representation of time delay systems and also achieves savings of computation time and storage requirements. The stochastic control is shown to be identical to the deterministic control, thus extending the separation principle to time delay systems. The results obtained reduce to the familiar optimal control solution when no time delays are present in the system.

The principle of duality of estimation and control is shown to be extended to time delay systems.

Necessary and sufficient conditions are developed for the observability and controllability of discrete linear systems with time delay.

An exhaustive bibliography of publications dealing with optimal estimation and control of time delay systems over the period 1960-1970 is included.

CHAPTER I

INTRODUCTION

1.1 Introduction

The study of systems with time delay is not a new one. During the past decade (1960-1970) over 200 papers have appeared dealing with the optimal control and estimation of linear systems with time delay. Closed-form solutions are difficult to obtain because the analytic expression for a time delay differs from the form used to describe the rest of the system. For example, in the frequency domain, the system is usually described by a ratio of polynomials in s, but the time delay is expressed as the transcendental function, e^{-Ts}. This may be put in a common form by expressing e^{-Ts} as an infinite series in s. Unfortunately, this results in a system of infinite order with an infinite number of poles. Since the exact solution to such a system is computationally impossible, the normal procedure is to truncate the approximation to the time delay. This results in a solution which is suboptimal.

In the time domain, the describing equations which are ordinary linear differential equations when no delay is present, become differential-difference equations to describe the time-delay effect. The time delay may be represented by a differential equation of infinite order. This also results in a system of infinite order, however, so a truncated series is generally used, resulting again in a suboptimal solution.

A third way of describing the system is in discrete time. This is naturally suited for time delay representation because the system and time delay can be described as difference equations. A major problem exists in such a representation because the resulting system is directly proportional to the magnitude of the longest time delay. Once again the computation can quickly become excessive.

The approach of this paper is further exploration of the discrete-time representation of systems with time delay. Substantial savings in both computation time and storage requirements are achieved over previous discrete-time solutions to systems with time delay.

1.2 Previous Work

An extensive bibliography is presented in Appendix C which contains a list of more than 200 papers published in the last decade, which deal with time delay systems. In general, these papers fall into three categories which limit the practicality of their implementation.

1. The majority of the control results are open-loop. This is of little value for stochastic systems where plant disturbances occur.

2. The computational requirements of the proposed solutions are too great for practical implementation.

3. Approximate methods are used, resulting in suboptimal solutions.

The previous work pertaining to this dissertation is discussed in detail in Chapters 2 and 3.

1.3 Organization

Chapter 2 develops an algorithm for optimal estimation of discrete linear systems with time delay using properties of conditional expectation. This result is shown to reduce to the Kalman filter when no time delay is present.

Chapter 3 develops an algorithm for optimal control of discrete linear systems with time delay using dynamic programming. The stochastic control is shown to be the same as the deterministic control for time delay systems, thus extending the separation principle to such systems. Both results are then shown to reduce to the familiar optimal control solutions when no time delay is present.

Chapter 4 introduces the "expanded state" form, an alternate representation of time delay systems in discrete time. This new form is then used to obtain results identical to those of Chapters 2 and 3. The expanded state representation of time delay systems is not unique to this paper. It has been examined by previous authors and found to be computationally unattractive because of the resulting increase in system order which is proportional to the magnitude of the longest time delay. Chapter 4 results in a partitioned algorithm solution whereas previous authors retained the entire expanded matrices in their original form.

Analytical expressions are developed in Chapter 5 for the computational and storage requirements of the partitioned solutions and compared with the requirements of the expanded state representation. Although identical results are obtained to the estimation and control

problems, the partitioned solutions of this paper result in a 30% to 90% reduction in computation time and a 30% to 60% reduction in storage requirements over the expanded form.

Chapter 6 summarizes the results and suggests future areas of study for time delay systems.

CHAPTER II

OPTIMAL ESTIMATION IN LINEAR DISCRETE SYSTEMS WITH TIME DELAY

2.1 Introduction

In this chapter, the problem of estimation is examined for stochastic linear discrete systems with time delay. It is assumed that both plant and measurement noise are present. An algorithm is obtained for estimating the state of the system.

Section 2.1 formulates the general estimation problem for discrete systems, whether time delay is present or not. The familiar discrete-time system model is modified to incorporate the effects of delayed state values into the system behavior.

In Section 2.3, previous work on stochastic time delay systems is reviewed. One of these works, that of Priemer and Vacroux,[1] obtains a similar result to that obtained in Section 2.6. The result in this chapter is achieved using properties of conditional expectation whereas the referenced work uses orthogonal projection. This result also includes systems with a control input whereas the work of Priemer and Vacroux does not.

Section 2.4 establishes basic results in estimation theory which are necessary for the results of Sections 2.5 and 2.6. In some instances the proofs accompany these basic results. In others where the proofs are considered unnecessary or burdensome, the reader is referred to the

literature.

Section 2.5 uses the properties of conditional expectation to develop an expression for the one-step prediction process.

Properties of conditional expectation are again used in Section 2.6 to develop the estimation algorithm for stochastic discrete-time systems with time delay. This result is demonstrated to reduce to the familiar Kalman filter when no delay is present in the system.

Section 2.7 summarizes the results of this chapter and discusses the computational aspects of the estimation algorithm obtained.

2.2 Optimal Estimation for Discrete Systems

In this section the general problem of estimation for discrete systems is considered. That is, the state and measurement processes of a dynamic system are discrete-time stochastic processes.

Consider a dynamic system S whose state as a function of time is an n-dimensional discrete-time stochastic process $\{x(k), k\varepsilon I\}$ where either $I = \{k:k = 0, 1, \ldots, N\}$ or $I = \{k:k = 0, 1, 2, \ldots\}$. Suppose that it is desired to know the value of $x(k)$ for some fixed k, but that $x(k)$ is not directly accessible for observation. In addition, suppose that a sequence of measurements $z(1), \ldots, z(j)$ are available which are causally related to $x(k)$ by means of some measurement system M as shown in Fig. 2.1, and it is desired to utilize these data to infer the value of $x(k)$. Let $\{z(i), i = 1,2,\ldots, j\}$ be an m-dimensional, discrete-time stochastic process.

Since only the measurements $z(1), \ldots, z(j)$ are available from which to estimate $x(k)$, let the estimate of $x(k)$ based on these

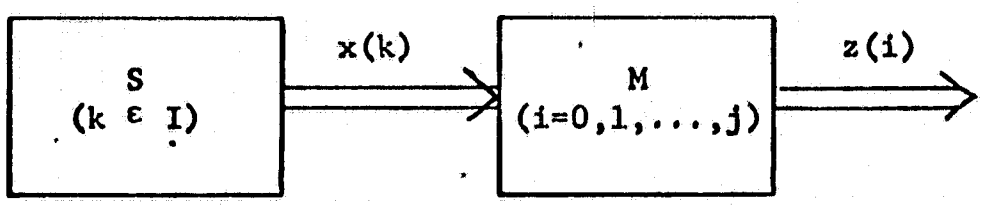

Figure 2.1 Block Diagram of Dynamic System, S, With State x(k) and Measurement System, M, With Measurements z(i)

measurements be denoted by $\hat{x}(k|j)$ and define it to be some n-dimensional, vector-valued function f_k of the measurements:

$$\hat{x}(k|j) = f_k\{z(i),\ i = 1, \ldots, j\}$$

The estimation problem is one of determining f_k in some rational and meaningful manner. The approach to be used in this chapter is based on consideration of the <u>estimation error</u>, $\tilde{x}(k|j)$, which is defined by the relation

$$\tilde{x}(k|j) \equiv x(k) - \hat{x}(k|j) \tag{2.1}$$

Ideally, $\tilde{x}(k|j) = 0$ and the estimate is exact. When $\tilde{x}(k|j) \neq 0$ a penalty is assigned for the incorrect estimate. This is done by specifying a <u>penalty</u> or <u>loss function</u> $L = L\{\tilde{x}(k|j)\}$ which has the following properties:

1. L is a scalar-valued function of the n variables
2. $L(\underset{\sim}{0}) = 0$ where $\underset{\sim}{0}$ denotes the null n-vector
3. $L[\tilde{x}^b(k|j)] \leq L[\tilde{x}^a(k|j)]$ whenever $p[\tilde{x}^b(k|j)] \leq p[\tilde{x}^a(k|j)]$ where p is a scalar-valued, non-negative, convex function of the n-variables
4. $L[\tilde{x}(k|j)] = L[-\tilde{x}(k|j)]$

The first property is essential to the obtaining of a unique minimum associated with a family of vectors.

The second property simply specifies that there is no penalty when the estimate is exact.

In the third property, p is a measure of the distance of $\tilde{x}(k|j)$ from the origin in n-dimensional euclidean space, and L is specified to

be a non-decreasing function of this distance. That is, as $\tilde{x}(k|j)$ becomes "closer" to zero, the penalty decreases.

The fourth property requires that $L[\cdot]$ be symmetric about the origin.

A loss function that possesses the above four properties is termed an <u>admissible loss function</u>. It should be noted that L need not be a convex function.

Since $x(k)$ and $\hat{x}(k|j)$ are random vectors, it follows that $\tilde{x}(k|j)$ is also a random vector and that L is a random variable. In order to obtain a useful measure of the loss, a <u>performance measure</u> J is defined as the mean value of L.

The familiar discrete-time model for a stochastic process may be expressed as

$$x(k+1) = \phi(k+1,k)x(k) + \psi(k+1,k)u(k) + \Gamma(k+1,k)w(k) \tag{2.5}$$

$$z(k+1) = H(k+1)x(k+1) + v(k+1) \tag{2.6}$$

where x = n vector (state)

u = r vector (control)

w = p vector (plant disturbance)

z = m vector (measurement)

v = m vector (measurement disturbance)

ϕ = n x n (state transition matrix)

Γ = n x p (disturbance transition matrix)

ψ = n x r (control transition matrix)

H = m x n (measurement matrix)

$\{w(k),\ k = 0, 1, \ldots\}$ is zero mean gaussian white sequence having a positive semi-definite p x p covariance matrix $\{Q(k),\ k = 0, 1, \ldots\}$. That is,

$$E\{w(k)\} = 0, \quad k = 0, 1, \ldots \tag{2.7}$$

$$E\{w(j)w'(k)\} = Q(k)\delta_{jk} \tag{2.8}$$

where δ_{jk} is the Kronecker delta.

$\{v(k+1),\ k=0,1,\ldots\}$ is a zero mean gaussian white sequence having a positive semi-definite m x m covariance matrix $\{R(k+1),\ k=0,1,\ldots\}$.

$$E\{v(k+1)\} = 0,\ k = 0, 1, \ldots \tag{2.9}$$

$$E\{v(j+1)v'(k+1)\} = R(k+1)\delta_{jk} \tag{2.10}$$

Attention is restricted to the case where the two stochastic processes

$\{w(k),\ k = 0, 1, \ldots\}$ and $\{v(k+1),\ k = 0, 1, \ldots\}$ (2.11)

are independent of each other. That is

$$E\{v(j)w'(k)\} = 0 \text{ for all } j = 1, 2, \ldots, k = 0, 1, \ldots \tag{2.12}$$

The initial state x(0) is a gaussian random n-vector with zero mean, having an n x n positive semi-definite covariance matrix

$$E\{x(0)x'(0)\} = P(0) \tag{2.13}$$

It is assumed that x(0) is independent of $\{w(k),\ k = 0, 1, \ldots\}$ and $\{v(k+1),\ k = 0, 1, \ldots\}$ so that

$$E\{x(0)w'(k)\} = 0,\ k = 0, 1, \ldots \tag{2.14}$$

$$E\{x(0)v'(k+1)\} = 0, \; k = 0, 1, \ldots \tag{2.15}$$

It is also assumed that the control sequence is either known or may be specified.

Expression (2.5) states that the value of the state vector at the next instant of time depends only on the present values of the state, control, and plant noise vectors. If, however, this future value of the state vector is also dependent upon past values of the state vector, then Eq. (2.5) must be modified to indicate this dependence. This is done by re-writing Eq. (2.5) as

$$x(k+1) = \sum_{i=0}^{J} \phi_i(k+1,k)x(k-i) + \psi(k+1,k)u(k) + \Gamma(k+1,k)w(k) \tag{2.16}$$

The index J in Eq. (2.16) indicates the most distant (in time) value of state vector, $x(k-J)$, that affects the state vector at the next instant in time. It is recognized, of course, that many of the $\phi_i(k+1,k)$ may be zero, indicating that not all delayed states back to $x(k-J)$ affect the expression for $x(k+1)$. Thus $\phi_i(k+1,k)$ is the state transition matrix associated with the delayed state vector $x(k-i)$ in Eq. (2.16). Properties expressed by Eq. (2.13), (2.14) and (2.15) must also be modified accordingly, as below, to include systems with time delay.

The initial and delayed initial state $\{x(-i), i = 0, 1, \ldots, J\}$ is a gaussian random n-vector with mean

$$E\{x(-i)\} = 0, \quad i = 0,1,\ldots,J \tag{2.17}$$

having the n x n positive semidefinite covariance matrices

$$E\{x(-i)x'(-j)\} = P(-i, -j) \quad i, j = 0, 1, \ldots, J. \tag{2.18}$$

It is assumed that $\{x(-i), i = 0,1,\ldots,J\}$ is independent of $\{w(k), k = 0, 1, \ldots\}$ and $\{v(k+1), k = 0, 1, \ldots\}$ so that

$$E\{x(-i)w'(k)\} = 0 \quad i=0,1,\ldots,J \quad k = 0, 1, \ldots \tag{2.19}$$

$$E\{x(-i)v'(k+1)\} = 0 \quad i = 0,1,\ldots,J \quad k = 0, 1, \ldots \tag{2.20}$$

In addition, it should be noted that the system described by Eq. (2.16) and Eq. (2.6) must be observable or the following theory has little meaning. A system is "observable" if every state in the corresponding deterministic system can be exactly determined from measurements of the output over a finite interval of time. The reader is referred to Appendix A for a discussion of observability of discrete linear systems with time delay.

With the system model described by Eqs. (2.6) – (2.11) and Eqs. (2.16) – (2.20), the specific estimation problem may now be formulated.

Given the state sequence $\{x(k), k = 0, 1, \ldots\}$ and the measurement sequence $\{z(i), i = 1, 2, \ldots, j\}$, determine the estimate, $\hat{x}(k|j)$, of $x(k)$ such that the expected value of the mean square filtering error is minimized. That is, it is desired to minimize $E\{L[\tilde{x}(k|j)]\}$ where

$$L[\tilde{x}(k|j)] = \tilde{x}(k|j)\tilde{x}'(k|j) \tag{2.21}$$

$$\tilde{x}(k|j) = x(k) - \hat{x}(k|j) \tag{2.22}$$

The remainder of this chapter is devoted to determining the optimal filtered estimate $\{\hat{x}(k|j), k=j\}$. As a byproduct, however, expressions are also obtained for the one-step prediction estimate $\{\hat{x}(k|j), k=j+1\}$ and for a limited range of smoothing estimates $\{\hat{x}(k|j), k=j-1, j-2, \ldots, j-J\}$.

These estimates are all obtained for discrete linear systems with time delays.

2.3. Review of Previous Work on Estimation of Time Delay Systems

Despite the great number of papers extending the original work in 1960 of Kalman and Bucy[2] on linear filtering, a number of years passed by before optimal filtering of systems with time delays was discussed. The bibliography contains an extensive list of such literature. The three articles which discuss linear systems with delay in the plant only (not in measurement or control) are discussed below.

In 1967, the theory developed by Kalman and Bucy was first extended to linear systems with multiple time delays by Kwakernaak[3] whose development is for continuous systems. The single-variance equation of the Kalman-Bucy theory is replaced by a partial differential equation and three boundary conditions. The boundary conditions are also partial differential equations. No explicit solution to these equations appears possible in closed form and solutions are not feasible for on-line analysis of discrete time systems. Thus, although the solution is theoretically presented, it is impossible to implement in practice due to the extensive computation required. This is substantiated by the fact that no literature appears in which this method is implemented.

The problem of developing a filter that was computationally more feasible and that could be used in practice was resolved in 1969 by Priemer and Vacroux.[1] They offered a solution for discrete linear systems with time delay which avoided the necessity of expanding the order of the system. The computation time was considerably reduced from that required by the method of Kwakernaak.[3] Chapter 4 of this dissertation demonstrates that Priemer and Vacroux's result is identical to that obtained by expanding the state space.

In addition to these papers is the method of approximating the time delay by a Taylor's Series expansion or by a Padé approximation. Unfortunately, the solution obtained is suboptimal, since a truncated approximation to the delay is used. No work appears in the literature discussing this type of approximation in relation to filtering of time delay systems.

Both papers discussed above consider the filter problem only and do not provide a complete solution for optimal control of stochastic time-delay systems. In 1969, however, Larson and Wells[4] were able to do so by restricting attention to serial systems. Although their solution was optimal only for single-input, single-output systems with delay in the plant, it is very easy to implement and computationally faster than any of the methods discussed in the above paragraphs. Their paper combines optimum estimation, prediction and control.

It is also recognized that if it can be shown that the separation principle applies to time delay systems, then the optimal filter may be developed independent of the optimal control solution. This is, in fact, demonstrated in Chapter 4 of this dissertation.

In summary, them, with one exception, the results shown thus far in the literature for estimating systems with delays in the plant, are limited, as to practical application, by one or more of the following:

1. Excessive computation time

2. Excessive computer storage requirements

3. Approximate methods resulting in suboptimal results

The one exception is the paper by Priemer and Vacroux. Their results are obtained by two alternate methods in this dissertation. Conditional expectation properties are used in this chapter and an expanded state representation is used in Chapter 4. In both cases the work of Priemer and Vacroux is extended to include control inputs.

2.4. Fundamental Theory of Estimation

In this section some fundamental results of discrete estimation theory are obtained. Although, in some cases, more general results may be established, only those which are necessary to the development of Sections 2.5 and 2.6 are presented. The reader is referred to the literature in those cases where the presentation of the proof is felt to be burdensome or unnecessary.

The following properties of gaussian conditional expectation are of fundamental importance in the next two sections. Here x, y, z are gaussian random vectors. For proofs the reader is referred to Meditch[5] (pp. 92-103).

1. $E\{x|y\}$ is a gaussian random vector which is a linear combination of the elements of y. (2.23)

2. $x - E\{x|y\}$ is independent of the random vector obtained by any linear transformation on y. (2.24)

3. If y and z are independent, where z is a random m-vector, then

$$E\{x|y,z\} = E\{x|y\} + E\{x|z\} - \bar{x} \tag{2.25}$$

4. For y and z not necessarily independent,

$$E\{x|y,z\} = E\{x|y,\tilde{z}\} = E\{x|y\} + E\{x|\tilde{z}\} - \bar{x} \tag{2.26}$$

where $\tilde{z} = z - E\{z|y\}$.

The following theorem can now be proved.

<u>Theorem 2.1</u>. If the loss function is defined as $L = [x(k) - \hat{x}(k|j)]'[x(k) - \hat{x}(k|j)]$ and $\{x(k), k\varepsilon I\}$ and $\{z(i), i = 1, \ldots, j\}$ are discrete time stochastic processes then

$$\hat{x}(k|j) = E\{x(k)|z^*(j)\} \tag{2.27}$$

where $z^*(j) = \begin{bmatrix} z(0) \\ z(1) \\ \vdots \\ z(j) \end{bmatrix}$

<u>Proof</u>: Recall from the problem statement, Eq. (2.21) and Eq. (2.22), that $\hat{x}(k|j)$ is to be chosen such that L is minimized. By taking the gradient of L in Eq. (2.21) with respect to $\hat{x}$ and setting it equal to zero

$$\nabla_{\hat{x}} L = -2E\{x(k) - \hat{x}(k|j)|z(1), \ldots, z(j)\} = 0 \tag{2.28}$$

Taking the transpose of both sides of Eq. (2.28)

$$\dot{E}\{x(k)|z(1), \ldots , z(j)\} = \dot{E}\{\hat{x}(k|j)|z(1), \ldots , z(j)\} \quad (2.29)$$

But the right-hand side of Eq. (2.29) is just

$$\dot{E}\{\hat{x}(k|j)|z^*(j)\} = \hat{x}(k|j) \quad (2.30)$$

By substituting this result into Eq. (2.29)

$$\hat{x}(k|j) = \dot{E}\{x(k)|z(1), \ldots , z(j)\} \quad (2.31)$$

and the theorem is proved.

Now the final four properties necessary to the development of this chapter can be stated. The reader is again referred to Meditch[5] (pp. 92-103) for proofs.

5. $\hat{x}(k|j)$ and $\tilde{x}(k|j)$ are gaussian random n-vectors where $\tilde{x}(k|j) = x(k) - \hat{x}(k|j)$. (2.32)

6. $\tilde{x}(k|j)$ is independent of any linear combination of the available measurements. (2.33)

7. $\hat{x}(k|j)$ is unique. (2.34)

8. $\dot{E}\{x|y\} = \bar{x} + P'_{xy}P^{-1}_{yy}(y-\bar{y})$ (2.35)

where

$$P_{xy} = \dot{E}\{xy'\}$$

$$P_{yy} = \dot{E}\{yy'\}$$

$$\bar{x} = \dot{E}\{x\}$$

$$\bar{y} = \dot{E}\{y\}$$

This concludes the results necessary to develop the optimal filter.

2.5. Optimal Prediction for Discrete Linear Systems with Time Delay

Although the results of the preceding section are fundamental ones, they are of limited practical utility. Consider the gaussian case where the optimal estimate is given by Eq. (2.35) as

$$\hat{x}(k|j) = \bar{x}(k) + P_{x(k)z^*(j)} P^{-1}_{z^*(j)z^*(j)} [z^*(j) - \bar{z}^*(j)] \qquad (2.36)$$

where $z^*(j) = \begin{bmatrix} z(0) \\ z(1) \\ \vdots \\ z(j) \end{bmatrix}$

For each set of measurements, it is necessary to compute the inverse of $P_{z^*(j)z^*(j)}$, a jm x jm matrix, where j is the number of measurements and m is the number of elements in the measurement vector. If m is 1 and there are 50 measurements, then a 50 x 50 matrix must be inverted. If it is desired to perform estimation "on-line", application of the above expression to generate the optimal estimate becomes impractical.

What are desired, from a computational point of view, are efficient and practical algorithms for processing the measurements sequentially, hopefully in real time, to obtain a current estimate. All of the results stated thus far are independent of the system model. For this reason they are valid for the time delay case also. The remainder of this chapter is devoted to developing such algorithms for prediction and estimation of the states of a discrete linear system with time delay.

2.5.1. System Model Properties

The system model is described by Eq. (2.6) - (2.11) and Eq. (2.16) - (2.20) where the fundamental system and measurement equations are

$$x(k+1) = \sum_{i=0}^{J} \phi_i(k+1,k)x(k-i) + \Gamma(k+1,k)w(k)+\psi(k+1,k)u(k) \quad (2.37)$$

$$z(k+1) = H(k+1)x(k+1) + v(k+1) \quad (2.38)$$

This model has the following properties. Proofs are in Appendix B.

1. The stochastic processes $\{x(k),\ k = 0, 1, \ldots\}$ and $\{z(k),\ k = 1, \ldots, j\}$ are gaussian, (2.39)
2. $E\{x(j)w'(k)\} = 0$ for all $k \geqq j$, $j = 0, 1, 2, \ldots$ (2.40)
3. $E\{z(j)w'(k)\} = 0$ for all $k \geqq j$, $j = 0, 1, 2, \ldots$ (2.41)
4. $E\{x(j)v'(k)\} = 0$ for all j and k. (2.42)
5. $E\{z(j)v'(k)\} = 0$ for all $k > j$. (2.43)

It is helpful in the sequel to define the following error covariance matrices in terms of

$$P(\ell,m|k) = E\{[x(\ell) - \hat{x}(\ell|k)][x(m) - \hat{x}(m|k)]'\} \quad (2.44)$$

<u>Case 1</u>: ℓ, $m>k$; Prediction Error Covariance Matrix (2.45)

<u>Case 2</u>: $\ell>k$, $m = k$; Prediction/Filtering Error Covariance Matrix (2.46)

<u>Case 3</u>: $\ell>k$, $m<k$; Prediction/Smoothing Error Covariance Matrix (2.47)

<u>Case 4</u>: $\ell = m = k$; Filtering Error Covariance Matrix (2.48)

<u>Case 5</u>: $\ell = k$, $m<k$; Filtering/Smoothing Error Covariance Matrix (2.49)

<u>Case 6</u>: ℓ, $m<k$; Smoothing Error Covariance Matrix (2.50)

It should also be clear from Eq. (2.44) that

$$P(\ell,m|k) = P'(m,\ell|k) \tag{2.51}$$

where $\tilde{x}(\ell|k) = x(\ell) - \hat{x}(\ell|k)$

$$= \text{prediction error if } \ell > k \tag{2.52}$$

$$= \text{filtering error if } \ell = k \tag{2.53}$$

$$= \text{smoothing error if } \ell < k \tag{2.54}$$

2.5.2. Optimal One-Step Prediction

The algorithm for the optimal one-step predicted estimate $\hat{x}(k+1|k)$ is developed below. Some important properties of the corresponding one-step prediction error $\tilde{x}(k+1|k) = x(k+1) - \hat{x}(k+1|k)$ are also established. Of particular interest is the nature of the stochastic process $\tilde{x}(k+1|k)$, $k = 0, 1, \ldots$ and the behavior of its corresponding covariance matrix

$$P(k+1,k+1|k) = E\{\tilde{x}(k+1|k)\tilde{x}'(k+1|k)\} \tag{2.55}$$

It is assumed that the optimum estimates $\{\hat{x}(k-i|k),\ i=0,1,\ldots J\}$ and the n x n covariance matrices $\{P(k-i,k-j|k),\ i,j = 0, 1, \ldots, J\}$ of the corresponding filtering and smoothing errors $\tilde{x}(k-i)$ and $\tilde{x}(k-j)$ are known for $k = 0, 1, \ldots$; $i,j = 0, 1, \ldots, J$. The procedures for obtaining $\tilde{x}(k-i|k)$ and $P(k-i,k-j|k)$ are given in the next section.

From the property given by Eq. (2.39) and Theorem 2.1

$$\hat{x}(j-i|j) = E\{x(j-i)|z(1), \ldots, z(j)\} \tag{2.56}$$

is the optimal estimate of $x(j-i)$ for $j = 1, 2, \ldots$; $i = 0, 1, \ldots, J$. For $j = 0$, there are no measurements and it follows from Theorem 2.1 that

$$\hat{x}(-i|0) = E\{x(-i)|\text{no measurements}\}$$
$$= E\{x(-i)\}$$
$$= 0 \tag{2.57}$$

It is clear that $\hat{x}(j-i|j)$ is gaussian from property (2.32). Similarly the filtering error $\tilde{x}(j-i|j) = x(j) - \hat{x}(j-i|j)$ is a zero mean gaussian random n-vector for which it is assumed the covariance matrix $P(j-i,j-\ell|j)$ is given. For $j = 0$,

$$\tilde{x}(-i|0) = x(-i) - \hat{x}(-i|0)$$
$$= x(-i) - 0 \tag{2.58}$$

so that
$$P(-i,-\ell|0) = E\{\tilde{x}(-i|0)\tilde{x}'(-\ell|0)$$
$$= E\{x(-i)x'(-\ell)$$
$$= P(-i,-\ell) \qquad i,\ \ell = 0,1,\ldots,J \tag{2.59}$$

where the latter is assumed given in the system description.

The following result can now be established for optimal prediction.

<u>Theorem 2.2</u> If the optimal filtered estimate $\hat{x}(j-i|j)$ and the covariance matrix $P(j-i,j-\ell|j)$ of the corresponding filtering error $\tilde{x}(j-i|j) = x(j-i) - \hat{x}(j-i|j)$ are known for some $j = 0, 1, \ldots$; $i, \ell = 0, 1, \ldots, J$, then for $k = j + 1$

(a) The optimal predicted estimate $\hat{x}(k+1|k)$ for all admissible loss functions is given by the

expression

$$\hat{x}(k+1|k) = \sum_{i=0}^{J} \phi_i(k+1,k)\hat{x}(k-i|k)$$

$$+ \psi(k+1,k)u(k) \tag{2.60}$$

(b) The stochastic process $\{\tilde{x}(k+1|k), k = 0, 1, 2, \ldots\}$ defined by the prediction error relation

$$\tilde{x}(k+1|k) = x(k+1) - \hat{x}(k+1|k)$$

is a zero mean Gauss Markov-(J+1) sequence whose covariance matrices are governed by relations

$$P(k+1,k+1|k) = \sum_{i=0}^{J} \sum_{j=0}^{J} \phi_i(k+1,k)P(k-i,k-j|k)\phi_j'(k+1,k)$$

$$+ \Gamma(k+1,k)Q(k)\Gamma'(k+1,k) \tag{2.61}$$

<u>Proof</u>: From Theorem 2.1 and Eq. (2.16)

$$\hat{x}(k+1|k) = E\{x(k+1)|z(1), \ldots, z(k)\} \tag{2.62}$$

$$x(k+1) = \sum_{i=0}^{J} \phi_i(k+1,k)x(k-i) + \Gamma(k+1,k)w(k) + \psi(k+1,k)u(k) \tag{2.16}$$

The substitution of Eq. (2.16) into Eq. (2.62) yields

$$\hat{x}(k+1|k) = E\{\sum_{i=0}^{J} \phi_i(k+1,k)x(k-i) + \Gamma(k+1,k)w(k)$$

$$+ \psi(k+1,k)u(k)|z(1), \ldots , z(k)\}$$

$$= \sum_{i=0}^{J} \phi_i(k+1,k)\dot{E}\{x(k-i)|z(1), \ldots , z(k)\}$$

$$+ \Gamma(k+1,k)\dot{E}\{w(k)|z(1), \ldots , z(k)\}$$

$$+ \psi(k+1,k)\dot{E}\{u(k)|z(1), \ldots , z(k)\} \qquad (2.63)$$

The application of property (2.41) and Eq. (2.7) to the second term causes it to vanish.

$$\dot{E}\{w(k)|z(1), \ldots , z(k)\} = \dot{E}\{w(k)\} = 0 \qquad (2.64)$$

Under the assumption that the control sequence $\{u(k), k=0, 1, \ldots\}$ is known or can be specified as desired, the third term in Eq. (2.63) becomes

$$\psi(k+1,k)\dot{E}\{u(k)|z(1), \ldots , z(k)\} = \psi(k+1,k)u(k) \qquad (2.65)$$

The substitution of Eq. (2.64) and Eq. (2.60) reduces Eq. (2.63) to

$$\hat{x}(k+1|k) = \sum_{i=0}^{J} \phi_i(k+1,k)\hat{x}(k-i|k) + \psi(k+1,k)u(k) \qquad (2.66)$$

which verifies Eq. (2.60) of Theorem 2.2. From the definition of prediction error (2.52), filtering error (2.53) and smoothing error (2.54), application of Eq. (2.16) and Eq. (2.66) yields

$$\tilde{x}(k+1|k) = x(k+1) - \hat{x}(k+1|k)$$

$$= \sum_{i=0}^{J} \phi_i(k+1,k)x(k-i) + \Gamma(k+1,k)w(k) + \psi(k+1,k)u(k)$$

$$- \sum_{i=0}^{J} \phi_i(k+1,k)\hat{x}(k-i|k) - \psi(k+1,k)u(k)$$

$$= \sum_{i=0}^{J} \phi_i(k+1,k)\tilde{x}(k-i|k) + \Gamma(k+1,k)w(k) \qquad (2.67)$$

It remains to establish that $\tilde{x}(k+1|k)$ is a zero mean Gauss-Markov -(J+1) sequence. This can be done by examining Eq. (2.67). Since $w(k)$ is gaussian and $\{\tilde{x}(-i|0), i = 0, 1, \ldots, J\}$ is gaussian, it follows that $\tilde{x}(k+1|k)$ is a zero-mean discrete-time gaussian sequence. The Markov property also follows immediately from Eq. (2.67). In fact this has a Markov -(J+1) property since the sequence depends on events occurring (J+1) time intervals in the past.

Now the expression may be determined for the prediction error covariance matrix.

$$P(k+1,k+1|k) = E\{\tilde{x}(k+1|k)\tilde{x}'(k+1|k)\}$$

$$= E\{[\sum_{i=0}^{J} \phi_i(k+1,k)\tilde{x}(k-i|k) + \Gamma(k+1,k)w(k)]$$

$$\cdot [\sum_{j=0}^{J} \phi_j(k+1,k)\tilde{x}(k-j|k) + \Gamma(k+1,k)w(k)]'\}$$

$$= \sum_{i=0}^{J} \sum_{j=0}^{J} \phi_i(k+1,k)E\{\tilde{x}(k-i|k)\tilde{x}'(k-j|k)\}\phi_j'(k+1,k)$$

$$+ 2\sum_{i=0}^{J} \phi_i(k+1,k)E\{\tilde{x}(k-i|k)w'(k)\}\Gamma'(k+1,k)$$

$$+ \Gamma(k+1,k)E\{w(k)w'(k)\}\Gamma'(k+1,k)\} \qquad (2.68)$$

From the definition of filtering error, Eq. (2.53), and smoothing error, Eq. (2.54),

$$E\{\tilde{x}(k-i|k)w'(k)\} = E\{[x(k-i) - \hat{x}(k-i|k)][w'(k)]\}$$

$$= E\{x(k-i)w'(k)\} - E\{\hat{x}(k-i|k)w'(k)\} \qquad (2.69)$$

The first term of Eq. (2.69) is identically zero due to property (2.40). Further, since $\hat{x}(k-i|k)$ is a linear combination of the measurements it may be expressed as

$$\hat{x}(k-i|k) = \sum_{\ell=1}^{k} A(\ell)z(\ell) \qquad (2.70)$$

The substitution of Eq. (2.70) in the second term of Eq. (2.69) causes it to vanish also.

$$E\{x(k-i|k)w'(k)\} = E\{\sum_{\ell=1}^{k} A(\ell)z(\ell)w'(k)\}$$

$$= \sum_{\ell=1}^{k} A(\ell)E\{z(\ell)w'(k)\}$$

$$= 0 \qquad (2.71)$$

The application of property (2.41) causes the cross-product terms of Eq. (2.68) to vanish. Thus Eq. (2.68) becomes

$$P(k+1,k+1|k) = \sum_{i=0}^{J} \sum_{j=0}^{J} \phi_i(k+1,k)E\{\tilde{x}(k-i|k)\tilde{x}'(k-j|k)\}\phi_j'(k+1|k)$$

$$+ \Gamma(k+1,k)E\{w(k)w'(k)\}\Gamma'(k+1,k)$$

The substitution of Eq. (2.44) and Eq. (2.8) gives

$$P(k+1,k+1|k) = \sum_{i=0}^{J} \sum_{j=0}^{J} \phi_i(k+1,k)P(k-i,k-j|k)\phi_j'(k+1,k)$$

$$+ \Gamma(k+1,k)Q(k)\Gamma'(k+1,k) \qquad (2.72)$$

Note, at this point, that the solution to the <u>single-stage optimal prediction</u> problem is solved. The associated error covariance matrix expressed by Eq. (2.72) requires knowledge of $P(k-i,k-j|k)$, however, and this is known only for $k = 0$. In the next section this problem is resolved and expressions for the filtering and smoothing error covariance matrices $P(k-i,k-j|k)$ are obtained. This information is then combined with that of the single-stage optimal predictor to obtain the optimal filter for time-delay systems.

2.6. Optimal Filtering for Discrete Linear Systems With Time Delay

In developing the algorithm for optimal filtering for the system of Eq. (2.37) and Eq. (2.38) it is assumed that only the initial estimate $\{\hat{x}(-i|0) = 0,\ i=0,1,\ldots,J\}$, the covariance matrices of the filtering and smoothing errors at the initial time $P(-i,-j|0) = E\{\tilde{x}(-i|0)\tilde{x}'(-j|0)\} = E\{x(-i)x(-j)\} = P(-i,-j)$ and the set of measurements $\{z(1), \ldots, z(k), z(k+1), k \geq 0\}$ are given.

From Theorem 2.1 the optimal filtered $(i=0)$ and smoothed $(i=1, \ldots, J)$ estimates $\hat{x}(k+1-i|k+1)$ are given by the relation

$$\hat{x}(k+1-i|k+1) = E\{x(k+1-i)|z(1), \ldots, z(k), z(k+1)\} \quad i=0,1,\ldots,J \qquad (2.73)$$

Property (2.26) may now be applied to examine (2.73).

$$E\{x|y,z\} = E\{x|y\} + E\{x|\tilde{z}\} - \bar{x} \tag{2.26}$$

where $\tilde{z} = z - E\{z|y\}$.

By substituting (2.26) into (2.73) and noting that $\bar{x} = \psi(k+1,k)u(k)$

$$\hat{x}(k+1-i|k+1) = E\{x(k+1-i)|z(1), \ldots, z(k)\}$$

$$+ E\{x(k+1-i)|\tilde{z}(k+1|k)\} - \psi(k+1,k)u(k) \tag{2.74}$$

for $k = 0, 1, \ldots$ and where

$$\tilde{z}(k+1|k) = z(k+1) - \hat{z}(k+1|k)$$

$$= z(k+1) - E\{z(k+1)|z(1), \ldots, z(k)\} \tag{2.76}$$

This difference $\tilde{z}(k+1|k)$ is called the <u>measurement residual</u>. By substituting Eq. (2.38) and solving for $\hat{z}(k+1|k)$

$$\hat{z}(k+1|k) = E\{H(k+1)x(k+1) + v(k+1)|z(1), \ldots, z(k)\}$$

$$= H(k+1)E\{x(k+1)|z(1), \ldots, z(k)\}$$

$$+ E\{v(k+1)|z(1), \ldots, z(k)\}$$

$$= H(k+1)\hat{x}(k+1|k) + E\{v(k+1)|z(1), \ldots, z(k)\} \tag{2.77}$$

The second term vanishes by Eq. (2.43) and Eq. (2.77) becomes

$$\hat{z}(k+1|k) = H(k+1)\hat{x}(k+1|k), \quad k = 0, 1, \ldots \tag{2.78}$$

With these preliminaries completed, the basic theorem for optimal filtering of discrete linear systems with time delay may now be proved.

<u>Theorem 2.3.</u> (a) The optimal filtered estimate $\hat{x}(k+1|k+1)$ for the system described by Eqs. (2.37) and (2.38) is given by the recursive relation

$$\hat{x}(k+1|k+1) = \hat{x}(k+1|k) + K_0(k+1)[z(k+1) - \hat{x}(k+1|k)] \tag{2.79}$$

which is a specific case of the more general expression

$$\hat{x}(k+1-i|k+1) = \hat{x}(k+1-i|k) + K_i(k+1)[z(k+1) - \hat{x}(k+1|k)] \tag{2.80}$$

for $k = 0, 1, \ldots$ where $\hat{x}(-i|0) = 0, \quad i = 0, 1, \ldots, J$.

(b) $K_i(k+1)$ is an $n \times m$ matrix which is specified by the set of relations

$$K_i(k+1) = P(k+1-i,k+1|k)H'(k+1)[H(k+1)P(k+1,k+1|k)H'(k+1) + R(k+1)]^{-1} \quad i = 0, 1, \ldots, J \tag{2.81}$$

$$P(k-j,k+1|k) = \sum_{i=0}^{J} P(k-i,k-j|k)\phi_i'(k+1,k) \quad j = 0,1,\ldots,J-1 \tag{2.82}$$

$$P(k-i,k-j|k) = P(k-i,k-j|k-1) - K_i(k)J(k)P(k,k-j|k-1) \quad i,j = 0, 1, \ldots, J \tag{2.83}$$

$$P(k+1,k+1|k) = \sum_{i=0}^{J}\sum_{j=0}^{J} \phi_i(k+1,k)P(k-i,k-j|k)\phi'(k+1,k) + \Gamma(k+1,k)Q(k)\Gamma'(k+1,k) \tag{2.84}$$

for $k = 0, 1, \ldots$ and $P(-i,-j|0) = P(-i,-j)$ is the initial condition for Eq. (2.84).

(c) The stochastic process $\{\tilde{x}(k+1|k+1), k = 0, 1, \ldots\}$ which is defined by

$$\tilde{x}(k+1|k+1) = x(k+1) - \hat{x}(k+1|k+1), \quad k = 0, 1, \ldots$$

is a zero mean Gauss-Markov $-(J+1)$ sequence whose covariance matrix is given by Eq. (2.83) for $i = j = 0$.

<u>Proof</u>: From Eq. (2.74)

$$\hat{x}(k+1-i|k+1) = \hat{x}(k+1-i|k) + E\{x(k+1-i)|\tilde{z}(k+1|k)\} - \psi(k+1,k)u(k) \tag{2.85}$$

Further, since $x(k+1)$ and $\tilde{z}(k+1|k)$ are gaussian, property (2.35) may be invoked

$$E\{x|\tilde{z}\} = x + P_{x\tilde{z}}P_{\tilde{z}\tilde{z}}^{-1}\tilde{z} \tag{2.35}$$

to obtain the following result

$$\hat{x}(k+1-i|k+1) = \psi(k+1,k)u(k) + \hat{x}(k+1-i|k) + E\{x(k+1-i)\tilde{z}'(k+1|k)\} \cdot [E\{\tilde{z}(k+1|k)\tilde{z}'(k+1|k)\}]^{-1}\tilde{z}(k+1|k) - \psi(k+1,k)u(k) \tag{2.86}$$

By defining $K_i(k+1) \equiv E\{x(k+1-i)\tilde{z}'(k+1|k)\}[E\{\tilde{z}(k+1|k)\tilde{z}'(k+1|k)\}]^{-1}$

$$i = 0, 1, \ldots, J \tag{2.87}$$

Eq. (2.86) may be rewritten

$$\hat{x}(k+1-i|k+1) = \hat{x}(k+1-i|k) + K_i(k+1)\tilde{z}(k+1|k) \tag{2.88}$$

However, it is clear from Eq. (2.75) and Eq. (2.78) that

$$\begin{aligned}\tilde{z}(k+1|k) &= z(k+1) - \hat{z}(k+1|k) \\ &= z(k+1) - H(k+1)\hat{x}(k+1|k)\end{aligned} \tag{2.89}$$

The substitution of Eq. (2.89) into Eq. (2.88) yields

$$\hat{x}(k+1-i|k+1) = \hat{x}(k+1-i|k) + K_i(k+1)[z(k+1) - H(k+1)\hat{x}(k+1|k)] \tag{2.90}$$

which is the result postulated in Eq. (2.75). The appropriate initial conditions are obviously $\{\hat{x}(-i|0) = 0,\ i = 0, 1, \ldots, J\}$. This result, Eq. (2.90), combined with that of the one-step predictor, Eq. (2.66), is sufficient to describe the structure of the filter which is shown in Figure 2.2.

$$\hat{x}(k+1|k) = \sum_{i=0}^{J} \phi_i(k+1,k)\hat{x}(k-i|k) + \psi(k+1,k)u(k) \tag{2.66}$$

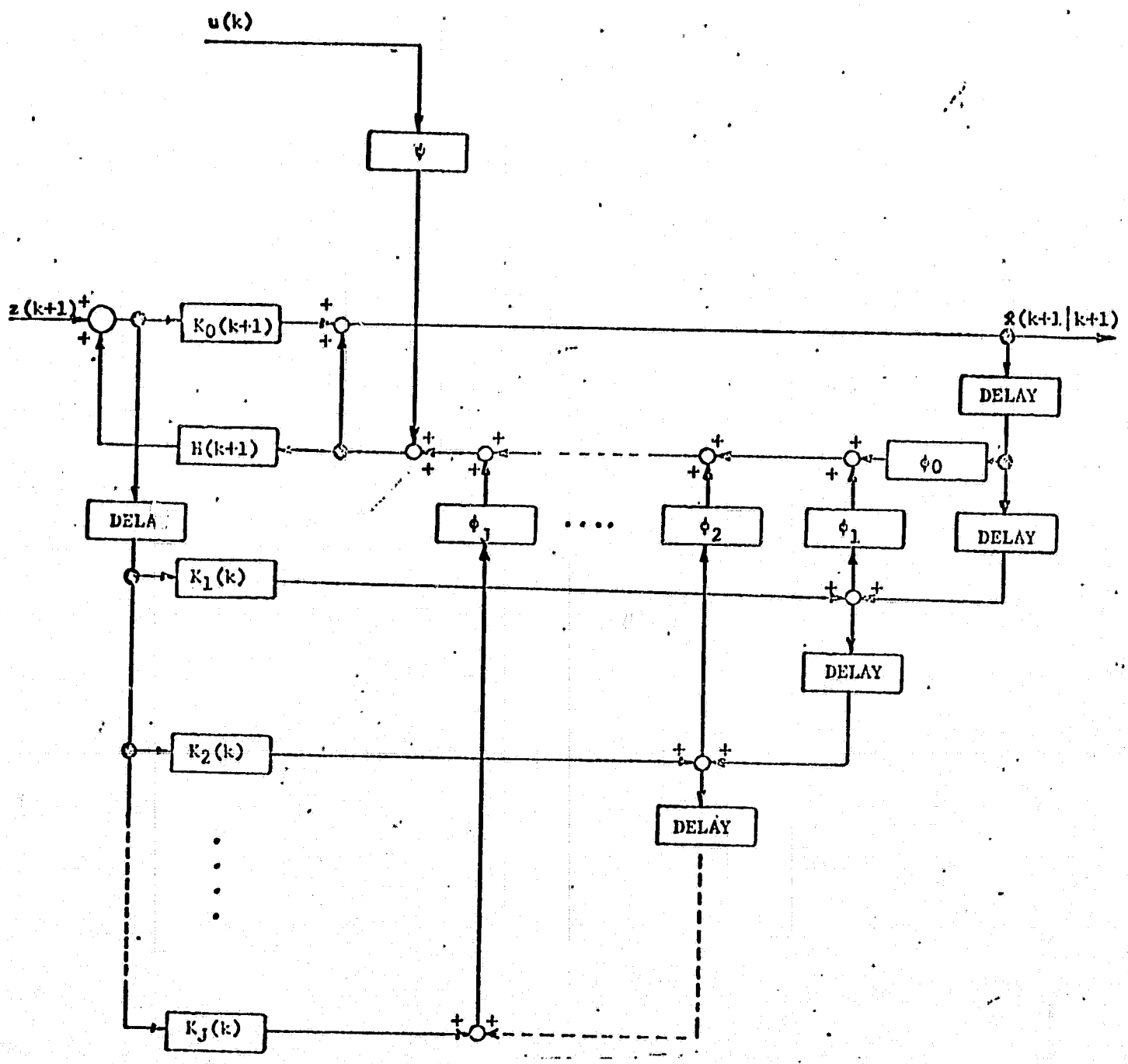

Figure 2.2 Structure of Optimal Filter for Discrete Linear Systems With Time Delay

Evaluation of $K_1(k+1)$.. From the definition of prediction error and Eq. (2.89)

$$\begin{aligned}\tilde{z}(k+1|k) &= z(k+1) - \hat{z}(k+1|k)\\ &= z(k+1) - H(k+1)\hat{x}(k+1|k)\\ &= H(k+1)x(k+1) + v(k+1) - H(k+1)\hat{x}(k+1|k)\\ &= H(k+1)\tilde{x}(k+1|k) + v(k+1) \qquad (2.91)\end{aligned}$$

Consequently,

$$\begin{aligned}P_{\tilde{z}(k+1)\tilde{z}(k+1)} &= E\{z(k+1|k)\tilde{z}'(k+1|k)\}\\ &= E\{[H(k+1)\tilde{x}(k+1|k) + v(k+1)][\tilde{x}'(k+1|k)H'(k+1)\\ &\qquad + v'(k+1)]\} \qquad (2.92)\\ &= H(k+1)E\{\tilde{x}(k+1|k)\tilde{x}'(k+1|k)\}H'(k+1)\\ &\qquad + H(k+1)E\{\tilde{x}(k+1|k)v'(k+1)\}\\ &\qquad + E\{v(k+1)\tilde{x}'(k+1|k)\}H'(k+1)\\ &\qquad + E\{v(k+1)v'(k+1)\} \qquad (2.93)\end{aligned}$$

The middle two terms of Eq. (2.93) are now shown to vanish. Since one is just the transpose of the other it is sufficient to examine only one.

$$E\{\tilde{x}(k+1|k)v'(k+1)\} = E\{x(k+1)v'(k+1)\} - E\{\hat{x}(k+1|k)v'(k+1)\} \qquad (2.94)$$

From Eq. (2.43) the first term of Eq. (2.94) vanishes. From Eq. (2.23) and Eq. (2.27) the estimate is a linear combination of the measurements

$$\hat{x}(k-i+1|k) = \sum_{\ell=1}^{k} A_i(\ell)z(\ell) \qquad i = 0, 1, \ldots, J \qquad (2.95)$$

The substitution of Eq. (2.95) in the second term of Eq. (2.94) yields

$$\begin{aligned}E\{\hat{x}(k+1|k)v'(k+1)\} &= E\{\sum_{\ell=1}^{k} A_0(\ell)z(\ell)v'(k+1)\}\\ &= \sum_{\ell=1}^{k} A_0(\ell)E\{z(\ell)v'(k+1)\} = 0 \qquad (2.95)\end{aligned}$$

by the property expressed in Eq. (2.43). Therefore, Eq. (2.93) may be rewritten, using Eq. (2.10),

$$P_{\tilde{z}(k+1)\tilde{z}(k+1)} = H(k+1)P(k+1,k+1|k)H'(k+1) + R(k+1) \tag{2.97}$$

Evaluation of $P_{x\tilde{z}}$ in Eq. (2.35) and substitution of Eq. (2.89) yields

$$\begin{aligned} P_{x\tilde{z}} &= E\{x(k+1-i)\tilde{z}'(k+1|k)\} \\ &= E\{[\tilde{x}(k+1-i|k) + \hat{x}(k+1-i|k)][\tilde{x}'(k+1|k)H'(k+1) + v'(k+1)]\} \\ &= E\{\tilde{x}(k+1-i|k)\tilde{x}'(k+1|k)\}H'(k+1) \\ &\qquad + E\{\tilde{x}(k+1-i|k)v'(k+1)\} \\ &\qquad + E\{\hat{x}(k+1-i|k)\tilde{x}'(k+1|k)\}H'(k+1) \\ &\qquad + E\{\hat{x}(k+1-i|k)v'(k+1)\} \end{aligned} \tag{2.98}$$

The second term in Eq. (2.98) vanishes due to Eqs. (2.42), (2.96) and (2.58). By property (2.33) and Eq. (2.70) the third term vanishes. The fourth term in Eq. (2.98) vanishes due to Eq. (2.96). Therefore, Eq. (2.98) becomes

$$\begin{aligned} P_{x(k+1-i)\tilde{z}(k+1|k)} &= E\{\tilde{x}(k+1-i|k)\tilde{x}'(k+1|k)\}H'(k+1) \\ &= P\{k+1-i,k+1|k\}H'(k+1) \end{aligned} \tag{2.99}$$

The substitution of Eq. (2.97) and Eq. (2.99) into the defining relation, Eq. (2.87), for $K_i(k+1)$ gives

$$\begin{aligned} K_i(k+1) &= P_{x(k+1-i)\tilde{z}(k+1|k)}P^{-1}_{\tilde{z}(k+1)\tilde{z}(k+1)} \\ &= P(k+1-i,k+1|k)H'(k+1)[H(k+1)P(k+1,k+1|k)H'(k+1) \\ &\qquad + R(k+1)]^{-1} \end{aligned} \tag{2.100}$$

for $k = 0, 1, \ldots$ and Eq. (2.109) of Theorem 2.3 is proved. Note that if $R(k+1)$ is assumed to be positive definite, it follows that the required inverse always exists since $P(k+1,k+1|k)$ is positive semi-definite.

Evaluation of $P(k+1-i,k+1|k)$

From Eq. (2.72) the expression for $P(k+1,k+1|k)$ is known to be

$$P(k+1,k+1|k) = \sum_{i=0}^{J}\sum_{j=0}^{J} \phi_i(k+1,k)P(k-i,k-j|k)\phi_j'(k+1,k)$$

$$+ \Gamma(k+1,k)Q(k)\Gamma'(k+1,k) \qquad (2.72)$$

It remains to determine the error covariance matrices $P(k+1-i,k+1|k)$ and $P(k-i,k-j|k)$. For $i = 0$, $P(k+1,k+1|k)$ is defined by Eq. (2.72) so the cases of interest are for $i = 1, \ldots, J$. Now to determine $P(k+1-i,k+1|k)$ for $i = 1, \ldots, J$. From Eq. (2.37) and Eq. (2.66)

$$\tilde{x}(k+1|k) = x(k+1) - \hat{x}(k+1|k)$$

$$= \sum_{i=0}^{J} \phi_i(k+1,k)x(k-i) + \Gamma(k+1,k)w(k) + \psi(k+1,k)u(k)$$

$$- \sum_{i=0}^{J} \phi_i(k+1,k)\hat{x}(k-i|k) - \psi(k+1,k)u(k)$$

$$= \sum_{i=0}^{J} \phi_i(k+1,k)\tilde{x}(k-i|k) + \Gamma(k+1,k)w(k) \qquad (2.101)$$

From the definition of error covariance matrix and Eq. (2.101)

$$\underset{[j=0,\ldots,J-1]}{P(k-j,k+1|k)} = E\{\tilde{x}(k-j|k)\tilde{x}'(k+1|k)$$

$$= E\{\tilde{x}(k-j|k)[w'(k)\Gamma'(k+1,k) + \sum_{i=0}^{J} \tilde{x}'(k-i|k)\phi'(k+1,k)]\}$$

$$= E\{\tilde{x}(k-j|k)w'(k)\}\Gamma'(k+1,k)$$

$$+ \sum_{i=0}^{J} E\{\tilde{x}(k-j|k)\tilde{x}'(k-i|k)\}\phi_i'(k+1,k) \qquad (2.102)$$

The first term in Eq. (2.102) vanishes due to Eq. (2.40), Eq. (2.95) and Eq. (2.41). Therefore, Eq. (2.102) becomes

$$P(k-j,k+1|k) = \sum_{i=0}^{J} P(k-j,k-i|k)\phi_i'(k+1,k) \quad j = 0, 1, \ldots, J-1 \tag{2.103}$$

which completes the proof of Eq. (2.84) of Theorem 2.3.

Recall that for $i = 0$,

$$P(k+1-i,k+1|k) = P(k+1,k+1|k)$$

which is already known from Eq. (2.72).

<u>Evaluation of $P(k-i,k-j|k)$</u>

Finally, it remains to determine the error covariance matrix

$$P(k-i,k-j|k) = E\{\tilde{x}(k-i|k)\tilde{x}'(k-j|k)\} \tag{2.104}$$

From the definition of estimation error and substitution of Eq. (2.90) and Eq. (2.38)

$$\begin{aligned}
\tilde{x}(k-i|k) &= x(k-i) - \hat{x}(k-i|k) \\
&= x(k-i) - [\hat{x}(k-i|k-1) + K_i(k)\{z(k) - H(k)\hat{x}(k|k-1)\}] \\
&= \tilde{x}(k-i|k-1) - K_i(k)[H(k)x(k) + v(k) - H(k)\hat{x}(k|k-1)] \\
&= \tilde{x}(k-i|k-1) - K_i(k)H(k)\tilde{x}(k|k-1) - K_i(k)v(k)
\end{aligned} \tag{2.105}$$

Substitution of Eq. (2.105) into (2.104) yields

$$\begin{aligned}
P(k-i,k-j|k) = {} & E\{\tilde{x}(k-i|k-1)\tilde{x}'(k-j|k-1) \\
& - E\{\tilde{x}(k-i|k-1)\tilde{x}'(k|k-1)\}H'(k)K_j'(k) \\
& - E\{\tilde{x}(k-i|k-1)v'(k)\}K_j'(k) \\
& - K_i(k)H(k)E\{\tilde{x}(k|k-1)\tilde{x}(k-j|k-1)\} \\
& + K_i(k)H(k)E\{\tilde{x}(k|k-1)\tilde{x}'(k|k-1)\}H'(k)K_j'(k) \\
& + K_i(k)H(k)E\{\tilde{x}(k|k-1)v'(k)\}K_j'(k) \\
& - K_i(k)E\{v(k)\tilde{x}'(k-j|k)\} \\
& + K_i(k)E\{v(k)\tilde{x}(k|k-1)\}H'(k)K_j(k) \\
& + K_i(k)E\{v(k)v'(k)\}K_j(k)
\end{aligned} \tag{2.106}$$

The third, sixth, seventh and eighth terms vanish since Eq. (2.94) vanishes. Thus Eq. (2.106) may be written

$$\begin{aligned} P(k-i,k-j|k) = {} & P(k-i,k-j|k-1) \\ & - P(k-i,k|k-1)H'(k)K_j'(k) \\ & - K_i(k)H(k)P(k,k-j|k-1) \\ & + K_i(k)H(k)P(k,k|k-1)H'(k)K_j'(k) \\ & + K_i(k)R(k)K_j'(k) \end{aligned} \tag{2.107}$$

But from Eq. (2.100)

$$P(k-i,k|k-1)H'(k) = K_i(k)[H(k)P(k,k|k-1)H'(k) + R(k)]^{-1}$$

so that the second term of Eq. (2.107) cancels the fourth and fifth terms and Eq. (2.107) becomes

$$P(k-i,k-j|k) = P(k-i,k-j|k-1) - K_i(k)H(k)P(k,k-j|k-1) \tag{2.108}$$

which completes the proof of Eq. (2.83) of Theorem 2.3.

Finally, it may be demonstrated that $\{\tilde{x}(k+1|k+1), k = 0, 1, \ldots\}$ is a zero mean Gauss-Markov -(J+1) sequence. Substitution of Eq. (2.67) into Eq. (2.105) yields

$$\begin{aligned} \tilde{x}(k+1-i|k+1) &= \tilde{x}(k+1-i|k) - K_i(k+1)H(k+1)\tilde{x}(k+1|k) - K_i(k+1)v(k+1) \\ &= \tilde{x}(k+1-i|k) - K_i(k+1)H(k+1)\Big[\sum_{i=0}^{J} \phi_i(k+1,k)\tilde{x}(k-i|k) \\ &\qquad - \Gamma(k+1,k)w(k)\Big] - K_i(k+1)v(k+1) \\ &\qquad i = 0, 1, \ldots, J \end{aligned}$$

By definition $w(k)$ and $v(k+1)$ are independent zero mean Gauss-Markov sequences. It was shown in Section 2.5 that $\{x(k+1|k), k = 0, 1, \ldots\}$ is a zero mean Gauss-Markov-(J+1) sequence which is independent of $w(k)$ and $v(k+1)$. Therefore, $\tilde{x}(i|0)$ is a zero mean

random n-vector independent of $w(k)$ and $v(k+1)$ for all $k = 0, 1, \ldots$. In addition, $[E\{x(-i|0)\}, i = 0, 1, \ldots, J]$ is a zero mean random n-vector independent of $w(k)$ and $v(k+1)$ for all $k = 0, 1, \ldots$ by definition and Eqs. (2.19) and (2.20). However, $\tilde{x}(i|0)$ is not independent of $\{x(-i|0), i = 0, 1, \ldots, J\}$ as is shown by (2.67). Therefore, it must be concluded that $\{\tilde{x}(k+1-i|k+1), i = 0, 1, \ldots, J\}$ is a Gauss-Markov -(J+1) sequence. This concludes the proof of Theorem 2.3.

2.6.1 Estimation in Systems With No Time Delay

It is of interest to examine the results of Theorem 2.3 for the case where there is no time delay. This is easily done by setting $J = 0$ in Theorem 2.3 and results in the following theorem:

Theorem 2.4. (a) The optimal filtered estimate $\hat{x}(k+1|k+1)$ for the system described by Eq. (2.5) and Eq. (2.6) is given by the recursive relation

$$\hat{x}(k+1|k+1) = \hat{x}(k+1|k) + K(k+1)[z(k+1) - \hat{x}(k+1|k)] \quad (2.109)$$

for $k = 0, 1, \ldots$ where $\hat{x}(0|0) = 0$.

(b) $K(k+1)$ is an $n \times m$ matrix which is specified by the set of relations

$$K(k+1) = P(k+1|k)H'(k+1)[H(k+1)P(k+1|k)H'(k+1) + R(k+1)]^{-1} \quad (2.110)$$

$$P(k+1|k) = \phi(k+1,k)P(k|k)\phi'(k+1,k) + \Gamma(k+1,k)Q(k)\Gamma'(k+1,k) \quad (2.111)$$

$$P(k+1|k+1) = [I - K(k+1)H(k+1)]P(k+1|k) \quad (2.112)$$

for $k = 0, 1, \ldots$, where I is the $n \times n$ identity matrix and $P(0|0) = P(0)$ is the initial condition for Eq. (2.111).

(c) The stochastic process $\{\tilde{x}(k+1|k+1),\ k=0,1,\ldots\}$ which is defined by the filtering error relation $\tilde{x}(k+1|k+1) = x(k+1) - \hat{x}(k+1|k+1)$ is a zero mean Gauss-Markov sequence whose covariance matrix is given by Eq. (2.112).

Thus the results of Theorem 2.3 reduce to the familiar Kalman filter when no delay is present in the system.

2.7. Computational Aspects

One of the significant features of the filter developed in Sections 2.5 and 2.6 is its recursive form. The measurements can be processed as they occur and there is no need to store any measurement data. In fact, so far as storage of the measurement and state is concerned, only $\{\hat{x}(k-i|k),\ i = 0, 1, \ldots, J\}$ need be stored in proceeding from time k to time k + 1.

The information flow in the filter can be discussed by considering the block diagram of Figure 2.2.

Suppose that $\{\hat{x}(k-i|k),\ i = 0, 1, \ldots, J\}$ is known for some k and that it is desired to determine $\hat{x}(k+1|k+1)$ given $z(k+1)$. The computational cycle would proceed as follows:

1. The estimates $\{\hat{x}(k-i|k),\ i = 0, 1, \ldots, J\}$ are "propagated forward" by premultiplying them by the state transition matrices, $\phi_i(k+1,k)$. The sum of these is added to $\psi(k+1,k)u(k)$, giving the predicted estimate $\hat{x}(k+1|k)$.

2. $\hat{x}(k+1|k)$ is premultiplied by $H(k+1)$ giving $\hat{z}(k+1|k)$ which is subtracted from the actual measurement $z(k+1)$ to obtain the <u>measurement residual</u> $\tilde{z}(k+1|k)$.

3. The residual is premultiplied by the matrix $K_0(k+1)$ and the result is added to $\hat{x}(k+1|k)$ to give $\hat{x}(k+1|k+1)$. At the same time, the delayed residual $\tilde{z}(k|k-1)$ is premultiplied by $K_i(k)$. The <u>ith</u> sum is added to various delayed sums as indicated in Fig. 2.2 to give $\{\hat{x}(k+1-i|k+1),\ i = 0, 1, \ldots, J\}$.

4. $\{x(k+1-i|k+1),\ i = 0, 1, \ldots, J\}$ is stored until the next measurement is made at which time the cycle is repeated.

The interplay between prediction, filtering and smoothing is evident at this point. It can be observed that each estimate is obtained using the other. The filter equations are

$$\hat{x}(k+1|k) = \sum_{i=0}^{J} \phi_i(k+1,k)\hat{x}(k-i|k) + \psi(k+1,k)u(k) \tag{2.113}$$

$$\hat{x}(k+1-i|k+1) = \hat{x}(k+1-i|k) + K_i(k+1)[z(k+1)-\hat{x}(k+1|k)] \tag{2.114}$$

To initiate filtering, $\{\hat{x}(-i|0) = 0,\ i = 0, 1, \ldots, J\}$ is used and Eq. (2.114) can be solved. The equations then proceed recursively as described in the four steps above.

Consider next the computation of the filter gain matrices $\{K_i(k+1),\ i = 0, 1, \ldots, J\}$ and the three covariance matrices $P(k+1,k+1|k)$, $\{P(k-j,k+1|k),\ j = 0, 1, \ldots, J-1\}$ and $\{P(k-i,k-j|k),\ i,j = 0, 1, \ldots, J\}$. The relevant equations are

$$P(k+1,k+1|k) = \sum_{i=0}^{J} \sum_{j=0}^{J} \phi_i(k+1,k)P(k-i,k-j|k)\phi_j'(k+1,k)$$

$$+ \Gamma(k+1,k)Q(k)\Gamma'(k+1,k) \qquad (2.115)$$

$$K_i(k+1) = P(k+1-i,k+1|k)H'(k+1)[H(k+1)P(k+1,k+1|k)H'(k+1)$$

$$+ R(k+1)]^{-1}, \; i = 0, 1, \ldots, J \qquad (2.116)$$

$$P(k-j,k+1|k) = \sum_{i=0}^{J} P(k-j,k-i|k)\phi_i'(k+1,k), \; j = 0, 1, \ldots, J-1 \qquad (2.117)$$

$$P(k-i,k-j|k) = P(k-i,k-j|k-1) - K_i(k)H(k)P(k,k-j|k-1)$$

$$i, j = 0, 1, \ldots, J \qquad (2.118)$$

for $k = 0, 1, \ldots$, with $P(-i,-j|0) = E\{x(-i)x'(-j)\}$; $i,j=0,1,\ldots,J$.

A typical computation cycle would proceed as follows:

1. Given $P(k|k)$, $Q(k)$, $\{\phi_i(k+1,k), i = 0, 1, \ldots, J\}$ and $\Gamma(k+1,k)$; $P(k+1,k+1|k)$ and $\{P(k-j,k+1|k), j = 0, 1, \ldots, J-1\}$ are computed using Eq. (2.115) and Eq. (2.116) respectively.

2. $P(k+1,k+1|k)$, $\{P(k-j,k+1|k), k = 0, 1, \ldots, J-1\}$, $H(k+1)$ and $R(k+1)$ are substituted into Eq. (2.117) to obtain $\{K_i(k+1), i=0,1,\ldots,J\}$ which is used in Step 3 of the filter computations discussed in the previous paragraphs.

3. $P(k+1,k+1|k)$, $\{P(k-j,k+1|k), j = 0, 1, \ldots, J-1\}$, $\{K_i(k+1, i = 0, 1, \ldots, J\}$ and $H(k+1)$ are substituted into Eq. (2.118) to yield $\{P(k-i+1,k-j+1|k+1), i, j = 0, 1, \ldots, J\}$. These values are stored until the time of the next measurement when the cycle is repeated.

The matrix inverse which must be computed in Eq. (2.117) generally poses no real problem. The matrix to be inverted is m x m, where m is the number of elements in the measurement vector. In most systems

m is kept small to avoid the high cost of complex instrumentation. Consequently, it is not unusual to encounter systems with 20 state variables but only 2 or 3 measurement variables.

CHAPTER III

OPTIMAL CONTROL OF LINEAR DISCRETE-TIME STOCHASTIC SYSTEMS WITH TIME DELAY

3.1 Introduction

The problem considered in this chapter is that of controlling a system which is subject to disturbances and measurement errors such that some measure of the system's behavior is optimized. It is shown, in addition, that the results may also be applied to the deterministic case. Neither the stochastic nor deterministic results obtained here have appeared in previous literature.

Section 3.2 establishes the particular class of problems to be solved, the system model being that defined in Chapter 2. The performance measure is the expected value of a quadratic form in the state and control variables over a fixed interval of time. The resulting problem is called the stochastic linear regulator problem.

Section 3.3 reviews previous work in the area of control of time delay systems. The majority of the work has been done for open-loop deterministic continuous time systems. Very little appears in the literature on discrete-time systems and even less on the stochastic control problem for systems with time delay.

Section 3.4 introduces the concept of optimality and applies it to obtain the solution to the stochastic control problem. In Section 3.5 the computational aspects of implementing the algorithm are presented.

In Section 3.6 those results are converted to that for a deterministic system and the separation principle of estimation and control is discussed in light of these results. The separation principle states that the optimal control system consists of the optimal filter in cascade with the deterministic optimal controller. The result is also shown to reduce to the standard optimal controller when no time delays are present in the system.

3.2 Problem Formulation

In this section the system model is presented as in Chapter 2. The quadratic performance measure of interest is defined. Physically realizable controls are discussed and the problem statement formulated.

3.2.1 System Model

The system model is defined by the relations

$$x(k+1) = \sum_{i=0}^{J} \phi_i(k+1,k)x(k-i) + \Gamma(k+1,k)w(k) + \psi(k+1,k)u(k) \quad (3.1)$$

$$z(k+1) = H(k+1)x(k+1) + v(k+1) \quad (3.2)$$

for $k = 0, 1, 2, \ldots$. The model is the same as that formulated in Section 2.2.3 and for which the optimal estimation problem was solved. The following definitions and properties are repeated for reference.

x = n vector (state)

u = r vector (control)

w = p vector (plant disturbance)

z = m vector (measurement)

v = m vector (measurement disturbance)

ϕ_i = n x n (state transition matrix associated with the delayed state vector $x(k-i)$)

Γ = n x p (disturbance transition matrix)

ψ = n x r (control transition matrix)

H = m x n (measurement matrix)

$\{x(-i),\ i=0,1,\ldots,J\}$ = zero mean gaussian random n vector with positive semi-definite covariance matrix $P(-i,-j) = E\{x(-i)x'(-j)\},\ i,j=0,1,\ldots,J$ (3.3)

$\{w(k),\ k=0,1,2,\ldots\}$ = zero mean gaussian white sequence which is independent of $\{x(-i),\ i=0,1,\ldots,J\}$ and has a p x p positive semidefinite covariance matrix $Q(k)$, $k=0,1,\ldots$. (3.4)

$\{v(k+1),\ k=0,1,\ldots\}$ = zero mean gaussian white sequence which is independent of $\{x(-i),\ i=0,1,\ldots,J\}$ and $\{w(k),\ k=0,1,\ldots\}$ and has an m x m positive semidefinite covariance matrix $R(k+1)$, $k=0,1,\ldots$. (3.5)

$\{u(k),\ k=0,1,\ldots\}$ = control sequence which is either known or can be specified as desired. (3.6)

The following properties are recalled from Section 2.5.1 and are needed for the development of Section 3.4.

1. $\{x(i),\ i = 0, 1, \ldots\}$ is a Gauss-Markov-(J+1) sequence (3.7)
2. $x(i)$ and $w(i)$ are statistically independent for all $i = 0, 1, \ldots$.

3. $z(i)$ and $w(j)$ are statistically independent for all $j \geq i$, $i = 1, 2, \ldots$, (3.9)

In addition to these properties, the system equations (3.1) and (3.2) must be "controllable," A discussion of "controllability" is presented in Appendix A. In general, a system is said to be controllable, if, for the corresponding deterministic system, any initial state $x(0)$ can be transferred to any final state $x(t_f)$ in a finite time, $t_f \geq 0$, by some control u. If a system is not controllable, then there is no guarantee that a control sequence $\{u(k), k = 0, 1, \ldots\}$ can be found which transfers the system to some desired final state from arbitrary initial conditions.

3.2.2 Performance Measure

A control sequence $\{u(k), k = 0, 1, \ldots\}$ is to be constructed to control the state $\{x(k), k = 0, 1, \ldots\}$ of the system over some fixed interval of time $[0,N]$, N = positive integer, such that the performance measure

$$J_N = E\{\sum_{i=1}^{N} [x'(i)A(i)x(i) + u'(i-1)B(i-1)u(i-1)]\} \tag{3.10}$$

is minimized. $A(i)$ and $B(i)$ are symmetric positive semidefinite matrices which are $n \times n$ and $r \times r$ respectively and $E\{\cdot\}$ denotes the expected value operation. The expectation is over x and u.

J_N is usually interpreted as a "system error plus control effort" measure of performance. The first term on the right-hand side of Eq. (3.10) implies that the desired state is zero. If at each point i, the desired state is some arbitrary $x_d(i)$, then $x(i)$ would be replaced in

Eq. (3.10) by $x(i) - x_d(i)$.

Although $x_d(i) = 0$ for the system model of this paper, this is not a requirement for obtaining a solution. Unfortunately, if $x_d(i) \neq 0$, the mathematical development is quite complicated and obscures the basic results. This is obvious from the results obtained by Williams[6] for the case where no time delays are present. Thus, as a matter of mathematical convenience $x_d(i)$ is chosen equal to zero. Note that the quadratic nature of the term implies that the measure of error here is one of error-squared and actually of weighted-error-squared because of the freedom in choosing $A(i)$.

The second term of Eq. (3.10) is sometimes called "control energy" as a consequence of the quadratic nature of the term. As with the first term it is referred to as "weighted control effort" because of the arbitrary nature of $B(i-1)$.

Thus J_N may be viewed as a measure which provides for a trade-off between system error and control input. The relative importance of the two terms is reflected in the choice of $A(i)$ and $B(i-1)$. Because J_N is monotone and non-decreasing, a unique minimum exists for the control sequence $\{u(i-1),\ i = 1, \ldots, N\}$ which minimizes J_N.

3.2.3 Physically Realizable Controls

The control sequence $\{u(i-1),\ i = 1, \ldots, N\}$ which minimizes Eq. (3.10) is not arbitrary. For example, the solution may lead to control sequences which cannot be mechanized in practice, such as those which require input data that is not physically available when required. Additionally, since it is anticipated that variations in the system's

state occur, it is desirable to have the control sequence depend upon information which is available about the state, namely, the measurements. Thus the control sequence is to involve feedback. If no plant disturbances were present and if the initial conditions were perfectly known then an open-loop control law would be satisfactory, assuming, however, the plant is precisely known. Plant and measurement disturbances, however, in the system described by Eqs. (3.1) and (3.2) make a feedback control law necessary! In the sequel, the control sequences depend only upon information about the system's state which is available for processing.

For any given $k = 0, 1, \ldots, N-1$ it is obvious that the available data on the system's state consists of the sequence of measurements $\{z(1), \ldots, z(k)\}$ and the mean value of the delayed initial states $\{\bar{x}(-i), i = 0, \ldots, J\}$. The control vector at k can then be written in the form

$$u(k) = \mu_k[z^*(k), \bar{x}^*(0)] \tag{3.11}$$

where $z^*(k)$ is the mk vector

$$z^*(k) = \begin{bmatrix} z(1) \\ \vdots \\ z(k) \end{bmatrix} \tag{3.12}$$

and $\bar{x}^*(0)$ is the n(J+1) vector

$$\bar{x}^*(0) = \begin{bmatrix} \bar{x}(0) \\ \bar{x}(-1) \\ \vdots \\ \bar{x}(-J) \end{bmatrix} \tag{3.13}$$

and μ_k is an r-dimensional vector-valued function of the indicated variables. Note that μ_k is to be determined such that J_N is minimized and it is not necessarily restricted to be of the same form for all k.

A control vector of the type defined by Eq. (3.11) which depends only on available data is a physically realizable control and μ_k, $k = 0, 1, \ldots, N-1$ is a physically realizable control law. For $k = 0$, $u(0)$ can only be a function of $\bar{x}^*(0)$ since no measurements are available. If μ_k is independent of $z^*(k)$ for all k, then $\mu(k)$ is an open-loop control law.

3.2.4 Problem Statement

The problem can now be stated as follows.

"Determine a physically realizable control law of the form (3.11) for the system described by Eqs. (3.1) and (3.2) which minimizes the quadratic performance measure (3.10)."

Such a control law is called an optimal control and the problem itself is called the discrete stochastic linear regulator problem (with delay). The word "regulator" arises because $x_d(i)$ = constant.

3.2.5 Discussion

Three important restrictions on the class of problems are:

1. The performance index is time independent. The terminal time itself may not be part of the performance index.

2. No amplitude bounds are placed on the control vector. However, the second term in J_N tends to limit excessive control.

3. The state at the terminal time is not constrained. As with the control vector, the state at the terminal time may only be affected indirectly through judicious selection of A(i) in the performance measure.

3.3. Review of Previous Work on Optimal Control of Linear Systems with Time Delay

Attention is restricted below to work appearing in the literature which may be applied to the stochastic control problem with time delays in the plant.

Thus, the large number of papers which develop open-loop control are omitted. Similarly, those papers which employ unity feedback and vary only the gain in the forward path are not discussed. Briefly, then, the papers discussed below have the following characteristics:

1. Use of state-variable feedback
2. Presence of delays in plant

The reader interested in other characteristics of the control of time delay systems is referred to the extensive bibliography compiled in the bibliography.

A number of approximate techniques appear in the literature (Bibliography: 73, 116, 118, 157, 159, 161, 164, 212). These methods use either a Padé [7] approximation to the time delay which expresses e^{-ST} as a ratio of polynomials in s or they express the delayed state x(t-h) as a Taylor Series.

$$x(t-h) = x(t) - h\dot{x}(t) + \frac{h^2\ddot{x}(t)}{2!} - \ldots$$

Once either of these approximations is made, the problem may then be treated as one with no delays and the well-known optimal control results may be applied. Since, by definition, these methods are approximate, they yield a sub-optimal solution and are not discussed further. It is recognized, however, that such methods may be very good, depending on the accuracy of the approximation.

In 1969, Eller et al[8] developed an exact deterministic control law for continuous systems with time delay. The solution, however, is similar in form to the estimation solution by Kwakernaak[3] mentioned earlier and suffers from the same computational disadvantages. Both results are limited to plants with a single delay, although the authors suggest that the theoretical results may be easily extended to include multiple delays. It should be remarked, however, that even for a single delay the computation is so excessive that with a large computer (CDC 6600) only scalar examples are worked.

In 1969 Koivo[9] derived the solution to the stochastic control problem for continuous systems with time delay. He showed it to be the same as the result obtained by Eller et al, thus verifying that the separation principle also holds for continuous systems with time delay.

Larson and Wells [4] overcame some of the computational problems in a paper published in 1969. Attention is restricted to serial systems, where the delay is in the forward path only, but this represents a large number of practical problems. Their results obtained are optimal only for single input-single output systems, however.

The expanded state representation for discrete systems with time delay presented in Chapter 4 of this dissertation was first introduced by Koepcke[10] in 1964. An alternate form of the expanded state representation was later used by Day[11] in 1968. The results achieved by both authors require extensive computation and storage.

The results obtained in the remainder of this chapter can also be obtained by examining the submatrices of the solutions of Koepcke and Day. Solutions of these submatrices requires considerably less computation and storage time.

3.4 Stochastic Control Problem

3.4.1 Problem Formulation

From Eqs. (3.1), (3.10) and (3.11) the problem becomes

$$x(k+1) = \sum_{i=0}^{J} \phi_i(k+1,k)x(k-i) + \Gamma(k+1,k)w(k) + \psi(k+1,k)u(k) \tag{3.14}$$

$$z(k+1) = H(k+1)x(k+1) + v(k+1)$$

$$J_N = E\{\sum_{i=1}^{N} x'(i)A(i)x(i) + u'(i-1)B(i-1)u(i-1) \tag{3.15}$$

$$u(k) = \mu_k[z^*(k),\bar{x}^*(0)] \tag{3.16}$$

where $z^*(k)$ is the mk vector

$$z^*(k) = \begin{bmatrix} z(1) \\ \cdot \\ \cdot \\ \cdot \\ z(k) \end{bmatrix} \tag{3.17}$$

and $\bar{x}^*(0)$ is the (J+1) vector

$$\bar{x}^*(0) = \begin{bmatrix} \bar{x}(0) \\ \vdots \\ \bar{x}(-J) \end{bmatrix} \tag{3.18}$$

In the deterministic case, the expected value would be removed from the expression for J_N, and the measurement process would become $z(k+1) = H(k+1)x(k+1)$. Assuming the system is observable, the state variables could be calculated exactly, and the uncertainty associated with the delayed initial states would be removed. The estimates $\{\bar{x}(-i), i=0, 1, \ldots, J\}$ would be replaced by the actual values of the delayed initial states, $\{x(-i), i=0, 1, \ldots, J\}$. The stochastic regulator problem may now be stated.

3.4.2 Problem Statement

Determine a control law of the form (3.16) for the system of Eq. (3.14) which minimizes the performance measure in Eq. (3.15).

The resulting system has the block diagram which is given in Fig. 3.1. The problem is to specify the controller which will operate upon the output states, $z(k+1)$, to determine the control vector which minimizes the performance measure. In general, the resulting control law could involve feedback of all the preceding values of the measurement vector. From a computational point of view this poses a similar problem to that of estimation discussed in Section 2.5. By applying the Principle of Optimality to this problem (discussed in the next paragraph) a set of recurrence equations are found which resolve this problem quite

C-2

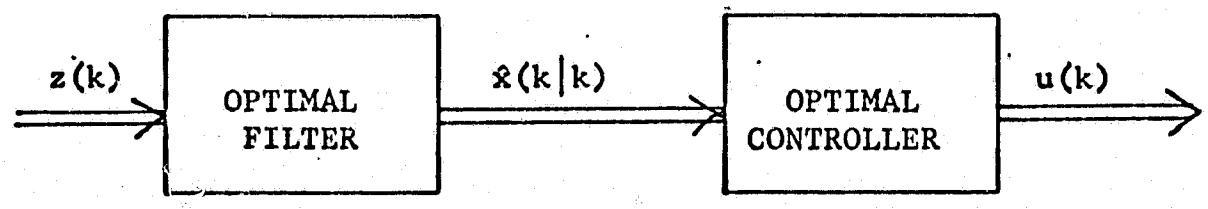

Figure 3.1 Block Diagram of Optimal Filter and Optimal Controller

handily. Another problem is that of determining the optimal controller when not all of the states are available for measurement. The separation principle, which was first suggested by Kalman and Koepcke[12] and later proved by Joseph[13] and Gunchel[14] provides a neat solution to this question. This important result reduces the optimization problem to two separate optimization problems, one of estimation, the other of control. It states that the optimal controller is the same as the deterministic controller which operates on the optimal state estimates as if they were the actual values of the states. In this chapter the separation principle is modified slightly and also shown to apply to the delay case. The stochastic control solution is shown to rely upon the availability of the optimal estimates of the delayed states for implementation. Subsequent comments are made to show that the deterministic controller and the stochastic controller are the same.

3.4.3 Principle of Optimality

The principle of optimality may be stated as follows:

Theorem 3.1. For any initial state and initial control, the remaining optimal control at any subsequent time must constitute an optimal one for the remainder of the trajectory.

A simple interpretation of the principle of optimality would be as follows. Suppose that, for some discrete-time system whose initial state is $x(-i)$, the optimal control $\{u_0(t),\ t_1 \leq t \leq t_z\}$ minimizes some performance measure J over the interval $[t_1, t_2]$. Then the principle of

optimality states that the control $\{u^o(t),\ t' \leq t \leq t_2\}$ minimizes the same J for the same system over the interval $[t', t_2]$ with the initial state $x(t')$ which resulted from $u^o(t)$ acting over the interval $[t_1, t']$.

A proof of Theorem 3.1 is given in Meditch[5] (p. 331) and is a powerful result for use in the solution of control systems optimization problems. In discrete-time problems with no delay, the problem can be reduced from one of determining an entire control sequence at once to one of determining the control as a function of a state of time k based on the results at time k + 1. For the discrete time problem <u>with</u> delay the same technique again results in a set of recursive equations for the control.

3.5 Stochastic Control Problem For Systems With Time Delay

V_N is defined to be the minimum value of the performance measure J_N in (3.15),

$$V_N = \min_{u(0)} \ldots \min_{u(N-1)} E\{\sum_{i=1}^{N} x'(i)A(i)x(i) + u'(i-1)B(i-1)u(i-1)\} \tag{3.19}$$

The problem is one of selecting rN variables, namely u(0),u(1), ... , u(N-1) to minimize J_N. A Lagrangian formulation would require the solution of rN algebraic equation subject to the constraints expressed by the system equation (3.14). Even for modest problems this approach demands excessive computation.

The problem can also be viewed as an N-stage decision process where the N decisions, u(0),u(1), ... , u(N-1) minimize the quadratic cost. By applying the principle of optimality the decisions are made

one at a time, rather than simultaneously, the N-stage problem is reduced to N one-stage problems. This technique starts with the final stage of control and uses induction to proceed backwards in time to an arbitrary initial time as shown below.

3.5.1 Single-stage

Suppose that the problem is simply that of selecting a control which minimizes the performance measure for the last stage of control. That is, the problem is a single-stage optimization problem

$$V_1 = \min_{u(N-1)} E\{x'(n)A(N\,x(N) + u'(N-1)B(N-1)u(N-1)\} \tag{3.20}$$

However, from Eq. (3.14)

$$x(N) = \sum_{i=0}^{J} \phi_i(N,N-1)x(N-i) + \Gamma(N,N-1)w(N-1) + \psi(N,N-1)u(N-1) \tag{3.21}$$

Substituting this result into Eq. (3.20) and dropping most time indices for convenience

$$V_1 = \min_{u(N-1)} E\{[\sum_{i=0}^{J} x'(N-i-1)\phi_i' + u'\psi' + w'\Gamma']A[\sum_{j=0}^{J} \phi_j x(N-j-1) + \psi u + \Gamma w] + u'Bu] \tag{3.22}$$

By noting that the individual product terms are scalars and that A is symmetric, the terms may be combined to yield

$$V_1 = \min_{u(N-1)} E\{\sum_{i=0}^{J}\sum_{j=0}^{J} x'(N-i-1)\phi_i'A\phi_j x(N-j-1) + 2u'\psi'A\sum_{i=0}^{J} \phi_i x(N-i-1) + 2w'\Gamma'A\sum_{i=0}^{J} \phi_i x(N-i-1) + 2u'\psi'A\Gamma w + u'[\psi'A\psi+B]u + w'\Gamma'A\Gamma w\} \tag{3.23}$$

where the indicated expected value is over x, w and u. Making use of the matrix identity

$$\text{trace (ABC)} = \text{trace (BCA)} = \text{trace (CAB)}$$

and since each term in Eq. (3.23) is a scalar the third and fourth terms of Eq. (3.23) vanish

$$\dot{E}\{w'\Gamma'A\sum_{i=0}^{J}\phi_i x(N-i-1)\} = \dot{E}\{\mathrm{tr}[\Gamma'A\sum_{i=0}^{J}\phi_i x(N-i-1)w'(N-1)]\}$$

$$= \mathrm{trace}[\Gamma'A\sum_{i=0}^{J}\phi_i \dot{E}\{x(N-i-1)w'(N-1)\}]$$

$$= 0 \qquad \text{by property (3.8).} \tag{3.24}$$

Similarly, $\dot{E}\{u'\psi'A\Gamma w\} = u'\psi'A\Gamma\dot{E}\{w\} = 0$ (3.25)

by properties (3.6) and (3.4).

From Chapter 2 the property of conditional expectation gives $\dot{E}\{x\} = \dot{E}\{E(x|y)\}$, where the outer expectation on the right-hand side is over y, thus allowing Eq. (3.23) to be rewritten

$$V_1 = \min_{u(N-1)} \dot{E}\{E[\sum_{i=0}^{J}\sum_{j=0}^{J} x'(N-i-1)\phi_i'A\phi_j x(N-j-1)$$

$$+ 2u'\psi'A\sum_{i=0}^{J}\phi_i x(N-i-1) + u'[\psi'A\psi + B]u$$

$$+ w'\Gamma'A\Gamma w \,|\, z^*(N-1), \bar{x}^*(0)]\} \tag{3.26}$$

This equation can be minimized by minimizing the inner expected value in Eq. (3.26) with respect to u(N-1) for all $z^*(N-1)$ and $\bar{x}^*(0)$. The physical realizability condition requires that u(N-1) be some deterministic function of $z^*(N-1)$ and $\bar{x}^*(0)$. Thus the second and third terms of Eq. (3.26) become respectively

$$\dot{E}\{2u'\psi'A\sum_{i=0}^{J}\phi_i x(N-i-1)\Big|z^*(N-1),\bar{x}^*(0)\}$$

$$= 2u'\psi'A\sum_{i=0}^{J}\phi_i\dot{E}\{x(N-i-1)\Big|z^*(N-1),\bar{x}^*(0)\} \quad (3.27)$$

and $\dot{E}\{u'[\psi'A\psi + B]u\Big|z^*(N-1),\bar{x}^*(0)\} = u'[\psi'A\psi + B]u$ (3.28)

Now, setting the gradient of the inner expected value of Eq. (3.26) equal to zero,

$$\frac{\partial V_1}{\partial u(N-1)} = 0 = 2\psi'A\sum_{i=0}^{J}\phi_i\dot{E}\{x(N-i-1)\Big|z^*(N-1),\bar{x}^*(0)\}$$

$$+ 2[\psi'A\psi + B]u(N-1) \quad (3.29)$$

and solving for u(N-1), expression (3.30) is obtained.

$$u(N-1) = -[\psi'A\psi + B]^{-1}\psi'A\sum_{i=0}^{J}\phi_i\hat{x}(N-i-1|N-1) \quad (3.30)$$

where $\psi = \psi(N,N-1)$

$\phi_i = \phi_i(N,N-1)$

$B = B(N-1)$

$A = A(N)$ (3.31)

Notice that the separation principle is evident in this one-stage case. The optimal control is a set of gain matrices each of which is associated with a separate filtered estimate, where the gain matrices and filters are computed independently. Define

$W_{00}(N) \equiv A(N)$ and (3.32)

note that $W_{00}(N) = W_{00}'(N)$ since A(N) is symmetric.

$S_i(N-1) \equiv -[\psi'A\psi + B]\psi'A\phi_i$ (3.33)

and write $u(N-1) = \sum_{i=0}^{J} S_i(N-1)\hat{x}(N-i-1|N-1)$ (3.34)

V_1 may now be evaluated by substituting Eq. (3.31) into Eq. (3.23) (less the third and fourth terms).

$$V_1 = E\{\sum_{i=0}^{J}\sum_{j=0}^{J} x'(N-i-1)\phi_i' W_{00}\phi_j x(N-j-1)$$

$$- 2\sum_{i=0}^{J}\sum_{j=0}^{J} \hat{x}'(N-i-1|N-1)\phi_i' W_{00}\psi[\psi' W_{00}\psi+B]^{-1}\psi' W_{00}\phi_j x(N-j-1)$$

$$+ \sum_{i=0}^{J}\sum_{j=0}^{J} \hat{x}'(N-i-1|N-1)\phi_i' W_{00}\psi[\psi' W_{00}\psi+B]^{-1}[\psi' W_{00}\phi+B]$$

$$\cdot [\psi' W_{00}\psi+B]^{-1}\psi' W_{00}\phi_j \hat{x}(N-j-1|N-1) + w'\Gamma' W_{00}\Gamma w\} \quad (3.35)$$

This expression may be simplified by noting that

$$\hat{x}(N-i-1|N-1) = x(N-i-1) - \tilde{x}(N-i-1|N-1) \quad (3.36)$$

Then, letting Λ_{ij} denote the n x n matrix

$$\Lambda_{ij} \equiv \phi_i' W_{00}\psi[\psi' W_{00}\psi+B]^{-1}\psi' W_{00}\phi_j \quad (3.37)$$

The second and third terms may be combined in the following way.

$$\sum_{i=0}^{J}\sum_{j=0}^{J} [-2\hat{x}'(N-i-1|N-1)\Lambda_{ij}x(N-j-1) + \hat{x}'(N-i-1|N-1)\Lambda_{ij}\hat{x}(N-j-1|N-1)]$$

$$= \sum_{i=0}^{J}\sum_{j=0}^{J} [-2(x_i'-\tilde{x}_i')\Lambda_{ij}x_j + (x_i'-\tilde{x}_i')\Lambda_{ij}(x_j-\tilde{x}_j)]$$

$$= \sum_{i=0}^{J}\sum_{j=0}^{J} [-2x_i'\Lambda_{ij}x_j + 2\tilde{x}_i'\Lambda_{ij}x_j + x_i'\Lambda_{ij}x_j - \tilde{x}_i'\Lambda_{ij}x_j$$

$$- x_i'\Lambda_{ij}\tilde{x}_j + \tilde{x}_i'\Lambda_{ij}\tilde{x}_j)] \quad (3.38)$$

The second, fourth and fifth terms cancel since each term is a scalar, $\Lambda_{ij} = \Lambda'_{ji}$, and the equation results in a double sum where each sum contributes the same range of indices. Thus Eq. (3.38) reduces to

$$\sum_{i=0}^{J} \sum_{j=0}^{J} (\tilde{x}'_i \Lambda_{ij} \tilde{x}_j - x'_i \Lambda_{ij} x_j) \tag{3.39}$$

Therefore Eq. (3.35) may be written

$$V_1 = \dot{E}\{\sum_{i=0}^{J} \sum_{j=0}^{J} x'_i \phi'_i [W_{00} - W_{00}\psi[\psi' W_{00}\psi + B]^{-1}\psi' W_{00}]\phi_j x_j\}$$

$$+ \dot{E}\{\sum_{i=0}^{J} \sum_{j=0}^{J} \tilde{x}'_i \Lambda_{ij} \tilde{x}_j\} + \dot{E}\{w'\Gamma' W_{00}\Gamma w\} \tag{3.40}$$

Since the last two terms of Eq. (3.40) are scalars, these terms become

$$\dot{E}\{\sum_{i=0}^{J} \sum_{j=0}^{J} \tilde{x}'_i \Lambda_{ij} \tilde{x}_j + w'\Gamma' W_{00}\Gamma w\}$$

$$= \dot{E}\{\text{trace}[\sum_{i=0}^{J} \sum_{j=0}^{J} \tilde{x}'_i \Lambda_{ij} \tilde{x}_j + w'\Gamma' W_{00}\Gamma w]\}$$

$$= \dot{E}\{\text{trace}[\sum_{i=0}^{J} \sum_{j=0}^{J} \Lambda_{ij} \tilde{x}_j \tilde{x}'_i + \Gamma' W_{00}\Gamma w w']\}$$

$$= \text{trace}[\sum_{i=0}^{J} \sum_{j=0}^{J} \Lambda_{ij} P_{ji} + \Gamma' W_{00}\Gamma Q] \tag{3.42}$$

where P_{ji} is the n x n filtering covariance matrix

$$P_{ji} \equiv P(N-j-1, N-i-1 | N-1) \equiv \dot{E}\{\tilde{x}(N-j-i)\tilde{x}'(N-i-1)\} \tag{3.43}$$

and $$Q \equiv Q(N-1) \equiv E\{w(N-1)w'(N-1)\} \tag{3.44}$$

Denote Eq. (3.42) as $\alpha(N-1)$ and define $M_{ij}(N-1)$ as

$$M_{ij}(N-1) = \phi'_i [W_{00} - W_{00}\psi[\psi' W_{00}\psi + B]^{-1}\psi' W_{00}]\phi_j \tag{3.45}$$

Replacing the time arguments, the above results may now be summarized for the single-stage problem.

$$u(N-1) = \sum_{i=0}^{J} S_i(N-1)\hat{x}(N-i-1|N-1) \tag{3.46}$$

$$S_i(N-1) = -[\psi'(N,N-1)W_{00}(N)\psi(N,N-1) + B(N-1)]^{-1}\psi'(N,N-1)W_{00}(N)\phi_i(N,N-1)$$

$$i = 0, 1, \ldots, J \tag{3.47}$$

$$W_{ij}(N) = \begin{cases} A(N) & i = j = 0 \\ 0 & \text{elsewhere} \end{cases} \tag{3.48}$$

$$V_1 = E\{\sum_{i=0}^{J}\sum_{j=0}^{J} x'(N-i-1)M_{ij}(N-1)x(N-j-1)\} + \alpha(N-1) \tag{3.49}$$

$$M_{ij}(N-1) = \phi_i'(N,N-1)\{W_{00}(N)-W_{00}(N)\psi(N,N-1)[\psi'(N,N-1)W_{00}(N)\psi(N,N-1) + B(N-1)]^{-1}\psi'(N,N-1)W_{00}(N)\}\phi_j(N,N-1)$$

$$= \phi_i'(N,N-1)W_{00}(N)\phi_j(N,N-1) + \phi_i'(N,N-1)W_{00}(N) \cdot \psi(N,N-1)S_j(N-1) \tag{3.50}$$

$$\alpha(N-1) = \text{trace}\{\sum_{i=0}^{J}\sum_{j=0}^{J} \Lambda_{ij}(N-1)P(N-j-1,N-i-1|N-1) + \Gamma'(N,N-1)W_{00}(N)\Gamma(N,N-1)Q(N-1)\} \tag{3.51}$$

$$\Lambda_{ij}(N-1) = S_i'(N-1)[\psi'(N,N-1)W_{00}(N)\psi(N,N-1) + B(N-1)]^{-1}S_j(N-1) \tag{3.52}$$

where the initial conditions are

$$W_{ij}(N+1) = 0, \ \alpha(N) = 0$$

3.5:2 Double-Stage Problem

The two-stage problem may now be written

$$V_2 = \min_{u(N-2)} \min_{u(N-1)} \dot{E}\{[x'(N-1)A(N-1)x(N-1) - u'(N-2)B(N-2)u(N-2)] + [x'(N)A(N)x(N) + u'(N-1)B(N-1)u(N-1)]\} \quad (3.53)$$

where the expected value is over $x(N)$, $x(N-1)$, $u(N-1)$, $u(N-2)$. Note that $u(N-1)$ and $u(N-2)$ are required to be physically realizable. Utilizing the principle of optimality, Eq. (3.53) may be rewritten

$$V_2 = \min_{u(N-2)} \dot{E}\{x'(N-1)A(N-1)x(N-1) + u'(N-2)B(N-2)u(N-2) + V_1\} \quad (3.54)$$

From Eq. (3.49) and (3.51) it can be seen that

$$\dot{E}\{V_1\} = \dot{E}\{E[\sum_{i=0}^{J}\sum_{j=0}^{J} x'(N-i-1)M_{ij}(N-1)x(N-j-1) + \alpha(N-1]\} \quad (3.55)$$

$$= \dot{E}\{\sum_{i=0}^{J}\sum_{j=0}^{J} x'(N-i-1)M_{ij}(N-1)x(N-j-1)\} + \alpha(N-1) \quad (3.56)$$

since the inner expectation of Eq. (3.55) is over x.

Thus Eq. (3.54) can be written

$$V_2 = \min_{u(N-2)} \dot{E}\{x'(N-1)A(N-1)x(N-1) + u'(N-2)B(N-2)u(N-2) + \sum_{i=0}^{J}\sum_{j=0}^{J} x'(N-i-1)M_{ij}(N-1)x(N-j-1)\} + \alpha(N-1) \quad (3.57)$$

$$= \min_{u(N-2)} \dot{E}\{\sum_{i=0}^{J}\sum_{j=0}^{J} x'(N-i-1)W_{ij}(N-1)x(N-j-1) + u'(N-2)B(N-2)u(N-2)\} + \alpha(N-1) \quad (3.58)$$

where $\alpha(N-1)$ is taken out of the minimization procedure since its value does not depend on $u(N-2)$ and the following definition is used

$$W_{ij}(N-1) \equiv \begin{cases} M_{ij}(N-1) + A(N-1) & i = j = 0 \\ M_{ij}(N-1) & i,j = 0,1, \ldots, J \text{ (except } i = j = 0) \\ 0 & i,j > 0 \end{cases} \tag{3.59}$$

Since W and M are symmetric $W_{ij} = W'_{ji}$ and $M_{ij} = M'_{ji}$. This definition is a matter of convenience for later development. Because of the system equation (3.14)

$$x(k+1) = \sum_{i=0}^{J} \phi_i(k+1,k)x(k) + \psi(k+1,k)u(k) + \Gamma(k+1,k)w(k) \tag{3.60}$$

u(k) can only affect x(k+1). Therefore, since $W_{ij} = W'_{ji}$, the minimization of Eq. (3.58) may be rewritten

$$V_2 = \min_{u(N-2)} E\{x'(N-1)W_{00}(N-1)x(N-1) + 2\sum_{j=0}^{J-1} x'(N-1)W_{0,j+1}(N-1)x(N-j-2) + u'(N-2)B(N-2)u(N-2)\} \tag{3.61}$$

Substituting the plant equation (3.60) into Eq. (3.61) and momentarily dropping the time indices

$$V_2 = \min_{u(N-2)} E\{\sum_{i=0}^{J}\sum_{j=0}^{J} x'_i\phi'_i W_{00}\phi_j x_j + 2u'\psi' W_{00}\sum_{i=0}^{J}\phi_i x_i + 2w'\Gamma' W_{00}\sum_{i=0}^{J}\phi_i x_i + 2u'\psi' W_{00}\Gamma w + u'[\psi' W_{00}\psi + B]u + w'\Gamma' W_{00}\Gamma w + 2\sum_{j=0}^{J-1}\sum_{i=0}^{J} x_i\phi'_i W_{0,j+1}x_j + 2\sum_{j=0}^{J-1} u'\psi' W_{0,j-1}x_j + 2\sum_{j=0}^{J-1} w'\Gamma' W_{0,j-1}x_j\} \tag{3.62}$$

As in the development of Eqs. (3.24) and (3.25) for V_1, the third, fourth and ninth terms vanish. Because the terms $x_i = \{x(N-i-2),\ i = 0, \ldots, J\}$ occur at or before N-2, they do not depend on u(N-2). Thus the minimization of (3.62) depends only on the second, fifth and eighth terms.

Utilizing the properties of conditional expectation as in equations (3.23) through (3.26), Eq. (3.62) becomes

$$V_2 = \min_{u(N-2)} \dot{E}\{E[\sum_{i=0}^{J}\sum_{j=0}^{J} x_i'\phi_i'W_{00}\phi_j x_j + 2u'\psi'W_{00}\sum_{i=0}^{J}\phi_i x_i$$

$$+ u'[\psi'W_{00}\psi+B]^{-1}u + w'\Gamma'W_{00}\Gamma w$$

$$+ 2\sum_{j=0}^{J-1}\sum_{i=0}^{J} x_i'\phi_i'W_{0,j+1}x_j + 2\sum_{j=0}^{J-1} u'\psi'W_{0,j+1}x_j \Big| z^*(N-2),\bar{x}^*(0)]\} \tag{3.63}$$

Now Eq. (3.63) is minimized if the inner conditional expectation $\dot{E}\{\cdot \big| z^*(N-2),\bar{x}^*(0)\}$ is minimized with respect to u(N-2). Since $x_i \equiv x(N-i-2)$, then x_i is unaffected by the minimization. Thus the first and fifth terms of Eq. (3.63) are unimportant. Similarly the fourth term is unaffected by the choice of u(n-2). By setting the partial derivative of the inner expectation (less the first, fourth and fifth terms) with respect to u(N-2) to zero

$$\frac{\partial V_2}{\partial u(N-2)} = 0 = \dot{E}\{\psi'W_{00}\sum_{i=0}^{J}\phi_i x_i + [\psi'W_{00}\psi+B]u + \psi'\sum_{i=0}^{J-1}W_{0,i+1}x_i \Big| z^*,\bar{x}^*\} \tag{3.64}$$

By solving for u, this becomes

$$u(N-2) = -[\psi'W_{00}\psi+B]^{-1}\psi'[W_{00}\sum_{i=0}^{J}\phi_i\hat{x}_i + \sum_{i=0}^{J-1}W_{0,i+1}\hat{x}_i] \tag{3.65}$$

Define $S_i(N-2) \equiv -[W_{oo}\phi_i + W_{0,i+1}] \quad i = 0, \ldots, J$ (3.66)

and recall from Eq. (3.59) that $W_{ij} \equiv 0$ if i or $j > J$

$$u(N-2) = \sum_{i=0}^{J} S_i(N-2)\hat{x}(N-i-2|N-2)$$

V_2 may now be evaluated by substituting Eq. (3.60) and Eq. (3.65) into Eq. (3.57), omitting the third, fourth and ninth terms which have been shown to vanish.

$$\begin{aligned}
V_2 = \min_{u(N-2)} E\{ & \sum_{i=0}^{J-1}\sum_{j=0}^{J-1} x_i' W_{i+1,j+1} x_j + \sum_{i=0}^{J}\sum_{j=0}^{J} x_i'\phi_i' W_{00}\phi_j x_j \\
& - 2\sum_{i=0}^{J}\sum_{j=0}^{J} \hat{x}_i'\phi_i' W_{00}\psi[\psi' W_{00}\psi + B]^{-1}\psi' W_{00}\phi_j x_j \\
& - 2\sum_{i=0}^{J-1}\sum_{j=0}^{J} \hat{x}_i' W_{0,i+1}'\psi[\psi' W_{00}\psi + B]^{-1}\psi' W_{00}\phi_j x_j \\
& + \sum_{i=0}^{J}\sum_{j=0}^{J} \hat{x}_i'\phi_i' W_{00}\psi[\psi' W_{00}\psi + B]^{-1}\psi' W_{00}\phi_j \hat{x}_j \\
& + 2\sum_{i=0}^{J}\sum_{j=0}^{J-1} x_i'\phi_i' W_{0,j+1} x_j \\
& + 2\sum_{i=0}^{J}\sum_{j=0}^{J-1} x_i'\phi_i' W_{00}\psi[\psi' W_{00}\psi + B]^{-1}\psi' W_{0,j+1}\hat{x}_j \\
& + \sum_{i=0}^{J-1}\sum_{j=0}^{J-1} \hat{x}_i' W_{0,i+1}'\psi[\psi' W_{00}\psi + B]^{-1}\psi' W_{0,j+1}\hat{x}_j \\
& - 2\sum_{i=0}^{J}\sum_{j=0}^{J-1} \hat{x}_i'\phi_i' W_{00}\psi[\psi' W_{00}\psi + B]^{-1}\psi' W_{0,j+1} x_j \\
& - 2\sum_{i=0}^{J-1}\sum_{j=0}^{J-1} \hat{x}_i' W_{0,i+1}'\psi[\psi' W_{00}\psi + B]^{-1}\psi' W_{0,j+1} x_j
\end{aligned}$$

$$+ w'\Gamma' W_{00}\Gamma w$$

$$+ \alpha(N-1) \tag{3.67}$$

This definition of W expressed by Eq. (3.59) allows all upper limits on the sums to be J. Combining terms, Eq. (3.67) may be rewritten

$$V_2 = \sum_{i=0}^{J} \sum_{j=0}^{J} \dot{E}\{x_i'[W_{i+1,j+1} + \phi_i' W_{00}\phi_j + \phi_i W_{0,j+1}]x_j\}$$

$$+ \dot{E}\{\hat{x}_i'[-2\phi_i' W_{00}\psi[\psi' W_{00}\psi+B]^{-1}\psi' W_{00}\phi_j$$

$$- 2W_{0,i+1}'\psi[\psi' W_{00}\psi+B]^{-1}\psi' W_{00}\phi_j$$

$$- 2\phi_i' W_{00}\psi[\psi' W_{00}\psi+B]^{-1}\psi' W_{0,j+1}$$

$$- 2W_{0,i+1}'\psi[\psi' W_{00}\psi-1B]^{-1}\psi' W_{0,j+1}]x_j\}$$

$$+ \dot{E}\{\hat{x}_i'[\phi_i' W_{00}\psi[\psi' W_{00}\psi+B]^{-1}\psi' W_{00}\phi_j$$

$$+ W_{0,i+1}'\psi[\psi' W_{00}\psi+B]^{-1}\psi' W_{0,j+1}$$

$$+ 2\phi_i' W_{00}\psi[\psi' W_{00}\psi+B]^{-1}\psi' W_{0,j+1}\}\hat{x}_j\}$$

$$+ \dot{E}\{w'\Gamma' W_{00}\Gamma w\} + \alpha(N-1) \tag{3.68}$$

Substituting $\hat{x}_i = x_i - \tilde{x}_i$ in Eq. (3.68) and noting that $\dot{E}\{\tilde{x}'\gamma x\} = \text{tr } E\{\gamma x\tilde{x}'\} = 0$ since the term in parentheses is a scalar

$$V_2 = \sum_{i=0}^{J} \sum_{j=0}^{J} E\{x_i'[W_{i+1,j+1} + \phi_i' W_{00}\phi_j + \phi_i W_{0,j+1}$$

$$- 2\phi_i' W_{00}\psi[\psi' W_{00}\psi+B]^{-1}\psi' W_{00}\phi_j$$

$$- 2W_{0,i+1}'\psi[\psi' W_{00}\psi+B]^{-1}\psi' W_{00}\phi_j$$

$$- 2\phi_i' W_{00}\psi[\psi' W_{00}\psi+B]^{-1}\psi' W_{0,j+1}$$

$$- 2W_{0,i+1}'\psi[\psi' W_{00}\psi+B]^{-1}\psi' W_{0,j+1}$$

$$+ \phi_i' W_{00}\psi[\psi' W_{00}\psi+B]^{-1}\psi' W_{00}\phi_j$$

$$+ W_{0,i-1}'\psi[\psi' W_{00}\psi+B]^{-1}\psi' W_{0,j+1}$$

$$+ 2\phi_i' W_{00}\psi[\psi' W_{00}\psi+B]^{-1}\psi' W_{0,j+1}]x_j\}$$

$$+ E\{\tilde{x}_i'[\phi_i W_{00}\psi[\psi' W_{00}\psi+B]^{-1}\psi' W_{00}\phi_j$$

$$+ W_{0,i+1}'\psi[\psi' W_{00}\psi+B]^{-1}\psi' W_{0,j+1}$$

$$+ 2\phi_i' W_{00}\psi[\psi' W_{00}\psi+B]^{-1}\psi' W_{0,j+1}]\tilde{x}_j\}$$

$$+ E\{w'\Gamma' W_{00}\Gamma w\} + \alpha(N-1) \tag{3.69}$$

Define $\Lambda_{ij} = [\phi_i' W_{00} + W_{i+1,0}][\psi' W_{00}\psi+B]^{-1}[W_{0,j+1} + W_{00}\phi_j]$ (3.70)

Substitution from Eq. (3.65) yields

$$\Lambda_{ij} = S_i'[\psi' W_{00}\psi+B]^{-1} S_j$$

The second expectation of Eq. (3.69) may be written as

$$\dot{E}\{\sum_{i=0}^{J}\sum_{j=0}^{J}\tilde{x}_i'\Lambda_{ij}\tilde{x}_j\} \tag{3.71}$$

Define $M_{ij} \equiv W_{i+1,j+1} + \phi_i'W_{00}\phi_j + \phi_i W_{0,j+1}$

$$- \phi_i'W_{00}\psi[\psi'W_{00}\psi+B]^{-1}\psi'W_{00}\phi_j$$

$$- W_{i+1,0}\psi[\psi'W_{00}\psi+B]^{-1}\psi'W_{0,j+1}$$

$$- 2W_{i+1,0}\psi[\psi'W_{00}\psi+B]^{-1}\psi'W_{00}\phi_j \tag{3.72}$$

Substitution of Eq. (3.66) into Eq. (3.72) yields

$$M_{ij} = W_{i+1,j+1} + \phi_i W_{0,j+1}$$

$$+ [\phi_i'W_{00} + W_{i+1,0}][\phi_j + \psi S_j(k)] \tag{3.73}$$

By letting $\alpha(N-2) = \dot{E}\{\sum_{i=0}^{J}\sum_{j=0}^{J}\tilde{x}_i'\Lambda_{ij}\tilde{x}_j + w'\Gamma'W_{00}\Gamma w + \alpha(N-1)$

$$= \sum_{i=0}^{J}\sum_{j=0}^{J} tr(\Lambda_{ij}P_{ji}) + tr(\Gamma'W_{00}\Gamma Q) + \alpha(N-1) \tag{3.74}$$

The expression for V_2 may now be written from Eq. (3.69) as

$$V_2 = \dot{E}\{\sum_{i=0}^{J}\sum_{j=0}^{J} x_i'M_{ij}x_j\} + \alpha(N-2) \tag{3.75}$$

The results for the two-stage optimization process may now be summarized with the time indices restored in Table 3.1.

Table 3.1

Summary of Optimal Control Algorithm for 2-Stage Sequence

$$u(N-2) = \sum_{i=0}^{J} S_i(N-2)\hat{x}(N-i-2|N-2) \tag{3.76}$$

$$S_i(N-2) = -[\psi'(N-1,N-2)W_{00}(N-1)\psi(N-1,N-2) + B(N-2)]^{-1} \cdot \psi'(N-1,N-2)[W_{00}(N-1)\phi_i(N-1,N-2) + W_{0,i+1}(N-1)] \tag{3.77}$$

$$W_{ij}(N-1) = \begin{cases} A(N-1) + M_{ij}(N-1) & i = j = 0 \\ M_{ij}(N-1) & i,j = 0, \ldots, J \text{ except } i=j=0 \\ 0 & i,j>J \end{cases} \tag{3.78}$$

$$V_2 = E\{\sum_{i=0}^{J}\sum_{j=0}^{J} x'(N-i-2)M_{ij}(N-2)x(N-j-2)\} + \alpha(N-2) \tag{3.79}$$

$$M_{ij}(N-2) = [\phi_i'(N-1,N-2)W_{00}(N-1) + W_{i+1,0}(N-1)][\phi_j(N-1,N-2) + \psi(N-1,N-2)S_j(N-2)] + \phi_i(N-1,N-2)W_{0,j+1}(N-1) + W_{i+1,j+1}(N-1) \tag{3.80}$$

$$\alpha(N-2) = \text{trace}[\sum_{i=0}^{J}\sum_{j=0}^{J} \Lambda_{ij}(N-2)P(N-j-2,N-i-2|N-2)] + \text{trace}[\Gamma'(N-1,N-2)W_{00}(N-1)\Gamma(N-1,N-2)Q(N-2)] + \alpha(N-1) \tag{3.81}$$

$$\Lambda_{ij}(N-2) = S_i'(N-2)[\psi'(N-1,N-2)W_{00}(N-1)\psi(N-1,N-2) + B(N-2)]^{-1}S_j(N-2) \tag{3.82}$$

Despite the complex nature of the various equations, note that the computation for the two-stage process is quite straight forward. First, the feedback gain matrices $\{S_i(N-2),\ S_i(N-1),\ i=0, \ldots, J\}$ are determined and they are used in conjunction with the optimal filtered estimates $\{\hat{x}(N-i-2|N-2), \hat{x}(N-i-1|N-1),\ i=0, \ldots, J\}$ respectively, to implement the control signals. Thus the separation principle is again apparent. Comparison of Eqs.(3.76) through (3.82) with the results for the single-stage case, Eqs. (3.46) through (3.52), the results are seen to be identical except for the change in time index. In effect, Eqs. (3.76) through (3.82) reduce directly to Eqs. (3.46) through (3.52) by recognizing that $W_{00}(N)$ is the only non-zero term of W for the single-stage case.

3.5.3 t-1 Stages

Assume now that the results of the two-stage case may be generalized to t-1 stages. The equations characterizing the control as expressed in Eq. (3.76) through (3.82) then become as in Table 3.2.

3.5.4 t Stages

From the principle of optimality

$$V_t = \min_{u(N-t)} E\{x'(N-t+1)A(N-t+1)x(N-t+1) + u'(N-t)B(N-t)u(N-t) + V_{t-1}\} \tag{3.90}$$

Examine V_{t-1} from Eq. (3.86) and express it in a slightly different form so that the minimization becomes more evident.

Table 3.2

Summary of Optimal Control Algorithm for a (t-1)-Stage Sequence

$$u(N-t-1) = \sum_{i=0}^{J} S_i(N-t-1)\hat{x}(N-t-i+1|N-t+1) \tag{3.83}$$

$$S_i(N-t+1) = -[\psi'(N-t+2,N-t+1)W_{00}(N-t+2)\psi(N-t+2,N-t+1) + B(N-t+1)]^{-1}$$
$$\cdot\psi(N-t+2,N-t+1)[W_{00}(N-t+2)\phi_i(N-t+2,N-t+1) + W_{0,i+1}(N-t+2)]$$
$$i = 0, 1, \ldots, J \tag{3.84}$$

$$W_{ij}(N-t+2) = \begin{cases} M_{ij}(N-t+2) + A(N-t+2) & i=j=0 \\ M_{ij}(N-t+2) & i,j = 0, \ldots, J \text{ except } i=j=0 \\ 0 & i,j>J \end{cases} \tag{3.85}$$

$$M_{ij}(N-t+1) = [\phi_i'(N-t+2,N-t+1)W_{00}(N-t+2) + W_{i+1,0}(N-t+2)]$$
$$\cdot[\phi_j(N-t+2,N-t+1) + \psi(N-t+2,N-t+1)S_j(N-t+1)]$$
$$+ \phi_i'(N-t+2,N-t+1)W_{0,j+1}(N-t+2) + W_{i+1,j+1}(N-t+2)$$
$$i,j = 0, 1, \ldots, J \tag{3.86}$$

$$V_{t-1} = E\{\sum_{i=0}^{J}\sum_{j=0}^{J} x'(N-t-i+1)M_{ij}(N-t+1)x(N-t-j+1) + \alpha(N-t+1) \tag{3.87}$$

$$\alpha(N-t+1) = \text{trace}[\sum_{i=0}^{J}\sum_{j=0}^{J} \Lambda_{ij}(N-t+1)P(N-t-j+1,N-t-i+1|N-t+1)] + \alpha(N-t+2)$$
$$+ \text{trace}[\Gamma'(N-t+2,N-t+1)W_{00}(N-t+2)\Gamma(N-t+2,N-t+1)Q(N-t+1)] \tag{3.88}$$

$$\Lambda_{ij}(N-t+1) = S_i(N-t+1)[\psi'(N-t+1,N-t+2)W_{00}(N-t+2)\psi(N-t+1,N-t+2)$$
$$+ B(N-t+1)]^{-1}S_j(N-t+1)$$
$$i,j = 0, 1, \ldots, J \tag{3.89}$$

where $M_{ij} = M_{ji}'$ and $\Lambda_{ji} = \Lambda_{ji}'$ and $W_{ij} = W_{ji}'$

$$V_{t-1} = \min_{u(N-t)} \dot{E}\{x'(N-t+1)M_{00}x(N-t+1) + 2\sum_{j=0}^{J-1} x'(N-t+1)M_{0,j+1}x(N-t-j)$$

$$+ \sum_{i=0}^{J-1}\sum_{j=0}^{J-1} x'(N-t-1)M_{i+1,j+1}x(N-t-j)\} + \alpha(N-t+1) \quad (3.91)$$

Since the expectation is over x, w and u, $\dot{E}\{V_{t-1}\} = V_{t-1}$ as expressed in Eq. (3.90). Substitution of Eq. (3.91) into Eq. (3.90) yields

$$V_t = \min_{u(N-t)} \dot{E}\{x'(N-t+1)[A + M_{00}]x(N-t+1) + u'(N-t)Bu(N-t)$$

$$+ 2\sum_{j=0}^{J-1} x'(N-t+1)M_{0,j+1}x(N-t-j)$$

$$+ \sum_{i=0}^{J-1}\sum_{j=0}^{J-1} x'(N-t-i)M_{i+1,j+1}x(N-t-j)\} + \alpha(N-t+1) \quad (3.92)$$

Once again, using the properties of conditional expectation, Eq. (3.92) becomes

$$V_t = \min_{u(N-t)} \dot{E}\{E\, x'(N-t+1)[A+M_{00}]x(N-t+1) + u'(N-t)Bu(N-t)$$

$$+ 2\sum_{j=0}^{J-1} x'(N-t+1)M_{0,j+1}x_j + \sum_{i=0}^{J-1}\sum_{j=0}^{J-1} x_i'M_{i+1,j+1}x_j \Big| z^*(N-t),$$

$$\bar{x}^*(0)\ \} + \alpha(N-t+1)$$

where $x_i = x(N-t-i)$. Expansion of the inner expectation and substitution of Eq. (3.14) and (3.85) in Eq. (3.93) yields

$$W_{ij} = \begin{cases} M_{ij} + A & i = j = 0 \\ M_{ij} & i,j = 0, \ldots, J \text{ (except } i = j = 0) \\ 0 & \text{elsewhere} \end{cases} \quad (3.94)$$

$$V_t = \min_{u(N-t)} E\{ \sum_{i=0}^{J} \sum_{j=0}^{J} x_i'\phi_i'W_{00}\phi_j x_j - 2u'\psi'W_{00}\sum_{i=0}^{J}\phi_i x_i$$

$$+ 2w'\Gamma'W_{00}\sum_{i=0}^{J}\phi_i x_i + 2u'\psi'W_{00}\Gamma w + u'[\psi'W_{00}\psi+B]u$$

$$+ W'\Gamma'W_{00}\Gamma W + 2\sum_{i=0}^{J-1}\sum_{i=0}^{J} x_i'\phi_i'W_{0,j+1}x_j + 2\sum_{j=0}^{J-1} u'\psi'W_{0,j+1}x_j$$

$$+ 2\sum_{j=0}^{J-1} w'\Gamma'W_{0,j+1}x_j \Big| z^*(N-t),\bar{x}^*(0)\} + \alpha(N-t+1) \qquad (3.95)$$

As shown by Eqs. (3.24) and (3.25), the third, fourth, and ninth terms vanish and $\alpha(N-t+1)$ does not depend on $u(N-t)$. The time indices are

$$x_i = x(N-t-i) \qquad \phi_i = \phi_i(N-t+1,N-t)$$

$$u = u(N-t) \qquad \psi = \psi(N-t+1,N-t)$$

$$w = w(N-t) \qquad W_{ij} = W_{ij}(N-t+1)$$

$$B = B(N-t-1)$$

Observe that the first and sixth terms are unaffected by the choice of $u(N-t)$ and minimize Eq. (3.95) with respect to $u(N-t)$.

$$\frac{\partial V_t}{\partial u(N-t)} = 0 = [2\psi'W_{00}\sum_{i=0}^{J}\phi_i x_i + 2\psi'\sum_{i=0}^{J}W_{0,j+1}x_j \Big| z^*,\bar{x}^*(0)]$$

$$+ 2[\psi'W_{00}\psi+B]u \qquad (3.96)$$

By solving for u and restoring the time indices

$$u(N-t) = \sum_{i=0}^{J} S_i(N-t)\hat{x}(N-t-i|N-t) \qquad (3.97)$$

$$S_i(N-t) = -[\psi'(N-t+1,N-t)W_{00}(N-t+1)\psi(N-t+1,N-t) + B(N-t)]^{-1}$$

$$\cdot\ \psi'(N-t+1)[W_{00}(N-t+1)\phi_i(N-t+1,N-t)$$

$$+ W_{0,i+1}(N-t+1)] \qquad (3.98)$$

Now V_t must be evaluated from Eq. (3.91).

$$V_t = \dot{E}\{x'(N-t+1)W_{00}x(N-t+1) + u'(N-t)B(N-t)u(N-t)$$

$$+ 2\sum_{j=0}^{J-1} x'(N-t+1)W_{0,j+1}x(N-t-j)$$

$$+ \sum_{i=0}^{J-1}\sum_{j=0}^{J-1} x'(N-t-i)W_{i+1,j+1}x(N-t-j) + \alpha(N-t+1)\} \quad (3.99)$$

Substitution of the system equation (3.14) into Eq. (3.99) as well as the expression (3.97) for u(N-t) yields

$$V_t = \dot{E}\{\sum_{i=0}^{J}\sum_{j=0}^{J} x_i'\phi_i'W_{00}\phi_j x_j + 2\sum_{i=0}^{J} x_i'S_i'\psi'W_{00}\sum_{j=0}^{J}\phi_j x_j$$

$$+ \sum_{i=0}^{J}\sum_{j=0}^{J} \hat{x}_i'S_i'[\psi'W_{00}\psi+B]^{-1}S_j\hat{x}_j$$

$$+ W'\Gamma'W_{00}\Gamma W$$

$$+ 2\sum_{j=0}^{J-1}\sum_{i=0}^{J} x_i'\phi_i'W_{0,j+1}x_j + 2\sum_{j=0}^{J-1}\sum_{i=0}^{J} \hat{x}_j'S_j'\psi'W_{0,j+1}x_j$$

$$+ \sum_{i=0}^{J-1}\sum_{j=0}^{J-1} x_i'W_{i+1,j+1}x_j\} + \alpha(N-t+1) \quad (3.100)$$

Once again, since $W_{i,j} = 0$ for i or j > J, the upper limit on the sums may be J for each sum without changing the expression (3.100). Therefore, Eq. (3.100) may be rewritten, letting $\hat{x}_i = x_i - \tilde{x}_i$ and noting that $\dot{E}\{\tilde{x}_i x_j'\} = 0$ for all i, j.

$$V_t = E\{\sum_{i=0}^{J}\sum_{j=0}^{J} x_i' \phi_i' W_{00}\phi_j + 2S_i'\psi' W_{00}\phi_j + S_i'[\psi' W_{00}\psi+B]S_j$$

$$+ \phi_i' W_{0,j+1} + S_j'\psi' W_{0,j+1} + W_{i+1,j+1}\, x_j$$

$$+ \sum_{i=0}^{J}\sum_{j=0}^{J} \tilde{x}_i'\, S_i'[\psi' W_{00}\psi+B]^{-1} S_j\, \tilde{x}_j\}$$

$$+ E\{w'\Gamma' W_{00}\Gamma w$$

$$+ \alpha(N-t+1) \tag{3.101}$$

where the time indices are

$$x_i = x(N-t-i) \qquad \phi_i = \phi_i(N-t+1,N-t)$$

$$S_i = S(N-t) \qquad \psi = \psi(N-t+1,N-t)$$

$$W_{ij} = W_{ij}(N-t+1) \qquad \Gamma = \Gamma(N-t+1,N-t)$$

$$w = w(N-t)$$

Define $\Lambda_{ij} \equiv S_i'[\psi' W_{00}\psi+B]^{-1} S_j$ (3.102)

$$M_{ij} \equiv [\phi_i' W_{00} + W_{i+1,0}][\phi_j + \psi S_j] + \phi_i W_{0,j+1} + W_{i-1,j+1} \tag{3.103}$$

$$\alpha(N-t) \equiv \text{trace} \sum_{i=0}^{J}\sum_{j=0}^{J} \Lambda_{ij}\, P_{ij} + \Gamma' W_{00}\Gamma Q] \tag{3.104}$$

$$+ \alpha(N-t+1)$$

then Eq. (3.100) becomes

$$V_t = E\{\sum_{i=0}^{J}\sum_{j=0}^{J} x_i' M_{ij} x_j\} + \alpha(N-t) \tag{3.105}$$

But this is the same result as Eq. (3.86) with the time index changed.

It remains to be demonstrated that, in fact, the u(N-t) expressed by Eqs. (3.94), (3.96) and (3.102) minimizes the performance measure

given by Eq. (3.90). Recall from differential calculus that the vanishing of the gradient with respect to u, which led in the general case to Eq. (3.96) is only a <u>necessary</u> condition for V_t to be a minimum. That is, u(N-t) in Eq. (3.97) only guarantees that V_t attains a stationary value. A sufficient condition that V_t attain a minimum is that the second gradient of V_t with respect to u(N-t) be positive. This condition is determined by examining the gradient of Eq. (3.96).

$$\nabla_{u(N-t)}(V_t) = 2[\psi' W_{00} \sum_{i=0}^{J} \phi_i \hat{x}_i + \psi' \sum_{i=0}^{J} W_{0,j+1} \hat{x}_j + [\psi' W_{00} \psi + B] u] \qquad (3.96)$$

The "second gradient" of Eq. (3.96) becomes

$$\nabla_{u(N-t)}[\nabla_{u(N-t)}(V_t)] = \psi' W_{00} \psi + B$$

Thus a sufficient condition that a minimum be obtained is that the matrix

$$\psi'(N-t-1,N-t) W_{00}(N-t) \psi(N-t-1,N-t) + B(N-t)$$

be positive definite for all t = 1, 2, ... , N.

The control algorithm and associated performance measure equations may now be written, letting k = N - t. These results are summarized in Table 3.3. Block diagrams of the optimal controller and the optimal control system are shown in Figures 3.2 and 3.3 respectively.

The control law expressed by Eq. (3.105) requires the optimal estimate of the delayed states at each stage. The form of the control law indicates the following theorem:

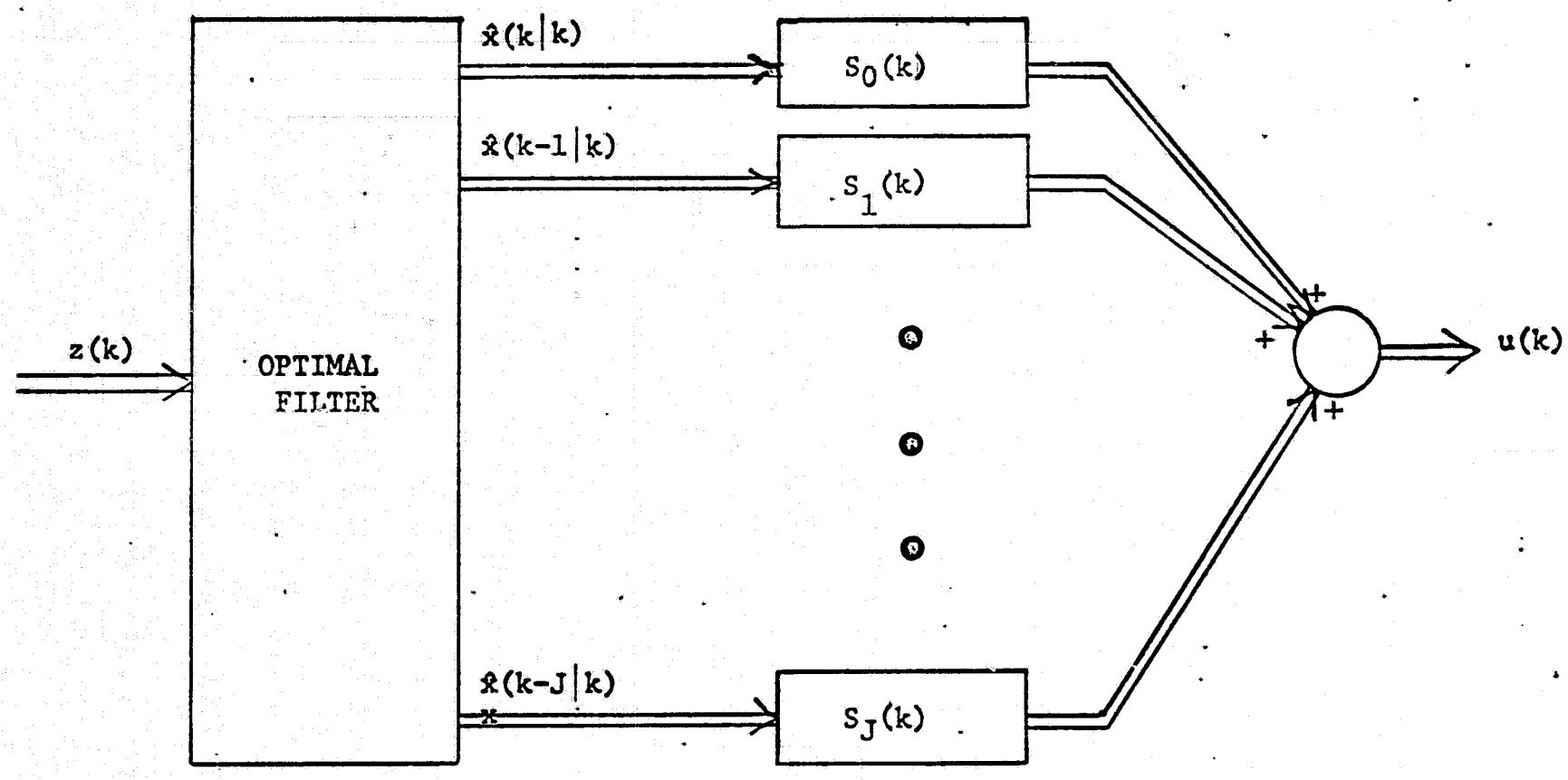

Figure 3.2 Block Diagram of Optimal Controller for Discrete Linear Systems With Time Delay

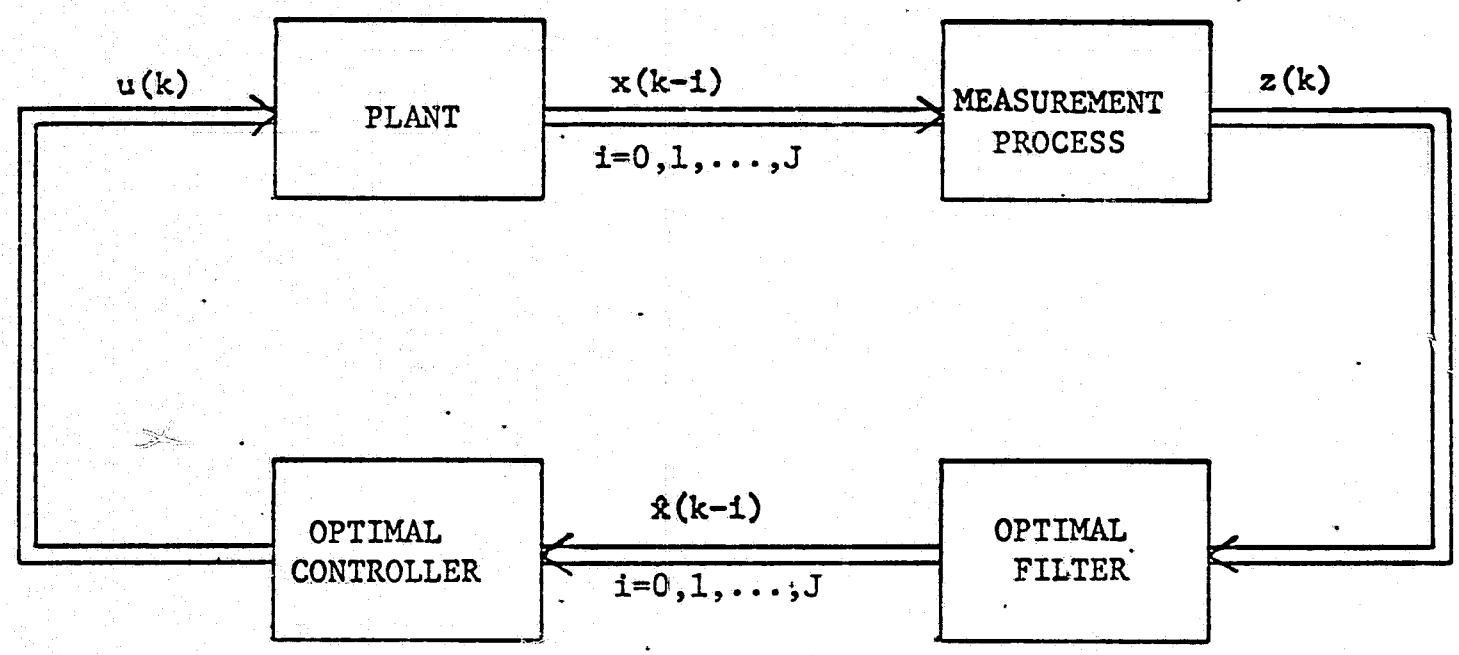

Figure 3.3 Block Diagram of Overall Optimal Control System

Table 3.3

Summary of Optimal Control Algorithm for k-Stage Sequence

$$u(k) = \sum_{i=0}^{J} S_i(k)\hat{x}(k-i|k) \tag{3.106}$$

$$S_i(k) = -[\psi'(k+1,k)W_{00}(k+1)\psi(k+1,k) + B(k)]^{-1} \cdot \psi'(k+1,k)[W_{00}(k+1)\phi_i(k+1,k) + W_{0,i+1}(k+1)]$$

$$i = 0, 1, \ldots, J \tag{3.107}$$

$$W_{ij}(k+1) = \begin{cases} M_{ij}(k+1) + A(k+1) & i=j=0 \\ M_{ij}(k+1) & i,j=0, \ldots, J \text{ except } i=j=0 \\ 0 & i,j>J \end{cases} \tag{3.108}$$

$$M_{ij}(k) = [\phi_i'(k+1,k)W_{00}(k+1) + W_{i+1,0}(k+1)][\phi_j(k+1,k) + \psi(k+1,k)S_j(k)] + \phi_i'(k+1,k)W_{0,j+1}(k+1) + W_{i+1,j+1}(k+1)$$

$$i,j = 0, 1, \ldots, J \tag{3.109}$$

$$V_{N-k} = E\{\sum_{i=0}^{J}\sum_{j=0}^{J} x'(k-i)M_{ij}(k)x(k-i)\} + \alpha(k) \tag{3.110}$$

$$\alpha(k) = \text{trace}\{\sum_{i=0}^{J}\sum_{j=0}^{J} \Lambda_{ij}(k)P(k-j,k-i|k)\} + \alpha(k+1) + \text{trace}\{\Gamma'(k+1,k)W_{00}(k+1)\Gamma(k+1,k)Q(k)\} \tag{3.111}$$

$$\Lambda_{ij}(k) = S_i'(k)[\psi'(k+1,k)W_{00}(k+1)\psi(k+1,k) + B(k)]^{-1}S_j(k)$$

$$i,j = 0, 1, \ldots, J \tag{3.112}$$

for $k = N-1, N-2, \ldots, 0$, where $\alpha(n) = 0$, $W_{00}(N) = A(N)$, and $W_{ij}(N)$ is zero elsewhere. The $r \times r$ matrix $[\psi'(k+1,k)W_{00}(k+1)\psi(k+1,k) + B(k)]$ is required to be positive definite for all k. The minimum value of the performance index for (N-k) stages of control is given by Eq. (3.110).

Theorem 3.2 The optimal control system for the stochastic linear regulator problem consists of the optimal linear filter cascaded with the optimal feedback gain matrix. The parameters for the two parts of the control system are determined independently. The performance measure is governed by Equations (3.109) through (3.112) where the boundary condition is $\alpha(N) = 0$.

The next section verifies that the gain matrix is the same as that for the deterministic controller. This confirms the separation principle as applied to time delay systems.

3.6 Discussion of Results

3.6.1 Comparable Results for Deterministic Case

It is interesting to relate the results expressed in Eqs. (3.106) through (3.112) to the deterministic case where no plant disturbances or measurement errors are present. For such a case the noise covariance matrices, R and Q, are identically zero. The estimates of the states are equal to the states themselves forcing the filtering error covariance matrix to zero and the expected value operation is over a deterministic quantity, yielding the quantity itself. The resulting equations (3.106) through (3.112) are presented in Table 3.4.

Note that the computation of the control law expressed by Eqs. (3.113) through (3.119) once again verifies the separation principle.

Table 3.4

Summary of Optimal Control Algorithm
for Deterministic Time Delay Systems

$$u(k) = \sum_{i=0}^{J} S_i(k)x(k-i) \tag{3.113}$$

$$S_i(k) = -[\psi'(k+1,k)W_{00}(k+1)\psi(k+1,k) + B(k)]^{-1}$$
$$\psi'(k+1,k)[W_{00}(k+1)\phi_i(k+1,k) + W_{0,i+1}(k+1)]$$
$$i = 0, 1, \ldots, J \tag{3.114}$$

$$W_{ij}(k+1) = \begin{cases} M_{ij}(k+1) + A(k+1) & i=j=0 \\ M_{ij}(k+1) & i,j=0, \ldots, J \text{ except } i=j=0 \\ 0 & \text{elsewhere} \end{cases} \tag{3.115}$$

$$M_{ij}(k) = [\phi_i'(k+1,k)W_{00}(k+1) + W_{i+1,0}(k+1)][\phi_i(k+1,k) + \psi(k+1,k)S_j(k)]$$
$$+ \phi_i'(k+1,k)W_{0,j+1}(k+1) + W_{i+1,j+1}(k+1)$$
$$i,j = 0, 1, \ldots, J \tag{3.116}$$

$$V_{N-k} = \sum_{i=0}^{J} \sum_{j=0}^{J} x'(k-i)M_{ij}(k)x(k-i) \tag{3.117}$$

$$\alpha(k) = 0 \tag{3.118}$$

$$\Lambda_{ij}(k) = \text{don't care} \tag{3.119}$$

That is, the control law is identical to that expressed by Eqs. (3.106) through (3.108) except that $\hat{x}(k-i|k)$ is replaced by $x(k-i)$. Thus the controller in the stochastic case treats the optimal estimate of the states as if they were the actual values of the states.

The value of the performance index is not the same, however. It is, as expected, less for the deterministic case than the stochastic case.

3.6.2 Comparable Results for Stochastic No-Delay Case

If no delays are present in the system, the results expressed by Eqs. (3.106) through (3.112) should reduce to the standard optimal control law. The transformation may be made by letting $J = 0$ and writing the resulting equations which are presented in Table 3.5. These results are, in fact, identical to the standard optimal control results such as those obtained by Meditch[5] Chapter 9.

3.7 Computational Aspects of Optimal Controller

The recursive nature of the computations required to generate the optimal control sequence and to evaluate the performance index is evident from Eqs. (3.106) through (3.112).

1. Given $\{W_{ij}(k+1),\ i,j=0,1,\ldots,J\}$ compute $\{S_i(k),\ i=0,1,\ldots,J\}$ from Eq. (3.107).

2. Substitute the values of $\{S_i(k),\ i=0,1,\ldots,J\}$ and $W_{00}(k+1)$ into Eq. (3.112) to obtain $\{\Lambda_{ij}(k),\ i,j=0,1,\ldots,J\}$.

3. Substitute $\{\Lambda_{ij}(k),\ i,j=0,1,\ldots,J\}$, $W_{00}(k+1)$, $\alpha(k+1)$, and the error covariance matrix $\{P(k-j,k-i|k),\ i,j=0,1,\ldots,J\}$ into Eq. (3.111) to obtain $\alpha(k)$.

Table 3.5

Summary of Optimal Control Algorithm for Stochastic Systems With No Time Delay

$$u(k) = S_0(k)\hat{x}(k|k) \tag{3.120}$$

$$S_0(k) = -[\psi'(k+1,k)W_{00}(k+1)\psi(k+1,k) + B(k)]^{-1} \cdot \psi'(k+1,k)W_{00}(k+1)\phi_0(k+1,k) \tag{3.121}$$

$$W_{00}(k+1) = M_{00}(k+1) + A(k+1) \tag{3.122}$$

$$M_{00}(k) = \phi_0(k+1,k)W_{00}(k+1)[\phi_0(k+1,k) + \psi(k+1,k)S_0(k)] \tag{3.123}$$

$$V_{N-k} = E\{x'(k)M_{00}(k)x(k)\} + \alpha(k) \tag{3.124}$$

$$\alpha(k) = \alpha(k+1) + \text{trace}\{\Gamma'(k+1,k)W_{00}(k+1)\Gamma(k+1,k)Q(k)\} + \text{trace}\{\Lambda_{00}(k)P(k|k)\} \tag{3.125}$$

$$\Lambda_{00}(k) = S_0'(k)[\psi'(k+1,k)W_{00}(k+1)\psi(k+1,k) + B(k)]^{-1}S_0(k) = -\phi_0'(k+1,k)W_{00}(k+1)\psi(k+1,k)S_0(k) \tag{3.124}$$

4. $\{S_i(k),\ i=0,1,\ldots,J\}$ and $\{W_{ij}(k+1),\ i,j=0,1,\ldots,J\}$ are substituted into Eq. (3.110) to obtain $\{M_{ij}(k),\ i,j=0,1,\ldots,J\}$.

5. Substitute $\{M_{ij}(k),\ i,j=0,1,\ldots,J\}$ into Eq. (3.110) to obtain V_{N-k}.

6. Substitute $\{M_{ij}(k),\ i,j=0,1,\ldots,J\}$ and $A(k)$ into Eq. (3.108) to determine $\{W_{ij}(k),\ i,j=0,1,\ldots,J\}$.

The cycle is then repeated, letting k become k-1 in the above procedure. Note that although $\{M_{ij}(k),\ i,j=0,1,\ldots,J\}$ must be computed at each stage, V_{N-k} is not necessarily of interest and, therefore, need only be computed at $k = 0$ to obtain the minimum value of the performance measure for all N stages of control. The values of $\alpha(k)$ and $\{\Lambda_{ij}(k),\ i,j=0,1,\ldots,J\}$ must be computed at each stage, however, because of their inter-relationship and the dependence of V_{N-k} on $\alpha(k)$. Note also that the error covariance matrix from the optimal filter must be known at each stage. If only the optimal control is required then steps 2, 3 and 5 may be omitted.

The optimal control is physically realizable since it is simply a linear transformation on the estimates of the delayed states. The controller in Fig. 3.2 is a set of time varying gain matrices $\{S_i(k),\ i=0,1,\ldots,J\}$.

Since the computations proceed backward in time, it is clear that the time history of $\{S_i(k),\ i=0,1,\ldots,J\}$ must be determined prior to system operation. That is, it must be precomputed and stored for later use.

CHAPTER IV

EXPANDED STATE REPRESENTATION AND DUALITY

4.1 Introduction

In this chapter an alternate representation of discrete-time systems with time delay is formulated. The system equations (2.6) and (2.16) are imbedded in an "expanded state" form. This representation, discussed in detail in Section 4.2, expands the state dimension of the system in direct proportion to the magnitude of the time delay. Once the time delay system is expressed in the expanded state form the solutions are well-known [2,5] since this form does not express explicitly the time delay dependence. Unfortunately, since the resulting system dimension is directly proportional to the time delay magnitude, the resulting computation required for a solution is often considered too extensive for practical application. As a consequence the expanded state form does not receive much attention in the literature.

The major results of this chapter are obtained using the expanded state formulation. One consequence of casting the time delay problem in the expanded state form is that the resulting matrices have a large number of null elements. Thus, rather than work with expanded matrices (as previous authors have done), it may be more efficient to partition the matrices. The solutions to these submatrix equations are obtained in Sections 4.3 and 4.4. The results are identical to those of Chapters 2 and 3. In Chapter 5 the computational savings are demonstrated, by

comparing the partitioned results to those obtained by working with the entire matrices.

In Section 4.5 the expanded state form is used to demonstrate the duality of estimation and control for time delay systems. Duality follows as a natural consequence of being able to express a time delay system as an expanded system with no time delays. It is also shown, however, that duality can not be extended to the partitioned solutions to the estimation and control problems.

4.2 Expanded State Representation of Systems with Time Delay

The system equations of Chapters 2 and 3 are

$$x(k+1) = \sum_{i=0}^{J} \phi_i(k+1,k)x(k-i) + \psi(k+1,k)u(k) + \Gamma(k+1,k)w(k) \quad (4.1)$$

$$z(k+1) = H(k+1)x(k+1) + v(k+1) \quad (4.2)$$

These equations may be also written as an expanded state representation

$$\tilde{x}(k+1) = \tilde{\phi}(k+1,k)\tilde{x}(k) + \tilde{x}(k+1,k)\tilde{u}(k) + \tilde{\Gamma}(k+1,k)\tilde{w}(k) \quad (4.3)$$

$$\tilde{z}(k+1) = \tilde{H}(k+1)\tilde{x}(k+1) + \tilde{v}(k+1) \quad (4.4)$$

where the following definitions apply

$$\tilde{x}(k+1) = \begin{bmatrix} x(k+1) \\ x(k) \\ \vdots \\ x(k-J+1) \end{bmatrix} \quad (4.5)$$

$$\tilde{u}(k) = u(k) \quad (4.6)$$

$$\tilde{x}(k+1,k) = \begin{bmatrix} \psi(k+1,k) \\ 0 \\ \cdot \\ \cdot \\ \cdot \\ 0 \end{bmatrix} \tag{4.7}$$

$$\tilde{H}(k+1) = \underbrace{H(k+1) \quad 0 \ \ldots \ 0}_{} \tag{4.8}$$

$$\tilde{\phi}(k+1,k) = \begin{bmatrix} \phi_0(k+1,k) & \phi_1(k+1,k) & \ldots, & \phi_J(k+1,k) \\ I & 0 & \ldots & 0 \\ 0 & I \quad 0 & \ldots & 0 \\ \cdot & 0 \quad I & & \cdot \\ \cdot & \cdot & I \quad 0 & 0 \\ \cdot & \cdot & & \\ 0 & \ldots & 0 \quad I & 0 \end{bmatrix} \tag{4.9}$$

$$\tilde{\Gamma}(k+1,k) = \begin{bmatrix} \Gamma(k+1,k) \\ 0 \\ \cdot \\ \cdot \\ \cdot \\ 0 \end{bmatrix} \tag{4.10}$$

$$\tilde{v}(k+1) = v(k+1) \tag{4.11}$$

$$\tilde{w}(k) = w(k) \tag{4.12}$$

From the previous properties of the smaller matrices

$\tilde{x}$ = n(J+1) vector (state)

$\tilde{u}$ = r vector (control)

$\tilde{w}$ = p vector (disturbance)

$\tilde{z}$ = m(J+1) vector (measurement)

$\tilde{v}$ = m vector (measurement error)

$\tilde{\phi}$ = n(J+1) x n(J+1) state transition matrix

$\tilde{\Gamma}$ = n(J+1) x p disturbance transition matrix

$\tilde{\psi}$ = n(J+1) x r(J+1) control transition matrix

$\tilde{H}$ = m(J+1) x n(J+1) measurement matrix

$\tilde{x}(0)$ = zero mean gaussian random n(J+1) vector with positive semidefinite covariance matrix P(0)

$\{\tilde{w}(k), k=0,1,\ldots\}$ = zero mean gaussian white sequence which is independent of $\tilde{x}(0)$ and has a positive semidefinite p x p covariance matrix Q(k), k=0,1,...

$\{\tilde{v}(k+1), k=0,1,\ldots\}$ = zero mean gaussian white sequence which is independent of $\tilde{x}(0)$ and $\{\tilde{w}(k), k=0,1,\ldots\}$ and has a positive semidefinite m x m covariance matrix R(k+1), k+0,1,...

$\{\tilde{u}(k), k=0,1,\ldots\}$ = control sequence which is either known or can be specified as desired

4.3 Optimal Estimation Solution of Expanded State Representation

With the system described by Eqs. (4.3) and (4.4) having the properties expressed in the preceding section, the solution is well-known (Meditch [5] Chapter 4) for this is the standard estimation problem. Once again, of course, the system must be "observable" as described in Appendix A or the estimation problem cannot be solved. Under the assumption of observability, then, the following theorems from Meditch [5], (pp. 174-177 and p. 356) are stated for a system described by Eqs. (4.3) and (4.4).

Theorem 4.1 If the optimal filtered estimate $\hat{\tilde{x}}(k|k)$ and the covariance matrix $\underline{P}(k|k)$ of the corresponding filtering error $\tilde{\tilde{x}}(k|k) = \tilde{x}(k) - \hat{\tilde{x}}(k|k)$ are known for some $k = 0, 1, \ldots$, then

a. The single-stage optimal predicted estimate for all admissible loss functions is given by the expression

$$\hat{\tilde{x}}(k+1|k) = \tilde{\phi}(k+1,k)\hat{\tilde{x}}(k|k) + \tilde{\psi}(k+1,k)\tilde{v}(k) \tag{4.13}$$

b. The stochastic process $\{\tilde{\tilde{x}}(k+1|k), k = 0, 1, \ldots\}$ defined by the single-stage prediction error $\tilde{\tilde{x}}(k+1|k) = \tilde{x}(k+1) - \hat{\tilde{x}}(k+1|k)$ is a zero mean Gauss-Markov sequence whose covariance matrix is given by the relation

$$\tilde{P}(k+1|k) = \tilde{\phi}(k+1,k)\tilde{P}(k|k)\tilde{\phi}'(k+1,k) + \tilde{\Gamma}(k+1,k)\tilde{Q}(k)\tilde{\Gamma}'(k+1,k) \tag{4.14}$$

Theorem 4.2

a. The optimal filtered estimate $\hat{\tilde{x}}(k+1|k+1)$ is given by the recursive relation

$$\hat{\tilde{x}}(k+1|k+1) = \hat{\tilde{x}}(k+1|k) - \tilde{K}(k+1)[\tilde{z}(k+1) - \tilde{H}(k+1)\hat{\tilde{x}}(k+1|k)] \tag{4.15}$$

for $k = 0, 1, \ldots$, where $\hat{\tilde{x}}(0|0) = 0$

b. $\tilde{K}(k+1)$ is an $n(J+1) \times m$ matrix which is specified by the set of relations

$$\tilde{K}(k+1) = \tilde{P}(k+1|k)\tilde{H}'(k+1)[\tilde{H}(k+1)\tilde{P}(k+1|k)\tilde{H}'(k+1) + \tilde{R}(k+1)]^{-1} \tag{4.16}$$

$$\tilde{P}(k+1|k) = \tilde{\phi}(k+1,k)\tilde{P}(k|k)\tilde{\phi}'(k+1,k) + \tilde{\Gamma}(k+1,k)\tilde{Q}(k)\tilde{\Gamma}'(k+1,k) \tag{4.17}$$

$$\tilde{P}(k+1|k+1) = [I-\tilde{K}(k+1)\tilde{H}(k+1)]\tilde{P}(k+1|k) \tag{4.18}$$

for $k = 0, 1, \ldots$ where I is the $n(J+1) \times n(J+1)$ identity matrix and $\tilde{P}(0|0) = \tilde{P}(0)$ is the initial condition for Eq. (4.17).

c. The stochastic process $\{\tilde{\tilde{x}}(k+1|k+1), k=0,1,\ldots\}$ which is defined by the filtering error relation

$$\tilde{\tilde{x}}(k+1|k+1) = \tilde{x}(k+1) - \hat{\tilde{x}}(k+1|k+1) \tag{4.19}$$

$k = 0, 1, \ldots$, is a zero mean Gauss-Markov sequence whose covariance matrix is given by Eq. (4.18).

For these theorems, the following definitions hold

$$\tilde{P}(k+1|k) \equiv E\{\tilde{\hat{x}}(k+1|k)\tilde{\hat{x}}'(k+1k)\} \tag{4.20}$$

where $P(k+1|k)$ is $n(J+1) \times n(J+1)$

$$\hat{\tilde{x}}(k+1|k) \equiv \begin{bmatrix} \hat{x}(k+1|k) \\ \hat{x}(k|k) \\ \vdots \\ \hat{x}(k-J+1|k) \end{bmatrix} \tag{4.21}$$

where $\hat{x}(k+1|k)$ is $n(J+1) \times 1$

The use of Eq. (4.20) allows $\tilde{P}(k+1|k)$ to be expressed in terms of its submatrices as

$$\tilde{P}(k+1|k) = \begin{bmatrix} P(k+1,k+1|k) & P(k+1,k|k) & \cdots & P(k+1,k-J+1|k) \\ P(k,k+1|k) & P(k,k|k) & & \vdots \\ \vdots & \vdots & & \vdots \\ P(k-J+1,k+1|k) & P(k-J+1,k|k) & \cdots & P(k-J+1,k-J+1|k) \end{bmatrix} \tag{4.22}$$

Similarly,

$$\tilde{P}(k|k) = \begin{bmatrix} P(k,k|k) & P(k,k-1|k) & \cdots & P(k,k-J|k) \\ P(k-1,k|k) & P(k-1,k-1|k) & & \vdots \\ \vdots & & & \vdots \\ P(k-J,k|k) & \cdots & \cdots & P(k-J,k-J|k) \end{bmatrix} \tag{4.23}$$

4.3.1 Partitioned Representation of the Expanded State Solution to the Estimation Problem

The solution to the optimal estimation problem for systems with time delay is expressed by Eqs. (4.13) through (4.18). As mentioned earlier, however, the dimensions of the matrices involved in this expanded

state solution may render the computation prohibitive. The appearance of a large number of null elements in the defining equations for these matrices [Eqs. (4.5) - (4.12), (4.22), (4.23)] indicate that partitioned solutions may be advantageous. This is, in fact, the case as Eqs. (4.13) through (4.18) are examined below in partitioned form.

Eq. (4.13) may be expressed in partitioned form as

$$\begin{bmatrix} \hat{x}(k+1|k) \\ \hat{x}(k|k) \\ \vdots \\ \hat{x}(k+1-J|k) \end{bmatrix} = \begin{bmatrix} \phi_0 & \phi_1 & \cdots & \phi_J \\ I & 0 & \cdots & 0 \\ 0 & I & \ddots & \vdots \\ 0 & \cdots & 0 & I \quad 0 \end{bmatrix} \begin{bmatrix} \hat{x}(k|k) \\ \hat{x}(k-1|k) \\ \vdots \\ \hat{x}(k-J|k) \end{bmatrix} \begin{bmatrix} \psi \\ 0 \\ \vdots \\ 0 \end{bmatrix} u(k) \tag{4.24}$$

The expansion of Eq. (4.24) in partitioned form yields

$$\hat{x}(k+1|k) = \sum_{i=0}^{J} \phi_i(k+1,k)\hat{x}(k-i|k) + \psi(k+1,k)u(k) \tag{4.25}$$

which is identical to Eq. (2.66) obtained in Chapter 2.

Eq. (4.15) may be expressed in partitioned form as

$$\begin{bmatrix} \hat{x}(k+1|k+1) \\ \hat{x}(k|k+1) \\ \vdots \\ \hat{x}(k+1-J|k+1) \end{bmatrix} = \begin{bmatrix} \hat{x}(k+1|k) \\ \hat{x}(k|k) \\ \vdots \\ \hat{x}(k+1-J|k) \end{bmatrix} - \begin{bmatrix} K_0 \\ K_1 \\ \vdots \\ K_J \end{bmatrix} [z] - \underline{H0 \ \ldots \ 0} \begin{bmatrix} \hat{x}(k+1|k) \\ \hat{x}(k|k) \\ \vdots \\ \hat{x}(k+1-J|k) \end{bmatrix}$$

$$= \begin{bmatrix} \hat{x}(k+1|k) - K_0(k+1)[z(k+1) - H(k+1)\hat{x}(k+1|k)] \\ \vdots \\ \hat{x}(k+1-J|k) - K_J(k+1)[z(k+1) - H(k+1)\hat{x}(k+1-|k)] \end{bmatrix} \tag{4.26}$$

The partitioned result of Eq. (4.26) may be expressed as

$$\hat{x}(k+1-i|k+1) = \hat{x}(k+1-i|k) - K_i(k+1)[z(k+1) - H(k+1)\hat{x}(k+1|k)] \tag{4.27}$$

which is identical to Eq. (3.90) obtained in Chapter 2.

Eq. (4.16) may be expressed in partitioned form

$$\begin{bmatrix} K_0(k+1) \\ K_1(k+1) \\ \vdots \\ K_J(k+1) \end{bmatrix} = \begin{bmatrix} P^1_{00} & \cdots & P^1_{0J} \\ \vdots & & \vdots \\ P^1_{J0} & \cdots & P_{JJ} \end{bmatrix} \begin{bmatrix} 0 \\ \vdots \\ 0 \end{bmatrix} \left[\begin{bmatrix} \underline{H \; 0 \; \cdots \; 0} \end{bmatrix} \begin{bmatrix} P^1_{00} & \cdots & P_{0J} \\ \vdots & & \vdots \\ P^1_{J0} & \cdots & P^1_{JJ} \end{bmatrix} \begin{bmatrix} H' \\ 0 \\ \vdots \\ 0 \end{bmatrix} + R \right]^{-1}$$

$$= \begin{bmatrix} P^1_{00}H' \\ P^1_{10}H' \\ \vdots \\ P^1_{J0}H' \end{bmatrix} [HP^1_{00}H' + R]^{-1} \tag{4.28}$$

where $P^1_{ij} = E\{\tilde{x}(k+1-i|k)\tilde{x}'(k+1-j|k)\} = P\{k+1-i,k+1-j|k\}$

$H = H(k+1)$

$R = R(k+1)$

Restoring the time indices to Eq. (4.28) the partitioned gains become

$$K_i(k+1) = P(k+1-i,k+1|k)H'(k+1)[H(k+1)P(k+1,k+1|k)H'(k+1) + R(k+1)]^{-1} \tag{4.29}$$

which is identical to Eq. (2.100) obtained in Chapter 2.

To ease notation below, the following time indices are used

$P^3_{i,j} = P(k+1-i,k+1-j|k)$

$P^1_{i,j} = P(k-i,k-j|k)$

Examination of the partitioned form of Eq. (4.29) yields

$$\begin{bmatrix} P^3_{00} & P^3_{01} & \cdots & P^3_{0J} \\ P^3_{10} & & & \vdots \\ \vdots & & & \vdots \\ P^3_{J0} & \cdots & & P^3_{JJ} \end{bmatrix} = \begin{bmatrix} \phi_0 & \phi_1 & & \phi_J \\ I & 0 & \cdots & 0 \\ 0 & & & \vdots \\ \vdots & & & \vdots \\ 0 & \cdots & 0 \; I & 0 \end{bmatrix} \begin{bmatrix} P^1_{00} & \cdots & P^1_{0J} \\ \vdots & & \\ P^1_{J0} & & P^1_{JJ} \end{bmatrix} \begin{bmatrix} \phi'_0 & I & 0 & \cdots & 0 \\ \phi'_1 & 0 & I & & \vdots \\ \vdots & & & & 0 \\ \phi'_J & 0 & \cdots & & 0 \end{bmatrix}$$

$$+ \begin{bmatrix} \Gamma \\ 0 \\ \vdots \\ 0 \end{bmatrix} \underline{Q \, \Gamma' \; 0 \; \cdots \; 0}$$

$$= \begin{bmatrix} \sum_{i=0}^{J} \sum_{j=0}^{J} \phi_i P^1_{ij} \phi'_j & \sum_{i=0}^{J} \phi_i P^1_{i,0} & \cdots & \sum_{i=0}^{J} \phi_i P^1_{i,J-1} \\ \sum_{i=0}^{J} P^1_{0,i} \phi'_i & P^1_{1,1} & \cdots & P^1_{1,J-1} \\ \vdots & \vdots & & \vdots \\ \sum_{i=0}^{J} P^1_{J-1,i} \phi'_i & P^1_{J-1,1} & \cdots & P^1_{J-1,J-1} \end{bmatrix} + \begin{bmatrix} \Gamma Q \Gamma' & 0 & \cdots & 0 \\ 0 & 0 & & \vdots \\ \vdots & & & \vdots \\ 0 & \cdots & & 0 \end{bmatrix} \tag{4.30}$$

Restoring the time indices, the following submatrix relationships result from Eq. (4.30)

$$P(k+1,k+1|k) = \sum_{i=0}^{J} \sum_{j=0}^{J} \phi_i(k+1,k) P(k,k|k) \phi'_j(k+1,k) + \Gamma(k+1,k) Q(k) \Gamma'(k+1,k) \tag{4.31}$$

$$P(k-j,k+1|k) = \sum_{i=0}^{J} P(k-j,k-i|k) \phi'_i(k+1,k) \quad j=0,1,\ldots,J-1 \tag{4.32}$$

$$P(k+1,k-j|k) = P'(k-j,k+1|k) \tag{4.33}$$

Expressions (4.31) and (4.32) correspond to (2.108) and (2.110) respectively.

Equation (4.18) is now examined in terms of its submatrices, dropping the time indices

$$\begin{bmatrix} P^1_{0,0} & \cdots & P^1_{0,J} \\ \vdots & & \vdots \\ P^1_{J,0} & \cdots & P^1_{J,J} \end{bmatrix} = \begin{bmatrix} I & 0 & \cdots & 0 \\ 0 & I & & \vdots \\ \vdots & & \ddots & \\ 0 & \cdots & 0 & I \end{bmatrix} - \begin{bmatrix} K_0 \\ K_1 \\ \vdots \\ K_J \end{bmatrix} \begin{matrix} H & 0 & \cdots & 0 \end{matrix} \begin{bmatrix} P^3_{00} & \cdots & P^3_{JJ} \\ \vdots & & \vdots \\ P_{J,0} & \cdots & P_{J,J} \end{bmatrix}$$

$$= \left[\begin{array}{c|cccc} I - K_0H & 0 & \cdots & & 0 \\ \hline -K_1H & I & 0 & \cdots & 0 \\ -K_2H & 0 & I & & \vdots \\ \vdots & \vdots & & & 0 \\ -K_JH & 0 & 0 & 0 & I \end{array}\right] \begin{bmatrix} P^3_{00} & P^3_{01} & \cdots & P^3_{0J} \\ P^3_{10} & & & \vdots \\ \vdots & & & \vdots \\ P^3_{J0} & \cdots & & P^3_{JJ} \end{bmatrix}$$

$$= \left[\begin{array}{c|c|c|c} [I - K_0H]P^3_{00} & [I - K_0H]P^3_{01} & \cdots & [I - K_0H]P^3_{0J} \\ \hline P^3_{10} - K_1HP^3_{00} & P^3_{11} - K_1HP^3_{01} & \cdots & P^3_{1J} - K_1HP^3_{0J} \\ \hline \vdots & & & \\ \hline P^3_{J0} - K_JHP^3_{00} & P^3_{J1} - K_JHP^3_{01} & \cdots & P^3_{JJ} - K_JHP^3_{0J} \end{array}\right] \tag{4.34}$$

Restoring the time indices to Eq. (4.26) the submatrices of $P(k|k)$ may be expressed as

$$P(k-i+1,k-j+1|k+1) = P(k+1-i,k+1-j|k) - K_i(k+1)H(k+1)P(k+1,k+1-j|k) \tag{4.35}$$

which is identical to the result [Eq. (2.111)] obtained earlier using properties of conditional expectation.

In summary, then, the results of Chapter 2 expressed by Eqs. (2.86), (2.61), (2.108), (2.109), (2.110), and (2.111) have been obtained in this section as shown by expressions (4.25), (4.27), (4.29), (4.31), (4.32) and (4.35) respectively.

4.4 Submatrix Representation of Expanded State Solution to Optimal Control Problem

The optimal control solution is well-known (Meditch [5], Chapter 9) for the system described by Eqs. (4.3) - (4.12), for this is the formulation of the standard discrete-time optimal control problem. Once again, of course, the system must be "controllable" as described in Appendix A or the control problem cannot be solved. The familiar optimal control solution is stated below in Theorem 4.3. This is followed by examining the submatrices of the solution equations. These submatrix results are identical to the optimal control solution obtained in Chapter 3.

If the system is controllable the following results from Meditch, p. 356, can be stated. Recall that the stochastic linear regulator problem is that of minimizing the Performance Index expressed as

$$P.I. = \sum_{i=1}^{N} [\tilde{x}'(i)\tilde{A}(i)x(i) + \tilde{u}'(i-1)\tilde{B}(i-1)\tilde{u}(i-1)] \tag{4.36}$$

where $\tilde{x}$ and $\tilde{u}$ are defined by Eqs. (4.5), (4.6) and

$$\tilde{A}(k) = \begin{bmatrix} A(k) & 0 & \cdots & 0 \\ 0 & \ddots & & \vdots \\ \vdots & & \ddots & \vdots \\ 0 & & \cdots & 0 \end{bmatrix}_{n(J+1) \times n(J+1)} \tag{4.37}$$

$$\tilde{B}(k) = B(k)_{r \times r} \tag{4.38}$$

Theorem 4.3. For a system described by Eqs. (4.3) and (4.4) the optimal control system for the stochastic linear regulator consists of the optimal linear filter cascaded with the optimal feedback gain matrix of the deterministic linear regulator. The parameters for the two parts of the control system are determined separately. The performance measure for the complete control system is governed by

$$V_{N-k} = E\{\tilde{x}'(k)M(k)\tilde{x}(k)\} + \alpha(k) \qquad \text{and} \tag{4.39}$$

$$\alpha(k) = \alpha(k+1) + tr[\tilde{\Gamma}'(k+1,k)\tilde{W}(k+1)\tilde{\Gamma}(k+1,k)\tilde{Q}(k)]$$
$$- tr[\tilde{\phi}(k+1,k)\tilde{W}(k+1)\tilde{\psi}(k+1,k)\tilde{S}(k)\tilde{P}(k|k)] \tag{4.40}$$

where the boundary condition is $\alpha(N) = 0$

Theorem 4.4 The optimal control law for the stochastic linear regulator problem is the linear feedback control law

$$\tilde{u}(k) = \tilde{S}(k)\hat{\tilde{x}}(k|k) \tag{4.41}$$

where the r x n(J+1) feedback control matrix $\tilde{S}(k)$ is determined recursively from the set of relations

$$\tilde{W}(k+1) = \tilde{M}(k+1) + \tilde{A}(k+1) \tag{4.42}$$

$$\tilde{S}(k) = -[\tilde{\psi}'(k+1,k)\tilde{W}(k+1)\tilde{\psi}(k+1,k) + \tilde{B}(k+1)]^{-1}$$
$$\cdot\tilde{\psi}'(k+1,k)\tilde{W}(k+1)\tilde{\phi}(k+1,k) \tag{4.43}$$

$$\tilde{M}(k) = \tilde{\phi}'(k+1,k)\tilde{W}(k+1)\tilde{\phi}(k+1,k) + \tilde{\phi}'(k+1,k)\tilde{W}(k+1)\tilde{\psi}(k+1,k)\tilde{S}(k) \tag{4.44}$$

The procedure is now to express Eqs. (4.39) through (4.44) in terms of their submatrices to obtain the results of Chapter 3. First the following definitions are made to enable a relationship to be established between the results of Chapter 3 and those obtained below. In the performance measure, Eq. (4.39), $M_{ij}(k)$ is associated with the state vector x(k-i) and x(k-j) of the form

$$x'(k-i)M_{ij}(k)x(k-j) \tag{4.45}$$

so that the following definition holds

$$M(k) \quad \begin{bmatrix} M_{00}(k) & \cdots & M_{0J}(k) \\ \vdots & & \vdots \\ M_{J0}(k) & \cdots & M_{JJ}(k) \end{bmatrix} \tag{4.46}$$

Similarly, in Eq. (4.40), w(k+1) may be expressed in partitioned form as

$$\tilde{W}(k+1) \equiv \begin{bmatrix} W_{00}(k+1) & \cdots & W_{0J}(k+1) \\ \vdots & & \vdots \\ W_{J0}(k+1) & \cdots & W_{JJ}(k+1) \end{bmatrix} \tag{4.47}$$

where W(k+1) is n(J+1) x n(J+1) and $W_{ij}(k+1)$ is n x n.

Finally, the feedback control gains in Eq. (4.41) may be expressed in partitioned form as

$$\tilde{S}(k) \equiv \underbrace{S_0(k) \mid S_1(k) \mid \cdots \mid S_J(k)} \tag{4.48}$$

where $\tilde{S}(k)$ is r x n(J+1) and $S_i(k)$ is r x n. From Eq. (4.41) it can be seen that $S_i(k)$ is the gain multiplying the estimated state vector $\hat{x}(k-i|k)$. Equation (4.41) may now be expressed in partitioned form as

$$u(k) = \underbrace{S_0(k) \mid \cdots \mid S_J(k)} \begin{bmatrix} x(k) \\ x(k-1) \\ \vdots \\ x(k-J) \end{bmatrix}$$

$$= \sum_{i=0}^{J} S_i(k)x(k-i) \tag{4.49}$$

This is identical to the result expressed by Eq. (3.106).

Eq. (4.42) may be expressed in partitioned form, using definitions (4.46), (4.47) and (4.37).

$$\begin{bmatrix} W_{00}(k+1) & \cdots & W_{0J}(k+1) \\ \vdots & & \vdots \\ W_{J0}(k+1) & \cdots & W_{JJ}(k+1) \end{bmatrix} = \begin{bmatrix} M_{00}(k+1) & \cdots & M_{0J}(k+1) \\ \vdots & & \vdots \\ M_{J0}(k+1) & \cdots & M_{JJ}(k+1) \end{bmatrix} + \begin{bmatrix} A(k+1) & 0 & \cdots & 0 \\ 0 & & & \vdots \\ \vdots & & & \vdots \\ 0 & \cdots & \cdots & 0 \end{bmatrix}$$

The partitioned equivalent of this equation is

$$W_{ij}(k+1) = \begin{cases} M_{ij}(k+1) + A(k+1) & i=j=0 \\ M_{ij}(k+1) & i,j=0,1,\ldots,J \text{ except } i=j=0 \\ 0 & i,j>J \end{cases} \tag{4.50}$$

which is identical to the result expressed by Eq. (3.108).

To examine Eq. (4.43) first express the inverse of Eq. (4.43) in partitioned form by dropping the time indices.

$$[\tilde{\psi}'\tilde{W}\tilde{\psi}+\tilde{B}]^{-1} = \left[\underline{\psi' \; 0 \; \cdots \; 0} \begin{bmatrix} W_{00} & \cdots & W_{0J} \\ \vdots & & \vdots \\ W_{J0} & \cdots & W_{JJ} \end{bmatrix} \begin{matrix} \psi \\ 0 \\ \vdots \\ 0 \end{matrix} + B \right]^{-1}$$

$$= [\psi' W_{00}\psi + B]^{-1} \tag{4.51}$$

Therefore Eq. (4.43) may be written

$$\underline{S_0 \; \cdots \; S_J} = [\psi' W_{00}\psi + B]^{-1} \underline{\psi' \; 0 \; \cdots \; 0} \begin{bmatrix} W_{00} & \cdots & W_{0J} \\ \vdots & & \vdots \\ W_{J0} & \cdots & W_{JJ} \end{bmatrix} \begin{bmatrix} \phi_0 & \phi_1 & \cdots & \phi_J \\ I & 0 & \cdots & 0 \\ 0 & I & & \vdots \\ 0 & \cdots & 0 \; I & 0 \end{bmatrix}$$

$$= [\psi' W_{00}\psi + B]^{-1} \psi' \underline{W_{00}\phi_0 + W_{01} \mid \cdots \mid W_{00}\phi_{J-1} + W_{0J} \mid W_{00}\phi_J} \tag{4.52}$$

When the time indices are restored to Eq. (4.52) the following results are obtained.

$$S_i(k) = [\psi'(k+1,k)W_{00}(k+1)\psi(k+1,k) + B(k+1)]^{-1}$$
$$\cdot\psi'(k+1,k)[W_{00}(k+1)\phi_i(k+1,k) + W_{0,i+1}(k+1)] \qquad (4.53)$$

Recall that $W_{0,J+1} = 0$ from Eq. (4.50). Thus Eq. (4.53) is identical to Eq. (3.107). Eq. (4.44) may be expressed in partitioned form as

$$\begin{bmatrix} M_{00} & \cdots & M_{0J} \\ \vdots & & \vdots \\ M_{J0} & \cdots & M_{JJ} \end{bmatrix} = \begin{bmatrix} \phi_0' & I & 0 & \cdots & 0 \\ \phi_1' & 0 & \cdot & & 0 \\ \vdots & \vdots & & \ddots & I \\ \phi_J' & 0 & \cdots & & 0 \end{bmatrix} \begin{bmatrix} W_{00} & \cdots & W_{0J} \\ \vdots & & \vdots \\ W_{J0} & \cdots & W_{JJ} \end{bmatrix}$$

$$\left[\begin{bmatrix} \phi_0 & \cdots & \phi_J \\ I & 0 \cdots & 0 \\ 0 & & \vdots \\ \vdots & & \vdots \\ 0 & \cdots 0\ I & 0 \end{bmatrix} + \begin{bmatrix} \psi \\ 0 \\ \vdots \\ \vdots \end{bmatrix} \underbrace{S_0 \cdots S_J} \right]$$

$$= \begin{bmatrix} \phi_0'W_{00}+W_{10} & \phi_0'W_{01}+W_{11} & \cdots & \phi_0'W_{0,J}+W_{1,J} \\ \phi_1'W_{00}+W_{20} & & & \vdots \\ \vdots & & & \vdots \\ \phi_{J-1}'W_{00}+W_{J0} & & & \phi_{J-1}'W_{0J}+W_{JJ} \\ \phi_J'W_{00} & & \cdots & \phi_J'W_1 \end{bmatrix} \begin{bmatrix} \phi_0+\psi S_0 & \cdots & \phi_J+\psi S_J \\ I\ 0 & \cdots & 0 \\ 0 & & \vdots \\ \vdots & & \vdots \\ 0 & \cdots\ 0\ I & 0 \end{bmatrix}$$

(4.54)

When Eq. (4.54) is completely expanded and the time indices restored, the partitioned result for $M_{ij}(k+1)$ becomes

$$M_{ij}(k+1) = [\phi_i'(k+1,k)W_{00}(k+1) + W_{i+1,0}(k+1)][\phi_j(k+1,k)$$
$$+ \psi(k+1,k)S_j(k)] + \phi_i'(k+1,k)W_{0,j+1}(k+1)$$
$$+ W_{i+1,j+1}(k+1) \qquad (4.55)$$

which is identical to the result of Eq. (3.109). It should be noted, of course, that $W_{ij} = 0$ if i or $j > J$.

Next expand Eq. (4.39) in partitional form using the following definition

$$x_i \equiv x(k-i)$$

$$V_{N-k} = E\{\underbrace{x_0' \; . \; . \; . \; x_i'}\begin{bmatrix} M_{00} & . \; . \; . & M_{0J} \\ \vdots & & \vdots \\ M_{J0} & . \; . \; . & M_{JJ} \end{bmatrix}\begin{bmatrix} x_0 \\ \vdots \\ x_J \end{bmatrix}\} + \alpha(k)$$

$$= E\{\sum_{i=0}^{J}\sum_{j=0}^{J} x_i' M_{ij} x_k\} + \alpha(k) \tag{4.56}$$

When the time indices are restored to Eq. (4.56) it becomes

$$V_{N-k} = E\{\sum_{i=0}^{J}\sum_{j=0}^{J} x'(k-i)M_{ij}(k)x(k-j)\} + \alpha(k) \tag{4.57}$$

which is identical to the result obtained in Eq. (3.110) assuming $\alpha(k)$ is the same.

Finally, examine $\alpha(k)$ of Eq. (4.40) dropping time indices

$$\alpha(k) = tr(\tilde{\Gamma}'\tilde{W}\tilde{\Gamma}\tilde{Q}) - tr(\tilde{\phi}'\tilde{W}\tilde{\psi}\tilde{S}\tilde{P}) + \alpha(k+1) \tag{4.58}$$

Examine the first term of Eq. (4.58) in partitioned form

$$\underbrace{\Gamma' \; 0 \; . \; . \; . \; 0}\begin{bmatrix} W_{00} & . \; . \; . & W_{0J} \\ \vdots & & \vdots \\ W_{J0} & . \; . \; . & W_{JJ} \end{bmatrix}\begin{bmatrix} \Gamma \\ 0 \\ \vdots \\ 0 \end{bmatrix}\begin{bmatrix} Q \end{bmatrix} = \Gamma' W_{00} \Gamma Q \tag{4.59}$$

Examine the second term of Eq. (4.58) in partitioned form

$$\begin{bmatrix} \phi_0' & I & 0 & \cdots & 0 \\ \phi_1' & 0 & I & & \vdots \\ \vdots & \vdots & & & 0 \\ \vdots & \vdots & & & I \\ \phi_J' & 0 & \cdots & & 0 \end{bmatrix} \begin{bmatrix} W_{00} & \cdots & W_{0J} & \psi \\ \vdots & & \vdots & 0 \\ \vdots & & \vdots & \vdots \\ W_{J0} & \cdots & W_{JJ} & 0 \end{bmatrix} \underbrace{S_0 \cdots S_J} \begin{bmatrix} P_{00} & \cdots & P_{0J} \\ \vdots & & \vdots \\ P_{J0} & \cdots & P_{JJ} \end{bmatrix}$$

$$= \begin{bmatrix} \phi_0' & I & 0 & \cdots & 0 \\ \phi_1' & 0 & I & & \vdots \\ \vdots & \vdots & & & 0 \\ \vdots & \vdots & & & I \\ \phi_J' & 0 & \cdots & & 0 \end{bmatrix} \begin{matrix} W_{00}\psi \\ \vdots \\ \vdots \\ \vdots \\ W_{J0}\psi \end{matrix} \underbrace{\sum_{j=0}^{J} S_j P_{j0} \cdots \sum_{j=0}^{J} S_j P_{jJ}}$$

$$= \begin{bmatrix} [\phi_0' W_{00} + W_{10}]\psi \\ [\phi_1' W_{00} + W_{20}]\psi \\ \vdots \\ [\phi_J' W_{00} + W_{J0}]\psi \\ \phi_J W_{00} \end{bmatrix} \underbrace{\sum_{j=0}^{J} S_j P_{j0} \cdots \sum_{j=0}^{J} S_j P_{jJ}} \tag{4.60}$$

Let ξ_{ij} denote the ij<u>th</u> n x n submatrix of Eq. (4.60).

$$\xi_{ij} = [\phi_i' W_{00} + W_{i+1,0}]\psi \sum_{\ell=0}^{J} S_\ell P_{\ell j} \tag{4.61}$$

The trace of the total matrix involves only ξ_{ii} and

$$\text{trace} \sum_{i=0}^{J} \xi_{ii} = \text{trace}\{ \sum_{i=0}^{J} \sum_{j=0}^{J} [\phi_i' W_{00} + W_{i+1,0}]\psi S_j P_{ji}\} \tag{4.62}$$

By substituting Eqs. (4.59) and (4.62) into Eq. (4.58) and restoring the time indices, Eq. (4.58) becomes

$$\alpha(k) = \alpha(k+1) + \mathrm{tr}\{\Gamma'(k+1,k)w(k+1)\Gamma(k+1,k)Q(k)\}$$
$$- \mathrm{tr}\{\sum_{i=0}^{J}\sum_{j=0}^{J}[\phi_i'(k+1,k)W_{00}(k+1) + W_{i+1,0}(k+1)]$$
$$\cdot\ \psi(k+1,k)S_j(k)P(k-j,k-i|k)\} \tag{4.63}$$

which is identical to Eq. (3.111).

In summary, then, the solution to the optimal control problem is determined in this section using an alternate system representation, namely, an expanded state representation. The partitioned results are identical to those obtained using dynamic programming in Chapter 3 and the correspondence is:

This section	Chapter 3
Eq. (4.49)	Eq. (3.106)
Eq. (4.50)	Eq. (3.108)
Eq. (4.53)	Eq. (3.107)
Eq. (4.55)	Eq. (3.109)
Eq. (4.57)	Eq. (3.110)
Eq. (4.63)	Eq. (3.111)

4.5 Duality of Estimation and Control in Systems with Time Delay

For discrete-time linear systems with no time delay, Kalman observed that a "dual" relationship exists between the solution to the optimal estimation problem and the solution to the optimal control problem. His results are presented in the paragraphs below. Section 4.2 demonstrates that time delay systems may be expressed equivalently in an expanded state form. Kalman's results apply directly to time delay

systems in this form and the optimal estimation and control solutions to such systems are duals.

Kalman's notation is retained for this discussion since the variables in the notation of this paper are not duals, whereas those of Kalman are. The relationship between Kalman's notation and that of this paper is also presented for reference.

Since the partitioned solutions to the estimation and control problems yielded significant results, the question arises as to the duality of these partitioned solutions. It is demonstrated that the principle of duality <u>does not extend</u> to the partitioned solutions of the optimal estimation and control problems.

4.5.1 Kalman's Dual Transformation

Consider the estimation and control problems presented below

<u>Optimal Estimation Problem</u>. Consider the dynamic system described by Eq. (4.64) and (4.65)

$$\tilde{x}(k+1) = \tilde{\phi}(k+1,k)\tilde{x}(k) + \tilde{\psi}(k+1,k)\tilde{u}(k) + \tilde{\Gamma}(k+1,k)\tilde{w}(k) \qquad (4.64)$$

$$\tilde{z}(k+1) = \tilde{H}(k+1)\tilde{x}(k+1) + \tilde{v}(k+1) \qquad (4.65)$$

where these equations have all the properties described in Section 4.2. Given the observed values $\tilde{z}(0),\tilde{z}(1),\ldots,\tilde{z}(N-1)$ find an estimate $\hat{\tilde{x}}(k+1|k+1)$ which minimizes the expected loss

$$J_N = E\{\sum_{k=0}^{N-1} [\tilde{x}(k+1) - \hat{\tilde{x}}(k+1|k+1)][\tilde{x}(k+1) - \hat{\tilde{x}}(k+1|k+1)]'\} \qquad (4.66)$$

<u>Optimal Control Problem</u>. Consider the dynamic system described by Eqs. (4.64) and (4.65) where these equations have all the properties described

in Section 4.2. Given any state $\tilde{x}(k)$, determine a sequence $\{\tilde{u}(k),\tilde{u}(k+1),\ldots,\tilde{u}(k+T-1)\}$ of control vectors which minimizes the performance index

$$V[\tilde{x}(k),\tilde{u}(k)] = E\{\sum_{i=k}^{k+T} [\tilde{x}'(i)\tilde{A}(i)\tilde{x}(i) + \tilde{u}'(i-1)\tilde{B}(i-1)\tilde{u}(i-1)]\} \tag{4.67}$$

The recursive relations which express the solutions to these problems are expressed by Kalman as:

<u>Estimation Problem</u>

$$\Delta^*(t) = \phi(t+1,t)P^*(t)M'(t)[M(t)P^*(t)M'(t) + R(t)]^{-1} \tag{4.68}$$

$$\phi^*(t+1,t) = \phi(t+1,t) - \Delta^*(t)M(t) \qquad t \geq t_0 \tag{4.69}$$

$$P^*(t+1) = \phi^*(t+1,t)P^*(t)\phi'(t+1,t) + Q(t) \tag{4.70}$$

<u>Control Problem</u>

$$\hat{\Delta}^*(t) = [\hat{M}'(t)\hat{P}^*(t)\hat{M}(t) + \hat{R}(t)]^{-1}\hat{M}'(t)\hat{P}^*(t)\hat{\phi}(t+1,t) \tag{4.71}$$

$$\hat{\phi}(t+1,t) = \hat{\phi}(t+1,t) - \hat{M}\hat{\Delta}^*(t) \qquad t \leq T \tag{4.72}$$

$$\hat{P}^*(t-1) = \hat{\phi}'(t+1,t)\hat{P}^*(t)\hat{\phi}^*(t+1,t) + \hat{Q}(t) \tag{4.73}$$

where the correspondence between Kalman's notation and that of this paper is given in Table 4.1.

The principle of duality states that if the form of the solution to the optimal estimation problem is known then the form of the solution to the optimal control problem may be obtained by a simple transformation on the solution to the optimal estimation problem. The converse is also true. Kalman's Duality Theorem may now be stated.

Table 4.1

Correspondence between Kalman Notation and Allgaier Notation

	Kalman	Allgaier
Estimation		
	$\Delta^*(t)$	$\tilde{\phi}(k+1,k)\tilde{K}(k+1)$
	$\phi^*(t+1,t)$	$\tilde{\phi}(k+1,k)\tilde{P}(k+1\|k+1)P^{-1}(k+1\|k)$
	$P^*(t+1)$	$\tilde{P}(k+1\|k)$
	$M(t)$	$\tilde{H}(k)$
	$R(t)$	$\tilde{R}(k)$
	$Q(t)$	$\tilde{\Gamma}'(k+1,k)\tilde{Q}(k)\tilde{\Gamma}(k+1,k)$
Control		
	$\hat{\Delta}^*(t)$	$-\tilde{S}(k)$
	$\hat{\phi}^*(t+1,t)$	$\tilde{\phi}'(k+1,k)\tilde{w}(k+1)\tilde{M}(k)$
	$\hat{P}^*(t-1)$	$\tilde{W}(k)$
	$\hat{M}(t)$	$\tilde{\psi}(k+1,k)$
	$\hat{R}(t)$	$\tilde{B}(k)$
	$\hat{Q}(t)$	$\tilde{A}(k)$

Theorem 4.5. The optimal estimation problem and the optimal control problem are duals of each other in the following sense. Let $\tau \geq 0$. Replace every matrix $F(t) = F(t_0+\tau)$ in Eqs. (4.68) through (4.70) by $\hat{F}'(t) = \hat{F}'(T-\tau)$. Then one has Eqs. (4.71) through (4.73). Conversely, replace every matrix $\hat{F}(t) = \hat{F}(T-\tau)$ in Eqs. (4.71) through (4.73) by $F'(t) = F'(t_0+\tau)$. Then one has Eqs. (4.68) through (4.70) where the quantities described by Eqs. (4.68) through (4.73) are presented in Table 4.2.

The question now arises as to whether the same theorem yields a dual result when applied to the submatrices. Consider, for example, the filter gain matrix, $\Delta^*(t)$, and the control gain matrix, $\hat{\Delta}^*(t)$, and make the following definition

$$\Delta^*(t) = \begin{bmatrix} \Delta_1^*(t) \\ \Delta_2^*(t) \\ \vdots \\ \Delta_J^*(t) \end{bmatrix}$$

$$\hat{\Delta}^*(t) = \left[\hat{\Delta}_1^*(t) \;\middle|\; \hat{\Delta}_2^*(t) \;\middle|\; \cdots \;\middle|\; \hat{\Delta}_J^*(t)\right]$$

The problem is now that of determining whether the transformation of Theorem 4.5 applied to $\Delta_i^*(t)$ will yield $\hat{\Delta}_i^*(t)$. Define the following matrices in terms of the submatrices described earlier.

Table 4.2

Relationship Between Estimation and Control Variables in Kalman Notation

	Estimation	Control
1.	$x(t)$ (unobservable) state variables of random processes	$x(t)$ (observable) state variables of plant to be regulated
2.	$y(t)$ observed random variables	$u(t)$ control variables
3.	t_0 first observation	T last control action
4.	$\phi(t_0+\tau+1, t_0+\tau)$ transition matrix	$\hat{\phi}(T-\tau+1, T-\tau)$ transition matrix
5.	$P^*(t_0+\tau)$ covariance of estimation error	$\hat{P}^*(T-\tau)$ matrix of quadratic form for performance index
6.	$\Delta^*(t_0+\ )$ weighting of observation for optimal estimation	$\hat{\Delta}^*(T-\tau)$ weighting of state for optimal control
7.	$\phi^*(t_0+\tau+1, t_0+\tau)$ transition matrix for optimal estimation error	$\hat{\phi}^*(T-\tau+1, T-\tau)$ transition matrix under optimal regulation
8.	$M(t_0+\tau)$ observation matrix	$\hat{M}(T-\tau)$ control transition matrix
9.	$Q(t_0+\tau)$ covariance matrix of plant noise	$\hat{Q}(T-\tau)$ matrix of quadratic form defining state error
10.	$R(t_0+\tau)$ covariance matrix of measurement noise	$\hat{R}(T-\tau)$ matrix of quadratic form defining control effort

From Eq. (4.68), $\Delta^*(t)$ may be expanded as

$$\Delta^*(t) = \begin{bmatrix} \phi_{00} & \cdots & \phi_{0J} \\ \vdots & & \vdots \\ \phi_{J0} & \cdots & \phi_{JJ} \end{bmatrix} \begin{bmatrix} P_{00} & \cdots & P_{0J} \\ \vdots & & \vdots \\ P_{J0} & \cdots & P_{JJ} \end{bmatrix} \begin{bmatrix} M_0' \\ \vdots \\ M_J' \end{bmatrix} [M_0 P_{00} M_0' + R]^{-1}$$

$$= \begin{bmatrix} \phi_{00} & \cdots & \phi_{0J} \\ \vdots & & \vdots \\ \phi_{J0} & \cdots & \phi_{JJ} \end{bmatrix} \begin{bmatrix} \sum_{k=0}^{J} P_{0k} M_k' [M_0 P_{00} M_0' + R]^{-1} \\ \vdots \\ \sum_{k=0}^{J} P_{Jk} M_k' [M_0 P_{00} M_0' + R]^{-1} \end{bmatrix}$$

$$= \begin{bmatrix} \sum_{\ell=0}^{J} \sum_{k=0}^{J} \phi_{0\ell} P_{\ell k} M_k' [M_0 P_{00} M_0' + R]^{-1} \\ \vdots \\ \sum_{\ell=0}^{J} \sum_{k=0}^{J} \phi_{J\ell} P_{\ell k} M_k' [M_0 P_{00} M_0' + R]^{-1} \end{bmatrix}$$

or, $$\Delta_i^* = \sum_{\ell=0}^{J} \sum_{k=0}^{J} \phi_{i\ell} P_{\ell k} M_k' [M_0 P_{00} M_0' + R]^{-1} \tag{4.74}$$

From Eq. (4.71), $\hat{\Delta}^*(t)$ may be expanded as

$$\hat{\Delta}^*(t) = [M_0' P_{00} M_0 + R]^{-1} \underbrace{M_0' \cdots M_J'} \begin{bmatrix} P_{00} & \cdots & P_{0J} \\ \vdots & & \vdots \\ P_{J0} & \cdots & P_{JJ} \end{bmatrix} \begin{bmatrix} \phi_{00} & \cdots & \phi_{0J} \\ \vdots & & \vdots \\ \phi_{J0} & \cdots & \phi_{JJ} \end{bmatrix}$$

$$= [M_0' P_{00} M_0 + R]^{-1} \underbrace{\sum_{k=0}^{J} M_k' P_{k0} \;\Big|\; \cdots \;\Big|\; \sum_{k=0}^{J} M_k' P_{kJ}} \begin{bmatrix} \phi_{00} & \cdots & \phi_{0J} \\ \vdots & & \vdots \\ \phi_{J0} & \cdots & \phi_{JJ} \end{bmatrix}$$

$$= \begin{bmatrix} [M_0'P_{00}M_0 + R]^{-1} \sum_{\ell=0}^{J} \sum_{k=0}^{J} M_k'P_{k\ell}\phi_{\ell 0} \\ \vdots \\ [M_0'P_{00}M_0 + R]^{-1} \sum_{\ell=0}^{J} \sum_{k=0}^{J} M_k'P_{k\ell}\phi_{\ell J} \end{bmatrix}$$

or,
$$\hat{A}_i^*(t) = [M_0'P_{00}M_0 + R]^{-1} \sum_{\ell=0}^{J} \sum_{k=0}^{J} M_k'P_{k\ell}\phi_{\ell i} \tag{4.75}$$

Application of Theorem 4.5 to Eq. (4.74) yields

$$[\hat{A}_i^*(t)]' = \sum_{\ell=0}^{J} \sum_{k=0}^{J} \phi_{i\ell}'P_{\ell k}'M_k'[M_0'P_{00}'M_0 + R']^{-1}$$

or,

$$\hat{A}_i^*(t) = \sum_{\ell=0}^{J} \sum_{k=0}^{J} [M_0'P_{00}M_0 + R]^{-1}M_k'P_{\ell k}\phi_{i\ell} \tag{4.76}$$

From comparison of Eq. (4.75) and (4.76) it is obvious that Theorem 4.5 can not, in general, be extended to the submatrix results. Since, in general, this is not true, then it can be concluded that the duality expressed by Theorem 4.5 does not apply to the corresponding submatrices. Attempts by the author to modify the duality theorem such that the results may be extended to the submatrices have not been fruitful. If such a relationship could be demonstrated then the results of Chapters 2 and 3 should be the duals of each other.

4.6 Summary and Conclusions

In this chapter an alternate expression for discrete systems with time delay has been developed. This expanded state representation is not new, yet it is shown to yield the same results as Chapter 2 and

which used a different approach. These results are, then, submatrix solutions to the expanded state representation. This method presents substantial savings in computation time as well as storage. Examples of these reductions are presented in Chapter 5.

Finally, the expanded state representation allowed demonstration of duality for time delay systems, although this result could not be extended to the corresponding submatrices.

CHAPTER V

COMPUTATIONAL ADVANTAGES OF PARTITIONED SOLUTIONS TO OPTIMAL ESTIMATION AND CONTROL PROBLEMS

5.1 Introduction

Chapter 4 demonstrates that the filter and control gains obtained in this dissertation are identical to results published many years earlier [2,10] using an expanded state representation of time delay systems. The principal difference is that a partitioned form of the resulting algorithms are used rather than the expanded matrices. Since the expanded state representation is generally discredited because of the resulting extensive computation required, one might ask whether or not the partitioned results represent a significant computational savings.

In this chapter analytical expressions are developed for the number of multiplicative and additive operations required for digital computer solution. Options are presented which reduce the number of operations even further in the partitioned form. These are at the expense of additional software requirements, however, and in some cases this more than offsets the advantages of the partitioned form. This is generally true where the system dimension and time delay are small. The savings in computation time are strong functions of the system order, n, and the time delay magnitude, J. No further attempt is made here to define the additional software requirements for the partitioned solution since that depends to a great extent on the ingenuity of the programmer.

Some illustrative examples are presented, where computation time is reduced by more than 90% and storage by more than 60%. For a unit delay, a 30% reduction in both storage requirements and computation time is typical.

5.2 Computational Requirements for Estimation Algorithms

In this section a method of determining the number of discrete multiplicative and additive operations is presented. This method is then used to develop analytic expressions for the number of required operations in terms of the dimensions of the system matrices. Examples are presented at the conclusion of this section which demonstrate a significant reduction in computational requirements for the partitioned algorithm when compared with the entire matrix algorithm of the expanded state form.

Consider the multiplication of two matrices A and B of dimensions $\ell \times m$ and $m \times n$ respectively. The number of discrete multiplicative operations is ℓmn. The number of discrete additive operations required is $\ell(m-1)n$. For ease in calculations, it is assumed for the remainder of this chapter that the number of required additive operations is ℓmn.

The number of required multiplicative and additive operations is determined for the partitioned algorithm expressed by Eqs. (2.115), (2.116), (2.117) and (2.118). The dimensions of the matrices involved are: $P(k+1,k+1|k)$ - $n \times n$, $\phi_i(k+1,k)$ - $n \times n$, $P(k-i,k-j|k)$ - $n \times n$, $P(k+1-i,k+1|k)$ - $n \times n$, $\Gamma(k+1,k)$ - $n \times p$, $Q(k)$ - $p \times p$, $H(k+1)$ - $m \times n$, $R(k+1)$ - $m \times m$, $K_i(k)$ - $n \times m$.

$$P(k+1,k+1|k) = \sum_{i=0}^{J} \sum_{j=0}^{J} \phi_i(k+1,k)P(k-i,k-j|k)\phi_j'(k+1,k)$$

$$+ \Gamma(k+1,k)Q(k)\Gamma'(k+1,k) \qquad (5.1)$$

The product $\phi_i(k+1,k)P(k-i,k-j|k)$ requires n^3 multiplicative operations. This product multiplied times $\phi_j'(k+1,k)$ requires an additional n^3 multiplicative operations, resulting in $2n^3$ multiplicative operations to form the product

$$\phi_i(k+1,k)P(k-i,k-j|k)\phi_j'(k+1,k)$$

The double sum means there are $(J+1)^2$ such terms, or, a total of $2n^3(J+1)^2$ multiplications in the double sum. Similarly, the second term requires a total of $n^2p + p^2n$ operations, yielding a total of $2n^3(J+1)^2 + n^2p + p^2n$ multiplicative operations. The number of additive operations are $n^2[(J+1)^2 - 1]$ for the double sum, plus n^2 by adding $\Gamma(k+1,k)Q(k)\Gamma'(k+1,k)$ to the double sum, or a net of $n^2(J+1)^2$. To this must be added the number of additive operations due to the multiplication process or $2n^3(J+1)^2 + n^2p + p^2n$ such additions. The total number of operations required in determining $P(k+1,k+1|k)$ are

multiplications: $2n^3(J+1)^2 + n^2p + p^2n$

additions: $2n^3(J+1)^2 + n^2p + p^2n + n^2(J+1)^2$

A similar analysis yields the following results for the remaining equations of the partitioned estimation algorithm.

$$K_i(k+1) = P(k+1-i,k+1|k)H'(k+1)[H(k+1)P(k+1,k+1|k)H'(k+1) \qquad (5.2)$$

$$+ R(k+1]^{-1} \quad i = 0, 1, \ldots, J \qquad (5.2)$$

<u>Total Number of Operations for $i = 0, 1, \ldots, J$</u>

multiplications: $n^2m[J+2] + 2nm^2$

additions: $n^2m[J+2] + 2nm^2 + m^2$

$$P(k-j,k+1|k) = \sum_{i=0}^{J} P(k-j,k-i|k)\phi_i'(k+1,k) \qquad j = 0, 1, \ldots, J \tag{5.3}$$

<u>Total Number of Operations for $j = 0, 1, \ldots, J$</u>

multiplications: $n^3J(J+1)$

additions: $n^3J(J+1) + n^2J^2$

$$P(k-i,k-j|k) = P(k-i,k-j|k-1) - K_i(k)H(k)P(k,k-j|k-1) \tag{5.4}$$

<u>Total Number of Operations for $i,j = 0, 1, \ldots, J$</u>

multiplications: $n^2m[(J+1)^2 + (J+1)]$

additions: $n^2m[(J+1)^2 + (J+1)] + n^2(J+1)^2$

The total number of operations required for one complete iteration of the partitioned estimations algorithm are given in Table 5.1. These results are referred to as PARTITION E-1.

The number of required computations may be further reduced by recognizing that not all of the delayed states affect explicitly the one step transition. That is, some of the operations are not required since some of the $\phi_i(k+1,k) = 0$. Let j be the number of $\phi_i(k+1,k)$ which are not identically zero. Then it can be shown that the number of computational operations becomes as shown in Table 5.1. Hereafter, these results are referred to as PARTITION E-2.

Similarly, it can be shown, for the expanded algorithm given by Eqs. (5.5), (5.6) and (5.7) that the number of required operations

Table 5.1

Analytic Expression of Number of Computational Operations Required for Various Estimation Algorithms

PARTITION E-1

multiplications: $n^3[2(J+1)^2 + J(J+1)] + n^2m[(J+1)^2 + 2J + 3] + 2m^2n + n^2p + p^2n$

additions: $n^3[2(J+1)^2 + J(J+10] + n^2m[(J+1)^2 + 2J + 3] + 2m^2n + n^2p + p^2n + m^2 + n^2[2(J+1)^2 + J^2]$

PARTITION E-2

multiplications: $n^3[2j^2 + Jj] + n^2m[2J + 3 + (J+1)^2] + 2m^2n + n^2p + p^2n$

additions: $n^3[2j^2 + Jj] + n^2m[2J + 3 + (J+1)^2] + 2m^2n + n^2p + p^2n + n^2[j^2 + J(j-1) + (J+1)^2] + m^2$

EXPANDED

multiplications: $2n^3(J+1)^3 + 4n^2m(J+1)^2 + 2m^2n$

additions: $2n^2(J+1)^2 + r^2 + 2n^3(J+1)^3 + 4n^2m(J+1)^2 + 2m^2n$

is as shown in Table 5.1. The matrix dimensions are given in Table 5.3.

$$\tilde{K}(k+1) = \tilde{P}(k+1|k)\tilde{H}'(k+1)[\tilde{H}(k+1)\tilde{P}(k+1|k)\tilde{H}(k+1) + \tilde{R}(k+1)]^{-1} \quad (5.5)$$

$$\tilde{P}(k+1|k) = \tilde{\phi}(k+1|k)\tilde{P}(k|k)\tilde{\phi}'(k+1,k) + \tilde{\Gamma}(k+1,k)Q(k)\tilde{\Gamma}'(k+1,k) \quad (5.6)$$

$$\tilde{P}(k+1|k+1) = [I - \tilde{K}(k+1)\tilde{H}(k+1)]\tilde{P}(k+1|k) \quad (5.7)$$

The effect of system order (n) and time delay magnitude (J) on the required computational effort can be seen from Table 5.2, where a number of different examples are considered. The data for PARTITION E-2 assumes a single delay (j = 2) in the system, where the delay magnitude is still specified by J. Note for the cases where there is just a unit delay (n = 2, J = 1) or (n = 10, J = 1) that the partitioned computations require only 60% of that required by the expanded form. For multiple delays, where the delay is longer (n = 1, J = 19) the computational requirements are less than 10% of those required by the expanded form. In general, the savings achieved are an increasing function of the time delay magnitude.

5.3 Storage Requirements for Various Estimation Algorithms

The storage requirements are specified by the size of the matrices used in the algorithms. The partitioned algorithm is given by Eqs. (5.1) - (5.4) and the expanded state algorithm is given by Eqs. (5.5) - (5.7). The matrix dimensions and required storage are given in Table 5.3. Recall that PARTITION E-2 requires storage only for those values of $\phi_i(k+1,k)$ which are not null matrices. Storage requirements are computed for a number of examples in Table 5.4. A 30% reduction in required storage is achieved for a unit delay (J = 1) and a maximum

Table 5.2

Examples of Required Number of Computational Operations For Various Estimation Algorithms

n	J	m	p	operation	EXPANDED	PARTITION E-1	PARTITION E-2
1	3	1	1	mult.	200	73	45
				add.	233	115	69
2	1	1	1	mult.	200	126	126
				add.	233	163	163
4	0	1	1	mult.	200	200	200
				add.	233	233	233
1	19	1	1	mult.	18060	1625	491
				add.	18861	2786	915
2	9	1	1	mult.	18060	2812	702
				add.	18861	3937	1155
4	4	1	1	mult.	18060	5084	1628
				add.	18861	6140	2157
10	1	1	1	mult.	18060	11030	11030
				add.	18861	11931	11931
7	5	1	1	mult.	157087	37457	13790
				add.	161616	41890	16486
						(j=3)	(j=3)

Table 5.3

Analytic Expressions of Required Storage
for Various Estimation Algorithms

EXPANDED REPRESENTATION		PARTITIONED REPRESENTATION			
Matrix	Required Storage	Matrix	Dimensions	Storage E-1	Storage E-2
$\tilde{\phi}(k+1,k)$	$n^2(J+1)^2$	$\phi_i(k+1,k)$	$n \times n$	$n^2(J+1)$	$n^2 j$
$\tilde{P}(k+1\|k)$	$n^2(J+1)^2$	$P(k+1-i,k+1\|k)$	$n \times n$	$n^2(J+1)$	$n^2(J+1)$
$\tilde{P}(k+1\|k+1)$	$n^2(J+1)^2$	$P(k+1-i,k+1-j\|k+1)$	$n \times n$	$n^2(J+1)^2$	$n^2(J+1)^2$
$\tilde{\Gamma}(k+1,k)$	$n(J+1)p$	$\Gamma(k+1,k)$	$n \times p$	np	np
$\tilde{H}(k+1)$	$n(J+1)m$	$H(k+1)$	$n \times m$	nm	nm
$\tilde{Q}(k)$	p^2	$Q(k)$	$p \times p$	p^2	p^2
$\tilde{R}(k+1)$	m^2	$R(k+1)$	$m \times m$	m^2	m^2
$\tilde{K}(k+1)$	$n(J+1)m$	$K_i(k+1)$	$n \times m$	$n(J+1)m$	$n(J+1)m$

Total Storage Required: EXPANDED – $3n^2(J+1)^2 + n(J+1)(2m+p) + p^2 + m^2$

PARTITION E-1 – $n^2[(J+1)^2 + 2(J+1)] + n[(J+2)m + p] + m^2 + p^2$

PARTITION E-2 – $n^2[(J+1)^2 + (J+1) + j] + n[(J+2)m + P] + m^2 + p^2$

savings of 60% can be seen from the analytical expressions for storage requirements in Table 5.3. As in the preceding section, storage requirement savings increase as the time delay magnitude increases.

5.4 Computational Requirements for Control Algorithms

The methods of Section 5.2 are used in this section to determine the computational requirements for the partitioned and expanded control algorithms. Results are obtained for the partitioned algorithm under three conditions. First it is examined for the general case with all ϕ_i not equal to zero. Next the computation is reduced by eliminating all operations for which ϕ_i is equal to zero. Finally, it is shown that, at a nominal cost in additional storage requirements, a substantial reduction in computation time may be achieved by storing the results of some operations which are repeated. As in the estimation problem, the partitioned algorithm represents a computational savings of 30% to 90% over the expanded form.

PARTITION C-1: The partition algorithm is expressed by Eqs. (5.8) and (5.9).

$$S(k) = [\psi'(k+1,k)W_{00}(k+1)\psi(k+1,k) + B(k)]^{-1}\psi'(k+1,k) \cdot [W_{00}(k+1)\phi_i(k+1,k) + W_{0,i+1}(k+1)] \tag{5.8}$$

$$W(k) = [\phi_i(k+1,k)W_{00}(k+1) + W_{i+1,0}(k+1)][\phi_j(k+1,k) + \psi(k+1,k)S_j(k)] + \phi_i'(k+1,k)W_{0,j+1}(k+1) + W_{i+1,j+1}(k+1) + A(k) \tag{5.9}$$

The matrix dimensions are given in Table 5.7. Application of the methods of Section 5.2 yield the number of required operations given in Table 5.5.

Table 5.4

Examples of Required Storage
For Various Estimation Algorithms

n	J	m	p	EXPANDED	PARTITION E-1	PARTITION E-2
1	3	1	1	62	32	30
2	1	1	1	62	44	42
4	0	1	1	62	62	62
1	19	1	1	1262	464	446
2	9	1	1	1262	506	474
4	4	1	1	1262	590	542
10	1	1	1	1262	842	842
7	5	1	1	5420	2410	2263 (j=3)

PARTITION C-2: If the operations are eliminated for those $\phi_i(k+1,k)$ which are equal to zero, the number of operations is reduced. If the number of $\phi_i(k+1,k)$ not equal to zero is j, the resulting number of computations can be shown to be those given in Table 5.5.

PARTITION C-3: Examination of Eqs. (5.8) and (5.9) reveals that the term $[W_{00}(k+1)\phi_i(k+1,k) + W_{0,i+1}(k+1)]$ occurs in the first equation and its transpose occurs in Eq. (5.9). This term may be stored at a storage cost of $n^2(J+1)$ locations, these eliminating the necessity of re-computing a second time for each iteration. The resultant computation requirements are given in Table 5.5.

EXPANDED: The algorithm for the expanded form of control solution is expressed by Eqs. (5.10) and (5.11).

$$\tilde{S}(k) = [\tilde{\psi}'(k+1,k)\tilde{W}(k+1)\tilde{\psi}(k+1,k) + \tilde{B}(k)]^{-1}\tilde{\psi}'(k+1,k)\tilde{W}(k+1)\tilde{\phi}(k+1,k) \tag{5.10}$$

$$\tilde{W}(k) = \tilde{\phi}'(k+1,k)\tilde{W}(k)[\tilde{\phi}(k+1,k) + \tilde{\psi}(k+1,k)\tilde{S}(k)] + \tilde{A}(k) \tag{5.11}$$

The matrix dimensions are given in Table 5.7. The required number of operations per iteration are given in Table 5.5.

The effect of system order (n) and time delay magnitude (J) on the required computational effort can be seen in Table 5.6 where a number of different examples are considered. The data for PARTITION C-2 and PARTITION C-3 assumes a single delay (j = 2) in the system where the delay magnitude is still expressed by J. For the cases where there is just a unit delay, (n = 2, J = 1) and (n = 10, j = 1), the PARTITION C-3 computations are only about 30% of those required for the expanded

Table 5.5

Analytic Expressions for the Number of Computational Operations Required for Various Control Algorithms

PARTITION C-1

multiplications: $n^3[2(J+1)^2 + J + 1] + n^2r[1 + (J+1) + (J+1)^2] + 2nr^2$

additions: $n^2[2(J+1)^2 + J + 1] + n^2r[1 + J + 1 + (J+1)^2] +$

$+ 2nr^2 + r^2 + n^2[J^2 + J + 2(J+1)^2]$

PARTITION C-2

multiplications: $n^3[(J+1)^2 + j(J+2)] + n^2r[1 + (J+1) + (J+1)^2] + 2nr^2$

additions: $n^2[(J+1)^2 + j(J+2)] + n^2r[1 + (J+1) + (J+1)^2] + 2nr^2$

$+ r^2 + n^2[J^2 + 2Jj + 4j - J - 2]$

PARTITION C-3

multiplications: $n^3[(J+1)^2 + j(J+1)] + n^2r[2J+3] + 2r^2n$

additions; $n^3[(J+1)^2 + j(J+1)] + n^2r[2J+3] + 2r^2n + r^2$

$+ n^2[J^2 + jJ + 2j]$

additional storage required: $n^2(J+1)$

EXPANDED

multiplications: $3n^3(J+1)^3 + 3n^2r(J+1)^2 + 2n(J+1)r$

additions: $2n^2(J+1)^2 + r^2 + 3n^3(J+1)^3 + 3n^2r(J+1)^2 + 2n(J+1)r$

Table 5.6

Comparison of Required Number of Computational Operations
For Various Control Algorithms

N	J	r	operation	EXPANDED	PARTITION C-1	j=2 PARTITION C-2	j=2 PARTITION C-3	EXTRA STORAGE
1	3	1	mult.	248	59	47	35	4
			add.	281	103	71	55	
2	1	1	mult.	248	112	112	88	8
			add.	281	153	153	117	
4	0	1	mult.	248	248	248	184	16
			add.	281	281	281	217	
1	19	1	mult.	25240	1243	863	449	20
			add.	26041	2420	1288	853	
2	9	1	mult.	25240	2048	1424	1048	40
			add.	26041	3209	1881	1453	
4	4	1	mult.	25240	4016	2872	2424	80
			add.	26041	5137	3417	2912	
10	1	1	mult.	25240	10720	10720	8520	200
			add.	26041	11721	11721	9221	
						j=3	j=3	
7	5	1	mult.	227640	28875	20228	19183	294
			add.	231169	33874	23169	21437	

form. For multiple delays, where the delay is longer ($n = 1$, $J = 19$) the computational requirements of PARTITION C-1 are less than 5% of those required by the expanded form. In general, the savings achieved are an increasing function of the time delay magnitude.

5.5 Storage Requirements for Various Control Algorithms

The storage requirements are specified by the size of the matrices used in the algorithms. The partitioned algorithm is given by Eqs. (5.8) and (5.9) and the expanded state algorithm is given by Eqs. (5.10 and (5.11). The matrix dimensions and required storage are given in Table 5.7. Recall that PARTITION C-2 requires storage only for those values of $\phi_i(k+1,k)$ which are not null matrices. PARTITION C-3 requires $n^2(J+1)$ storage in addition to that of PARTITION C-2 as explained in the preceding section. Storage requirements are computed for a number of examples in Table 5.8. A 30% reduction in required storage is achieved for a unit delay ($J = 1$) and a maximum savings of 60% can be postulated from the analytical expressions for storage requirements in Table 5.7. Storage requirements decrease as the time delay magnitude increases.

5.6 Summary

As demonstrated in the preceding sections, the partitioned algorithms obtained in this dissertation represent a 30% - 60% reduction in storage requirements when compared with the expanded state representation. A reduction in computational effort of 30% - 95% is also demonstrated. Even greater savings can be realized depending on the example selected. Both the reduction in computation time and storage make the

Table 5.7

Analytic Expressions of Required Storage
For Various Control Algorithms

EXPANDED REPRESENTATION		PARTITIONED REPRESENTATION			
Matrix	Required Storage	Matrix	Dimensions	Storage C-1	Storage C-2
$\tilde{\phi}(k+1,k)$	$n^2(J+1)^2$	$\phi_i(k+1,k)$	$n \times n$	$n^2(J+1)$	$n^2 j$
$\tilde{W}(k+1)$	$n^2(J+1)^2$	$W_{ij}(k+1)$	$n \times n$	$n^2(J+1)^2$	$n^2(J+1)^2$
$\tilde{\psi}(k+1,k)$	$nr(J+1)$	$\psi(k+1,k)$	$n \times r$	nr	nr
$\tilde{A}(k+1)$	$n^2(J+1)^2$	$A(k+1)$	$n \times n$	n^2	n^2
$\tilde{B}(k)$	r^2	$B(k)$	$r \times r$	r^2	r^2
$\tilde{S}(k)$	$nr(J+1)$	$S_i(k)$	$r \times n$	$nr(J+1)$	$nr(J+1)$

Total Storage Required: EXPANDED - $3n^2(J+1)^2 + 2nr(J+1) + r^2$

PARTITION C-1 - $n^2[(J+1)^2 + J + 2] + nr(J+2) + r^2$

PARTITION C-2 - $n^2[(J+1)^2 + j + 1] + nr(J+2) + r^2$

Table 5.8

Examples of Required Storage
for Various Control Algorithms

n	J	r	EXPANDED	PARTITION C-1	PARTITION C-2 (j=2)
1	3	1	57	26	25
2	1	1	57	35	35
4	0	1	57	57	57
1	19	1	1241	441	425
2	9	1	1241	449	435
4	4	1	1241	505	473
10	1	1	1241	731	731
7	5	1	5377	2010	1961 (j=3)

partitioned solutions quite attractive. In retrospect, the expanded state representation of time delay systems does provide algorithms which are computationally feasible after all. The need for a method to solve the expanded equations efficiently is resolved by this paper as the examples of this chapter clearly demonstrate. It should be recalled, however, that the partitioned solution has additional software requirements and this may offset the postulated advantages when J is small.

CHAPTER VI

CONCLUSIONS AND FUTURE WORK

6.1 Conclusions

In Chapters 2, 3 and 4, algorithms are obtained for determining the optimal filter and optimal control gains for discrete linear systems with time delay. In Chapter 4, it is demonstrated that these results are actually partitioned solutions to the expanded state representation of such systems. This expanded representation of time delay systems has been studied but deemed computationally unacceptable by previous authors. The unique nature of such a representation for time delay systems, however, yields a substantial reduction in the computational requirements when the solution is expressed in partitioned form. It is not unlikely that the computations resulting from the partitioned solutions be 80% to 90% less than that formerly required by the expanded matrix solution. Many problems previously considered computationally unfeasible can as a consequence, now be solved.

6.2 Future Work

In the course of achieving these results, a number of related problems associated with time delay systems have arisen.

1. What are the conditions under which continuous stochastic systems may be expressed as discrete systems? The initial conditions on the delay, since it is continuous, and the problem of delays which are not integral multiples of the sample period cause difficulty here.

Some preliminary work by the author suggests that this may be possible for serial systems.

2. Can controllability and observability as expressed in Appendix A, be expressed in partitioned form? The achievement of significant results by partitioning the expanded representation of time delay systems suggests that this approach may be extended to other aspects of time delay systems. In Chapter 5 this effort failed in examining duality, however, so there are some limitations on extending this approach.

3. Are the results of this paper computationally superior to a high order approximation of the time delay? Since the required computation increases as a significant function of the time delay magnitude, it may be more economical (and just as precise) to use a high order approximation to the delay and then use standard techniques such as the Kalman filter for obtaining the final result.

4. Can continuous algorithms be obtained by examining the limiting case of the discrete solutions? The continuous estimation and control solutions are known [3,8] for systems with time delay, but they are computationally untractable for high order systems (greater than $n = 2$) or more than a single unit delay Perhaps the solution to these continuous-time equations may be determined by examining the limiting case of the discrete-time equations. This is certainly true for systems with no time delays.

APPENDIX A

REQUIRED PROOFS FOR CHAPTER II

REQUIRED PROOFS FOR CHAPTER II

In this appendix necessary and sufficient conditions are developed for the observability and controllability of discrete linear systems with time delay. The development below is for the expanded state representation of time delay systems. The reader is referred to Section 4.2 for definitions of the matrices and vectors of the system and measurement equations (A.1) and (A.2).

$$\tilde{x}(k+1) = \tilde{\phi}(k+1,k)\tilde{x}(k) + \tilde{\psi}(k+1,k)\tilde{u}(k) \tag{A.1}$$

$$\tilde{z}(k+1) = \tilde{H}(k+1)\tilde{x}(k+1) \tag{A.2}$$

<u>Observability</u>: First, an observable system is defined as follows:

<u>Definition</u>: The discrete linear system of Eqs. (A.1) and (A.2) is observable if $\tilde{x}(0)$ can be determined from the set of measurements $\{\tilde{z}(1), \ldots, \tilde{z}(N)\}$ for some finite N. If this is true for any initial time ($k = 0$ corresponds to t_0), the system is completely observable.

The following theorem can now be proved.

<u>Theorem A.1</u>: The discrete linear system of Eqs. (A.1) and (A.2) is completely observable if and only if the $mN \times n(J+1)$ matrix

$$\begin{matrix} \tilde{H}(1)\tilde{\phi}(1,0) \\ \tilde{H}(2)\tilde{\phi}(2,1)\tilde{\phi}(1,0) \\ \vdots \\ \tilde{H}(N)\tilde{\phi}(N,N-1) \; . \; . \; . \; \tilde{\phi}(1,0) \end{matrix} \tag{A.3}$$

is of rank $n(J+1)$ for some $N > 0$.

<u>Proof</u>: It is sufficient to consider the case where $\tilde{u}(k) = 0$.

$$\tilde{x}(k+1) = \tilde{\phi}(k+1,k)\tilde{x}(k) \tag{A.4}$$

$$\tilde{z}(k+1) = \tilde{H}(k+1)\tilde{x}(k+1) \tag{A.5}$$

$k = 0, 1, \ldots$ since $\tilde{u}(k)$ is assumed known for all k.

Consider the sequence of measurements $\{z(1), \ldots, z(N)\}$. In order for the matrix defined by Eq. (A.3) to be of rank $n(J+1)$, N is chosen such that the inequality $mN \geq n(J+1)$ is satisfied.

From Eqs. (A.4) and (A.5) the following equations result from the sequence of measurements.

$$\begin{aligned}
\tilde{z}(1) &= \tilde{H}(1)\tilde{x}(1) = \tilde{H}(1)\tilde{\phi}(1,0)\tilde{x}(0) \\
\tilde{z}(2) &= \tilde{H}(2)\tilde{x}(2) = \tilde{H}(2)\tilde{\phi}(2,1)\tilde{\phi}(1,0)\tilde{x}(0) \\
&\vdots \\
\tilde{z}(N) &= \tilde{H}(N)\tilde{x}(N) = \tilde{H}(N)\tilde{\phi}(N,N-1) \ldots \tilde{\phi}(1,0)\tilde{x}(0)
\end{aligned}$$

These equations may be written in matrix form as

$$\tilde{z}_N = \tilde{H}_N\tilde{x}(0) \tag{A.6}$$

where $\tilde{z}_N \equiv \begin{matrix} \tilde{z}(1) \\ \vdots \\ \tilde{z}(N) \end{matrix}$

$$\tilde{H}_N \equiv \begin{matrix} \tilde{H}(1)\tilde{\phi}(1,0) \\ \tilde{H}(2)\tilde{\phi}(2,1)\tilde{\phi}(1,0) \\ \vdots \\ \tilde{H}(N)\tilde{\phi}(N,N-1) \ldots \tilde{\phi}(1,0) \end{matrix} \tag{A.7}$$

It is clear that $\tilde{z}_N$ is an mN vector and $\tilde{x}(0)$ is an $n(J+1)$ vector. Since $mN \geq n(J+1)$ and $\tilde{x}(0)$ is arbitrary, the theory of linear equations may

now be invoked. This theory states that there exists a unique solution to Eq. (A.6) if and only if the matrix $\tilde{H}_N$, as expressed by Eq. (A.7), is of rank n(J+1). Thus Theorem A.1 is established.

<u>Controllability</u>: First, controllability is defined in the following sense.

1. <u>Definition A.2</u>: The discrete linear system of Eq. (A.1) is controllable at time k = 0 (corresponding to an initial time t_0) if there exists a control sequence $\{\tilde{u}(0),\tilde{u}(1),\ldots,\tilde{u}(N-1)\}$ depending on $\tilde{x}(0)$ and the initial time, for which $\tilde{x}(N)$ may be selected arbitrarily, where N is finite. If this is true for all $\tilde{x}(0)$ and initial times, the system is completely controllable.

The following theorem can now be proved.

<u>Theorem A.2</u>: The discrete linear system of Eq. (A.1) is completely controllable if and only if the n(J+1) x rN matrix

$$[\phi(N,N-1)\ldots\phi(2,1)\psi(1,0) \;\ldots\; \phi(N,N-1)\psi(N-1,N-2)\;\; \psi(N,N-1)] \tag{A.8}$$

is of rank n(J+1) for some N > 0.

<u>Proof</u>: The relationships for $\tilde{x}(k)$ may be expressed in terms of $\tilde{x}(0)$ and the control from Eq. (A.1) as

$$\tilde{x}(1) = \tilde{\phi}(1,0)\tilde{x}(0) + \tilde{\psi}(1,0)\tilde{u}(0)$$
$$\tilde{x}(2) = \tilde{\phi}(2,1)\tilde{\phi}(1,0)\tilde{x}(0) + \tilde{\phi}(2,1)\tilde{\psi}(1,0)u(0) + \tilde{\psi}(2,1)\tilde{u}(1)$$
$$\vdots$$
$$\tilde{x}(N) = \tilde{\phi}(N,N-1) \ . \ . \ . \ \tilde{\phi}(1,0)\tilde{x}(0) + \sum_{i=1}^{N} \left[\prod_{j=1}^{i} \tilde{\phi}(j,j-1) \right] \tilde{\psi}(i,i-1)\tilde{u}(i-1)$$

This sequence may be expressed in matrix form as

$$\tilde{x}(N) - \tilde{\phi}_N \tilde{x}(0) = \tilde{\psi}_N \tilde{u}_N \tag{A.9}$$

where $\tilde{x}(N)$ is arbitrary

$$\tilde{\phi}_N \equiv \tilde{\phi}(N,N-1) \ . \ . \ . \ \tilde{\phi}(2,1)\tilde{\phi}(1,0) \tag{A.10}$$

$$\tilde{\psi}_N \equiv \phi(N,N-1)\ldots\phi(2,1)\psi(1,0) \ \ldots \ \phi(N,N-1)\psi(N-1,N-2) \ \psi(N,N-1) \tag{A.1 }$$

$$\tilde{u}_N \equiv \begin{matrix} \tilde{u}(0) \\ \vdots \\ \tilde{u}(N-1) \end{matrix} \tag{A.12}$$

The definition requires that $\tilde{x}(N)$ be arbitrary and it can be seen that $\tilde{x}(N)$ is an $n(J+1)$ vector and $\tilde{u}_N$ is an rN vector where $rN \geq n(J+1)$. Once again, Eq. (A.9) has a unique solution, if and only if the matrix defined by (A.11) is of rank $n(J+1)$ and Theorem A.2 is established.

APPENDIX B

OBSERVABILITY AND CONTROLLABILITY OF TIME DELAY SYSTEMS

OBSERVABILITY AND CONTROLLABILITY OF TIME DELAY SYSTEMS

In this appendix, properties (2.39) - (2.47) are established. Recall the system and measurement equations for systems with time delay.

$$x(k+1) = \sum_{i=0}^{J} \phi_i(k+1,k)x(k-i) + \Gamma(k+1,k)w(k) + \psi(k+1,k)u(k) \quad \text{(B.1)}$$

$$z(k+1) = H(k+1)x(k+1) + v(k+1) \quad \text{(B.2)}$$

These equations may also be imbedded in an expanded state representation

$$\tilde{x}(k+1) = \tilde{\phi}(k+1,k)\tilde{x}(k) + \tilde{\Gamma}(k+1,k)\tilde{w}(k) + \tilde{\psi}(k+1,k)\tilde{u}(k) \quad \text{(B.3)}$$

$$\tilde{z}(k+1) = \tilde{H}(k+1)\tilde{x}(k+1) + \tilde{v}(k+1) \quad \text{(B.4)}$$

where the reader is referred to Section 4.2 for definitions of the expanded matrices and vectors.

The following properties of the vectors are recalled for later use in the proofs below.

$\{x(-i),\ i=0,1,\ldots,J\}$ is a zero mean gaussian random n-vector (B.5)

$\{w(k),\ k=0,1,\ldots\}$ is a zero-mean, p-dimensional gaussian white sequence (B.6)

$\{v(k),\ k=1,2,\ldots\}$ is a zero-mean, m-dimensional gaussian white sequence (B.7)

$\{v(j),\ j=1,2,\ldots\}$ and $\{w(k),\ k=0,1,\ldots\}$ are independent (B.8)

$\{x(-i),\ i=0,1,\ldots,J\}$ is independent of $\{v(k+1),\ k=0,1,\ldots\}$ and $\{w(k),\ k=0,1,\ldots\}$. (B.9)

$\{u(k),\ k=0,1,\ldots\}$ is known or may be specified as desired (B.10)

It can be shown that for a system described by Eq. (B.3), the state of the system at time k may be expressed in terms of the initial state, noise disturbance and control vector as

$$\tilde{x}(k) = \tilde{\phi}(k,0)\tilde{x}(0) + \sum_{\ell=1}^{k} \tilde{\phi}(k,\ell)\tilde{\Gamma}(\ell,\ell-1)\tilde{w}(\ell-1)$$

$$+ \sum_{\ell=1}^{k} \tilde{\phi}(k,\ell)\tilde{\psi}(\ell,\ell-1)\tilde{w}(\ell-1) \qquad \text{(B.11)}$$

The partitioned expression for x(k) can then be written as

$$x(k) = \sum_{i=0}^{J} \tilde{\phi}_{0i}(k,0)x(-i) + \sum_{i=0}^{J} \sum_{\ell=1}^{k} \tilde{\phi}_{i0}(k,\ell)\Gamma(\ell,\ell-1)w(\ell-1)$$

$$+ \sum_{i=0}^{J} \sum_{\ell=1}^{k} \tilde{\phi}_{i0}(k,\ell)\psi(\ell,\ell-1)u(\ell-1) \qquad \text{(B.12)}$$

where $\tilde{\phi}_{ij}(k,\ell)$ is the ij<u>th</u> n x n submatrix of $\tilde{\phi}(k,\ell)$. With the above results, the properties of Chapter 2 can now be established.

<u>Property (2.39)</u>: The stochastic processes $\{x(k),\ k=0,1,\ldots\}$ and $\{z(i),\ i=1,2,\ldots,j\}$ are gaussian. (B.13)

<u>Proof</u>: Consider Eq. (B.12). Recall that $\{u(j),\ j=0,1,\ldots\}$ is a deterministic quantity by property (B.10). Since $\{x(-i),\ i=0,1,\ldots,J\}$ and each $\{w(\ell-1),\ \ell=1,2,\ldots,k\}$ are gaussian by hypothesis, it follows that x(k) is also gaussian for k = 0, 1, ... , since it is merely the sum of gaussian random vectors plus a deterministic vector. Consequently, for any integer m and set of time points $\{t_1, t_2, \ldots, t_m \varepsilon I\}$ the set of random n vectors $x(t_1), x(t_2), \ldots, x(t_m)$ is jointly gaussian distributed and the assertion is proved.

<u>Property (2.40)</u>: $\dot{E}\{x(j)w'(k)\} = 0$ for all $k \geq j$, $j = 0, 1, \ldots$ (B.14)

<u>Proof</u>: Eq. (B.12) may be substituted into Eq. (B.14) to yield

$$\dot{E}\{x(j)w'(k)\} = \sum_{i=0}^{J} \tilde{\phi}_{0i}(k,0)\dot{E}\{x(-i)w'(k)\}$$

$$+ \sum_{i=0}^{J} \sum_{\ell=1}^{j} \tilde{\phi}_{i0}(j,\ell)\Gamma(\ell,\ell-1)\dot{E}\{w(\ell-1)w'(k)\}$$

$$+ \sum_{i=0}^{J} \sum_{\ell=1}^{j} \tilde{\phi}_{i0}(j,\ell)\psi(\ell,\ell-1)u(\ell-1)\dot{E}\{w'(k)\} \quad \text{(B.15)}$$

From property (B.9) the first term on the right-hand side of Eq. (B.15) vanishes for all $k = 0, 1, \ldots$. Since $\{w(k), k=0,1,\ldots\}$ is a white sequence it follows that $E\{w(\ell-1)w'(k)\} = 0$ for all $k \neq \ell-1$. Since $\ell = 1, 2, \ldots, j$ it is clear that the second term vanishes for all $k > j-1$ or $k \geq j$. The third term vanishes since $\{w(k), k=0,1,\ldots\}$ has zero mean. Hence, Property (B.14) is established.

<u>Property (2.41)</u>: $\dot{E}\{z(j)w'(k)\} = 0$ for all $k \geq j$, $j = 0, 1, \ldots$ (B.16)

<u>Proof</u>: Substitute Eq. (B.2) into Eq. (B.16)

$$\dot{E}\{z(j)w'(k)\} = H(j)\dot{E}\{x(j)w'(k)\} + \dot{E}\{v(j)w'(k)\} \quad \text{(B.17)}$$

By virtue of Eq. (B.14) the first term on the right-hand side of Eq. (B.17) vanishes for all $k \geq j$, $j = 0, 1, \ldots$. The second term vanishes by property (B.8) and the assertion (B.16) is established.

<u>Property (2.42)</u>: $\dot{E}\{x(j)v'(k)\} = 0$ for all $j = 0, 1, \ldots$ and $k = 1, 2, \ldots$

(B.18)

<u>Proof</u>: Substitute Eq. (B.12) into Eq. (B.16).

$$\dot{E}\{x(j)v'(k)\} = \sum_{i=0}^{J} \tilde{\phi}_{0i}(j,0)\dot{E}\{x(-i)v'(k)\}$$

$$+ \sum_{i=0}^{J} \sum_{\ell=1}^{j} \tilde{\phi}_{i0}(j,\ell)\Gamma(\ell,\ell-1)\dot{E}\{w(\ell-1)v'(k)\}$$

$$+ \sum_{i=0}^{J} \sum_{\ell=1}^{j} \tilde{\phi}_{i0}(j,\ell)\psi(\ell,\ell-1)u(\ell-1)\dot{E}\{v'(k)\} \quad \text{(B.19)}$$

The first term on the right-hand side vanishes by property (B.9). The second and third terms vanish by properties (B.8) and (B.7) respectively, and property (B.17) is established.

<u>Property (2.43)</u>: $\dot{E}\{z(j)v'(k)\} = 0$ for all $k > j$ where $j,k = 1, 2, \ldots$

(B.20)

<u>Proof</u>: Substitute Eq. (B.2) into Eq. (B.18)

$$\dot{E}\{z(j)v'(k)\} = H(j)\dot{E}\{x(j)v'(k)\} + \dot{E}\{v(j)v'(k)\} \quad \text{(B.21)}$$

The first term on the right-hand side of Eq. (B.19) vanishes by property (B.17). The second term is equal to zero except for $j = k$ since $\{v(k), k=1,2,\ldots\}$ is a white sequence. But $k > j$ by hypothesis and the assertion (B.20) is eatablished.

REFERENCES CITED

1. Priemer, R., and A. G. Vacroux. "Estimation in Linear Discrete Systems with Multiple Time Delays," IEEE Transactions on Automatic Control (Short Papers), Vol. AC-14, pp. 384-387, August 1969.

2. Kalman, R. E., and R. S. Bucy. "New Results in Linear Filtering and Prediction Theory," Journal of Basic Engineering, Trans. ASME, Vol. 83, pp. 95-108, March 1961.

3. Kwakernaak, H. "Optimal Filtering in Linear Systems with Time Delays," IEEE Transactions on Automatic Control., Vol. AC-12, pp. 169-173, April 1967.

4. Larson, R., and D. H. Wells. "Combined Optimum Control and Estimation of Serial Systems with Time Delay," Proc. JACC, pp. 23-33, 1969.

5. Meditch, J. S. Stochastic Optimal Linear Estimation and Control. New York: McGraw-Hill, 1969.

6. Williams, T. L. Unpublished Notes, Dept. of Electrical Engineering, University of Arizona, Tucson, Arizona, August 1970.

7. Truxal, J. G. Control System Synthesis. New York: McGraw-Hill, 1955.

8. Eller, D. H., J. K. Aggarwol and H. T. Banks. "Optimal Control of Linear Time-Delay Systems," IEEE Trans. on Automatic Control, Vol. AC-14, pp. 678-687, December 1969.

9. Koivo, A. J. "Certainty Equivalence in Stochastic Linear Time Lag Systems," Proc. IEEE (letters), pp. 2061-2062, November 1969.

10. Koepcke, R. W. "On the Control of Linear Systems with Pure Time Delay," Proc. JACC, pp. 397-403, 1964.

11. Day, K. S. "Optimal Control of Linear Time Lag Systems," Ph.D. dissertation, Dept. of Elec. Eng'g., University of California, Davis, 1967.

12. Kalman, R. E. and R. W. Koepcke. "Optimal Synthesis of Linear Sampling Control Systems Using Generalized Performance Indexes," Trans. ASME, Vol. 80, p. 1820, 1958.

13. Joseph, P. D. and J. D. Tow. "On Linear Control Theory," Trans. AIEE, pt. II, Vol. 80, p. 193, 1961.

14. Gunckel, T. L., II, and G. F. Franklin. "A General Solution for Linear Sampled Data Control," J. Basic Eng'g., Vol. 85, p. 197, 1963.

BIBLIOGRAPHY

1. Ahmed, N. U. "Optimal Control of a Large Class of Stochastic Differential Systems with Finite Memory," Proc. 3rd Annual Allerton Conference on Circuit System and Theory, pp. 44-53. Urbana, Illinois, October 1969.

2. Alekal, Y. "Feedback Controller Synthesis for Systems with Time Delay," Ph.D. Thesis, University of Minnesota, 1968.

3. Alekal, Y. "Optimal Control of Linear Systems with Time Delay," Proc. National Electronics Conference, pp. 74-78, 1969.

4. Alekal, Y., P. Brunovsky and E. B. Lee. "Synthesis of Feedback Controllers for Time Delay Systems," Conference on Optimal Control and Minimal Surfaces, Tbilisili, U.S.S.R., September 1969.

5. Banas, J. F. and A. G. Vacroux. "Comments on 'Necessary Conditions for the Optimal Control of a System with Time-Varying Transport Lags,'" IEEE Trans. on Automatic Control (Correspondence), Vol. AC-13, pp. 208-209, April 1968.

6. Banas, J. F. and A. G. Vacroux. "On Linear Systems with a Time-Varying Delay and Isoperimetric Constraints," IEEE Trans. on Automatic Control (Correspondence), Vol. AC-13, pp. 439-440, August 1968.

7. Banas, J. F. and A. G. Vacroux. "On the Optimal Aperiodic Control of Time Lag Systems," Second Asilomar Conference on Circuits and Systems, pp. 340-344, 1968.

8. Banas, J. F. and A. G. Vacroux. "Discrete Optimal Control of Multivariable Systems with Transport Lags," Proc. IFAC Symposium on Multivariable Control Systems, Duesseldorf, Germany, 1968.

9. Banas, J. F. and A. G. Vacroux. "On the Optimal PW - PA Control of Time-Lag Systems," Proc. of 2nd Hawaii International Conf. on Systems Science, pp. 135-138, 1969.

10. Banks, H. T. "Optimal Control Problems with Delays," Ph.D. Thesis, Purdue University, 1967.

11. Banks, H. T. "Necessary Conditions for Control Problems with Variable Lags," SIAM J. Control, Vol. 6, pp. 9-47, 1968.

12. Becker, S. and P. V. Loprestí. "On the Discrete Optimization of Linear Delay Systems," Proc. National Electronics Conference, pp. 125-130, 1967.

13. Bellman, R. L. and K. L. Cooke. Differential-Difference Equations. New York: Academic Press, 1963.

14. Bellman, R. L., H. H. Kagiwada and R. E. Kalaba. "Quasilinearization and Estimation of Time Lags," Mathematical Biosciences 1, pp. 39-44, 1967.

15. Bendrikov, G. A. and F. B. Konev. "Investigation of High-Order System with 'Pure' Delay Using the Method of Root Loci," Automation and Remote Control, pp. 502-511, April 1969.

16. Bhatt, S. J. and C. S. Hsu. "Stability Criteria for Second-Order Dynamic Systems with Time-Lag," Journal of Applied Mechanics, Vol. 33, Series E, No. 1, March 1966.

17. Boyanovitch, D. "Variational Problems with Argument Lags," Research Notes RN-179, Grumman Aircraft Engineering Corporation, Research Dept., March 1964.

18. Brookes, B. E. and R. A. Johnson. "Limit Cycles in Time-Delay Relay Systems," Int'l. J. on Control, Vol. 9, No. 4, pp. 387-398, 1969.

19. Brown, R. G. and G. L. Hartmann. "Kalman Filter with Delayed States as Observables," Proc. National Electronics Conference, pp. 67-72, 1968.

20. Buckalo, A. F. "Controllability of Systems with Time Lag," Sc. M. Thesis, Brown University, Providence, R. I., 1967.

21. Buckalo, A. F. "Explicit Conditions for Controllability of Linear Systems with Time Lag," IEEE Trans. on Automatic Control (Short Papers), Vol. AC-13, pp. 193-195, April 1968.

22. Buckley, P. S. "Automatic Control of Processes with Dead Time," Proc. 1st IFAC Congress (Moscow), Vol. 1, p. 33, 1960.

23. Budelis, J. J. and A. E. Bryson, Jr., "Some Optimal Control Results for Differential-Difference Systems," IEEE Trans. on Automatic Control (Short Papers), Vol. AC-15, pp. 237-241, April 1970.

24. Buyakas, V. I. and A. A. Piontkovskii. "Analytical Considerations in the Design of Regulators for Systems with Time-Delay in a Servomechanism," Automation and Remote Control, pp. 163-165, February 1969.

25. Choksy, N. H. "Analytic Determination of the Stability of Servomechanisms and Other Automatic Control Systems Having Transcendental Characteristic Equations," Ph.D. dissertation, University of Wisconsin, 1955.

26. Chyung, D. H. "Discrete Systems with Time Delay," Proc. 5th Annual Allerton Conference on Circuit System and Theory, pp. 222-227, Urbana, Illinois, October 1967.

27. Chyung, D. H. "Linear Time-Lag Systems with Side Constraints," IEEE Trans. on Automatic Control (Short Papers), Vol. AC-12, pp. 434-435, August 1967.

28. Chyung, D. H. "Linear Time-Lag Systems with Side Constraints," Proc. JACC, pp. 470-473, 1967.

29. Chyung, D. H. "Discrete Optimal Systems with Time Delay," IEEE Trans. on Automatic Control (Correspondence), Vol. AC-13, p. 117, February 1968.

30. Chyung, D. H. "Optimal Time-Lag Systems with Sensitivity Constraint," IEEE Trans. on Automatic Control (Correspondence), Vol. AC-13, p. 736, December 1968.

31. Chyung, D. H. "Discrete Systems with Delay in Control," IEEE Trans. on Automatic Control (Correspondence), Vol. AC-14, pp. 196-197, April 1969.

32. Chyung, D. H. "On the Controllability of Linear Systems with Delay in Control," Proc. 7th Annual Allerton Conference on Circuit System and Theory, pp. 19-22, October 1969.

33. Chyung, D. H. "On the Controllability of Linear Systems with Delay in Control," IEEE Trans. on Automatic Control (Correspondence), Vol. AC-15, pp. 255-257, April 1970.

34. Chyung, D. H. "A Pursuit-Evasion Game of Linear Systems with Delay," IEEE Trans. on Automatic Control (Correspondence), Vol. AC-15, pp. 387-389, June 1970.

35. Chyung, D. H. and E. B. Lee. "Linear Optimal Systems with Time Delay," SIAM J. Control, Vol. 4, pp. 548-575, November 1966.

36. Chyung, D. H. and E. B. Lee. "Optimal Systems with Time Delay," Proc. 3rd IFAC Congress (London), 1966.

37. Chyung, D. H. and E. B. Lee. "Control of Linear Time Delay Systems with Essentially Linear Cost Functionals," Differential Equations and Dynamical Systems, J. K. Hale and J. P. LaSalle, eds. New York: Academic Press, 1967.

38. Chyung, D. H. and E. B. Lee. "Delayed Action Control Problems," Proc. 4th IFAC Congress (Warsaw), 1969.

39. Chyung, D. H. and E. B. Lee. "Delayed Action Control Problems," Automatica, Vol. 6, No. 3, pp. 395-400, May 1970.

40. Ciletti, M. D. "A Differential Game with an Information Time Lag," Proc. of the First Int'l. Conference on the Theory and Application of Differential Games, University of Massachusetts, Amherst, Massachusetts, September 1969.

41. Ciletti, M. D. "A Differential Game with an Information Lag," Proc. 3rd Hawaii Int'l. Conf. on System Sciences, pp. 882-885, 1970.

42. Cohen, G. M. "Shift Matrices and Their Application," IEEE Trans. on Automatic Control (Short Papers), Vol. AC-11, pp. 543-550, July 1966.

43. Das, P. C. and R. R. Sharma. "On Optimal Controls for Measure Delay-Differential Equations," SIAM J. Control, pp. 43-61, February 1971.

44. Day, K. S. "Optimal Control of Linear Time-Lag Systems," Ph.D. dissertation, Dept. of Elec. Eng'g., University of California, Davis, 1967.

45. Day, K. S. and T. C. Hsia. "Optimal Control of Linear Time Lag Systems," Proc. JACC, pp. 1046-1055, 1968.

46. Degtyarev, G. L. and T. K. Sirazetdinov. "Optimal Control of One-Dimensional Processes with Retarded Arguments," Automation and Remote Control, pp. 28-36, January 1970.

47. Diver, R. D. "Existence and Stability of Solutions of a Delay Differential System," Archives for Rational Mechanics and Analysis, Vol. 10, No. 5, pp.401-426, 1962.

48. Eisenberg, L. "Stability of Linear Systems with Transport Lag," IEEE Trans. on Automatic Control, Vol. AC-11, pp. 247-254, April 1966.

49. Eisenberg, L. "Stability of Linear Systems with Transport Lag," IEEE Int'l. Convention Record, Pt. 6, Vol. 14, pp. 207-218, 1966.

50. Eisenberg, L. and J. J. Padalino. "Root-Locus Method for Systems with Transport Lag," Proc. National Electronics Conference, pp. 661-666, 1966.

51. Eller, D. H. "Optimal Control of Time Delay Systems," Ph.D. dissertation, Dept. of Elec. Eng'g., University of Texas, Austin, Texas, 1969.

52. Eller, D. H., J. K. Aggarwol and H. T. Banks. "Optimal Control of Linear Time-Delay Systems," IEEE Trans. on Automatic Control, Vol. AC-14, pp. 678-687, December 1969.

53. Falb, P. L. and D. L. Kleinman. "Remarks on the Infinite Dimensional Riccati Equation," IEEE Trans. on Automatic Control, Vol. AC-11, pp. 534-536, 1966.

54. Faure, F. and F. J. Evans. "Identification of Process Delay Time," IEEE Trans. on Automatic Control (Correspondence), Vol. AC-14, pp. 421-422, August 1969.

55. Ferrell, W. R. "Remote Manipulation with Transmission Delay," IEEE Transactions on Human Factors in Electronics, Vol. HFE-6, No. 1, pp. 24-32, September 1965.

56. Fountain, F. H. and C. A. Halijak. "An Approximate Identity Operator for Continuous Servo mechanism with Time Lag," Proc. 4th Annual Allerton Conf. on Circuit System and Theory, p. 914, Urbana, Illinois, October 1966.

57. Fuller, A. T. "Optimal Nonlinear Control of Systems with Pure Delay," Int'l. J. Control, Vol. 8, No. 2, pp. 145-168, 1968.

58. Friedman, A. "Optimal Control for Hereditary Processes," Arch. Rational Mech. Anal., Vol. 15, pp. 396-414, 1964.

59. Gabasov, R. and S. V. Churakova. "Necessary Optimality Conditions in Time-Lag Systems," Automation and Remote Control, pp. 37-54, January 1968.

60. Gabasov, R. and S. V. Churakova. "Sufficient Conditions for Optimality in Systems with a Delay," Automation and Remote Control, pp. 193-209, February 1968.

61. Giloi, W. "Optimized Feedback Control of Dead Time Plants by Complementary Feedback," Proc. JACC, pp. 211-217, 1963.

62. Gruber, M. "Path Integrals and Lyapunov Functionals," IEEE Trans. on Automatic Control, Vol. AC-14, pp. 465-475, October 1969.

63. Guardabassi, G. and S. Rinaldi. "Optimization of Discrete Systems with Delayed Control Variables -- A Structural Approach," Automation and Remote Control, pp. 1063-1067, July 1968.

64. Halanay, A. "Periodic Solutions of Linear Systems with Lag," Revue de Math. Pure et Appliques, Acad. R. S. R., Vol. VI, No. 1, 1961.

65. Halanay, A. Differential Equations -- Stability, Oscillations, Time Lags. New York: Academic Press, 1966.

66. Halanay, A. "Differential Games with Delay," SIAM J. Control, pp. 579-593, November 1968.

67. Halanay, A. "Optimal Controls for Systems with Time Lag," SIAM J. Control, pp. 215-234, May 1968. (See also "erratum," SIAM J. Control, p. 142, February 1971.)

68. Hale, J. K. "Averaging Methods for Differential Equations with Retarded Arguments and a Small Parameter," Tech. Report No. 64-1, Center for Dynamical Systems, Division of Applied Mathematics, Brown University, Providence, R. I., November 1964.

69. Hale, J. K. "Sufficient Conditions for Stability and Instability of Autonomous Functional-Differential Equations," J. Differential Equations, 1, pp. 452-485, 1965.

70. Hamza, M. H. "Extremum Control in the Presence of Variable Pure Delay," Theory of Self-Adaptive Control Systems, pp. 290-298, New York: Plenum Press, 1966.

71. Hiratsuka, S. and A. Ichikawa. "Optimal Control of Systems with Transportation Lags," IEEE Trans. on Automatic Control, Vol. AC-14, pp. 237-247, June 1969.

72. Horwitz, L. B. "On Computing Optimal Control Signals for Systems with Time Delays," Proc. of 3rd Hawaii Int'l. Conf. on System Sciences, pp. 363-366, 1970.

73. Jen-Wei, Chang. "The Problem of Synthesizing an Optimal Controller in Systems with Time Delay," Automation and Remote Control, pp. 121-125, February 1962.

74. Johnson, R. A. "Comment on the Approximation of a System with Delay by an Ordinary Differential System," IEEE Trans. on Automatic Control (Correspondence), Vol. AC-13, pp. 755-756, December 1968.

75. Kalachev, M. G. and A. M. Petrovskii. "Effect of Noise on an Ideal Relay which Includes Delayed Feedback," Automation and Remote Control, pp. 1894-1900, November 1966.

76. Kashiwagi, Y. and I. Flugge-Lotz. "Stability of Linear Systems with Time Delay," TR-156, Stanford University, 1965.

77. Kashiwagi, Y. and J. D. Shaughnessy. "Stability of Linear Systems with Multiple Delays," Proc. of the Canadian Congress of Applied Mechanics, Quebec, Canada, May 1967.

78. Kashiwagi, Y. and J. D. Shaughnessy. "Stability Indicative Function and its Application to the Linear Systems with Multiple Delays," Proc. of Hawaii Int'l. Conf. on System Sciences, pp. 189-192, 1968.

79. Khalani, A. "Absolute Stability of Certain Non-Linear Control Systems with Lags," Automation and Remote Control, pp. 268-279, March 1964.

80. Khalani, A. "Absolute Stability of Non-Linear Control Systems with Delay Arguments," Automation and Remote Control, pp. 1251-1256, August 1964.

81. Kharatishvilli, G. L. "The Maximum Principle in the Theory of Optimal Processes with Time Lags," Dokl. Akad. Nauk SSSR, Vol. 136, No. 1, pp. 39-42, 1961.

82. Kharatishvilli, G. L. "A Maximum Principle in External Problems with Delays," Proc. Conf. on Mathematical Theory of Control, University of Southern Calif., A. V. Balakrishnan and L. W. Neustadt, eds., New York: Academic Press, pp. 26-34, 1967.

83. Khatri, H. C. "Optimum Control of Linear Systems with Transportation Lag," J. of Basic Eng'g., pp. 385-392, June 1967.

84. Kim, M. and C. H. Yeh. "Stability Analysis of Time Lag Systems," Proc. IEEE (letters), p. 1366, November 1964.

85. Kirillova, F. M. and S. V. Curakova. "On the Problem of Controllability of Linear Systems with After-Effect," (Russian), Diff. Urav., Vol. 3, pp. 436-445, 1967.

86. Kitamura, S., K. Hirai and M. Nishimura. "Stability of a Control System with Several Nonlinear Elements and Time Lags," Tech. Report 758, Osaka Univ., Vol. 17, pp. 93-102, 1966.

87. Kleinman, D. L. "Optimal Control of Linear Systems with Time Delay and Observation Noise," IEEE Trans. on Automatic Control, (Short Papers), Vol. AC-14, pp. 524-527, October 1969.

88. Koepcke, R. W. "On the Control of Linear Systems with Pure Time Delay," Proc. JACC, pp. 397-403, 1964.

89. Koepcke, R. W. "On the Control of Linear Systems with Pure Time Delay," J. of Basic Eng'g., pp. 74-78, March 1965.

90. Koivuniemi, A. J. and P. F. Schweizer. "On Optimal Control Systems with Adjustable Delay Times," Proc. National Electronics Conference, pp. 120-124, 1967.

91. Koivuniemi, A. J. and P. F. Schweizer. "Design of Optimal Control Systems with Pure Time Delay," Proc. of Hawaii Int'l. Conf. on System Sciences, pp. 33-36, 1968.

92. Koivuniemi, A. J. and R. L. Stoller. "On Estimation of State Variables in Time-Lag Systems," 2nd Annual Princeton Conference on Information Sciences and Systems, Princeton, N. J., 1968.

93. Koivo. A. J. "On Optimum Control of Systems with Time Lag and State Variable Constraints," Proc. National Electronics Conference, pp. 130-135, 1968.

94. Koivo, A. J. "Certainty Equivalence in Stochastic Linear Time Lag Systems," Proc. IEEE (letters), pp. 2061-2062, November 1969.

95. Koivo, A. J. "On Identification of Time Lag in Dynamical Systems," Proc. JACC, pp. 782-786, 1969.

96. Koivo, A. J. and R. L. Stoller. "On Least Squares Estimation in Non-Linear Dynamical Systems with Time Delay," Proc. JACC, pp. 116-121, 1968.

97. Koralev, N. A. "Compensation of Delay in a Relay System," Automation and Remote Control, pp. 523-530, May 1961.

98. Krall, A. M. "Stability Criteria for Feedback Systems with Time Lag," SIAM J. Control, Vol. 2, No. 2, pp. 160-170, 1964.

99. Krall, A. M. "The Asymptotes of the Time Lag Root Locus," SIAM J. Control, Vol. 2, No. 3, pp. 370-372, 1964.

100. Kramer, J. D. "On Control of Linear Systems with Time Lags," Information and Control, Vol. 3, pp. 299-326, 1960.

101. Krasovskii, N. N. "Analytic Construction of an Optimal Regulator in a System with Time Lags," Principles of Math. and Mech., Vol. 26, No. 1, pp. 50-67, 1962.

102. Krasovskii, N. N. "Optimal Control Under Conditions of Lagging Feedback," Automation and Remote Control, pp. 931-945, August 1963.

103. Krasovskii, N. N. "Optimal Processes in Systems with Time Lag," Proc. 2nd IFAC Congress, Vol. I, 1963.

104. Krasovskii, N. N. "The Approximation of a Problem of Analytic Design of Controls in a System with Time Lag," Principles of Math. and Mech., Vol. 28, No. 4, pp. 716-724, 1964.

105. Krasovskii, N. N. "Optimal Processes in Systems with Time Lags," Proc. 2nd IFAC Congress, Basel, Switzerland, 1963.

106. Krasovskii, N. N. and Y. S. Osipov. "The Stabilization of Motion of a Controllable Object with Time Lag in Control System," Tekhnicheskaya Kibernetika, No. 6, 1963.

107. Kurzweil, F., Jr. "The Control of Multivariable Processes in the Presence of Pure Transport Delays," IEEE Trans. on Automatic Control, Vol. AC-8, p. 27, January 1963.

108. Kwakernaak, H. "Optimal Filtering in Linear Systems with Time Delays," IEEE Trans. on Automatic Control, Vol. AC-12, pp. 169-173, April 1967.

109. Larson, R. E. and C. H. Wells. "Combined Optimum Control and Estimation of Serial Systems with Time Delay," Proc. JACC, pp. 23-33, 1969.

110. Lawrence, G. A. "Optimal Control of Systems with Time Delay," Ph.D. dissertation, Northwestern University, Evanston, Illinois, June 1969.

111. Lee, E. B. "Variational Problems for Systems Having Delay in the Control Action," IEEE Trans. on Automatic Control (Short Papers), Vol. AC-13, pp. 697-699, December 1968.

112. Lee, E. B. "Optimal Control of Systems with Time Delays," Proc. JACC, pp. 451-452, 1969.

113. Lee, G. M. "Non-Linear Filtering with Observational Delays," Proc. 3rd Hawaii Int'l. Conf. on System Sciences, pp. 469-472, 1970.

114. Leonov, N. N. "Difference-type Relay External Systems with Transport Delays," Automation and Remote Control, pp. 1780-1789, November 1969.

115. Loo, S. G. "Stability of Linear Stationary Systems with Time Delay," Int'l. J. Control, Vol. 9, No. 1, pp. 387-398, 1969.

116. Lopresti, P. V. and S. L. Uppal. "Closed Loop Optimization of Linear Delay Systems," Proc. National Electronics Conference, p. 824, 1967.

117. Lorchirachoonkul, V. "Deadbeat Response of Time-Delayed Systems with Minimal Overshoot Compromise," IEEE Trans. on Automatic Control (Correspondence), Vol. AC-12, pp. 468-469, August 1967.

118. MacKinnon, D. "Optimal Control of Systems with Pure Time Delays Using a Variational Programming Approach," IEEE Trans. on Automatic Control, Vol. AC-12, pp. 255-262, December 1967.

119. Markushin, E. M. and S. N. Shimanov. "The Approximate Analytic Design of a Control for an Equation with Time Lag," Differentsial'nye Uravneniya, 1, No. 5, 1965.

120. Markushin, E. M. and S. N. Shimanov. "Approximate Analytic Design of Controls for Systems with Time Lag," Automation and Remote Control, pp. 367-374, March 1968.

121. McAulay, R. J. "A Gradient Method for Systems with Time Delays and its Application to Waveform Design," IEEE Trans. on Automatic Control, Vol. AC-14, pp. 230-236, June 1969.

122. Meerov, M. V. "Some Peculiarities of the Structure of Multiple Control Systems," Proc. 1st IFAC Congress (Moscow), pp. 85-89, 1960.

123. Milyutkin, V. P. "Maximum Principle for Problems with Delays, Fixed Durations, and Free Trajectory Right Ends," Automation and Remote Control, pp. 882-889, June 1968.

124. Mueller, T. E. "Optimal Control of Linear Systems with Time Lag," Coordinated Science Lab. Report R-254, University of Illinois, Urbana, Illinois, June 1965.

125. Mueller, T. E. "Optimal Open-Loop Control of Linear Systems with Time Lag," Proc. 3rd Annual Allerton Conf. on Circuit System and Theory, pp. 339-345, October 1965.

126. Murray, T. "Bang-Bang Rate Damping with Time Delay and Time Lag," IEEE Trans. on Automatic Control (Correspondence), Vol. AC-11, p. 137, January 1966.

127. Mufti, I. H. "The Stability of Systems with Lag," Mech. Eng. Report MK-16, Nat. Research Council of Canada, Ottawa, March 1965.

128. Mufti, I. H. "A Note on the Stability of an Equation of Third Order with Time Lag," IEEE Trans. on Automatic Control (Correspondence), Vol. AC-9, pp. 109-191, April 1964.

129. Norosel'tsev, V. N. "Optimal Control in the Presence of Delay," Automation and Remote Control, pp. 1395-1397, November 1964.

130. Oetker, R. "On the Control of Sectors with Dead Time," Proc. 1st IFAC Congress (Moscow), pp. 22-25, 1960.

131. Osipov, Y. S. "The Stabilization of Controlled Systems with Time Lag," Differentsial'nye Uravneniya, 1, No. 5, 1965.

132. Oguztoreli, M. N. "A Time Optimal Control Problem for Systems Described by Differential-Difference Equations," SIAM J. Control, Vol. 1, pp. 290-310, August 1963.

133. Oguztoreli, M. N. "Relay Type Control with Retardation and Switching Delay," SIAM J. Control, Vol. 1, No. 3, pp. 275-289, 1963.

134. Oguztoreli, M. N. "Optimal Pursuit Strategy Processes with Retarded Control Systems," SIAM J. Control, Vol. 2, No. 1, pp. 89-105, 1964.

135. Oguztoreli, M. N. Time Lag Control Systems. New York: Academic Press, 1966.

136. Oziganova, I. A. "On the Theory of Optimal Control of Systems with Time Lag," Seminar on Differential Equations with Deviating Arguments, University of the Friendship of Peoples, Moscow, Vol. II, pp. 136-145, 1963. See also "On the Theory of Optimal Control for Problems with Time Lag," Thesis, University of the Friendship of Peoples, Moscow, 1966.

137. Popov, V. M. and A. Khalani. "On the Stability of Non-Linear Automatic Control Systems with Lagging Argument," Automation and Remote Control, pp. 783-786, July 1962.

138. Popov, V. M. and A. Khalani. "A Problem in the Theory of Time-Delay Optimum Systems," Automation and Remote Control, pp. 129-131, February 1963.

139. Priemer, R. and A. G. Vacroux. "Estimation in Linear Discrete Systems with Time Delay," Proc. National Electronics Conference, pp. 64-66, 1968.

140. Priemer, R. and A. G. Vacroux. "Smoothing in Linear Discrete Systems with Multiple Time Delays," Second Asilomar Conference on Circuits and Systems, pp. 136-140, 1968.

141. Priemer, R. and A. G. Vacroux. "Estimation in Linear Discrete Systems with Multiple Time Delays," IEEE Trans. on Automatic Control (Short Papers), Vol. AC-15, pp. 237-241, April 1970.

142. Priemer, R. and A. G. Vacroux. "Fixed Lag Smoothing in Linear Discrete Systems with Time Delays," Proc. 7th Annual Allerton Conf. on Circuit System and Theory, pp. 389-390, Urbana, Illinois, October 1969.

143. Priemer, R. and A. G. Vacroux. "On Smoothing in Linear Discrete Systems with Time Delays," Int'l. J. Control, Vol. 13, No. 2, pp. 299-303, February 1971.

144. Pyatnitskii, E. S. "On the Structural Stability of Single-Loop Control Systems in the Presence of Lag," Automation and Remote Control, pp. 787-797, July 1962.

145. Pyatnitskii, E. S. "The Upper Bound on the Degree of Stability for Time-Lag Systems," Automation and Remote Control, pp. 434-439, April 1963.

146. Ragg, B. C. "Necessary Conditions for the Optimal Control of a System with Time-Varying Transport Lags," IEEE Trans. on Automatic Control (Short Papers), Vol. AC-11, pp. 738-740, July 1966. See also Correspondence IEEE Trans. on Automatic Control, Vol. AC-13, pp. 208-209, April 1968.

147. Ray, W. H. and M. A. Solimar. "The Optimal Control of Processes Containing Pure Time Delays," Proc. JACC, pp. 476-484, 1970.

148. Razumikhin, B. S. "Stability of Nonlinear Automatic Control Systems with Lag," Inzhenernyi sb., Vol. 29, 1960.

149. Reeve, P. J. "A Method of Approximating to Pure Time Delay," Int'l. J. Control, Vol. 8, No. 1, pp. 53-63, 1968.

150. Reeve, P. J. "Time Optimal Control of Linear Systems with Delay," Int'l. J. Control, Vol. 11, No. 4, pp. 659-682, April 1970. See also Correspondence Int'l. J. Control, Vol. 13, No. 1, pp. 201-203, January 1971.

151. Rekasius, Z. V. and G. A. Lawrence. "Minimum Energy Control of Systems with Time Delay," IEEE Trans. on Automatic Control (Short Papers), Vol. AC-15, pp. 365-368, June 1970.

152. Repin, I. M. "On the Approximate Replacement of Systems with Lag by an Ordinary Dynamical System," Principles of Math. and Mech., Vol. 29, No. 2, pp. 254-264, 1965.

153. Reowick, J. B. "A Delay Regulator," Proc. 1st IFAC Congress (Moscow), 1960.

154. Roberts, A. P. "An Adaptive Lagging System," Theory of Self-Adaptive Control Systems, pp. 198-203, New York: Plenum Press, 1966.

155. Robinson, W. R. "Identification and Parameter Optimization of Linear Systems with Time Delay," M. A. Sc. Thesis, Dept. of Elec. Eng'g., University of British Columbia, Vancouver, B. C., Canada, June 1966.

156. Robinson, W. R. and A. C. Soudack. "A Method for the Identification of Time Delays in Linear Systems," IEEE Trans. on Automatic Control (Short Papers), Vol. AC-15, pp. 237-241, April 1970.

157. Ross, D. W. "Optimal Control of Systems Described by Differential-Difference Equations," Ph.D. dissertation, Dept. of Elec. Eng'g., Stanford University, Stanford, Calif., 1968.

158. Ross, D. W. "Optimal Control of Systems with Transport Lag with Applications to Process Control," Proc. of 2nd Hawaii Int'l. Conf. on Systems Science, pp. 131-134, 1969.

159. Ross, D. W. and I. Flugge-Lotz. "An Optimal Control Problem for Systems with Differential-Difference Equation Dynamics," SIAM J. Control, pp. 609-623, November 1969.

160. Rozenvasser, E. N. "The Theory of Linear Systems with Stationary Delay and a Periodically Varying Parameter," Automation and Remote Control, pp. 956-964, July 1964.

161. Salukvadze, M. E. "Concerning the Synthesis of an Optimal Controller in Linear Delay Systems Subjected to Constantly Acting Perturbations," Automation and Remote Control, pp. 1495-1501, December 1962.

162. Sannuti, P. "Near Optimum Design of Time Lag Systems by Singular Perturbation Method," Proc. JACC, pp. 489-496, 1970.

163. Schweizer, P. F. "Design of Optimal Control Systems with Time Delay," Ph.D. dissertation, Dept. of Elec. Eng'g., Purdue University, August 1968.

164. Schweizer, P. F. and A. J. Koivo. "On Optimal Systems with Varying Time Lag and Stability Constraints," Proc. National Electronics Conference, pp. 68-73, 1969.

165. Sebesta, H. R. "Analysis and Design of Optimal Control Systems for Dynamical Processes with Time Delays," Ph.D. dissertation, University of Texas, 1966.

166. Sebesta, H. R. and L. G. Clark. "On Optimization and the Guidance Problem for Systems with Transport Lags," Southeastern Symposium in Missile and Aerospace Sciences, American Astronautical Society, Huntsville, Alabama, December 1966.

167. Sebesta, H. R. and L. G. Clark. "On the Optimal Control Problem for Dynamical Processes with Variable Delays," Proc. JACC, pp. 326-334, 1967.

168. Sebesta, H. R. and L. G. Clark. "On the Optimal Control Problem for Dynamical Processes with Variable Delays," J. of Basic Eng'g., pp. 181-186, June 1968.

169. Seborg, D. E. "Stability of Nonlinear Systems Containing Time Delays," Ph.D. dissertation, Dept. of Chem. Eng'g., Princeton University, Princeton, N. J., June 1969.

170. Seborg, D. E. and E. F. Johnson. "Construction of Regions of Stability for Nonlinear Systems Containing Time Delays," Proc. JACC, pp. 246-253, 1970.

171. Shak, F. K. "Optimal Control of Discrete Systems with Time Lag," Automation and Remote Control, pp. 1065-1073, July 1970.

172. Shigin, E. K. "Automatic Control of a Pure-Lag Plant by a Controller with Switchable Parameters, I," Automation and Remote Control, pp. 1612-1618, October 1965.

173. Shigin, E. K. "Automatic Control of a Plant with a Pure Time Lag by a Regulator with Switchable Parameters, II," Automation and Remote Control, pp. 999-1007, June 1966.

174. Shimanov, S. N. "Instability of Motion of Systems with Time Lag," Applied Math. and Mech., Vol. 24, No. 1, pp. 70-81, 1960.

175. Shimanov, S. N. "The Theory of Linear Differential Equations with Periodic Coefficients and Time Lag," Applied Math. and Mech., Vol. 27, No. 3, 1963.

176. Shimemura, E., Y. Yoshida, K. Kawamura and Y. Komatsu. "Optimal Control of Linear Systems with Time Delay," J. Soc. Instrument and Control Engineers (Japan), Vol. 3, pp. 415-421, June 1964.

177. Shimemura, E. and Y. Komatsu. "Optimal Problems in Systems with Retarded Control," Bulletin Sci. Eng'g. Res. Lab., Waseda University, No. 28, pp. 23-25, September 1964.

178. Simpson, R. S. and R. C. Houts. "A Definition of Average Time Delay for a Linear System," Proc. of IEEE (letters), pp. 1733-1734, October 1967.

179. Soliman, J. I. and H. Kwoh. "A Frequence Stability Criterion for a Class of Non-Linear Sample-Data System with Pure Delay," Int'l. J. Control, Vol. 7, No. 6, pp. 579-589, 1968.

180. Strakhov, V. P. "Analysis of Digital Time-Lag Servo Systems," Automation and Remote Control, pp. 1119-1125, August 1964.

181. Tahim, G. S. "Optimum Control of Linear Systems with Time Lag," Coordinated Science Lab., Report R-242, University of Illinois, Urbana, Illinois, January 1965.

182. Tahim, G. S. "Controllability of Linear Systems with Time Lag," Proc. 3rd Annual Allerton Conf. on Circuit System and Theory, pp. 346-352, Urbana, Illinois, October 1965.

183. Tahim, G. S. "The Problem of Luré in Systems with Time Lag," Proc. 5th Annual Allerton Conf. on Circuit System and Theory, pp. 259-262, Urbana, Illinois, October 1967.

184. Tahim, G. S. "On the Approximation of a System with Delay by an Ordinary Differential System," IEEE Trans. on Automatic Control (Correspondence), Vol. AC-12, pp. 794-795, December 1967.

185. Tait, K. E. and R. B. Stanton. "The Inter-Relation of Sampling and Transport Lag in Determining Control System Stability," Int'l. J. Control, Vol. 5, No. 2, pp. 97-122, 1967.

186. Tal, J. "Low Sensitivity Design of Systems with Time Lag," M. S. Thesis, University of Minnesota, 1969.

187. Tal, J. and S. J. Kahne. "Design of Time Lag Systems with Sensitivity Constraints," Proc. JACC, pp. 459-462, 1969.

188. Teverovskii, V. I. "Periodic Operating Mode of Relay Systems with Variable 'Pure' Lags," Automation and Remote Control, pp. 73-79, January 1966.

189. Thompson, W. M. "Force-Reflecting Servomechanisms with Signal Transmission Time Delay," Ph.D. thesis, Illinois Institute of Technology, 1967.

190. Thompson, W. M., A. G. Vacroux and C. H. Hoffman. "Application of Pontryagin's Time Lag Stability Criterion to Force-Reflecting Servomechanisms," Proc. JACC, pp. 432-443, 1968.

191. Tomlinson, G. H. and M. J. Sommerville. "Low Pass Approximations to a Time Delay Characteristic," Journal of Electronics and Control, Vol. 15, No. 5, pp. 495-512, 1963.

192. Vasil'eva, N. P. and I. Gashkovits. "Conditions for Exact Realization of Sequential Functions by Various Sets of Actual Logic Elements, Account Being Taken of Lags," Automation and Remote Control, pp. 1535-1545, September 1965.

193. Venkatesh, Y. V. and B. L. Deekshatulu. "Analysis of Time Delay Systems," Int'l. J. Control, Vol. 4, No. 4, pp. 337-356, 1966.

194. Voland, J. "On the Linear Slope Delay Approximation," Proc. IEEE (letters), pp. 2059-2060, November 1967.

195. Voland, J. "Addendum to 'On the Linear Slope Delay Approximation,'" Proc. IEEE (letters), pp. 748-750, April 1968.

196. Voland, J. "A Further Note on the Linear Slope Delay Approximation," Proc. IEEE (letters), pp. 1356-1357, August 1968.

197. Walker, J. A. "Stability of Feedback Systems Involving Time Delays and a Time Varying Nonlinearity," Int'l. J. Control, Vol. 6, No. 4, pp. 365-372, 1967.

198. Wang, P. K. C. "Asymptotic Stability of a Time-Delayed Diffusion System," J. Appl. Mech. (ASME), Vol. 30, Series E, No. 4, pp. 500-504, 1963.

199. Wang, P. K. C. "Optimum Control of Distributed Parameter Systems with Time Delays," IEEE Trans. on Automatic Control, Vol. AC-9, pp. 13-22, January 1964.

200. Wang, P. K. C. "On the Almost Sure Stability of Linear Time-Lag Systems with Stochastic Parameters," Int'l. J. Control, Vol. 2, No. 5, pp. 433-440, 1965.

201. Wang, P. K. C. and M. L. Bandy. "Stability of Distributed Parameter Processes with Time Delays," Journal of Electronics and Control, Vol. 15, No. 4, pp. 343-362, 1963.

202. Wells, W. R. and Y. Kashiwagi. "A Time Optimal Control Study of a Second Order Linear System with Delay," Proc. JACC, pp. 644-649, 1968.

203. Weiss, L. "On the Controllability of Delay-Differential Systems," Princeton Conference on Information Sciences and Systems, Princeton, N. J., March 1967.

204. Weiss, L. "On the Controllability of Delay-Differential Systems," SIAM J. Control, pp. 575-587, November 1967.

205. Weiss, L. "New Aspects and Results in the Theory of Controllability," Proc. JACC, pp. 453-456, 1969.

206. Weiss, L. "Lectures on Controllability and Observability," C. I. M. E. Seminar on Controllability and Observability, pp. 205-289, Rome: Edizioni Cremonese, 1969.

207. Weiss, L. "An Algebraic Criterion for Controllability of Linear Systems with Time Delay," IEEE Trans. on Automatic Control (Short Papers), Vol. AC-15, pp. 443-444, August 1970.

208. Weiss. R. "Transportation Lag--An Annotated Bibliography," IRE Trans. on Automatic Control, pp. 56-64, May 1959.

209. Westdal, J. A. S. and W. H. Lehm. "Optimal Control for Systems which Include Pure Delays," Int'l. J. Control, Vol. 11, No. 4, pp. 599-610, April 1970. See also Correspondence Int'l. J. Control, Vol. 13, No. 1, pp. 201-203.

210. Wierzbicki, A. "Maximum Principle for Processes with Non-Trivial Delay of the Control," Automation and Remote Control, pp. 1543-1549, October 1970.

211. Yuan-Xun, Qin, Liow Iong-Qing and Uang Lian. "Effect of Time Lags on Stability of Dynamical Systems," Proc. 1st IFAC Congress (Moscow), pp. 26-32, 1960.

212. Zhivoglyadov, V. P. "Optimal Dual Control of Plants with Pure Delay," Automation and Remote Control, pp. 52-63, January 1964.

213. Zubov, W. I. "On the Theory of Linear Stationary Systems with Lagging Argument," Reports from Institutes of Higher Education, Math., No. 6 (7), pp. 86-95, (Russian), 1958.