Final Report to the

National Aeronautics and Space Administration

Manned Spacecraft Center

Houston, Texas

Research Contract NAS 9-7282

Development of an Electrode-Amplifier-Harness System for Physiological Data Acquisition

N72-70020 (NASA-CR-108401) DEVELOPMENT OF AN ELECTRODE AMPLIFIER HARNESS SYSTEM FOR PHYSIOLOGICAL DATA ACQUISITION Final Report W.R. Adey (California Univ.) 21 Apr. 1969 25 p

Unclas 12661 00/99

W. R. Adey, M.D.

Professor of Anatomy and Physiology

Space Biology Laboratory

Brain Research Institute

University of California, Los Angeles

April 21, 1969

NASA CR 108401

Development of an Electrode-Amplifier-Harness System for Physiological Data Acquisition

I. Introduction: Rationale for central nervous monitoring harness

With the advance of space programs toward increased periods of man's exposure to a weightless environment, and undersea exploration under greater atmospheric pressure, detailed and accurate physiological monitoring will be a necessity. New approaches are needed in bio-instrumentation if physiological data of sufficient quality and quantity for appropriate analysis are to be obtained from human subjects working under these severe environmental stresses. Previous manned space flights have produced a considerable body of practical knowledge in monitoring of physiological functions. This knowledge has been applied to the development of an electrode-amplifier-harness system for physiological data acquisition from physically active subjects on a non-interference basis under contract NAS 9-7282. Of prime importance are the electrophysiological parameters obtained from the brain and the heart. Both organs are vital to the function of the individual, and are extremely sensitive in responding to changes in demands imposed by the body and mind. When coupled with other physiological signals, such as those from eye movements and electrical activity of suitable muscle groups, they provide a quite substantial overview of the psychophysiological status of the astronaut or aquanaut. These are of interest both as an immediate objective and also because of their fundamental importance to such phenomena as the integration of vestibular, proprioceptive and visual cues in orienting in the 1-G environment, and in evaluating alterations in diurnal and circadian rhythms. A clear need to monitor these states is indicated by the findings during the

short EEG recording period in the flight of Gemini 7. EEG, EOG, EMG, and temporal arterial blood pressure are physiological parameters that have been utilized in assessment of physiological state, but are usually obtained with constraints imposed by sensing and transducing methods currently available.

Current methods have limitations in at least one of the following areas: the retention of electrodes on the skin surface of a physically active subject, the electrodes being uncomfortable because of size or methods of attachment, short term usefulness, and/or tedious application procedures. To ensure that the highest quality data will be obtained, the sensor should be as simple to apply and comfortable to use as possible without compromising the quality of the data. The primary problem lies in the attachment of sensing electrodes. From several types of skin contact electrodes now available, the choice rests essentially on suitability for incorporation into a usable system. For the EEG and EOG, such a system should involve head gear requiring no more than one to two minutes to place on the head, be comfortable to wear for long periods in a weightless environment, and have no excessive pressure points or cause restraint in head movement except for umbilical cord wires if radiotelemetry is not used. No special preparations should be required except for application of an electrode gel in minimal amounts, and no adjustments should be needed after placing the headgear on the head.

II. General system description

a. The electrode cap

The headgear developed in this study is a tailored cap made of four panels of lycra material with a foam rubber padded chin strap.

At the back the outline of the cap allows for one inch separation of the EMG electrodes over the trapezius muscles, and close placement of the EOG electrodes at the outer canthus of the eyes. The ear holes are large enough to accommodate any sized ear, and also take account of differing ear locations. The flight caps should be fitted to the individual user and the electrode sites determined by the investigators at the time of fitting, using the international 10-20 EEG electrode system.

b. Electrodes and signal conditioners

The electrodes are connected by pairs to six pre-amplifiers which are either integral with the electrodes or mounted on the cap adjacent to them. These amplifiers each have a gain of approximately 3000, and are connected as differential pairs. The EEG amplifiers are housed in a lucite box and stitched onto the cap close to the electrodes. It is anticipated that smaller differential amplifiers can be developed than those used on the prototype cap. The amplifiers must be as small as possible to reduce excess mass on the cap. This aids in reducing movement of the cap relative to the head. The output is recorded on seven-channel tape within the spacecraft. The electrode must be capable not only of recording without movement artifacts, but must also be compatible with the physical requirements of the astronaut's comfort and ability to perform his required functions. The electrode-amplifier system should provide millivolt signal output at low impedance, require minimal preparation, be mechanically and electrically stable, and be easily replaced for renovation or in the event of failure. The principle problem in recording low level bioelectrical potentials by skin contact lies in the electrode used to sense the potentials. The electrode used is a compressed silver/silver chloride pellet housed in

a lucite form which snaps into the electrode holder in the cap. It does not require adhesive contact to skin or hair. This electrode pellet is essentially non-polarizable with a 5 to 125 microvolt bias potential, and exhibits a drift of less than 16 microvolts in a 24 hour period. It has been proved electrically and chemically compatible with physiological solutions, such as Ringer's solution or normal saline, whereas solid metal electrodes are not.

Since EEG, EMG, and EOG signals are not only low level, but also derived from high impedance sources, they are extremely susceptible to sources of electrostatic and electromagnetic interference. In order to achieve an early signal transformation to a high level, low impedance signal, it is necessary to incorporate an amplifier at or near the electrodes. Where radiotelemetry is not employed, the high signal levels available from the boost amplifiers make long cable runs feasible, but the number of cables may introduce an unnecessary encumbrance and restriction in range of movement. It is is important, therefore, to consider a local radiotelemetering system for the transmission of data from the astronaut to the vehicle data acquisition system. In view of the ability of the astronaut to maneuver away from the vehicle, and the plans for completely untethered egress as well as the exploration of the moon surface, it seems even more imperative that study of radiotelemetry of local data transmission begin now.

c. The sponge

The inner diameter of the electrode housing is designed to correspond to the diameter of the sponge holder in such a way that the two fit snugly. This sponge, filled with an electrolyte gel, makes contact with the skin. The height of the sponge holder is 1/16" shorter than the depth of the cavity to assure no contact between the sponge and the Ag/AgCl

pellet, thus eliminating any interference with the signal pick-up by the pellet due to movement of the sponge. The base of the sponge and lip of the holder are covered with a sealant to decrease drying of the gel by minimizing surface area of the sponge exposed to air, and also to strengthen the bond between the sponge and the sponge holder. The cone-shaped sponge facilitates the penetration of the sponge through the hair to make contact with the skin and to damp movement artifact. The only manipulation required of the astronaut besides putting on the cap is filling the sponge with gel.

The remaining movement artifacts are attributable to movement of the sponge-electrolyte surface relative to the hair and scalp. These artifacts seem to arise from disturbances in the half cell potential which exist at the interface between the skin and electrolyte.

It may be feasible to find an electrolyte having an appropriate concentration of ions or type of ions that will minimize standing potentials at the interface. Our continuing studies seek such an electrolyte; if unsuccessful, a new sponge configuration will be proposed. The appended Figure 1 shows in section a sponge which shows promise in preliminary tests. The basic feature of this sponge is that the contacting end of the sponge (A) is retained in place by a circular comb (B) which is enmeshed in the hair or simply grips the scalp. Movements in the fabric will certainly move the flange (D) but if the sponge section (C) is sufficiently compliant, small movements will not disturb the contact point at (A). The teeth on the comb may have different lengths to accommodate differences in hair thickness. The width of flange (D) can be adjusted to provide maximum comfort with minimum interference between electrodes. It may, in fact, be possible to mold a thick sponge rubber cap with depressions at the electrode

locations which can accept the electrode. Such a configuration, however, may be more restricted in the range of head sizes it can accommodate.

Since the potentials are measured through the skin, it is necessary to establish an electrically sound connection from the electrode to the usually dry skin. The usual way to establish this contact is through the use of electrically conductive solutions, pastes, or powders. The gel now used is made from a physiological salt solution, by a slight adjustment of the salt composition of MEM's solution (Minimum Essential Medium (Eagle, H. : Science 130:432-437, 1959)), with addition of two gelling agents and an antiseptic. Physiological solutions do not usually offer a compatible interface with metal surfaces since they do not contain sufficiently high concentrations of active metal ions to minimize contact potentials; however, with the Ag/AgCl pellet, excess ions are available from the pellet at the interface so that movement of the fluid does not produce an appreciable change in the concentration. The gel leaves a minimal scalp residue on removal of the cap and provides long term operation without interim manipulation.

d. Temporal artery blood pressure transducer

A blood pressure transducer has been incorporated into the EAH system to sense relative blood pressure and heart rate. The transducer is relatively free from movement artifacts and gives consistent recordings without baseline shift. It has sufficient sensitivity to show transient changes in systolic blood pressure, an adequate frequency response (0.1 to 200 Hz) to identify the diastolic notch, and an output signal at low impedance sufficient to drive normal signal conditioning equipment. The transducer is completely dry and utilizes

a deposited semiconductor strain gauge element which produces 0.5 mV signal with a 3V bridge drive. The retaining pressure appears small enough to ensure astronaut acceptance. No pulsations sensible to the finger tips were present at pressures necessary to produce a usable signal. The transducer and bridge supply are completely self-contained so that it can be conveniently used with any kind of moderately sensitive recorder. On the astronauts, the holder for the transducer, identical with the electrode holders, will be located for each individual, since placement must be within 1.0 cm for reliable results.

e. Accelerometer and microphone units

An accelerometer channel provides information about movement of the astronaut and/or of the spacecraft, and a microphone is located frontally in the midline. The total system will be useful in acquisition of data during many phases of astronaut training in obtaining preflight baseline and control data.

f. Spacecraft interfaces and astronaut requirements

Modifications to the space vehicle require installation of a cable connector, or radio receiver if telemetry is used. The final weight and volume, one pound and 12 cubic inches, is the specification for the prototype but the flight item will probably be lighter and smaller with miniaturization of amplifiers and electrodes.

Since the cap will be used in shirt sleeve environments, no modifications of space suits will be necessary, no preflight access to the spacecraft is anticipated, and the utility of the system will not be limited by such factors as flight duration, orbit or trajectory. The criteria for use of this system will be determined by the epochs of astronaut time available for recording the parameters during any

specific flight. Astronaut time required for helmet preparation will be on the order of one to five minutes for each recording period. The experimental procedures include only the application of a helmet system to the head. This would be equivalent to donning a swimming cap with a chin strap. The connecting cables are completed by the insertion of a single connector into an appropriate socket, or if telemetry is used, activating the power source and the receiver. All these instrumental manipulations will be performed at the time of use only, for once initiated, recordings are continuous and the astronaut is free to perform any function. The power requirements for the EAH system are ± 6V at 2 ma for the preamplifiers, 5V for the blood pressure transducer, and 5 amperes at 28 volts from spacecraft power for the tape recorder. It will be necessary to design hardware to accomplish the data handling proposed.

III. Data Analysis Methods

In addition to data acquisition, this laboratory has also developed methods of EEG analysis. These studies have led to analysis methods, utilizing large scale digital computation, which can accurately evaluate the state of the subject based on selection of EEG parameters derived from a small data sample. The insidious development of cumulative changes, such as fatigue or defective attention, have been investigated by use of the EEG. It has been shown that subjects engaged in a moderately stressful task, such as driving a car in traffic, will begin to show more and more bursts of alpha activity in the EEG as an index of decreased vigilance. We have also demonstrated loose and consistent correlates of the scalp EEG with decision-making and responses to psychological stress. These evaluation methods have been developed in this laboratory and represent a distinct increment in the state of

EEG analysis by use of pattern recognition techniques. The use of EEG has also resulted in a far more precise quantitation of sleep processes than is possible by other methods. It cannot be assumed that sleep requirements will continue to be met in the highly artificial and artifactual environment of space. Analysis of the EEG recorded in space may give new insights into sleep and fatigue on earth. The successful development of such a monitoring system will also have an impact in clinical studies and in problems of occupational health.

IV. Detailed engineering specifications of electrode-amplifier-harness

a. Cap construction

The caps have been made by Alice Chatham, 5043 Onaknoll, Los Angeles 90043 ((213)292-3680) using the patterns enclosed. We found that this cut made a very good fit and allows adjustment for individual fitting. The sizes of the caps are determined by the three anthropomorphic heads made by Sierra Engineering, 123 E Montecito, Sierra Madre, California ((213) 681-1141). Mr. Arthur of Sierra Engineering used data collected from a sampling of Air Force personnel at Wright-Patterson Field, Dayton, Ohio, by H.T.E. Hertzburg, anthropologist. The small head is the five percentile of the sample. The mean or 50 percentile is the medium-sized head, and the large head is 95%, 100% being the largest. We have found that these three sizes are sufficient to fit several different head sizes and shapes because of the stretch in the material, and because the cap does not fit closely to the head due to the sponges. The material is lycra power knit #441-1 made by Rayflex Fabric, Inc. and ordered through Alexander Puglia and Co., 1033 S. Los Angeles Street, Los Angeles, 90015 ((213)747-6153. The material composition is 26% 420 Spandex denier, and 74% nylon, 50 stitch

at a width of 63" to 64". Elongation is 130% by 85%. Some fluctuations occur in the electrode placements from one individual to another; however, these are minimal and do not affect the comparative values of the readings because the distance is constant between the electrode pairs. The strap was initially a one-ince wide gros-grain ribbon with Velcro to attach it to the cap, making the fitting adjustable on both sides. This strap proved uncomfortable and was replaced by a foam rubber padded wire mesh frame cut to the contour of the neck as follows:

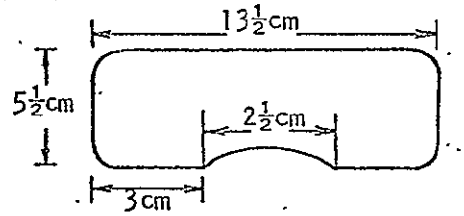

This strap form, also attached with Velcro was found more comfortable.

b. Electrode placement in the cap

The astronauts will have caps individually fitted and the placement of the electrodes will be determined for each individual, using the 10-20 electrode system of the International Federation as described by H.H. Jasper. The blank cap is placed on the astronaut's head and marked for the placements of the electrodes. In fitting the cap, electrode placements must be consistent with this 10-20 scheme and, more importantly, for transducer placement. Holes 0.5 inch in diameter are cut at each placement. Ten grams of Dow Corning Silastic 382 Medical Grade Elastomer is mixed with five to ten drops of its catalyst in a teflon watch glass. The mixed elastomer is put into the top and bottom of the electrode holder mold separately, with the center post in the bottom part. The bottom part is placed under the material with the center post in the hole in the material, making sure the material is over the largest part of the center post. The top part of the mold filled with the Elastomer

is put onto the center post and the two squeezed together. The mold may be clamped together with a C-clamp until curing, about fifteen minutes. The mold is removed and the excess Elastomer is trimmed away. The lucite mold works well with the Elastomer as long as its surface is kept clean, no releasing agent being necessary. All the lucite molds and housings mentioned here are made by H. Tillson, Mechanical Development, Space Biology Lab. The electrodes are paired as follows, using the 10-20 symbols: left and right outer canthis, T3 to F3, C4 to O2, P3 to O1, F4 to C4, and EMG (placed below the superior nuchal crest near the insertion of the trapezius muscle). These pairs are connected to six amplifiers of a gain of ~3000 and the signals, with the other parameters, are recorded on a seven-channel tape recorder within the capsule.

c. Electrode construction

The electrode is a compressed silver/silver chloride pellet, 4.0 mm diameter by 2 mm thick, with a 5 mm silver wire, made by John Kater of Bionetics, Inc. The lucite housing has dimensions at the top of the housing which mate to the dimensions of the Ag/AgCl pellet so that the pellet fits tightly, with the silver wire through the hole at the top of the housing. Microdot cable #250-3838 is used to make the connection between the Ag/AgCl pellet and amplifier. The cable is stripped down to the solid inner conductor. About 0.1 inch of the black covering of the inner wire should be left exposed. The cable is slipped through the lucite housing and the silver wire of the pellet soldered to the exposed inner wire. The pellet is then fitted into place in the holder and the cable bent to fit into the groove on top of the lucite housing. Scotchcast #8 resin is mixed according to manufacturer's specifications

(1:1) and heated in an oven at 50 to 65° Centigrade for seven minutes. It is then applied, taking care to cover the solder joint and the cable in the groove and allowed to set overnight. The resin and the lucite, Plexiglas by Rohn and Haas of Philadelphia, provide the insulation for the signal pick-up area. Between the electrode and the amplifier Microdot coaxial connectors 31-34 and 32-23 are used to allow for changing and replacing electrodes or amplifiers. They are put on with a special Microdot tool #10-0003.

The inner diameter of the housing is designed to correspond to the diameter of the holder part of the sponge in such a way that the two fit snugly. The holder of the sponge, made of the same material as the electrode holder, Dow Corning Silastic 382 Medical Grade Elastomer is made first, mixing 215 grams with two to five drops of its catalyst. The elastomer is put into the mold so that no bubbles form on the surface of the mold. The plunger is pushed through and the mold allowed to set for ten minutes, or until the material is no longer tacky. The surface of the holder should not be handled any more than necessary for this interferes with the adhesion of the foam to the elastomer. Uncured elastomer is used as an adhesive between the elastomer holder and the sponge cone; however, Dow Corning Silastic Medical Adhesive Silicone Type A can be used instead. The sponge part is made by mixing 5.0 ml of Dow Corning Silastic RTVS-5370 with three drops of its catalyst and poured into the cone shaped mold. The holders covered with adhesive or uncured elastomer, in their holders are placed on top quickly. The foam sets in about ten minutes and should be gently removed from the mold. The excess is trimmed away. The foam has a tendency to stick to the lucite mold so a release agent, a 10% aqueous solution of Tergitol, is required periodically. About half of the base

of the sponge and the lip of the holder are covered with General Electric RTV-112 and allowed to set overnight. The G.E. sealant stengthens the bond between the sponge and the sponge holder, and also eliminates surface area of the sponge exposed to air to decrease drying of the gel.

d. Electrolyte solution

The gel is made up of a physiological salt solution, two gelling agents, and an antiseptic. The salt solution is a slight adjustment of the salt composition of MEM's solution, which was dropping $CaCl_2$ and changing $NaHCO_3$ to KH_2PO_4, to increase the buffering action because the gel is in contact with the air. The complete composition is as follows:

chemical	mg/liter
NaCl	6800
KCl	400
$MgCl_2 \cdot 6\ H_2O$	200
$NaH_2PO_4 \cdot H_2O$	1500
KH_2PO_4	10

The salt solution is made with the given concentrations in a 1.0 liter volumetric flask with 1.0 ml Zepharin chloride added. This solution is then poured out in 100 ml portions and heated on a hot plate at a temperature between 65 and 70° Centigrade with the magnetic stirrer on. 2.5 g of Natrosol are added and dissolved. Then 2.0 g PVP is added slowly, making sure that each part is completely wet. After all constituents are in solution, any globules are broken up. The solution is stirred and heated until clear, or until the magnetic stirrer no longer functions. It is then removed from the hot plate, covered, and allowed to set for 24 hours before using. One gelling agent is Natrosol 250, a nonionic water soluble cellulose ether made by Hercules Powder Company. Because of its water soluble properties, Natrosol is

easy to put into solution, and also easy to remove from hair. Polyvinylpyrrolidone (PVP), K-90 medical grade made by General Aniline and Film Corporation of New York, is used as a stabilizer of the Natrosol gel. As a preservative of the gel, the antiseptic Zephiran Chloride, made by Winthrop Labs, is added at a 1:1000 parts water ratio. Other physiological solutions being tested for half cell potentials and skin compatibility are Hanks' solution for an open system (Hanks, J.H. and Wallace, R.E. Proc. Soc. Exp. Biol. Med. 71: 196-200, 1949) and Phosphate Buffered Saline, which is independent of the environment (Dulbecco, R. and Vogt, M.: J. Exp. Med. 99:167-182, 1954).

e. Signal conditioner specifications

The EEG amplifiers are made by Wems, Inc., 4650 West Rosecrans Ave., Hawthorne, Calif. 90252 ((213)679-9181) according to our specifications. The gain is between 2000 to 10,000 (66 to 80 db) with an input impedance of approximately 200 K ohms at a low gain setting to 100 K ohms at maximum gain. The frequency response is uniform between 0.40 and 200 Hz, and the output impedance is 200 ohms. The common mode rejection is 80 db and input noise figures which depend on input transistor selection, are typically less than 1.0 microvolt RMS with a bandpass from 5 to 200 Hz. The power required is $\pm$ 6 volts at 2.0 ma from positive and negative supplies. Supply current varies with signal input, so that a low impedance supply is desirable to prevent crosstalk in multichannel applications. Supply voltage rejection ratio for the IC has a maximum of 100V/V; that is, 10^{-4} times the supply voltage variation appears at the input and may be confounded with input signal. The modules are placed in the lucite box with the right orientation to the holes and covered with Scotchcast #8 resin. The lead cables, of Microdot 250-3838 are stripped of the white outer cover and

and the shielding retracted to one side. The black plastic is stripped from the inner wire leaving 1/8 inch between the inner stripped wire and the shielding. The inner wire is soldered to B1 and B2 and the cable shielding to the signal ground. The Winchester sockets 2616 are cut, covered with shrink tubing, and inserted into the holes in the lucite housing. They are then soldered to the power supply inputs, module ground, and signal output. More resin covers the solder joints and holds the lid on the box. The modules are stitched onto the cap with the Winchester sockets toward the back of the head and the amplifier close to its electrode pair. Once the electrodes are in the cap and the modules stitched on, the length of the wires between the modules and the electrodes, and module to module can be determined. Winchester pins 2616 are soldered to the three wires in the Flexicable F203, made by Caltron Industries, 2015 Second Street, Berkeley, Calif. 94710. The ground is the white wire; +5.6 V, red wire; and -5.6 V, the black wire. The pin solder joints are covered with shrink tubing. The signal output cable is Microdot #260-3816 and is connected with a Winchester pin covered with shrink tubing, too. The Flexicable and the six signal output cables, and the transducer cable are braided together and put into a common ten pin plug that fits into the tape recorder. The individual specifications of the modules used are included. The two mastoid ground leads are connected to the amplifier ground wire and that soldered joint is covered with shrink tubing.

Summary of EEG signal conditioner specifications.

Dynamic ranges - 5μV to 300μV @ 0.5 cps to 50 cps
Signal to noise - 5μVp-p noise @ .5 cps to 50 cps @ 100KΩ
Thermal range - as required
Operational capability - indefinite period
Band pass -.015 cps to 50 cps
Input impedances - 1 meg Ω to 50 meg Ω
Output Z - 100 Ω to 1K Ω resistive @ 0.5 cps to 50 cps
DC input leakage current - less than 10^{-10} A
DC output offset - less than 1 mV ± 10μV over temperature range

f. Blood pressure transducer

The blood pressure transducer is made by General Technical Services, Inc., of Upper Darby, Pa. When placing the transducer into the electrode holder in the cap, care should be taken not to put pressure on the front end of the transducer as this could overstress the pressure sensitive element. The cable plug should then be mated with its socket on the control box with the coupling switch in the D.C. position, and the outputs connected to an appropriated recorder or oscilloscope. The power supply should then be turned on, producing a few millivolts D.C. offset on the recording device. The cap should then be placed on the head holding the transducer away to avoid excess pressure. With the cap on the head and the transducer located over the temporal artery, the D.C. output should be monitored to see that it does not exceed 20 mV. An acceptable offset value is between 10 to 18 mV. Two final adjustments are to move the transducer around until the maximum signal amplitude is found, and to decrease or increase the offset pressure until the signal amplitude is maximal. The average signal should be 1.0 to 2.0 millivolts for a blood pressure of 100 mg Hg. Once the final adjustments have been made, the output should be switched to the AC position, thus eliminating varying DC offsets introduced by changes in the head position of the wearer.

Definitive schedules for collecting data during task performance will be developed in relation to flight protocol.

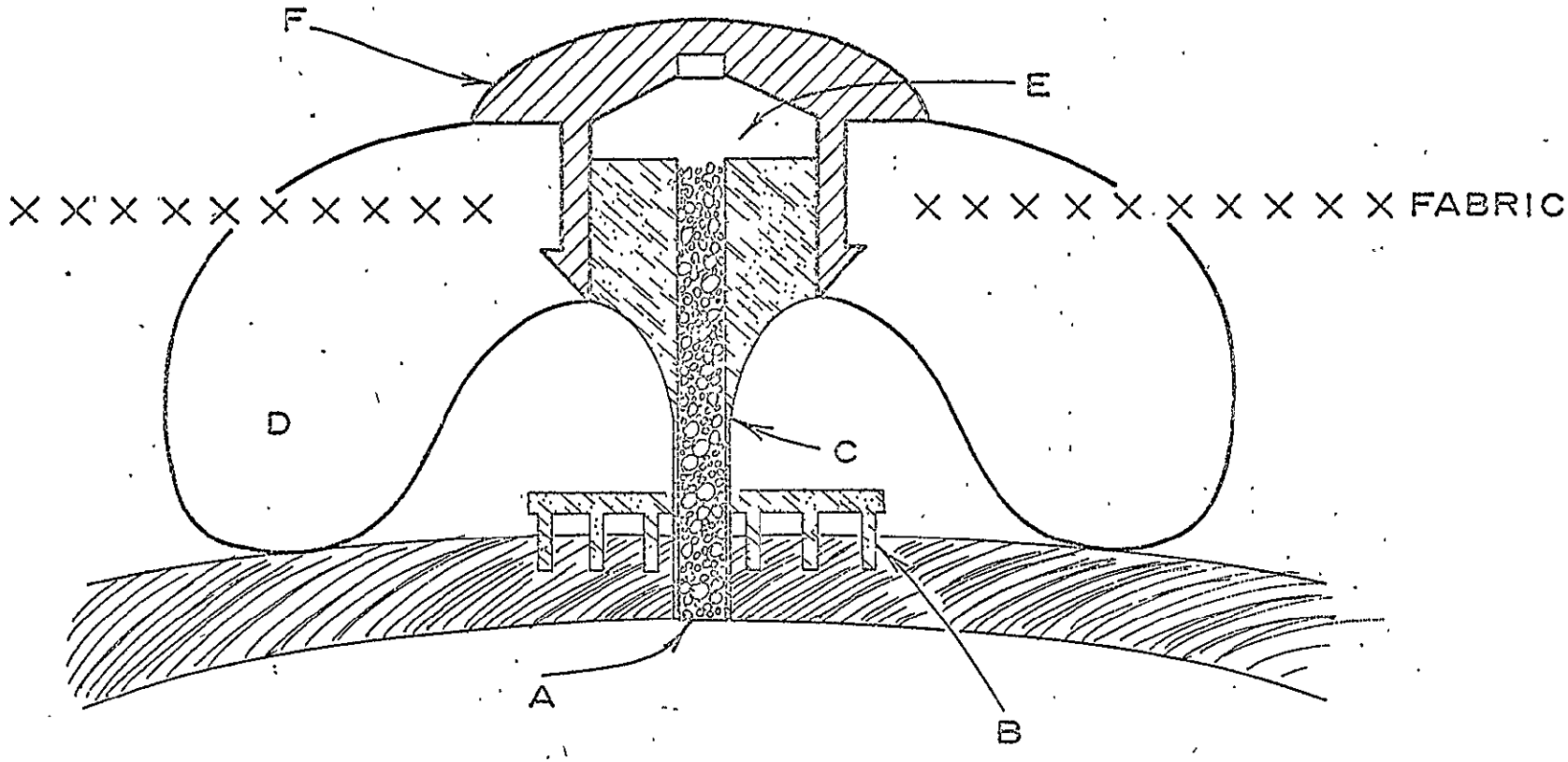

Figure 1

Appendix: Proposed flight system and spacecraft interfaces.

Since there are 8 channels of data desired and only 6 data channels available on the tape recorder, it is planned to combine 4 channels into 2. These 4 will be voice combined with pulse and EMG and EOG which will be combined. Of these the EMG and EOG combination is simply achieved by using two active filters, the outputs of which will be linearly summed and then transmitted to a tape recorder. EOG will be filtered in a passband from 0.5 to 20 cycles and EMG in a passband from 25 to 70 cycles. It is proposed to use integrated circuit differential amplifiers to accomplish the summing. Since the signals are all AC it should be possible to block DC drift which may occur with this type of operational amplifier.

The most complex of the combining operations will be in the voice compression and pulse. It is proposed in the voice compression to filter the output of the microphone amplifier into 3 bands. These are 200-400 Hz, 400-800 Hz and 800-1600 Hz. The output of the filters will be amplified, rectified and smoothed using and RC circuit. The smoothed output for the filter is then used to amplitude modulate a 4 cycle, 7 cycle, or 13 cycle sinusoidal signal depending on the passband. The 4 Hz signal corresponds to 200-400 Hz, 7 Hz to 400-800 Hz, 13 Hz to 800-1600 Hz. The 3 amplitude modulated low frequency signals are then linearly added and outputed to a second adder.

The pulse signal from the transducer will be amplified and applied to two different circuits. The systolic pulse will be differentiated and run into a Schmitt trigger, which drives a one shot which produces a 100 millisecond pulse. The output of the one shot is lead then into a gate. The output from the transducer amplifier also is applied to a peak detector which is sensing the peak amplitude of the systolic wave.

The output from the peak detector essentially is a continuously updated voltage level. This slowly varying voltage is used to modulate a VCO operated in the frequency range from 50-100 Hz. The output of the VCO is applied to the gate and partially shunted around the gate. The output from the gate then would be a continuous sinusoidal signal which is periodically being augmented in amplitude by the pulse. Therefore, the output of the pulse signal conditioner will be a continuous sine wave which changes in frequency according to the magnitude of the systolic wave and periodically increases in amplitude according to the occurrence of the pulse. Since the important information is now converted into the frequency domain the amplitudes may be adjusted to be constant. Since the pulse information is in the frequency range from 50-100 Hz it can now be combined with the output of the voice compression unit to occupy one channel of the tape recorder. The frequency ranges of interest then would be from 4-13 Hz for the voice compression and 50-100 Hz for the pulse and pressure information.

The total bandpass of this channel of the tape recorder is not being utilized since there is a band from approximately 20 Hz to 50 Hz which is available for recording other information. It is suggested that two accelerometers can be incorporated to utilize this band. One at center frequency of about 25 Hz and another at a center frequency of about 40 Hz. These two carriers will be amplitude modulated according to the amplitude of the accelerations. In this way, changes in acceleration of the head of the subject and of the vehicle will be recorded. It will be necessary to have independent means of recording the capsule accelerations because it is not planned by the spacecraft people to monitor and record each thrustor operation.

Tape channel 5 will therefore be very busy with so many different

parameters, however, if the signals are kept pure as sine waves there should be no intermodulation distortion and the various parameters can then be separated again by simple filtering techniques. It is proposed, for example, that the voice data instead of being converted back into its original frequency components simply be analyzed using the spectral analysis program. The same can be applied to the blood pressure information. Heart rate, however, will need to be separated and reshaped into pulses so that the intervals can be counted.

The attached illustrations present graphically the preceding descriptive material in this Appendix.

EMG - EOG Combination

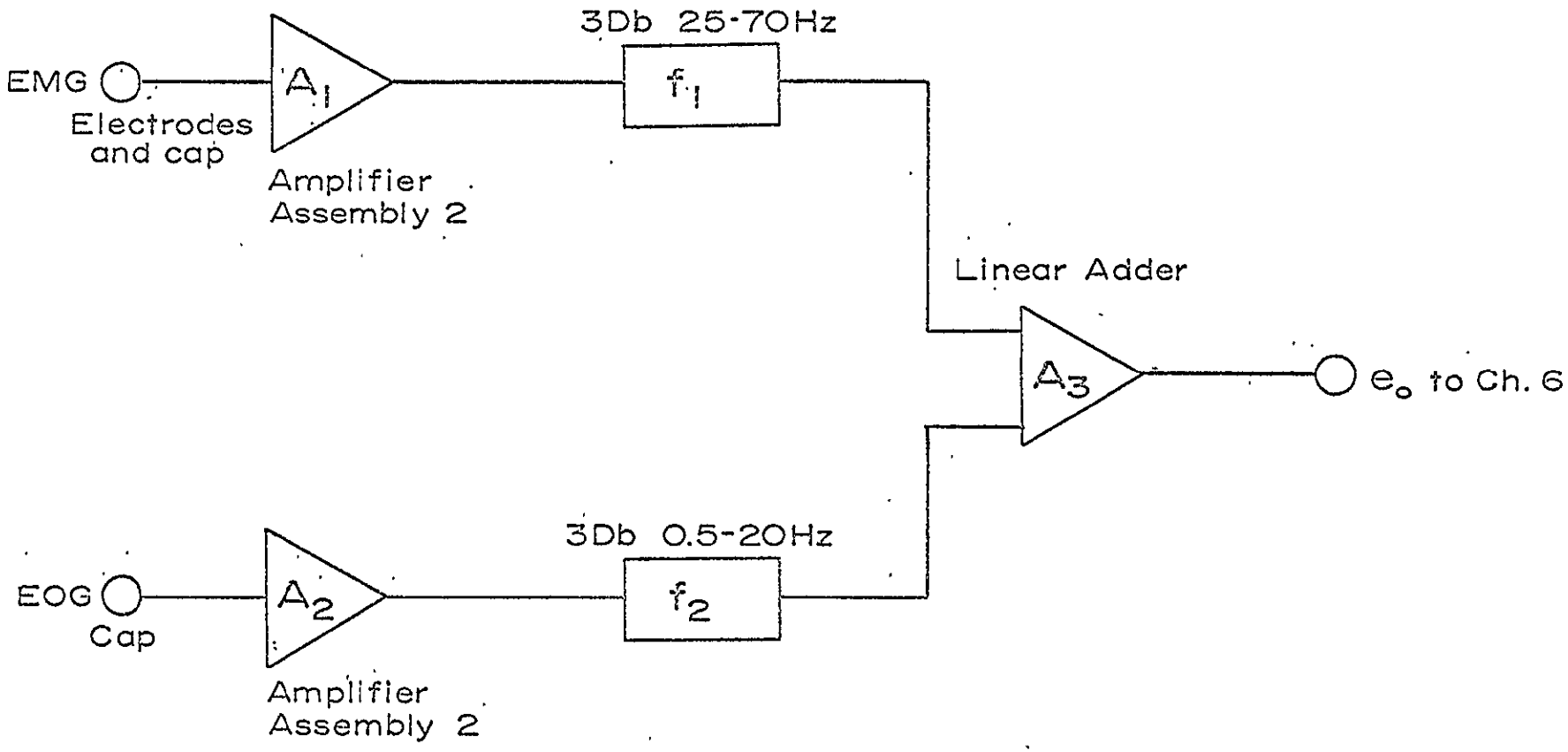

f_1 and f_2 are active filters, 6 Db/octave roll off. min.

Voice Frequency Compression Tape Channel 5

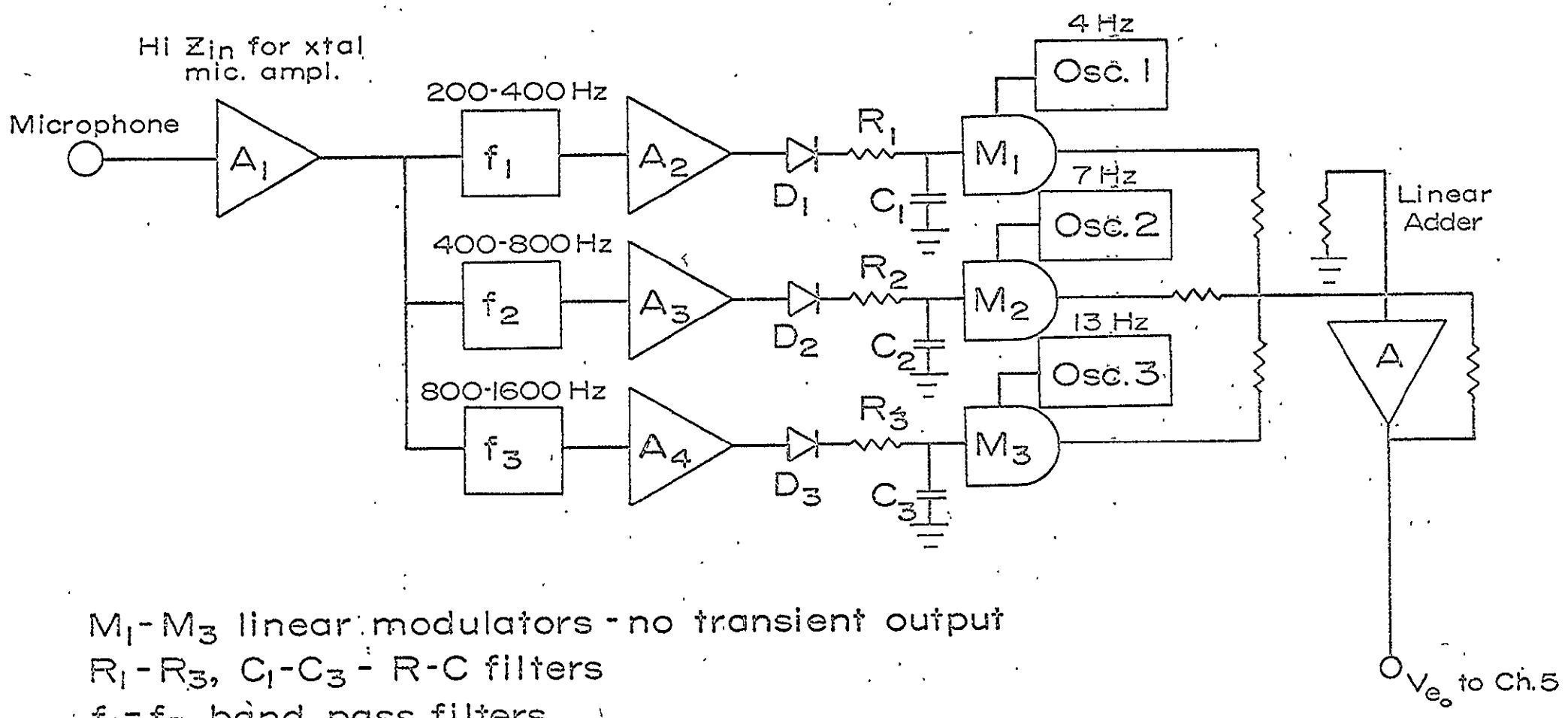

M_1-M_3 linear modulators - no transient output
R_1-R_3, C_1-C_3 - R-C filters
f_1-f_3 band pass filters
Microphone, high sensitivity xtal or dynamic

4 Hz, 7 Hz, 13 Hz
Amplitude modulator
low intermod.
distortion

Pulse Converter Tape Channel 5

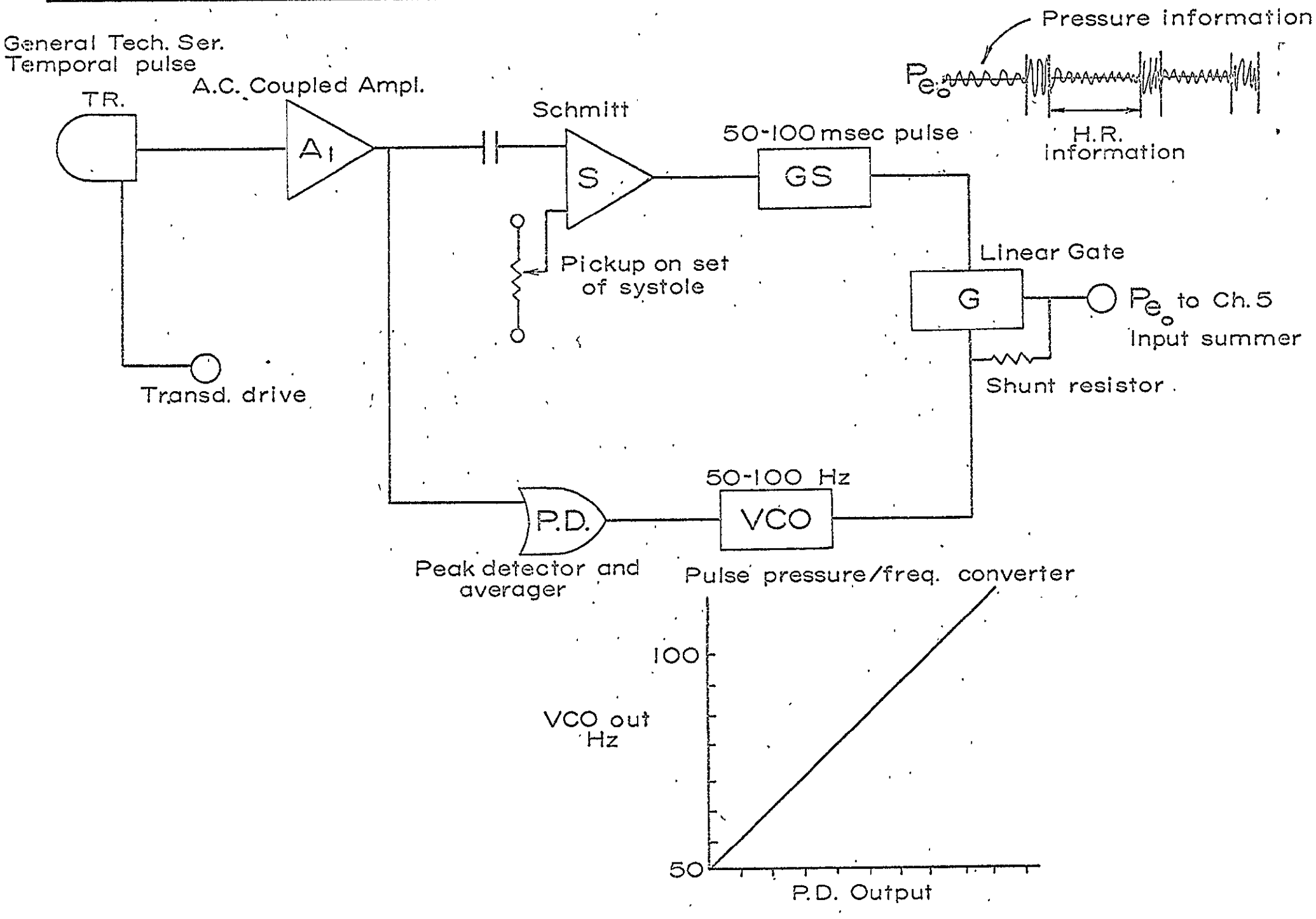

Accelerometer Channels Tape Channel 5

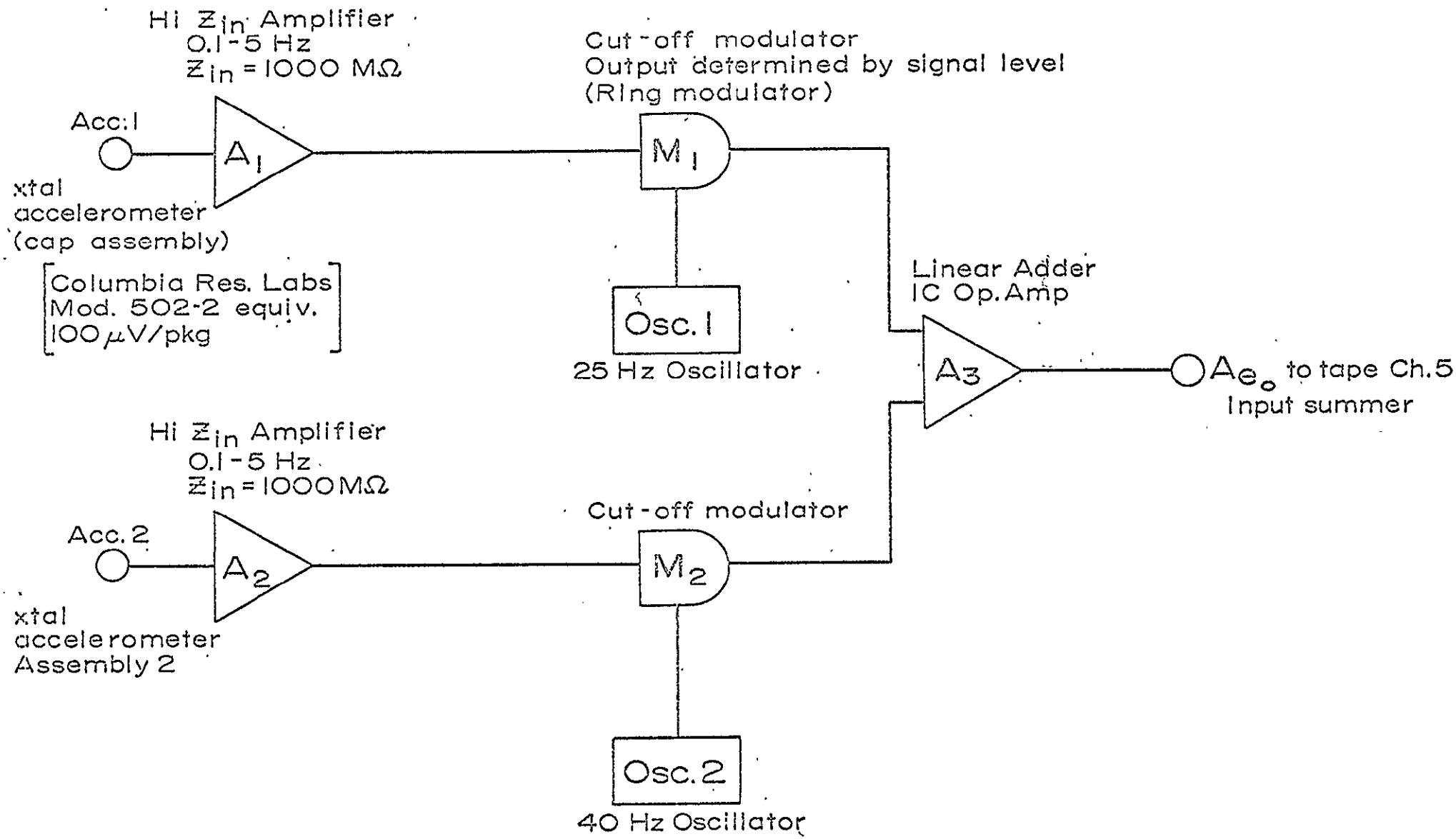
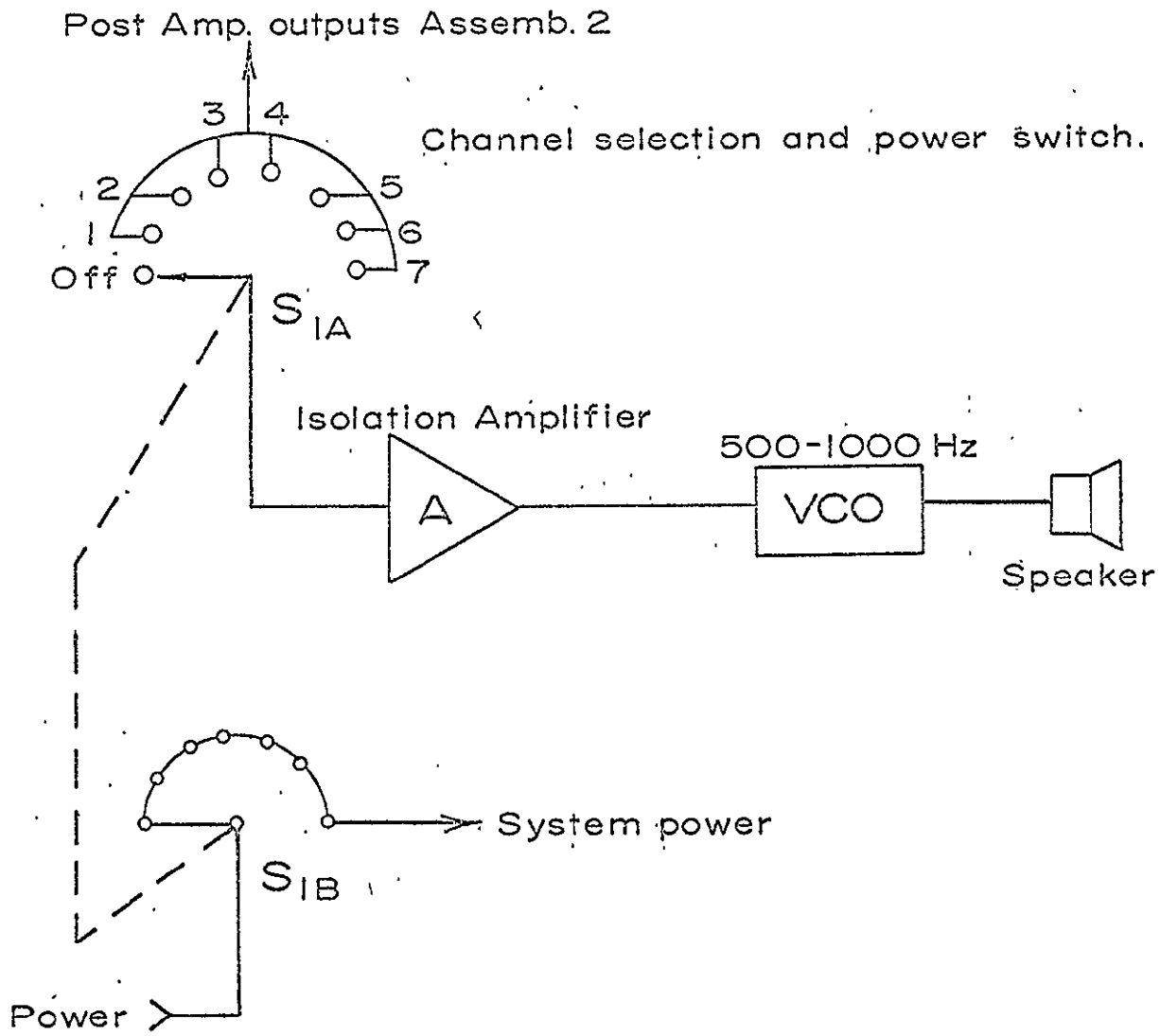
Tape Input Monitor in Assembly 4