NASA CONTRACTOR REPORT

N73-16909
NASA CR-2136

NASA CR-2136

CASE FILE COPY

FATIGUE EVALUATION OF COMPOSITE-REINFORCED, INTEGRALLY STIFFENED METAL PANELS - SUMMARY

by C. E. Dumesnil

Prepared by
VOUGHT AERONAUTICS COMPANY
Dallas, Texas
for Langley Research Center

NATIONAL AERONAUTICS AND SPACE ADMINISTRATION • WASHINGTON, D. C. • FEBRUARY 1973

1. Report No.	2. Government Accession No.	3. Recipient's Catalog No.
NASA CR-2136		

4. Title and Subtitle	5. Report Date
FATIGUE EVALUATION OF COMPOSITE-REINFORCED, INTEGRALLY STIFFENED METAL PANELS--SUMMARY	February 1973
	6. Performing Organization Code
7. Author(s)	8. Performing Organization Report No.
C. E. Dumesnil	
9. Performing Organization Name and Address	10. Work Unit No.
Vought Aeronautics Company Dallas, Texas	737-54-12-04-23
	11. Contract or Grant No.
	NAS1-10871
12. Sponsoring Agency Name and Address	13. Type of Report and Period Covered
National Aeronautics and Space Administration Washington, D.C. 20546	Contractor Report
	14. Sponsoring Agency Code

15. Supplementary Notes

This report summarizes material presented in NASA CR-112148

16. Abstract

The fatigue and fail-safe behavior of composite-reinforced, integrally stiffened metal panels was investigated. Test results consisting of conventional fatigue lives, fatigue-crack-propagation rates, and residual static strength are presented and discussed.

17. Key Words (Suggested by Author(s))	18. Distribution Statement
Integrally stiffened panel Composite reinforcement Fatigue Crack propagation Residual static strength Testing	Unclassified - Unlimited

19. Security Classif. (of this report)	20. Security Classif. (of this page)	21. No. of Pages	22. Price*
Unclassified	Unclassified	31	$3.00

*For sale by the National Technical Information Service, Springfield, Virginia 22151

TABLE OF CONTENTS

	Page No.
SUMMARY	1
INTRODUCTION	3
SYMBOLS	5
DESIGN CRITERIA	7
TEST SPECIMENS	9
Fatigue Coupons	9
Composite-Reinforced Panels	9
TEST PROCEDURE	11
RESULTS AND DISCUSSION	13
Coupon Fatigue Tests	13
Composite-Reinforced Panel Tests	13
CONCLUSIONS	15
APPENDIX - Conversion of U. S. Customary Units to SI Units	17
REFERENCES	19

FATIGUE EVALUATION OF COMPOSITE-REINFORCED, INTEGRALLY STIFFENED METAL PANELS - SUMMARY

By C. E. Dumesnil
Vought Aeronautics Company

SUMMARY

This summary report gives the salient results of an investigation of the fatigue and fail-safe behavior of composite-reinforced, integrally stiffened metal panels. The test methods, fabrication procedures, material descriptions, and complete test results are given in reference 1.

The panels were made by introducing unidirectional composite material between the aluminum face sheets of an integrally formed, stiffened panel. Both graphite/epoxy and S-glass/epoxy composites with an elevated-temperature-cure adhesive were used; some additional graphite/epoxy panels were made with a room-temperature-cure adhesive to determine the effects of residual thermal stresses. The panels were tested at various stress levels with constant-amplitude fatigue loads. Crack growth rates were measured in the aluminum face sheets and compared with rates in an all-metal panel. After the fatigue tests, the panels were statically loaded to failure to measure their residual strength.

Conventional fatigue tests were also conducted on simple coupon specimens of similar construction to measure the fail-safe characteristics of the composite-metal system.

The results indicate that a composite-reinforced metal panel can be designed to have a residual strength higher than the design limit load after significant fatigue cracks have developed in the metal, and have no more mass than an all-metal panel.

INTRODUCTION

An effective fail-safe structural concept, which has application for present and future aircraft systems such as the space shuttle and advanced technology transports, has been evaluated in this research effort. The all-metal, integrally-formed panel concept has shown considerable potential for improving aerospace structures in terms of low manufacturing cost, high-strength capability, low weight, and inherent fail-safe compression failure characteristics (reference 2). The inclusion of advanced composite material between the two sheets of the integrally-formed panel reduces metal fatigue crack growth and increases residual strength at no increase in mass. A composite-reinforced, integrally-stiffened metal panel is shown in Figure 1.

The all-metal integrally-formed panel (figure 1) consists of two sheets of metal bonded together: (1) a flat outer sheet and (2) an integrally formed and stiffened inner sheet. This panel configuration offers a significant increase in the strength-weight index as compared to the conventional riveted Z panels of the same material and design conditions. By inserting unidirectional composite material between the inner and outer sheets, the composite-reinforced, integrally-stiffened metal panel concept is obtained.

This program investigated the fatigue and fail-safe behavior of this structural concept. Coupon specimens were fabricated and tested in static tension and fatigue to demonstrate the fail-safe characteristics of the composite-metal system. Fifteen composite-reinforced, integrally-stiffened metal panels were fabricated and tested in tension-tension fatigue to determine the metal crack growth rates and panel residual strengths. The panels were made from 7075-T6 aluminum alloy and reinforced with either graphite/epoxy or S-glass/epoxy using an elevated-temperature-cure adhesive. Some panels were also made with graphite/epoxy using a room-temperature-cure adhesive in order to determine the effects of residual thermal stresses.

Page Intentionally Left Blank

SYMBOLS

The physical quantities in this report are given in both the International System of Units (SI) and in the U. S. Customary Units. The SI units are stated first and the customary units afterwards, in parentheses. All principal measurements and calculations were made in the U. S. Customary Units. The Appendix to this report presents factors relating these two systems of units.

2a	total crack length, mm. (in.)
A	total gross cross-sectional area, m^2 ($in.^2$)
E	modulus of elasticity, MN/m^2 (ksi.)
f	gross stress, MN/m^2 (ksi.)
F	gross allowable stress, MN/m^2 (ksi.)
K_t	stress concentration
N	number of cycles of load
P	load, N (lbf.)
R	ratio of minimum to maximum values of cyclic load
t	thickness, mm. (in.)
W	weight, kg (lbm.)
ϵ	strain
μ	ratio of composite stiffness to total stiffness
ρ	density, kg/m^3 ($lbm./in^3$)

Subscripts

am	all metal
c	composite
c-m	composite-metal
m	metal
max	maximum

Subscripts

t	total
tl	tension limit
tu	tension ultimate

DESIGN CRITERIA

The following design criteria were selected to provide a fail-safe structure that would weigh no more than an all-metal structure.

(1) The composite material alone shall support the total limit load assuming the metal to be completely failed.

(2) The mass of the composite-reinforced panel shall be equal to that of an all-metal panel designed to support the same limit load.

(3) Design stresses at limit load shall be two-thirds of ultimate allowable stresses. (See Table I.)

Because of the limited scope of this investigation, consideration was not given to biaxial and shear properties and joint requirements. Such considerations would be necessary to select the minimum gage of metal and thus the minimum weight.

Assuming the metal and composite material to strain equally, the strain in either material is

$$\epsilon = \frac{P_m}{A_m E_m} = \frac{P_c}{A_c E_c} \tag{1}$$

Defining a stiffness ratio " μ " for the composite-metal system as

$$\mu = \frac{A_c E_c}{A_c E_c + A_m E_m} \tag{2}$$

the total load on the composite-metal system would distribute as

$$P_c = \mu P_t \quad , \quad P_m = (1 - \mu) P_t \tag{3}$$

The weight of a composite-metal structure for a unit length is

$$W_{c-m} = \rho_c A_c + \rho_m A_m \tag{4}$$

and the weight of an all-metal structure is

$$W_{am} = \rho_m A_{am} \tag{5}$$

Setting the weight of the composite-metal system equal to the weight of the all-metal structure, condition (2) of the design criteria,

$$\rho_c A_c + \rho_m A_m = \rho_m A_{am} \tag{6}$$

or

$$\frac{A_m}{A_c} = \frac{A_{am}}{A_c} - \frac{\rho_c}{\rho_m} \tag{7}$$

Substituting (7) into (2),

$$\mu = \frac{1}{1 + \left(\frac{E_m}{E_c}\right)\left(\frac{A_{am}}{A_c} - \frac{\rho_c}{\rho_m}\right)} \tag{8}$$

To satisfy condition (1) of the design criteria, the composite must carry the total limit load when the metal fails. Thus,

$$A_c = \frac{P_t}{F_{tl_c}} \tag{9}$$

To satisfy condition (2) of the design criteria, the all-metal system must also carry the total limit load. Thus,

$$A_{am} = \frac{P_t}{F_{tl_m}} \tag{10}$$

Substituting (9) and (10) into (8), the stiffness ratio becomes

$$\mu = \frac{1}{1 + \left(\frac{E_m}{E_c}\right)\left(\frac{F_{tl_c}}{F_{tl_m}} - \frac{\rho_c}{\rho_m}\right)} \tag{11}$$

Using the properties in Table I, Equation (11) gives $\mu = 0.57$ for the graphite panel and $\mu = 0.29$ for the S-glass panel.

TEST SPECIMENS

Fatigue Coupons

Sixty-six fatigue coupons were fabricated as shown in Figure 2. These specimens consisted of all-aluminum control specimens, aluminum-graphite, and aluminum-glass specimens bonded with AF-126 adhesive (elevated temperature cure) and aluminum-graphite specimens bonded with EA-927R adhesive (room temperature cure). Half of these specimens contained a 3.2 mm (0.125 in.) diameter hole to provide a stress concentration factor greater than one.

The all-aluminum control specimens were fabricated from 1.02 mm (0.040 in.) thick 7075-T6 aluminum. The stiffness ratio was $\mu = 0.57$ for the aluminum-graphite coupons and $\mu = 0.29$ for the aluminum-glass coupons.

Composite-Reinforced Panels

One all-metal, integrally-stiffened panel was fabricated from 7075-T6 aluminum. The inner and outer sheets were each 0.51 mm (0.020 in.) thick and bonded together with AF-126 adhesive (394°K (250°F) cure).

Fourteen composite-reinforced, integrally-stiffened metal panels were fabricated. These consisted of six aluminum-graphite panels bonded with AF-126 adhesive, four aluminum-glass panels bonded with AF-126 adhesive, and four aluminum-graphite panels bonded with EA-927R adhesive. The configuration of these panels is shown in Figure 3. The stiffness ratios for these panels are $\mu = 0.57$ for the aluminum-graphite panels and $\mu = 0.29$ for the aluminum-glass panels.

Each panel was 762 mm (30 in.) long, 305 mm (12 in.) wide, and necked down to 241 mm (9.5 in.) at the test section. Panels 1C, 3C, and 8C were not necked down at the test section. A crack starter hole, 6.4mm. (0.25 in.) diameter, was drilled in the center of the panel. Individual fittings were bonded and bolted to each end of the panels to provide attachment to the testing machine.

Page Intentionally Left Blank

TEST PROCEDURE

All of the coupons and panels were subjected to axial tension-tension fatigue loading of constant amplitude and load ratio R of 0.10. The gross stress in the metal stiffener and face sheets and composite materials was calculated in terms of the total applied load using Equations (2) and (3).

The fatigue coupons were tested at several stress levels at a frequency of 30 HZ (1800 cpm). The number of cycles required for the failure of the metal and the composite material respectively were recorded.

The panels were tested at several stress levels and at frequencies ranging from 1 to 10 HZ (60 to 600 cpm). The number of cycles required to initiate a crack in the metal at the test-section hole was recorded. A paper grid with lines spaced at 1.27 mm (0.05 in.) was attached to the panel in line with the primary cracks in the panel test section. A 30- powered transit with crossed hair-lines and mounted on adjustable stands was used to make crack length measurements every 1.27 mm (0.05 in.). There were primarily four cracks to monitor, a crack to each side of the panel centerline on both the stiffener and face sheet sides.

RESULTS AND DISCUSSION

Coupon Fatigue Tests

Figures 4, 5, and 6 show curves of maximum stress against cycles to failure for the coupons with the various composite-metal-adhesive systems. The curves show the cycles to failure for the metal and the additional cycles to failure for the composite material. The metal always failed first. The stresses shown for the composite materials are calculated assuming the metal to be failed. (The ratio of stress in the composite material before and after the metal fails is given by the ratio $1/\mu$. Thus, for the graphite-reinforced coupons, the stress after failure is 1.78 times the stress before failure and for the glass-reinforced coupons 3.45 times the stress before failure.) Conventional fatigue curves are also shown for the 7075-T6 aluminum alloy with $K_t = 1.0$ and $K_t = 2.4$. The value of $K_t = 2.4$ was calculated (reference 3) for the hole neglecting the effects of the composite reinforcement. Curves are faired through the composite material data for convenience.

The cycles to failure of the metal in the graphite-reinforced coupons with $K_t = 1.0$ are somewhat larger for the room-temperature-cure adhesive than the elevated-temperature-cure adhesive. This is due to the residual tensile stresses in the metal caused by the elevated temperature cure. Otherwise, the lives of the metal in the composite-reinforced coupons generally agree with the conventional fatigue curves, and, thus, the composite reinforcement has little effect on the stress concentration factor and the life of the metal.

The curves also show that the graphite-reinforced coupons have exceptional fatigue life after failure of the metal, even at stresses much above the allowable limit stress. The glass-reinforced coupons also have considerable fatigue life after failure of the metal but much less than the graphite-reinforced coupons.

The total life of each of the test specimens can be found in reference 1.

Composite-Reinforced Panel Tests

Figure 7 shows the growth of the crack in the outer face sheet at three different stress levels in the metal for the three composite-metal-adhesive systems. The crack length (2a) in the outer face sheet (see figure 3) and the number of cycles are plotted starting at a crack length (2a) of 25.4 mm (1.0 in.). For convenience, the results for each stress level are contained by a shaded band. (The growth of the crack in the inner face sheet was similar and is reported in detail in reference 1.) For comparison, the results for the all-metal panel are also shown.

The results show that the composite reinforcement greatly reduces the rate of crack growth when compared with the all-metal panel. Also, the rate in the composite-reinforced panels increases with increasing stress but is essentially constant with respect to crack length. Thus, the stresses in the vicinity of

Page Intentionally Left Blank

the crack tip do not increase with increasing crack length as in the case of the all-metal panel. The results also show that the rate of crack growth in the graphite-reinforced panel is less than in the glass-reinforced panel. This is likely due to the heavier reinforcement by the graphite as indicated by the larger value of μ. The difference in crack growth rates between the panels with elevated-temperature-cure and room-temperature-cure adhesive is inconsistent and generally not significant.

After the fatigue cracks were grown one-fourth to one-half the width of the panels, the panels were statically loaded to failure to determine the residual strength. The results are shown in Table II along with the fatigue stress, the total number of cycles, and the proportion of metal cracked for each panel. The results show that the residual strength of the panels generally exceeded the design limit load and, thus, satisfied the design criteria. (Two of the three panels that failed to meet the criteria failed at the end fittings.) However, some degradation of original composite strength due to fatigue is indicated because the residual strengths are generally less than the original ultimate strength (150% limit strength).

CONCLUSIONS

The fatigue tests of the composite reinforced coupons showed that the composite reinforcement generally had little effect on the stress concentration factor for a 1/8 inch diameter hole and the cycles to failure of the metal. The graphite-reinforced and the glass-reinforced coupons had considerable fatigue life after failure of the metal with the graphite-reinforced coupons having a much higher fatigue strength than the glass-reinforced coupons.

The crack growth tests of the composite-reinforced, integrally stiffened panels showed that the composite reinforcement greatly reduced the rate of crack growth in the metal when compared with an all-metal panel. The rate of crack growth was constant with increasing crack length. Thus, the composite reinforcement prevented the stresses in the vicinity of the crack tip from increasing with increasing crack length as was the case in the all-metal integrally formed panel. The rate of crack growth in the graphite-reinforced panels was less than in the glass-reinforced panels. This can probably be attributed to the graphite reinforcement being stiffer than the glass reinforcement.

The residual strength tests of the composite-reinforced, integrally stiffened panels showed that the strength of the panels exceeded the design limit load after much of the metal had failed under fatigue loading.

The results were not significantly different for the room-temperature-cure adhesive and the elevated-temperature-cure adhesive.

In general, the results of this program indicate that composite reinforcement of integrally formed metal panels can provide, without a weight penalty, considerable fail-safe strength after much fatigue damage to the metal. Future studies should improve the design criteria to include biaxial and shear properties, joint requirements, and weight minimization.

Page Intentionally Left Blank

APPENDIX

CONVERSION OF SI UNITS TO U. S. CUSTOMARY UNITS

The International System of Units (SI) was adopted by the Eleventh General Conference on Weights and Measures held in Paris in 1960. Conversion factors required for units used herein are given in the following table:

Physical Quantity	SI Unit (*)	Conversion factor (**)	U.S. Customary Unit
Density	kilograms per cubic meter (kg/m^3)	0.3613×10^{-4}	lbm/in^3
Force	newtons (N)	0.2248	lbf
Length	meters (m)	0.3937×10^{2}	in.
Mass	kilograms (kg)	2.205	lbm.
Stress, Modulus	newtons per sq. meter (N/m^2)	0.145×10^{-6}	ksi = 10^3 lbf/in^2
Temperature	degrees Kelvin (K)	$\frac{9}{5}$ K - 459.67	^{o}F

*Prefixes to indicate multiple of units are as follows:

Prefix	Multiple
mega (M)	10^6
kilo (k)	10^3
milli (m)	10^{-3}

**Multiply value given in SI Unit by conversion factor to obtain equivalent in U. S. Customary Unit.

REFERENCES

1. C. E. Dumesnil: Fatigue Evaluation of Composite-Reinforced Integrally Stiffened Metal Panels, NASA CR-112148, 1972.

2. J. C. McQueen, S. W. McClaren, and A. P. Martin: Integrally Formed Structures: A New Stiffened Panel Concept, Journal of Aircraft, Vol. 7, No. 6, Nov. Dec., 1970, pp. 563-566.

3. R. E. Peterson, Stress Concentration Design Factors, John Wiley & Sons, Inc., New York, 1953.

Page Intentionally Left Blank

TABLE I

DESIGN PROPERTIES OF
METAL AND COMPOSITE MATERIALS

MATERIAL	LIMIT STRESS		TENSION MODULUS		DENSITY	
	MN/m^2	(ksi)	MN/m^2	(ksi)	kg/m^3	(lbm/in^3)
7075-T6 Aluminum	359	52	71,000	10,300	2768	0.100
Graphite/Epoxy (HT/S)	696	101	131,000	19,000	1550	0.056
S-Glass Epoxy (1009-26S)	986	143	61,000	8,900	1882	0.068

TABLE II

PANEL RESIDUAL STRENGTH

TYPE OF PANEL	MAX. FATIGUE STRESS IN METAL		TOTAL CYCLES	% OF METAL CRACKED	COMPOSITE AREA		DESIGN LIMIT LOAD [1]		RESIDUAL STRENGTH		% OF DESIGN LIMIT LOAD
	MN/m^2	(ksi)			mm^2	(in^2)	kN	($lbf \times 10^{-3}$)	kN	($lbf \times 10^{-3}$)	
All Metal	103	15.0	68,658	47	513.8	.7964 [2]	206.8	46.5	52.2	11.7	25
Graphite Reinforced 394° K (250° F) Cure Adhesive	116	16.9	779,842	41	361.6	.5606	251.8	56.6	223.3	50.2	89
	116	16.9	465,606	26	418.0	.6480	291.3	65.5	364.7	82.0	125
	116	16.9	304,134	22	361.6	.5606	251.8	56.6	263.8	59.3	105
	172	25.0	176,452	23	361.6	.5606	251.8	56.6	302.5	68.0	120
	138	20.0	254,394	25	361.6	.5606	251.8	56.6	[3]	[3]	---
	103	15.0	1,020,520	36	361.6	.5606	251.8	56.6	539.1	121.0	124
S-Glass Reinforced 394° K (250° F) Cure Adhesive	103	15.0	554,529	43	275.0	.4264	271.3	61.0	453.7	102.0	167
	103	15.0	631,049	53	237.9	.3689	235.3	52.9	286.9	64.5	122
	138	20.0	341,983	53	237.9	.3689	235.3	52.9	276.9	62.3	118
	172	25.0	206,476	40	237.9	.3689	235.3	52.9	257.5	57.9	109
Graphite Reinforced Room Temp. Cure Adhesive	172	25.0	252,993	[4]	418.0	.6480	291.3	65.5	253.5	57.0	87
	103	15.0	1,853,408	[4]	418.0	.6480	291.3	65.5	371.8	83.6	127
	138	20.0	530,897	[4]	418.0	.6480	291.3	65.5	279.3	62.8	96
	116	16.9	506,465	28	361.6	.5606	251.8	56.6	351.4	79.0	141

[1] Based on equation (9) and limit stresses in Table I.

[2] All aluminum area.

[3] Residual strength not recorded.

[4] Failed at end fittings outside of test area.

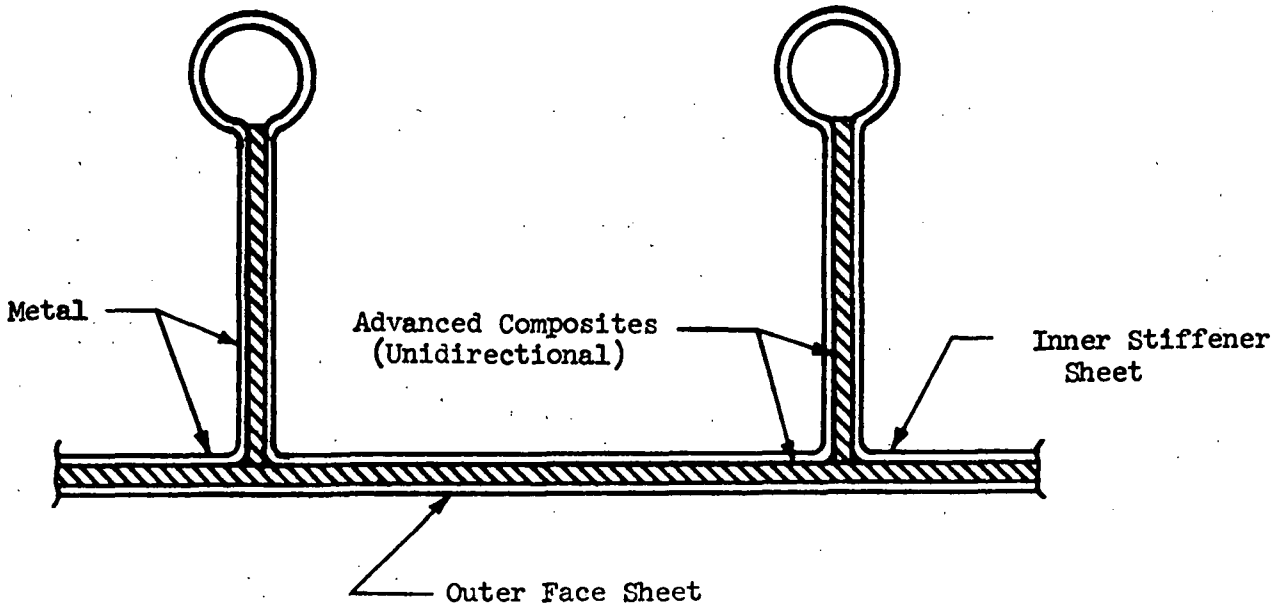

Figure 1 Composite-Reinforced, Integrally Stiffened Metal Panel Structural Concept

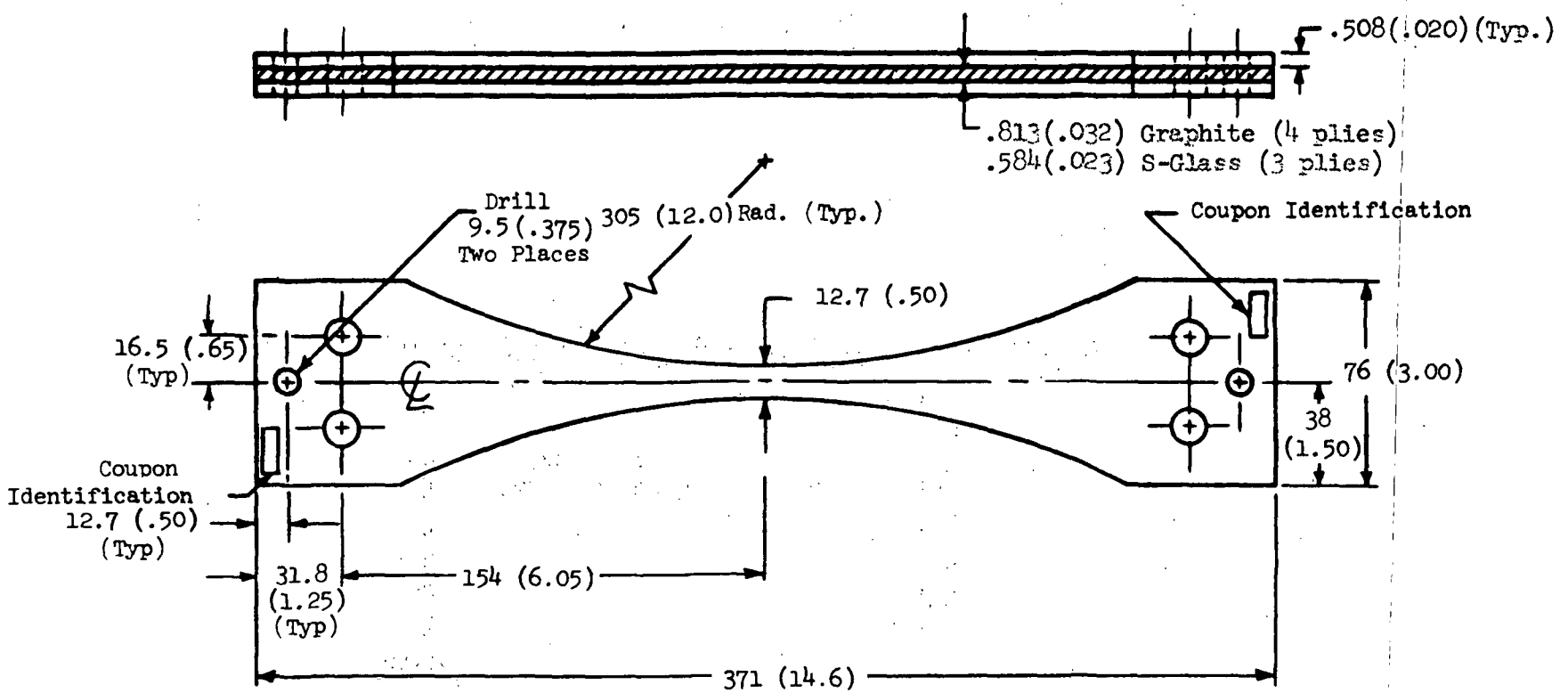

FIGURE 2 FATIGUE COUPON SPECIMEN

(Dimensions in Millimeters and Inches Respectively)

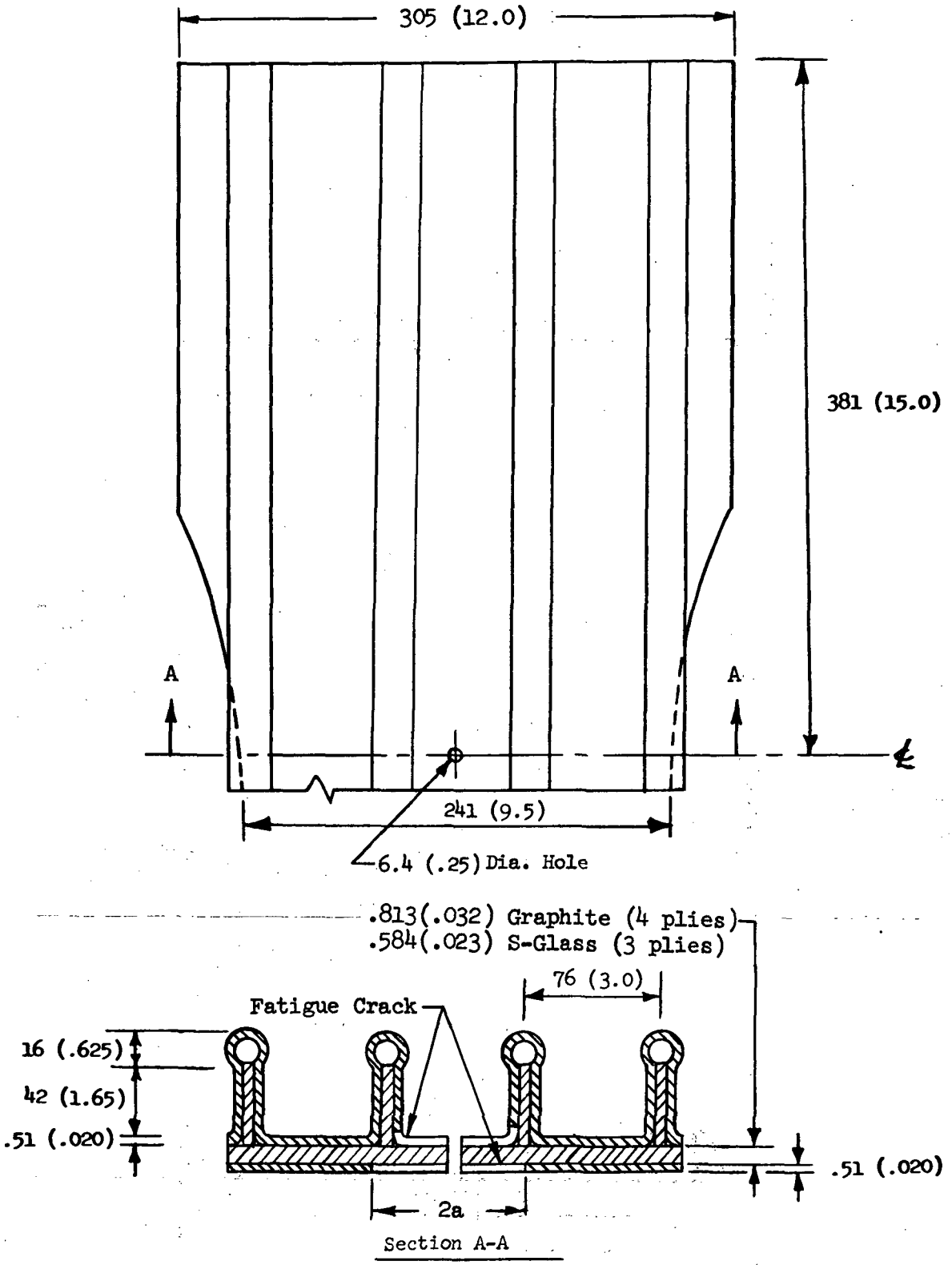

Figure 3 Composite-Reinforced, Integrally Stiffened Metal Panel (Dimensions in Millimeters and Inches, Respectively)

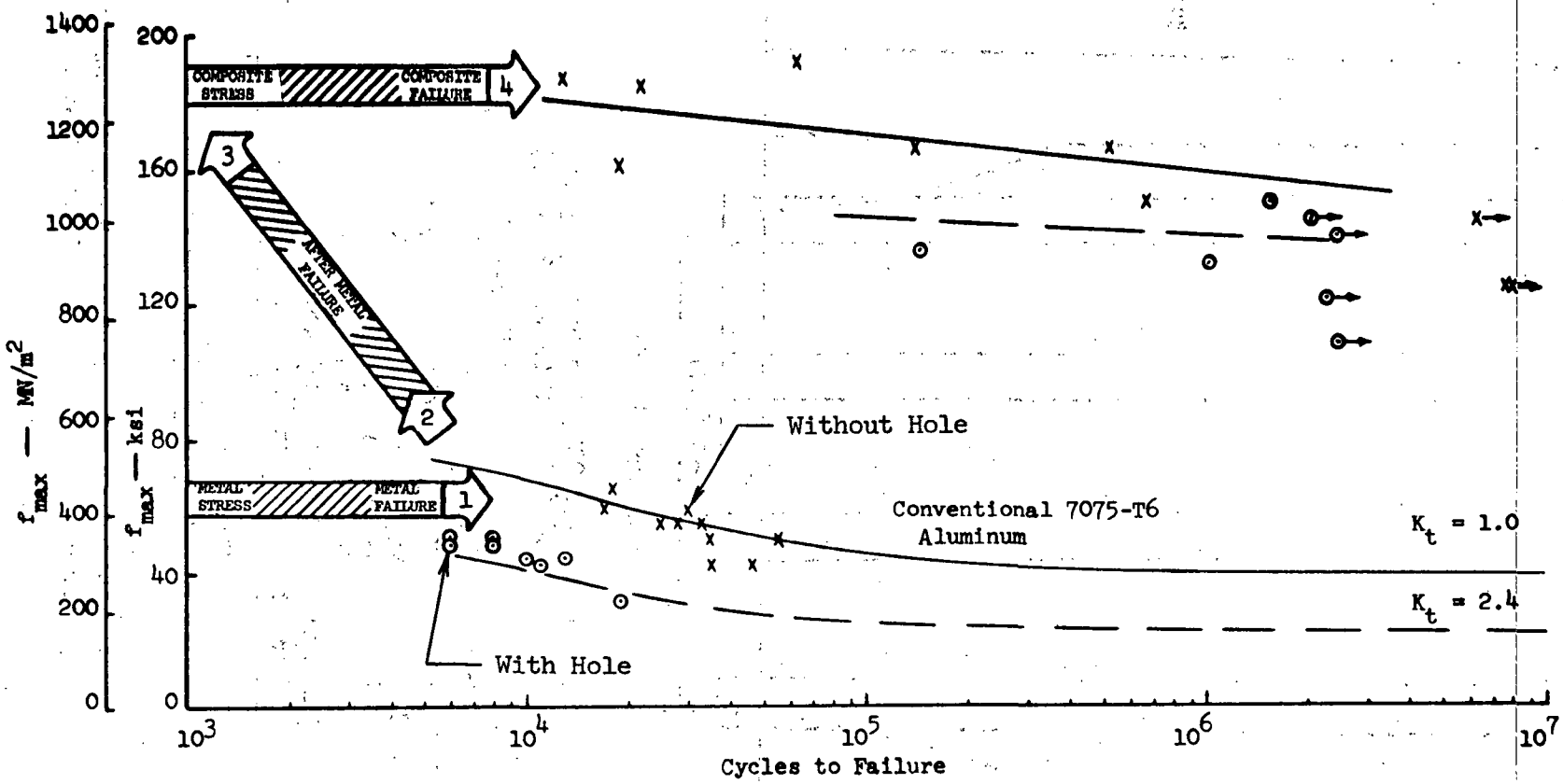

FIGURE 4 FATIGUE LIFE CURVE
ALUMINUM-GRAPHITE
AF-126 Adhesive
μ = 0.57, R = 0.10

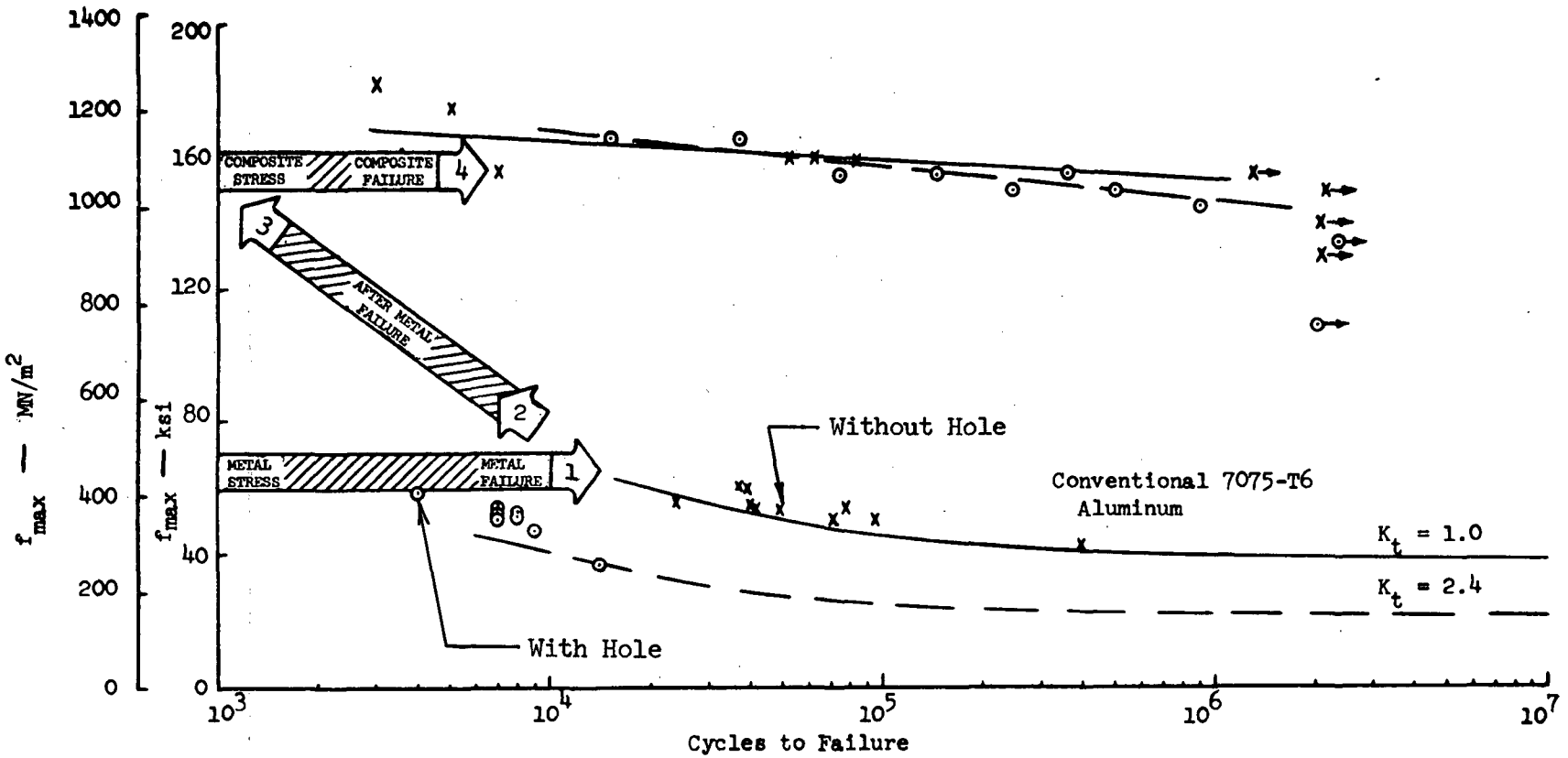

FIGURE 5 FATIGUE LIFE CURVE
ALUMINUM-GRAPHITE
EA-927R Adhesive
μ = 0.57, R = 0.10

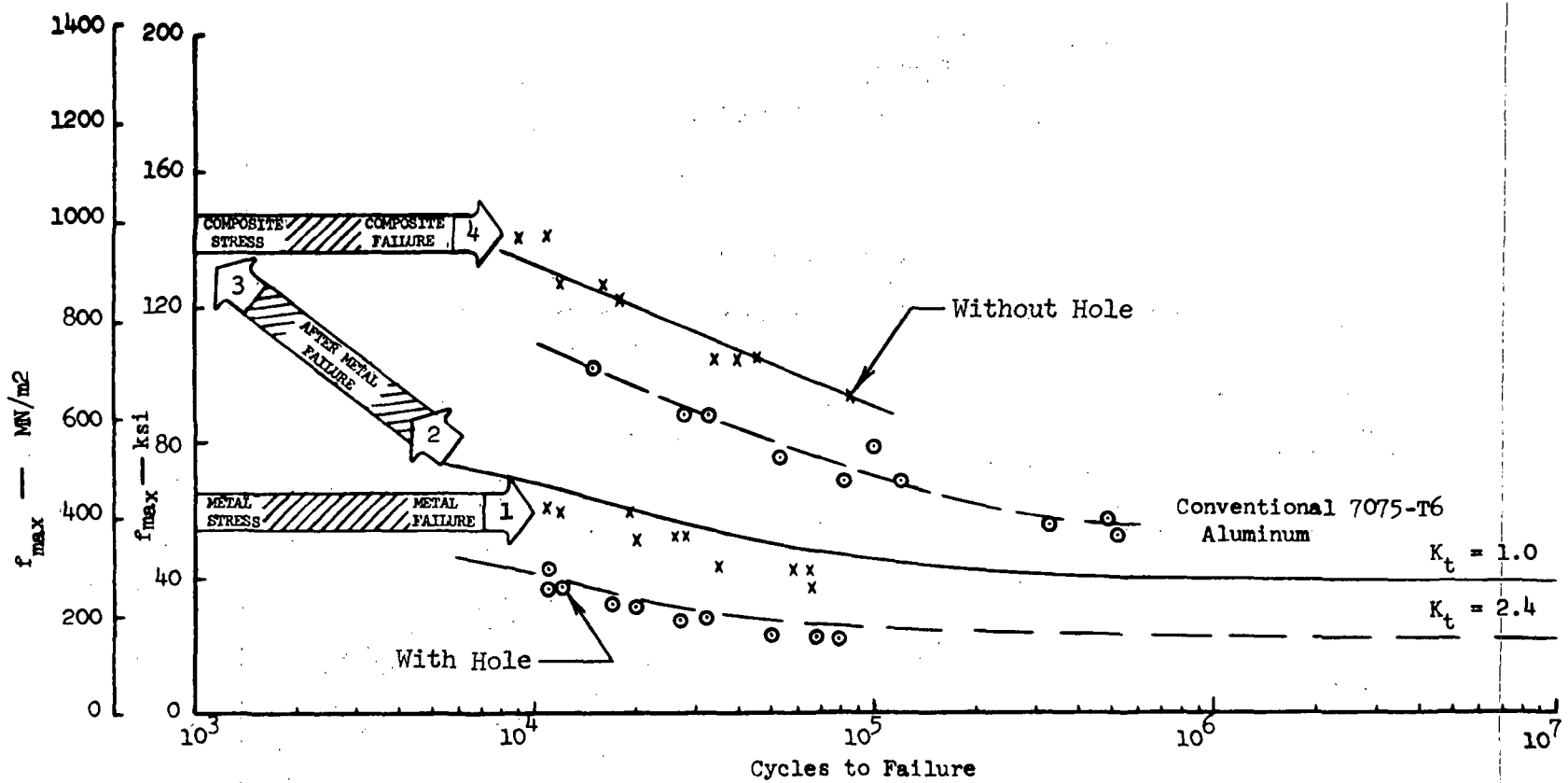

FIGURE 6 FATIGUE LIFE CURVE
ALUMINUM-GLASS
AF-126 Adhesive
μ = 0.29, R = 0.10

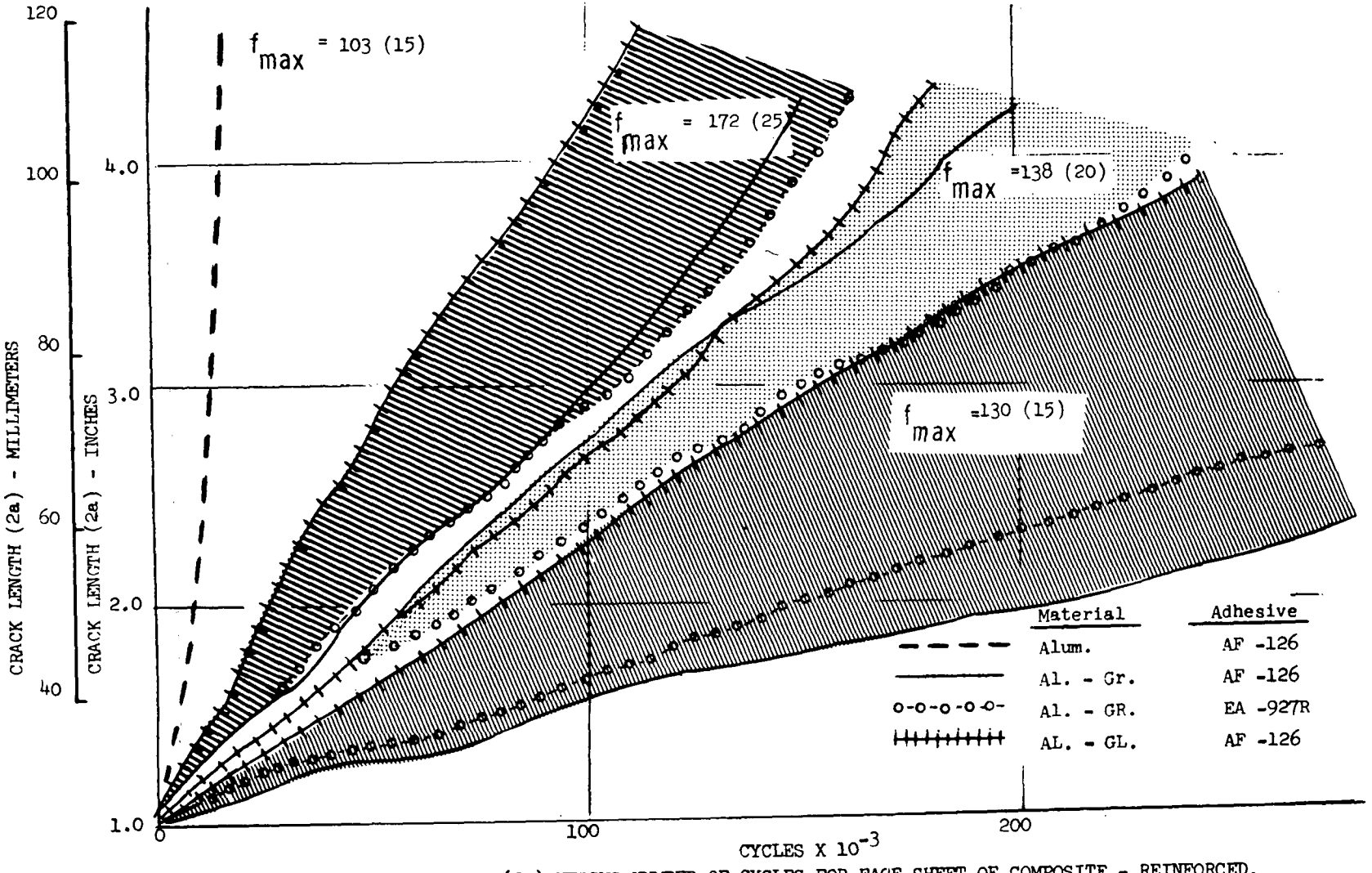

FIGURE 7 MEASURED CRACK LENGTH (2a) VERSUS NUMBER OF CYCLES FOR FACE SHEET OF COMPOSITE - REINFORCED, INTEGRALLY STIFFENED METAL PANELS (MAXIMUM STRESS, f_{max}, IS IN MN/m^2 AND KSI RESPECTIVELY)

NATIONAL AERONAUTICS AND SPACE ADMINISTRATION
WASHINGTON, D.C. 20546

OFFICIAL BUSINESS
PENALTY FOR PRIVATE USE $300

SPECIAL FOURTH-CLASS RATE
BOOK

POSTAGE AND FEES PAID
NATIONAL AERONAUTICS AND
SPACE ADMINISTRATION
451

U.S.MAIL

POSTMASTER: If Undeliverable (Section 158 Postal Manual) Do Not Return

"The aeronautical and space activities of the United States shall be conducted so as to contribute . . . to the expansion of human knowledge of phenomena in the atmosphere and space. The Administration shall provide for the widest practicable and appropriate dissemination of information concerning its activities and the results thereof."

—NATIONAL AERONAUTICS AND SPACE ACT OF 1958

NASA SCIENTIFIC AND TECHNICAL PUBLICATIONS

TECHNICAL REPORTS: Scientific and technical information considered important, complete, and a lasting contribution to existing knowledge.

TECHNICAL NOTES: Information less broad in scope but nevertheless of importance as a contribution to existing knowledge.

TECHNICAL MEMORANDUMS: Information receiving limited distribution because of preliminary data, security classification, or other reasons. Also includes conference proceedings with either limited or unlimited distribution.

CONTRACTOR REPORTS: Scientific and technical information generated under a NASA contract or grant and considered an important contribution to existing knowledge.

TECHNICAL TRANSLATIONS: Information published in a foreign language considered to merit NASA distribution in English.

SPECIAL PUBLICATIONS: Information derived from or of value to NASA activities. Publications include final reports of major projects, monographs, data compilations, handbooks, sourcebooks, and special bibliographies.

TECHNOLOGY UTILIZATION PUBLICATIONS: Information on technology used by NASA that may be of particular interest in commercial and other non-aerospace applications. Publications include Tech Briefs, Technology Utilization Reports and Technology Surveys.

Details on the availability of these publications may be obtained from:

SCIENTIFIC AND TECHNICAL INFORMATION OFFICE

NATIONAL AERONAUTICS AND SPACE ADMINISTRATION

Washington, D.C. 20546