N 73-17117

MCR-72-276
Contract NAS8-29024

Phase I
Final
Report

December 1972

Conceptual Design Study for a Teleoperator Visual System

CASE FILE COPY

MARTIN MARIETTA

MCR-72-276

Contract NAS8-29024

Phase I
Final Report

December 1972

CONCEPTUAL DESIGN STUDY FOR A TELEOPERATOR VISUAL SYSTEM

Prepared by

D. Adams
C. Grant
C. Johnson
R. Meirick
C. Polhemus
A. Ray
D. Rittenhouse
R. Skidmore

Approved

J. Robert Tewell
Program Manager

MARTIN MARIETTA CORPORATION
DENVER DIVISION
Denver, Colorado 80201

FOREWORD

This document presents the results of work performed by Martin Marietta Corporation's Denver Division under contract to the National Aeronautics and Space Administration's Marshall Space Flight Center. This Phase I Final Report was prepared in partial fulfillment of Contract NAS8-29024, *Conceptual Design Study for a Teleoperator Visual System*. The Contracting Officer's Representative is Mr. Carl T. Huggins.

CONTENTS

		Page
I.	INTRODUCTION	I-1 thru I-3
II.	SUMMARY	II-1
A.	General Requirements	II-1
B.	Concept Development	II-1
C.	Subsystem Requirements and Analysis	II-2
D.	Concept Evaluation	II-2
III.	GENERAL REQUIREMENTS	III-1
A.	Mission Requirements	III-1
B.	Visual Guidelines & Imposed Requirements	III-6
C.	FFTO Characteristics	III-7 and III-8
IV.	VISUAL SYSTEM CONCEPTS	IV-1
A.	Visual System Concept 1: Direct Viewing	IV-2
B.	Visual System Concept 2: Television	IV-2
C.	Visual System Concept 3: Computer-Generated TV Display	IV-4
D.	Visual System Concept 4: Holography	IV-5
E.	Concept Recommendations	IV-7
V.	TV SYSTEM CONCEPTS	V-1
A.	Monoscopic Television Systems	V-1
B.	Stereoscopic Television Systems	V-2
C.	Foveal-Peripheral Systems	V-10
D.	System Recommendations	V-12 and V-13
VI.	SUBSYSTEM REQUIREMENTS FOR THE TV VISUAL SYSTEM	VI-1
A.	Display Resolution	VI-4
B.	Total Display Area	VI-4
C.	Allowable Display Size	VI-6
D.	Minimum Monitor Height	VI-6
E.	Sensor Field of View	VI-8
F.	Size of Object Displayed	VI-8
G.	Size of Object Resolved	VI-8
H.	Summary	VI-8 and VI-9

VII.	SUBSYSTEM REQUIREMENTS ANALYSIS	VII-1
A.	Sensors	VII-1
B.	Illumination	VII-7
C.	Displays	VII-16
D.	TV Monitors	VII-31
E.	Deployment/Articulation	VII-34
F.	Telecommunications	VII-48
G.	Summary of Subsystem Requirements	VII-65 and VII-66
VIII.	CONCEPT EVALUATION	VIII-1
A.	Simulation Summary	VIII-1
B.	Visual System Apparatus	VIII-1
C.	Simulation of Visual System for Basic Depth Alignment	VIII-5
D.	Simulation of a Remote Manipulation Task	VIII-12
E.	Simulation of Satellite Capture and Inspection	VIII-24 thru VIII-39
IX.	CONCLUSIONS	IX-1
X.	RECOMMENDATIONS	X-1
A.	Preliminary Visual System Concept	X-1
B.	Phase II Study	X-7 thru X-10
XI.	REFERENCES	XI-1
APPENDIX -- DERIVATION OF FREE-FLYER SIMULATION EQUATIONS		A-1 thru A-9

Figure

I-1	Teleoperator System Concepts	I-1
I-2	FFTO Elements	I-2
I-3	Teleoperator Visual System Study Task Flow	I-3
IV-1	Direct Viewing Concept	IV-3
IV-2	Television Concept	IV-3
IV-3	Computer-Generated TV Display Concept	IV-4
IV-4	Holographic Sensor Concept	IV-5

V-1	Dual-Camera Stereo System	V-3
V-2	Single-Camera Stereo System	V-3
V-3	Polarized Stereo Display Concept	V-5
V-4	Color-Separated Stereo Display Concept	V-5
V-5	Helmet-Mounted Stereo Display Concept	V-6
V-6	Fresnel Stereo Display Concept	V-7
V-7	Lenticular Stereo Display Concept	V-9
V-8	Stereo Foveal-Monoperipheral System Concept	V-11
V-9	Variable-Resolution Lenses	V-12
VI-1	Subsystems in the TV Visual System	VI-1
VI-2	Display Size Requirement	VI-3
VI-3	Allowable Display Size	VI-5
VI-4	Subtended Visual Angles	VI-7
VI-5	Displayed and Resolved Object Sizes	VI-9
VII-1	Cross-Sectional Diagram of Optical Waveguide	VII-8
VII-2	Optical Waveguide Transmission Characteristics	VII-8
VII-3	Light Source Intensity	VII-11
VII-4	Illumination Power Requirements	VII-13
VII-5	Combined Passive and Active Lighting Scheme	VII-15
VII-6	Fresnel Display Components	VII-16
VII-7	Lenticular Display Components	VII-20
VII-8	Lenticular Display Resolution	VII-20
VII-9	Image Element Pair Equal to Lenticular Lens Element	VII-22
VII-10	Image Element Pair Greater than Lenticular Lens Element	VII-23
VII-11	Longitudinal Depth of Focus	VII-25
VII-12	Back Projected Monoscopic Display	VII-28
VII-13	Fresnel Stereoscopic Display	VII-28
VII-14	Lenticular Stereoscopic Display	VII-29
VII-15	Lenticular Alignment Hardware and Optics	VII-29
VII-16	Display Comparison Setup	VII-30
VII-17	Display Evaluation Setup	VII-30
VII-18	Satellite Maintenance	VII-36
VII-19	Satellite Retrieval	VII-36
VII-20	Longitudinal Retrieval	VII-38
VII-21	Nodal Retrieval	VII-38
VII-22	FFTO Sensor Locations	VII-39
VII-23	Fixed-Base, Variable LOS Configuration	VII-40
VII-24	Variable Base-Variable Line of Site	VII-42
VII-25	Fixed Length Boom Geometry	VII-42
VII-26	Extendible Boom, Variable Base, Variable LOS	VII-43
VII-27	Visual Requirements Summary	VII-45
VII-28	RF Output Power Required vs Antenna Range	VII-52
VII-29	Synchronous Video Switching	VII-56
VII-30	Extra Wideband Single Video Link	VII-58

VII-31 Separate Channel Video Link VII-59
VII-32 Arm-Mounted Camera RF Link Configurations VII-61
VII-33 Four-Camera Visual System Telecommunications Block Diagram VII-64
VIII-1 Stereoscopic Fresnel Display VIII-4
VIII-2 Mean Absolute Alignment Error across Subjects VIII-8
VIII-3 Mean Absolute Alignment Error across Camera Positions and Objects VIII-9
VIII-4 Mean Time Required to Modify First Response Across Subjects VIII-10
VIII-5 Task Panel VIII-15
VIII-6 Visual Display Setup for Manipulator Studies VIII-15
VIII-7 Experimental Setups for Manipulator Task Simulation . . VIII-17
VIII-8 Control Station Mockup VIII-25
VIII-9 Free-Flyer with Manipulator and Attached Camera VIII-25
VIII-10 Inspection Task Mockup VIII-27
VIII-11 Inspection Task Trajectory VIII-27
VIII-12 1/20-Scale Model of the Satellite VIII-29
VIII-13 Stereo Reticle VIII-31
VIII-14 Monocular Reticle VIII-31
VIII-15 1/4-Scale Model of the Satellite VIII-32
VIII-16 Mean and 80% Confidence Interval for Angular Error . . VIII-36
VIII-17 Mean and 80% Confidence Interval for Y and Z Alignment Error VIII-37
VIII-18 Mean and 80% Confidence Interval for Pitch and Yaw Alignment Error VIII-38
X-1 Maintenance and Inspection Camera Locations X-3
X-2 Satellite Retrieval Camera Locations X-5
X-3 Camera Mounted on Manipulator X-6
X-4 Visual System Displays and Controls X-6

Table

III-1 Satellite Retrieval III-3
III-2 Satellite Maintenance III-5
III-3 FFTO Free-Space Maneuvering Characteristics III-7
III-4 FFTO Stabilization Characteristics III-8
VII-1 Space-Qualified, NTSC-Compatible TV Cameras VII-2
VII-2 Sensor Differences between Candidate Systems VII-5
VII-3 Sensitivity of Various Space-Qualified TV Cameras . . . VII-9
VII-4 Analytical Comparison of Lenticular and Fresnel Stereo Displays VII-26
VII-5 Bench Test Results VII-31
VII-6 Typical Monitor Characteristics VII-33
VII-7 Monocular and Stereoscopic Concept Summary VII-65
VII-8 Typical Video System Characteristics VII-66

VIII-1 Teleoperator Visual System Simulation Plan VIII-2
VIII-2 Teleoperator Visual System Simulation Results VIII-3
VIII-3 Subjects' Eye Examination Results VIII-6
VIII-4 Mean Errors in Basic Depth Alignment Simulation VIII-7
VIII-5 Operators' Eye Examination Results VIII-14
VIII-6 Experimental Setups for Manipulator Task Simulation . . VIII-18
VIII-7 Subjective Evaluation of Camera, Lighting and Monitor Locations VIII-20
VIII-8 Results of the Satellite Capture Simulation VIII-34

I. INTRODUCTION

Plans for extending man's exploration and understanding of space include the use of remotely controlled teleoperators which, when controlled from a safe, habitable location, have the advantage of using man's ability to make decisions as unforeseen conditions arise while permitting him to stand off from any hazardous conditions.

Teleoperators for space application are generally classified in three distinct types: (1) systems attached to a manned spacecraft; (2) unmanned roving vehicles; and (3) free-flying systems. These systems, conceptually shown in Fig. I-1, are extremely complementary, in that the first operates solely within the range of a manned spacecraft [such as the 15.3-m (50.0-ft) manipulator presently baselined in the Shuttle Program for use in cargo handling and docking], while the second operates on lunar or planetary surfaces (in a similar manner as the Russian Lunokhod). The third system takes up the gap between the other two systems by operating within those earth orbits unattainable by the Shuttle, as well as on long-range missions such as comet and asteroid exploration. This study is primarily concerned with the free-flying system, which encompasses small free-flying teleoperators (FFTOs) and the class of larger FFTOs commonly referred to as Space Tugs.

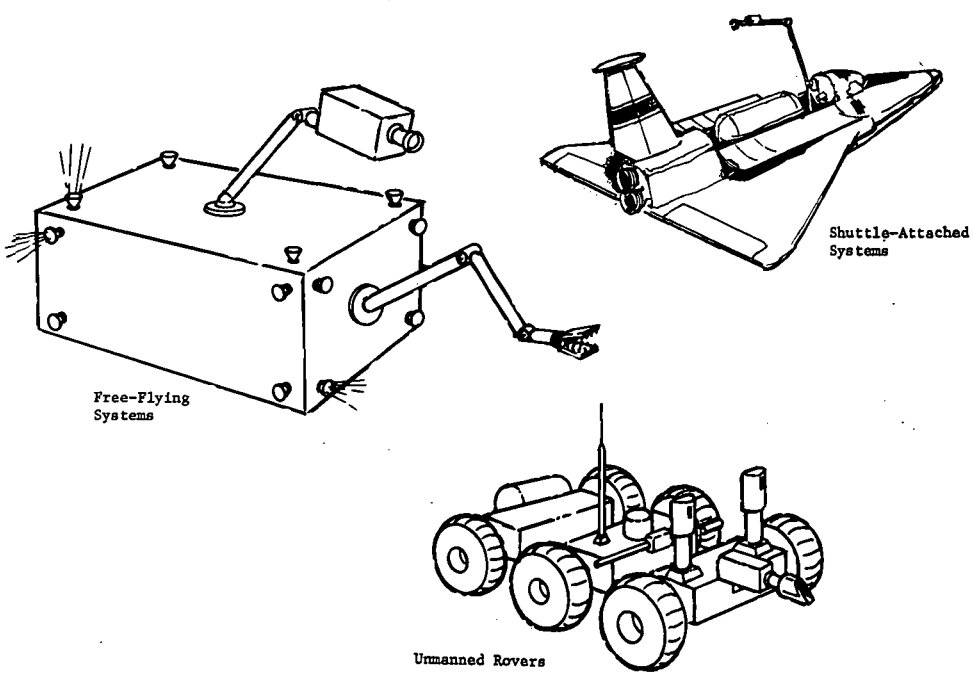

Fig. I-1 Teleoperator System Concepts.

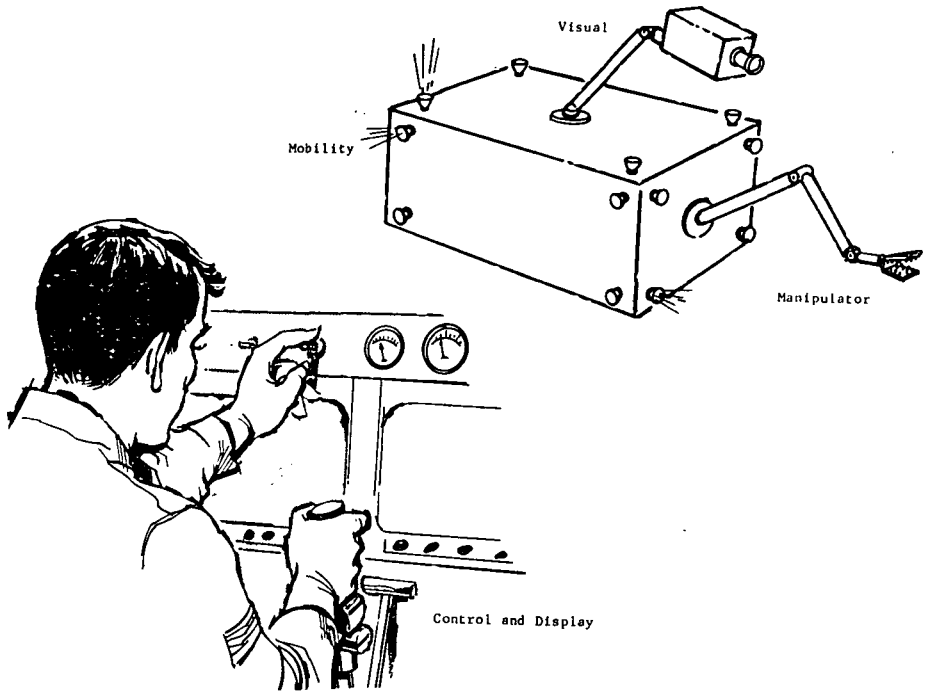

Fig. I-2 FFTO Elements

Fig. I-2 FFTO Elements

An FFTO, as shown in Fig. I-2, generally consists of four basic elements: (1) a remotely controlled vehicle to provide maneuvering to and from the work site and mobility about the satellite; (2) one or more manipulative devices, representative of man's arms and hands, to enable the performance of tasks at the work site; (3) a visual system, analogous to man's eyes, to allow viewing of the work site and task activity; and (4) a control and display station, remotely located in a manned spacecraft or on earth, from which the total FFTO mission operations are supervised and controlled. The most important of these is the visual system since this is the primary sensor used by the FFTO operator in accomplishing FFTO tasks. The objectives of this study that relate to the FFTO visual system are:

1) To investigate visual system concepts for application to teleoperator operations, and, based on technical judgment, propose a candidate for consideration by NASA for preliminary design;

2) To generate a preliminary design of the concept selected by NASA.

The study was divided into two phases--Conceptual Design and Preliminary Design--each of which satisfies an object identified above. The two phases were then subdivided into the tasks shown in Fig. I-3.

This report describes the results of the work performed during Phase I.

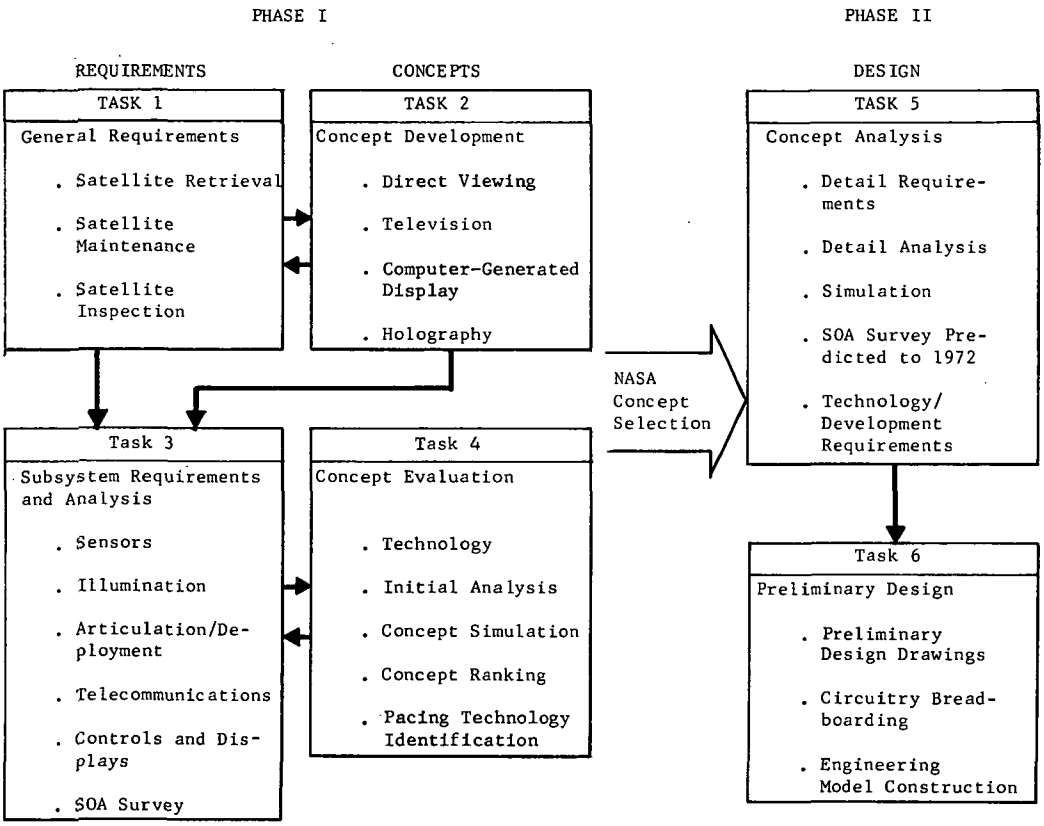

Fig. I-3 Teleoperator Visual System Study Task Flow

II. SUMMARY

This report presents the results of the work performed by Martin Marietta during the first phase of the conceptual design study for a teleoperator visual system. This phase consisted of four tasks: general requirements; concept development; subsystem requirements and analysis; and concept evaluation.

A. GENERAL REQUIREMENTS

Documents provided by NASA were reviewed and used to establish the general requirements and guidelines for the visual system (Chapter III).

B. CONCEPT DEVELOPMENT

Four visual system concepts were considered: direct vision; television; optical radar/computer-generated displays; and holography. These concepts are discussed in Chapters IV and V. Based on the general requirements, three of these concepts were easily eliminated. The remaining concept was television.

A detailed investigation of TV concepts established eight potential candidates--one monoscopic technique and seven stereoscopic techniques. The stereoscopic techniques were further subdivided into two types of sensor systems (dual and single split-field) and seven types of display systems (polarized, color-separated, helmet-mounted, Fresnel, lenticular, stereo-foveal, and foveal lens). Based on operator comfort, complexity, and state-of-the-art considerations, three candidate systems were selected for further investigation: monocular, dual sensor-Fresnel display, and dual sensor-lenticular display.

C. SUBSYSTEM REQUIREMENTS AND ANALYSIS

As described in Chapters VI and VII, commonality between the candidate TV subsystems was identified so that an analysis could be performed on a subsystem basis, independent of the total visual system. A tradeoff study was conducted between the two stereoscopic systems. The characteristics of each system were compared analytically, and a bench-type setup was constructed for both parametric and subjective evaluations. The lenticular display was eliminated from further consideration, primarily because of component complexity, alignment requirements, and subjective comparisons with the Fresnel display.

The stereoscopic and monoscopic subsystem analysis showed that the systems compared favorably in terms of general requirements such as bandwidth, power, weight, volume, and state-of-the-art/development requirements.

D. CONCEPT EVALUATION

The monoscopic and stereoscopic systems were assembled and evaluated using man-in-the-loop simulations. These simulations consisted of three phases: static, master-slave manipulator, and a six degree-of-freedom moving base. The static phase investigated camera locations and depth alignment. In the second phase, a task panel was constructed for use with a Control Research Laboratories Model L manipulator arm and the systems were compared on the basis of typical FFTO maintenance operations. In the third phase, Martin Marietta's six-degree-of-freedom moving base, programmed with the FFTO maneuvering characteristics, was used with a scaled spinning/nutating satellite to provide data on system performance relative to a satellite inspection or retrieval mission.

Based on the results, a hybrid stereo-monoscopic visual system concept was recommended.

III. GENERAL REQUIREMENTS

The general visual requirements are primarily based on three FFTO applications: satellite inspection, satellite maintenance, and satellite retrieval (assuming a passive or spinning/nutating satellite).

A significant amount of work has already been completed in the areas of FFTO mission requirements, system requirements, performance requirements, man-machine interface requirements, and flight experiments. At the start of this study we reviewed documents received from NASA and formulated several general requirements based on information in Ref 1 thru 5 and on the requirements, guidelines, and constraints contained in the study statement of work.

A. MISSION REQUIREMENTS

1. Satellite Inspection

The basic tasks to be accomplished in satellite inspection are contained within the other two missions. This is evident since inspection must occur prior to maintenance, capture, or retrieval. As a result, inspection functions have been combined into the other missions; however, where only satellite inspection is to occur, only the inspection portion of the satellite capture and retrieval will apply.

2. Satellite Retrieval

The satellite retrieval mission assumes the FFTO is in the near vicinity of the satellite. In all satellite retrieval tasks, it will be assumed that the satellites are prepared for capture. This preparation will include some or all of the items listed below:

1) Attachment points located along the principle axes of rotation;

2) Markings, identification coding, etc;

3) Capability for remote deactivation of attitude control systems, jettisoning of appendages, etc.

The degree to which satellite preparation is provided directly affects the work load the teleoperator must bear for satellite capture.

Table III-1 shows the overall functions for the retrieval mission and identifies the corresponding general visual requirements.

3. Satellite Maintenance

The satellite maintenance mission includes all the functions, tasks, and requirements of satellite retrieval, since maintenance starts after attachment to the satellite. Therefore, for this analysis, satellite maintenance will include all requirements necessary for satellite capture. In addition, the satellite maintenance requirements assume that:

1) Manipulators are adequate to perform all required tasks;

2) Maintenance is performed in free space;

3) The FFTO is attached to the satellite maintenance subject;

4) Satellite maintenance candidates are adequately designed to facilitate teleoperator maintenance and repair.

The general class of satellite maintenance missions includes repair, resupply, refurbishment, and maintenance of satellite systems and components. The operations included in these missions are:

1) Removal and replacement of modules;

2) Maintenance, including cleaning, aligning, inspecting, attaching, tightening, and calibrating;

3) Repair, including mending, bonding, welding, patching, deforming, sealing, and cutting;

4) Updating, including adding, removing, and modifying;

5) Deployment, including installing, assembling, and extending.

Table III-1 Satellite Retrieval

Function	Teleoperator Tasks	Teleoperator Requirements	Visual Task	Visual Requirements
Stationkeeping	- Assume position - Align attitude angles - Determine position changes - Maintain position - Monitor location of obstacles	- Maneuver to position - Accuracy, ±30 deg (±0.524 rad) - High-accuracy-limit cycle, 0.5 deg (0.008 rad) - Correct errors - Ranging aids Hold rates, 0.1 fps (0.03 m/sec) Hold position, ±2 ft (±0.61 m) - Full view of satellite	- Locate satellite position in working volume - Estimate range - Estimate closing velocity	- View entire working volume - View volume within 25 ft (7.62 m) of satellite - Range <100 ft (<30.5 m) - Accuracy, ±2 ft (±0.61 m) - Velocity, ≤0.1 fps (≤3.05 cm/sec)
Determining Satellite Dynamics	- Track entire satellite - Identify axis of rotation - Align attitude and body axis - Measure rotation rates - Measure stability about the axis	- Wide field of view [60 deg (1.047 rad)] - Accuracy, TBD - Accuracy, TBD - Accuracies, 0.1 to 2 rpm depending on satellite - Measured nutation accuracy, TBD	- Estimate rotational axes - Estimate axis stability - Estimate rotational rates - Estimate direction and amount of attitude misalignments - Estimate alignment with satellite axis of interest	- Discern axes of rotation - Discern nutation angles to within 45 deg (0.785 rad) - Nutation rates, ≤10 rpm - Spin rates, ≤100 rpm - Discern relative attitude alignment between FFTO and satellite - Discern relative axis alignment between FFTO and satellite axis of interest
Satellite Inspection	- Maneuver around satellite - Inspect structures and components	- Circumnavigate in 2 orthogonal planes - Maintain distance and position in plane - Resolution, 1 in. (2.54 cm) - High resolution, 0.1 in. (0.25 cm)	- Ascertain the general integrity of the satellite	- If satellite is nutating and/or spinning, stop relative motion to inspect satellite - Resolution, 1 in. (2.54 cm) - High resolution, 0.1 in. (0.25 cm)
Locating Attachment Points	- Identify attachment point - Inspect attachment points - Track attachment points	- Lighting - Size resolution, 0.2 in. (0.51 cm) - Motion resolution, 5 arc-minutes/sec (0.001 rad/sec)	- Ascertain docking points - Track docking points	- Search satellite surface - Resolution, 0.2 in. (0.51 cm) - Motion resolution, 5 arc-minutes/sec (0.001 rad/sec)
Preparing for Capture	- Position vehicle for capture - Position manipulators - Synchronize effector rate	- Attitude accuracy, ±3 deg (±0.052 rad) - Inertial axis accuracy, TBD - Positioning accuracy, TBD - Accuracy, 0.1 to 2 rpm	- Estimate alignments - Estimate distance rates - Discern and track potential obstructions	- Attitude accuracy, ±3 deg (±0.052 rad) - Views to allow 3-dimensional positioning to ±3 in. (±7.62 cm) - Rate accuracy, 0.1 to 2 rpm - View work site for possible obstructions
Achieving Contact	- Impart closing velocity - Maintain alignment - Achieve contact - Secure effector grasp - Monitor rates	- 0.05 to 0.2 fps (1.52 to 6.10 cm/sec) - X-axis alignment, 0.2 ft (6.10 cm) - Attitude, ±3 deg (±0.052 rad) - Observe contacts - Adjust effector attitude to contact all points - Forces, TBD - Determine cluster motions	- Discern close in range - Discern docking rates - Discern docking rates	- View for 3-dimensional positioning of docking device to ±1 in. (±2.54 cm) - Resolve relative rates to 0.05 fps (1.52 cm/sec)
Satellite Stabilization	- Impart despin forces - Monitor spin rates - Monitor other rates - Verify completion of despin	- Forces, TBD - Rate measurement aids - Rate measurement aids - Decision criteria		

The satellite on-orbit maintenance missions essentially involve one major maintenance operation--the removal and replacement of modules (Ref 1 and 4). It shall, therefore, be assumed that the primary maintenance requirements are associated with removal and replacement. A detailed analysis of this task is shown in Table III-2.

Table III-2 Satellite Maintenance

Function	Teleoperator Tasks	Teleoperator Requirements	Visual Tasks	Visual Requirements
Prepare for Removal	- Search for module - Locate module - Ingress work site - *Inspect work site* - Identify modules - Determine module *location* - Orient for removal - Configure work site - Configure manipulator	- Identify 2-in. (5.08-cm) markings - Identify 0.2-in. (0.51-cm) markings - *Identify 1-in. (2.54-cm) obstacles* - Identify 0.05-in. (0.13-cm) obstacles - *Gross 3-D perception* - Deactivate systems - Move obstacles - Track arm rates - 5 fps (1.52 m/sec) [approx 1 deg/sec (0.017 rad/sec)]	- Recognize patterns/forms - Estimate distance and depth - Estimate effector rates	- Identify markings and shapes; resolution, 0.2 in. (0.51 cm) - Resolution, 0.2 in. (0.51 cm) - Resolve relative rates to 0.05 fps (1.52 cm/sec)
Removal	- Uncover module - Stow cover - Remove obstructions - Inspect module - Attach safety tether - Break connections - Stow connections - Break holddown con-connection - Contact module - Remove module - Handle module - Stow module - Release safety tether	- 0.2-in. (0.51-cm) position - 3D - Same as above - Same as above - Resolution, 0.05 in. (0.13 cm) - 0.2-in. (0.51-cm) position - 3D - Resolution, 0.05 in. (0.13 cm) - 0.2-in. (0.51-cm) position - 3D - 0.2 in. (0.51-cm) position - 3D - 0.2-in. (0.51-cm) position - 3D - Offsets, 0.1 in. (0.25 cm) - Track motion - 0.2-in. (0.51-cm) position - 3D - 0.2-in. (0.51-cm) position - 3D	- Identify latches - Estimate 3-dimensional clearances - Verify latch disengagement - Estimate 3-dimensional clearances - Discern obstructions - View entire housing - Identify stowage location - Estimate 3-dimensional clearances - Verify latch engagement	- Form recognition - Attitude accuracy, ±3 deg (±0.052 rad); position to ±1 in. (±2.54 cm) - TBD - Accuracy, 0.2 in. (0.51 cm) - View work site for possible obstructions - View work site for obstructions - Attitude accuracy, ±3 deg (±0.052 rad) - Position to ±1 in. (±2.54 cm) - Identify markings & shapes; resolution, 0.2 in. (0.51 cm) - Attitude accuracy ±3 deg (±0.052 rad) - Position to ±1 in. (±2.54 cm) - TBD
Replacement	- Attach safety tether - Contact replacement module - Unstow module - Translate module - Replace module - Attach holddown connection - Release safety tether - Unstow connectors - *Attach connectors* - Unstow cover - Replace cover		- Identify replacement module - Identify latches - Estimate 3-dimensional clearances - Verify latch disengagment - View module while moved into position - Align module in housing - View entire opening - View module as it is emplaced - Pattern and form recognition - Detect faults - View entire area - View obstructions - View manipulators - Estimate rates - Maintain spatial orientation - Estimate 3-dimensional position	- Identify markings and shapes; resolution, 0.2 in. (0.51 cm) - Form recognition - Attitude accuracy, ±3 deg (±0.052 rad) - Position to ±1 in. (±2.54 cm) - TBD - Attitude accuracy, ±3 deg (±0.052 rad); views to allow 3-D positioning to ±3 in. (±7.62 cm) - Attitude accuracy, ±3 deg (±0.052 rad); views to allow 3-D positioning to ±1 in. (2.54 cm) - Attitude accuracy, ±3 deg (±0.052 rad); position to ±1 in. (±2.54 cm) - Identify shapes; resolution, 0.05 in. (0.13 cm) - Resolution, down to 0.05 in. (0.13 cm) - View working volume - View work site for possible obstructions - Views to allow 3-D positioning to ±3 in. (±7.62 cm) - Attitude accuracy, ±3 deg (±0.052 rad) - Retain overall view - View for 3-D positioning of ±1 in. (±2.54 cm)

B. VISUAL GUIDELINES AND IMPOSED REQUIREMENTS

1. The visual system will consist of the sensor, its associated onboard components (optics, data processing equipment, deployment mechanisms, control elements, etc), and the corresponding display and control elements at the remote control station.

2. Any object whose smallest dimension is 0.0625 in. (1.59 mm) or greater and which appears in a field of view with a 1:1 magnification and a contrast ratio equal to or greater than 1.5:1 shall be identifiable by the operator.

3. Illumination will be by direct or reflected sunlight, or by artificial light sufficient for 40 ft-lamberts (137 Cd/m^2) from the base of the working volume.

4. The console for the system output display shall have a surface area no greater than 400 sq in. (2581 sq cm), and shall be designed for viewing at a distance of 18 to 24 in. (46 to 61 cm) from the eye of the operator. The light output from the display shall be sufficient for normal observation in an ambient operator light of 40 ft-candles (431 lux).

5. The system's field of view shall accommodate the entire working volume of the manipulators, based on typical teleoperator manipulator activity during the satellite inspection, maintenance, and retrieval missions.

6. Commonality should be considered for all applications in earth orbit.

7. Manipulator controls are of three general types with many variations (i.e., exoskeleton, switch box, hand controller, analog replica, etc). The functions will be identified whenever the controls of the manipulative device interface with the display and controls of the viewing system.

8. The design should show operating feasibility for each element of the system. Some breadboarding may be required during the preliminary design phase.

9. The design shall reflect state-of-the art technology applicable to a final design in the 1975 time frame.

In addition, three other aspects of the system are of great importance: (1) the integration of the controls of the visual sensor and the manipulator under operating conditions; (2) the integration of the visual display with the other data display at the man-machine interface; and (3) the FFTO system baselined for this study, which is defined in Ref 2.

C. FFTO CHARACTERISTICS

The FFTO maneuvering and stabilization characteristics, based on Ref 2, are shown in Tables III-3 and III-4, respectively.

Table III-3 FFTO Free-Space Maneuvering Characteristics

HOW:	Sixteen Thrusters at 5 lb (22.2 N) Thrust Each and 1.8 ft-lb-sec (2.44 J-sec) Control Moment Gyros (CMGs) Range - Range Rate Radar TV-Line of Sight Guidance Man in the Loop-Remote Console Operation 6 Degrees of Freedom Control Thrusters for Translation and CMG Desaturation CMGs for Attitude Control
HOW SLOW:	Translation - 0.02 ft/sec (0.61 cm/sec) minimum bit Attitude - essentially zero (CMG Mode)
HOW FAST:	Translation - X Axis 1.43 ft/sec^2 (0.44 m/sec^2) - Y, Z Axis 0.72 ft/sec^2 (0.22 m/sec^2) Attitude - Roll 39 deg/sec^2 (0.681 rad/sec^2) (Thruster Mode) - Pitch 38 deg/sec^2 (0.663 rad/sec^2) - Yaw 41 deg/sec^2 (0.716 rad/sec^2)
HOW FAR:	0 to 10,000 ft (0 to 3048 m) from Shuttle
HOW LONG:	2.5 hr/mission without battery recharge, 15,000 lb-sec (66,723 N-sec) total impulse with battery recharge
HOW FLEXIBLE:	Translation Modes • Command Acceleration • Minimum Bit • Range Hold Attitude Modes • Discrete Level Rate/Attitude Hold • Command Acceleration • Proportional Rate/Attitude Hold Malfunction Mode • 3 Rotational, 2 Translation Degrees of Freedom Circumnavigation • Combine Range Hold and Manual Attitude Control Modes

Table III-4 FFTO Stabilization Characteristics

HOW:	Radar Range Sensor Rate Gyro Attitude Rate Sensor Control Torques by - Reaction Jet Thrusters - Control Moment Gyros 5 Modes (1) - Direct Acceleration Commands (2) - High-Level Command Rate (3) - Low-Level Command Rate (4) - High-Level Proportional Rate (5) - Low-Level Proportional Rate			
WHAT RATE:	Mode	Angular Rate, deg/sec (rad/sec)		
	(1)	Unlimited		
	(2)	6.0 (0.105)		
	(3)	2.0 (0.035)		
	(4)	0.0-6.0 (0.0-0.105)		
	(5)	0.0-2.0 (0.0-0.035)		
WHAT ACCURACY:	Mode	Residual Rate, deg/sec (rad/sec)	Control Threshold	
	(1)	Manual [0.3 deg/sec (0.005 rad/sec) minimum]	Manual	
	(2)	0.3 (0.005)	±10.0 deg (±0.175 rad)	
	(3)	0.1 (0.002)	±1.0 deg (±0.017 rad)	
	(4)	0.1 (0.002)	±1.0 deg (±0.017 rad)	
	(5)	0.1 (0.002)	±1.0 deg (±0.017 rad)	
	Range Hold		±10.0 ft (±3.05 m)	
HOW FAST:	Mode	Angular Acceleration, deg/sec^2 (rad/sec^2)		
		Pitch	Yaw	Roll
	(1)	20 (0.349)	20 (0.349)	37 (0.646)
	(2)	20 (0.349)	20 (0.349)	37 (0.646)
	(3)	0.39 (0.007)	0.39 (0.007)	0.74 (0.013)
	(4)	0.39 (0.007)	0.39 (0.007)	0.74 (0.013)
	(5)	0.39 (0.007)	0.39 (0.007)	0.74 (0.013)

IV. VISUAL SYSTEM CONCEPTS

The design of a visual system depends on the specific requirements of the application involved. Size, weight, and bandwidth limitations must be weighed against the amount of visual information required by the viewer. Consequently, a major factor that must be considered in developing such a system is the degree of commonality between the actual information available to the sensor and the information relayed to the viewer. The information parameters available to the sensor include intensity, color, coordinate information, phase information, field of view, and parallax. The number of parameters relayed to the viewer initially depends on the acquisition capability of the sensor. To detect all of the above parameters in a manner comparable to direct vision, the sensor must acquire and transmit any information capable of human visual perception; i.e., intensity, color, stereo parallax, etc. A display system must then be designed to present all the available visual information to the viewer in a manner most compatible with normal human vision. The display design must therefore consider apparent field of view, display brightness, display-to-viewer distance, eyestrain, freedom of movement, ease of image registration, and resolution. The loss or reduction of any of these parameters will result in a reduction of the operator's visual realization of the scene.

Visual systems vary significantly in sophistication, and range from direct viewing to indirect concepts such as holography.

A. VISUAL SYSTEM CONCEPT 1: DIRECT VIEWING

This concept, illustrated in Fig. IV-1, consists of direct vision by the operator through windows located at the control station. This particular concept is the simplest, and probably the most acceptable to the operator because it is a natural and reliable system, but it has two severe limitations. First, the field of view is easily obstructed and it requires the operator to be physically close to the working volume. Based on the FFTO general requirement of operational distances ranging up to 3048 m (10,000 ft), this concept cannot be considered the primary visual system.

B. VISUAL SYSTEM CONCEPT 2: TELEVISION

Television systems, shown typically in Fig. IV-2, have proven very effective as indirect visual systems. Their resolution, bandwidth, power, and mass requirements are quite satisfactory for use in space. In fact, several types of TV sensor tubes have been and are currently being produced for space application. These tubes are either of the vidicon or image orthicon type. The basic vidicon tube suffers from insensitivity, and both types exhibit lag, which causes a "smearing" of the displayed picture for fast-moving objects. Improved versions presently under development offer high resistance to damage and excellent visual information transfer.

The successful use of monoscopic TV as indirect visual systems has been demonstrated in numerous applications on earth and in a space environment. From a visual information standpoint, however, a stereoscopic system is more comparable to direct vision than a monoscopic system since stereoscopic depth perception is conveyed to the viewer. One must recognize that if resolution and field of view are held constant, a stereoscopic system will require twice the power, bandwidth, mass, and volume of a monoscopic system. If the latter parameters are critical, single-camera stereoscopic TV system using a split-image field can be developed by sacrificing some resolution and field of view. However, based on operator performance and task requirements, a single stereoscopic system may be equivalent to a monoscopic system needing two views (sensors). Consequently, both monoscopic and stereoscopic TV systems must be given strong consideration.

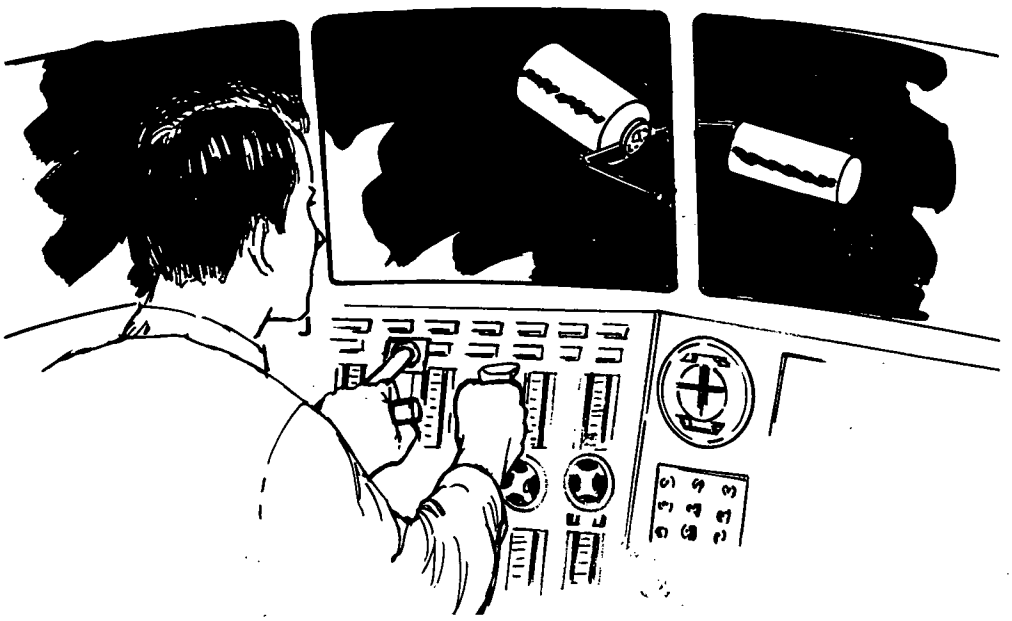

Fig. IV-1 Direct View Concept

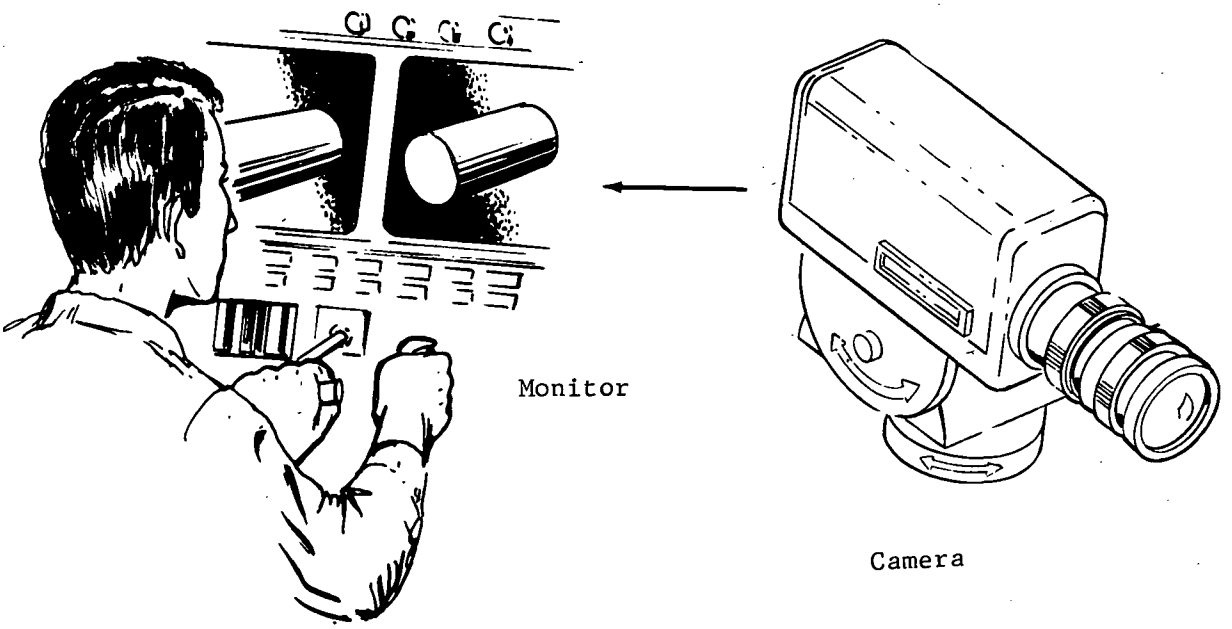

Fig. IV-2 Television Concept

C. VISUAL SYSTEM CONCEPT 3: COMPUTER-GENERATED TV DISPLAY

Another visual concept is the computer-generated TV display. This display can be programmed to convert sensor range information -- obtained, for example, from an optical mapping radar sensor, as shown in Fig. IV-3 -- into cathode-ray-tube intensity and contrast variations.

This concept, although presenting a visual display with pseudo-depth information, could be combined with actual numerical information displayed digitally. This information might consist of FFTO-Shuttle-Satellite relative geometry, range-range rate envelopes, and manipulator-arm positions. In addition, considerations include having the computer draw the display aids required for ranging and alignment laid over the video image of the target. Therefore, it must be recognized that while a computer-generated display might play an important part in the total visual system, if such a system is required, it should be specifically provided as a supplement to the more straightforward TV system concept.

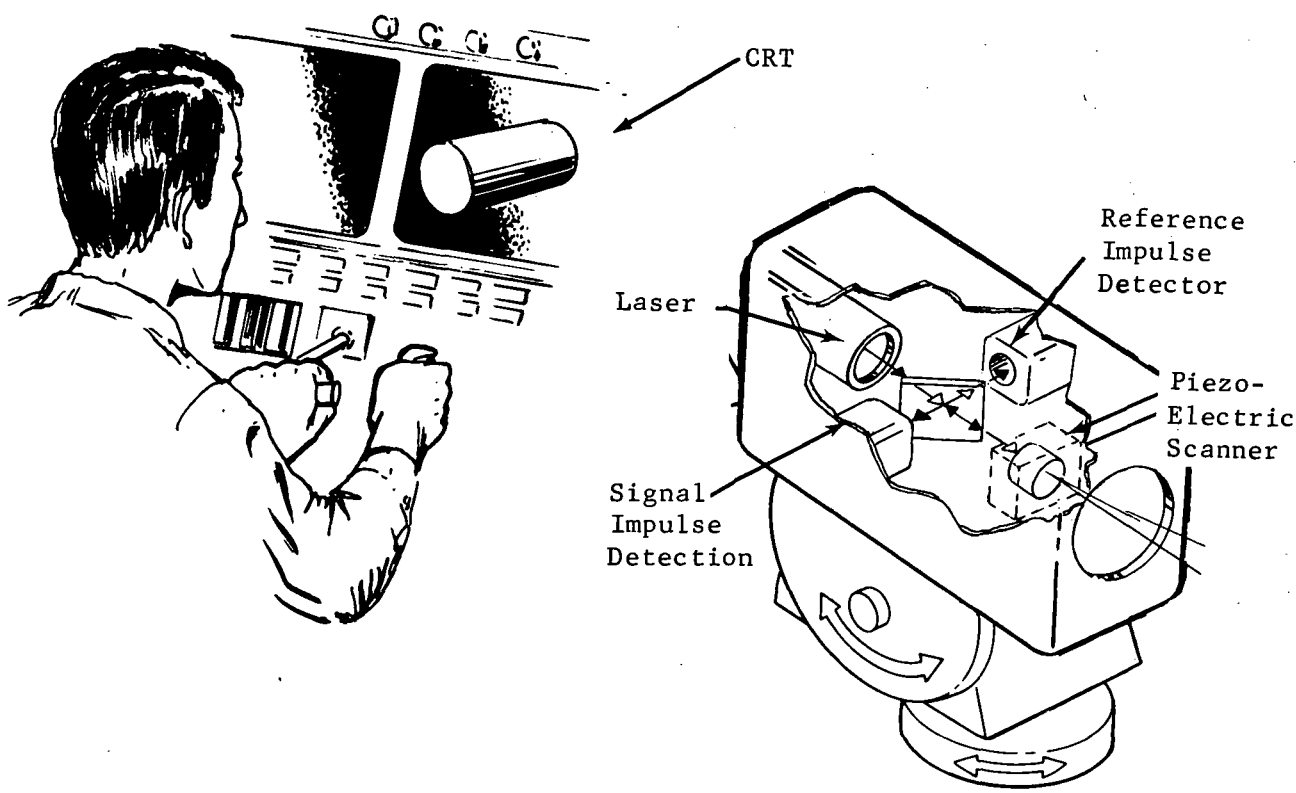

Fig. IV-3 Computer-Generated TV Display Concept

D. VISUAL SYSTEM CONCEPT 4: HOLOGRAPHY

Holography is theoretically the most complete sensor available in that it records both amplitude and phase information about each point in the field of view. However, the phase information is of little benefit since the human eye is a square-law detector and has no means of perceiving phase. Also, it is likely that a holographic sensor subsystem would be monochromatic, and would therefore provide no color information.

Figure IV-4 shows a holographic sensor system concept. Intense coherent radiation is supplied by the optically amplified pulsed laser mounted adjacent to the camera. The hologram might be recorded on erasable film and processed in a heat cavity. The film could then pass by a laser scanning system that reads the film and transmits the information. Afterward, the film could be erased and recycled.

The various aspects of holography as an indirect visual system involve developmental recording media, film readers, and erasing techniques. Some of the more promising recording media and film readers are described in the following paragraphs.

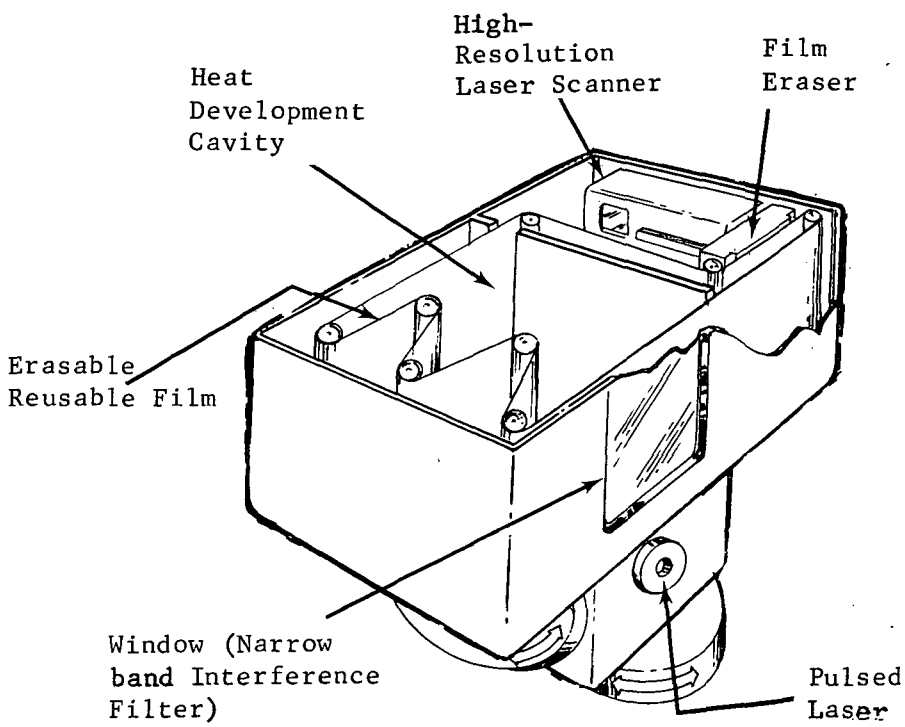

Fig. IV-4 Holographic Sensor Concept

1. Recording Media

a. Free-Radical-Dye Films - Free-radical photographic films are principally used in duplicating aerial negatives, electron beam recording, and camera or picture-taking applications. The latent images are developed by being irradiated for a few seconds with uniform illumination that is within the absorption wavelength of the dye and outside its initial spectral sensitivity. The films are fixed by heating then in a small oven near 120°C for 3 minutes.

Free-radical-dye films are inherently less grainy than silver-halide films and have inherently higher resolutions -- in excess of 1500 lines per mm. However, after they have been initially prepared, their shelf life is limited, and ranges from only a few days at normal room temperatures to a few weeks when refrigerated. Thus, their great advantage in being able to use dry processing to develop the latent images into visible images is largely negated by the need to use only freshly prepared films. In addition, such films are not reusable.

b. Photoplastic Films - There has been some development of recording on photoplastic film. However, the process is slow, has inherently low resolution, and requires complicated systems (including Schlieren optics) for readout. It is not applicable to the present purposes at the current state-of-the-art.

2. Film Readers

a. Flying-Spot Scanners - Flying-spot scanners are not new in concept. In a typical embodiment, a precision high-intensity cathode ray tube with a screen diameter of about 10 cm (4 in.) is used to produce a small spot of light. This spot can be placed accurately at any of approximately 16×16^6 points in a square raster on the tube screen (4096 x 4096 points), in any addressable sequence of scan pattern. If the tube screen is now imaged by an optical system onto film-stored data, the light passing through the film will be modulated in accord with the stored data. This modulation, in turn, is read by a photosensitive detector behind the film, and the resulting electrical signal can be telemetered at any desired data rate. In this system, the telemetry rate is determined by the scanning speed and limited by the persistence of the tube screen. This is a relatively inefficient process, in that only about 1% of the light produced in the spot can reach the film. Furthermore, the size of the light spot will suffer from lens aberrations and diffraction. Finally, the cathode ray and photosensitive detector apparatus is relatively large and requires considerable power.

b. Electron-Beam Scanners - Some of the limitations of flying-spot scanners can be overcome by electron-beam scanners, but with the substitution of other problems. In this concept, since an electron-beam is used directly to scan the film, the specially prepared film must be scanned in a high vacuum. This gives rise to a host of mechanical, power supply, and environmental problems, especially since film processing is also required.

c. Laser Beam Scanners - Since the coherent and monochromatic properties of laser beams make it relatively easy to produce diffraction-limited optical systems for these light sources, high-resolution scanners are possible with lasers. Mechanical mirrors can deflect the light beam at rates consistent with planetary-distance communication data rates, and electro-optical crystal "beam-bending" techniques can produce high data rates. Exacting mechanical tolerances, weight, and power are usually the major problems encountered with these concepts in spacecraft situations.

Based on the above discussions, it is apparent that holography is a developmental technology not applicable to indirect visual systems. Resolution requirements, film speed, and other recording media requirements have not yet been achieved, and it is questionable whether available film readers are capable of resolving holographic imagery. In light of the developmental nature of holography and its possible system components, it cannot logically be considered an indirect visual system candidate based on the general requirement of a "final design" in the 1975 time frame and a subsequent 6-9 month development period.

E. CONCEPT RECOMMENDATIONS

Present holography and computer-generated-display technology is far behind TV technology for indirect visual systems. Holography systems are highly developmental, even in their components, and high transmission bandwidths are inevitable with holographic techniques. Computer-generated displays may prove very useful for object location and/or orientation, in addition for obtaining range and range rate information. However, they do not convey enough true visual information to justify their use in a primary visual system.

The present technology level of TV cameras, display tubes, and components is extremely advanced in its application to indirect visual systems, and is the only logical choice for the FFTO visual system.

V. TV SYSTEM CONCEPTS

The considerations in Chapter IV show that a TV system is the most effective and efficient means of indirect vision for teleoperator applications. Selecting the specific TV system or systems depends on the general requirements of the visual systems and the complexity of the candidates. The following sections discuss several possible TV system concepts.

A. MONOSCOPIC TELEVISION SYSTEMS

Investigations of indirect visual systems have concentrated on monoscopic systems because of their inherent simplicity. A monoscopic TV system optimizes resolution, bandwidth, power, mass, dimensions, and controls with minimum complexity. Intensity, x-y coordinate information, field of view, and resolution are all relayed to the viewer with minimal reduction

Several types of TV sensor tubes have previously been used in space and space simulation applications and are presently undergoing further development to correct their apparent shortcomings. Improved image orthicon tubes, called image intensifier orthicons (ITOs), are being developed to reduce the lag inherent in basic vidicons, but they are delicate and difficult to manufacture. The secondary electron conduction (SEC) vidicons used extensively during the Apollo missions offer higher sensitivity (approaching the image orthicon), yet are more rugged and have improved lag characteristics. The most recent sensor tube available, first used on Apollo 15, is also a vidicon but has a silicon intensifier target (SIT) that is highly resistant to damage by direct sunlight. In addition, it exhibits a high sensitivity with low lag. The SIT vidicon is the type most applicable for the severe lighting conditions encountered in space. The specific tube depends on the application and environment at hand, but the camera choices are numerous.

As mentioned earlier, the only visual information not relayed to the viewer by a monocular system is stereo parallax and color. A color TV system adds a new dimension of realism and may be worth the increased power and bandwidth, depending on the application. Probably the greatest visual information loss in the monocular

system is the loss of stereo parallax, or depth perception. However, by placing a mirror in the field of view of a monoscopic TV system, the viewer is given an additional orthogonal view that provides 3-D information.

Task simulations have shown that such a mirror system -- or a second, properly positioned camera -- can greatly enhance task performance. It has yet to be determined whether the realistic visual depth perception of a properly designed stereoscopic TV system will enhance task performance over and above that achieved using an improved monoscopic system.

B. STEREOSCOPIC TELEVISION SYSTEMS

The most natural and obvious solution to the problem of depth perception is the introduction of stereoscopic disparity between two simultaneously visible images. A number of stereo techniques presently under investigation are discussed below.

1. Sensors

To operate successfully a stereoscopic TV sensor must acquire two images from different aspect angles. The most obvious configuration for achieving this is a dual-camera system that maintains standard TV resolution (see Fig. V-1). However, if reduced bandwidth, power, weight, and volume are desired at the expense of sensor resolution and field of view, the field of view can be optically split to enable the sensing of both right and left stereo fields by a single camera. Figure V-2 demonstrates how mirrors and/or prisms might be used to split the field and minimize stereoscopic distortion; the proper right-to-left image orientation is restored in the image projection system.

Note that a more complex optical system is required for the single-camera stereo TV subsystem than for the other TV subsystem. The optical train could be somewhat simplified by eliminating the image rotation elements, but such a simplification would result in distortion of the stereo-optic image and additional horizontal-field limitations. Furthermore, the resolution capabilities of even standard TV systems represent a significant visual limitation. Unless bandwidth and power requirements are extremely critical, the sacrifice in resolution inherent in a split-field system is unwarranted. Since resolution is a prime importance to FFTO performance, we will limit our evaluation of stereoscopic systems to those with a dual-camera sensor subsystem and standard TV resolution.

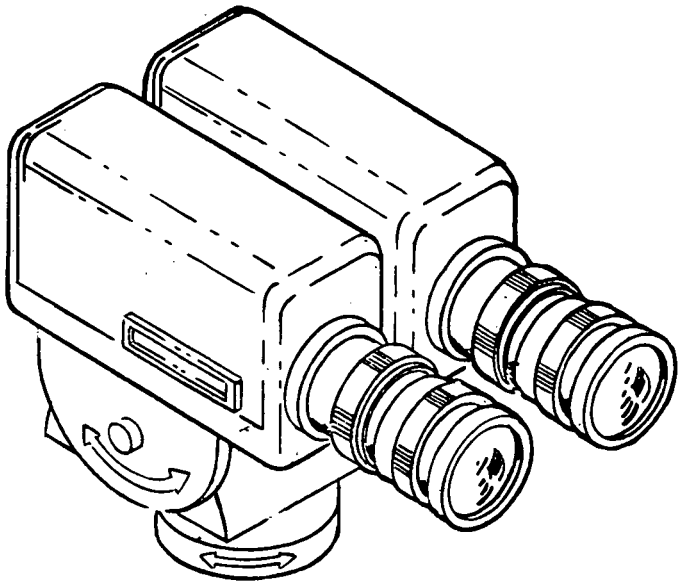

Fig. V-1 Dual-Camera Stereo System

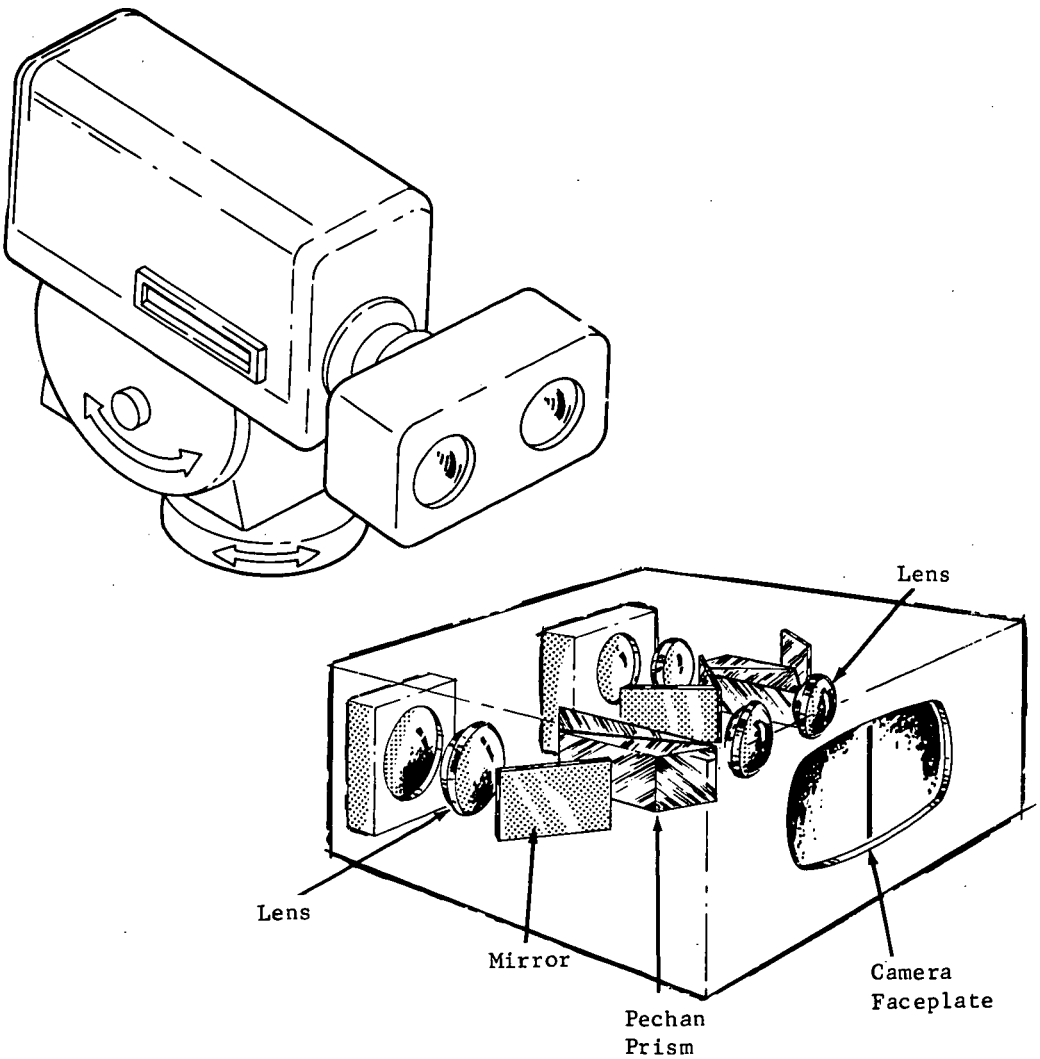

Fig. V-2 Single-Camera Stereo System

2. Display

a. Polarized Display - A well known and widely used method of stereo projection relies on using cross-polarized filters in conjunction with cross-polarized spectacles to separate the right and left stereo images. The stereoscopic display, as shown in Fig. V-3, is generated by projecting the images from the right and left TV monitors through polarized filters onto a ground-glass or liquid-crystal screen. Resolution and color information are the same as for monoscopic color TV. The viewer is not confined to seeing a small area, but if he tilts his head to the side he will see double images. The cross-polarized spectacles can cause eyestrain when viewing peripheral instruments and objects, and if the viewer has to look through any polarized windows or filters, additional eyestrain and confusion will result.

b. Color-Separated Display - The primary disadvantages of using polarized glasses can be eliminated by color-coding the two images and wearing narrowband, color-coded spectacles. This concept, illustrated in Fig. V-4, allows almost natural observation of peripheral objects but introduces increased eyestrain when viewing the display since one eye will see a red image and the other will see blue. A disadvantage of this concept is that the color information in the scene is lost. Still in all, the viewer is free to move his head in any manner without losing stereoscopic depth perception.

Both the polarization and color-separated stereo display concepts described above overcome the restriction of viewer position, but only at the expense of viewer confort, versatility, and illumination efficiency.

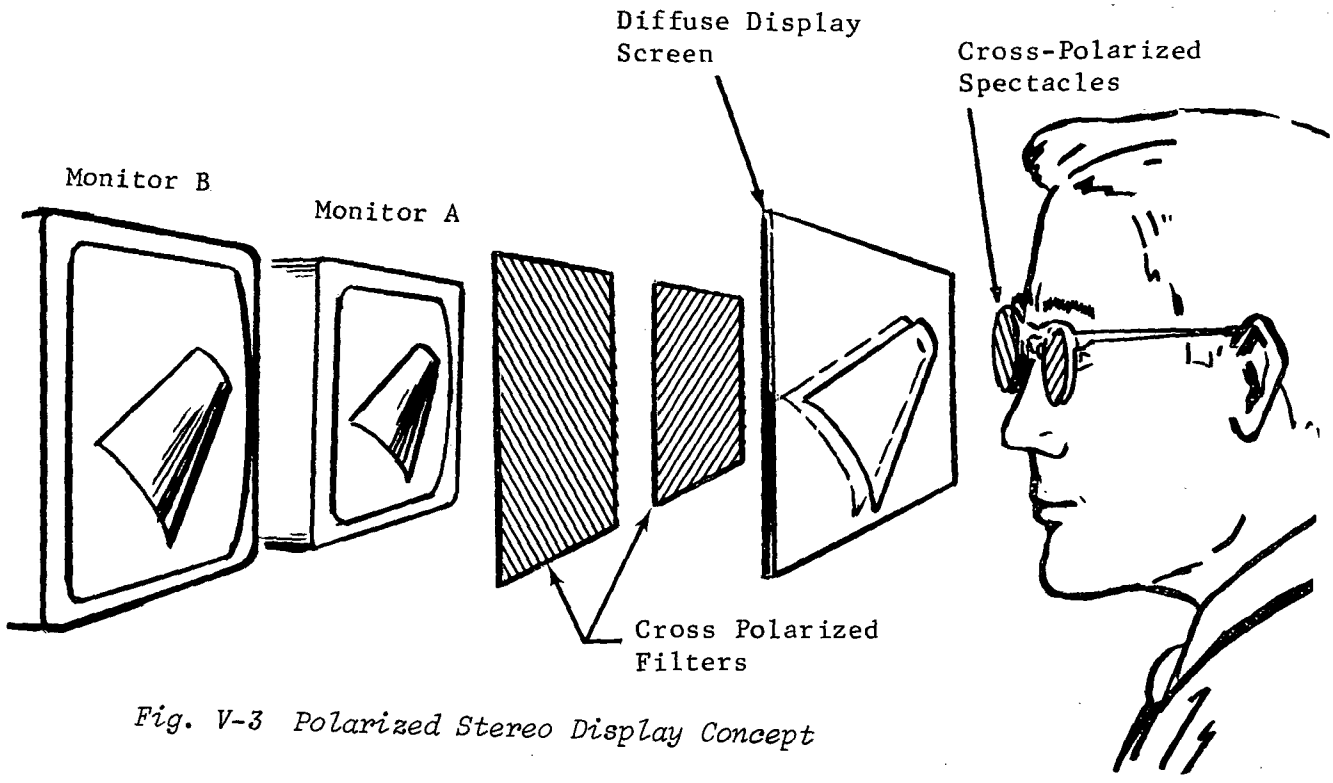

Fig. V-3 Polarized Stereo Display Concept

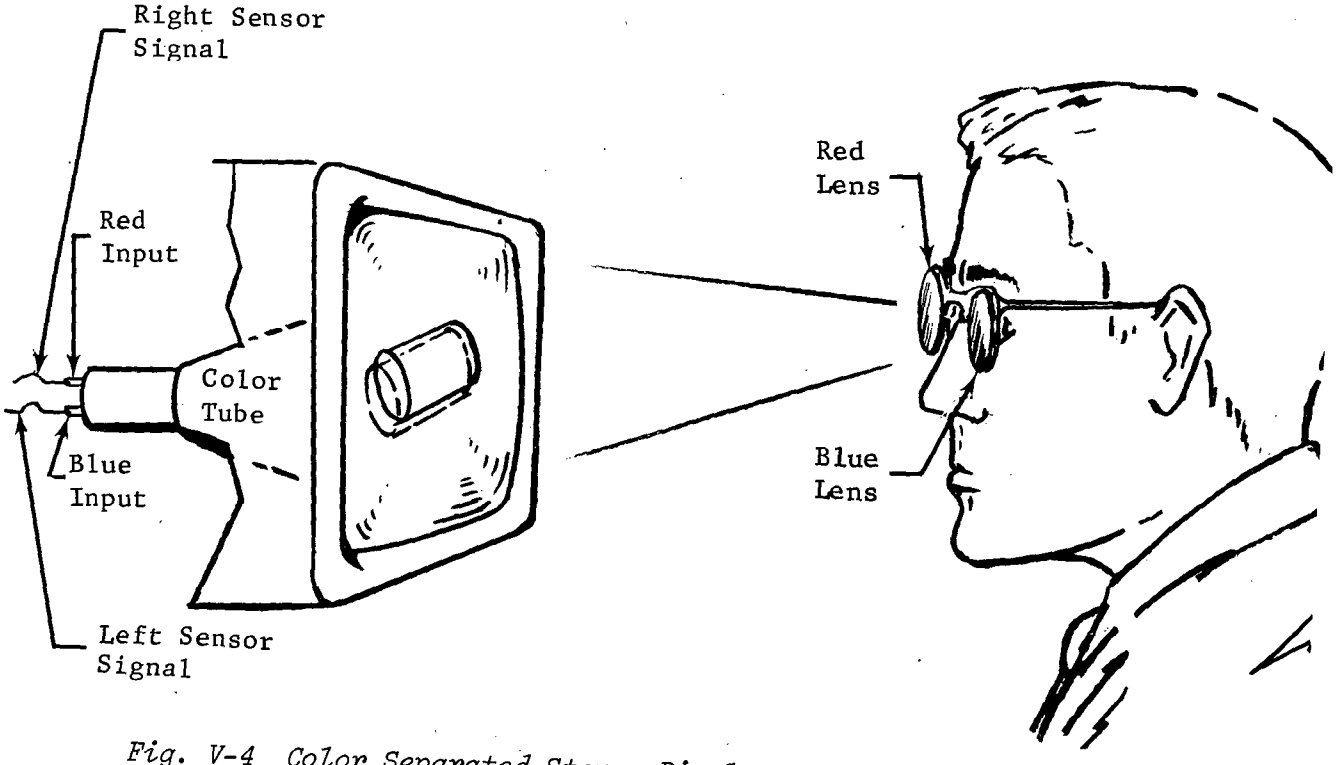

Fig. V-4 Color Separated Stereo Display Concept

c. Helmet-Mounted Display - This type of display, shown in Fig. V-5, is worn like a pair of eyeglasses, the temple pieces of which are minature cathode-ray tubes. An optics system allows objects projected onto these tubes to be seen by the user as virtual images some distance in front of him. Prisms allow the user to see both the synthetic objects and the actual furnishings and features of the surrounding environment simultaneously. Special high-speed hardware makes real-time displaying possible by continuously monitoring the position and orientation of the user's head and by continuously updating the information displayed to the user as he moves about.

Helmet- or head-mounted displays can be used to generate impressive visual effects, but again, the cumbersome headgear must be tolerated.

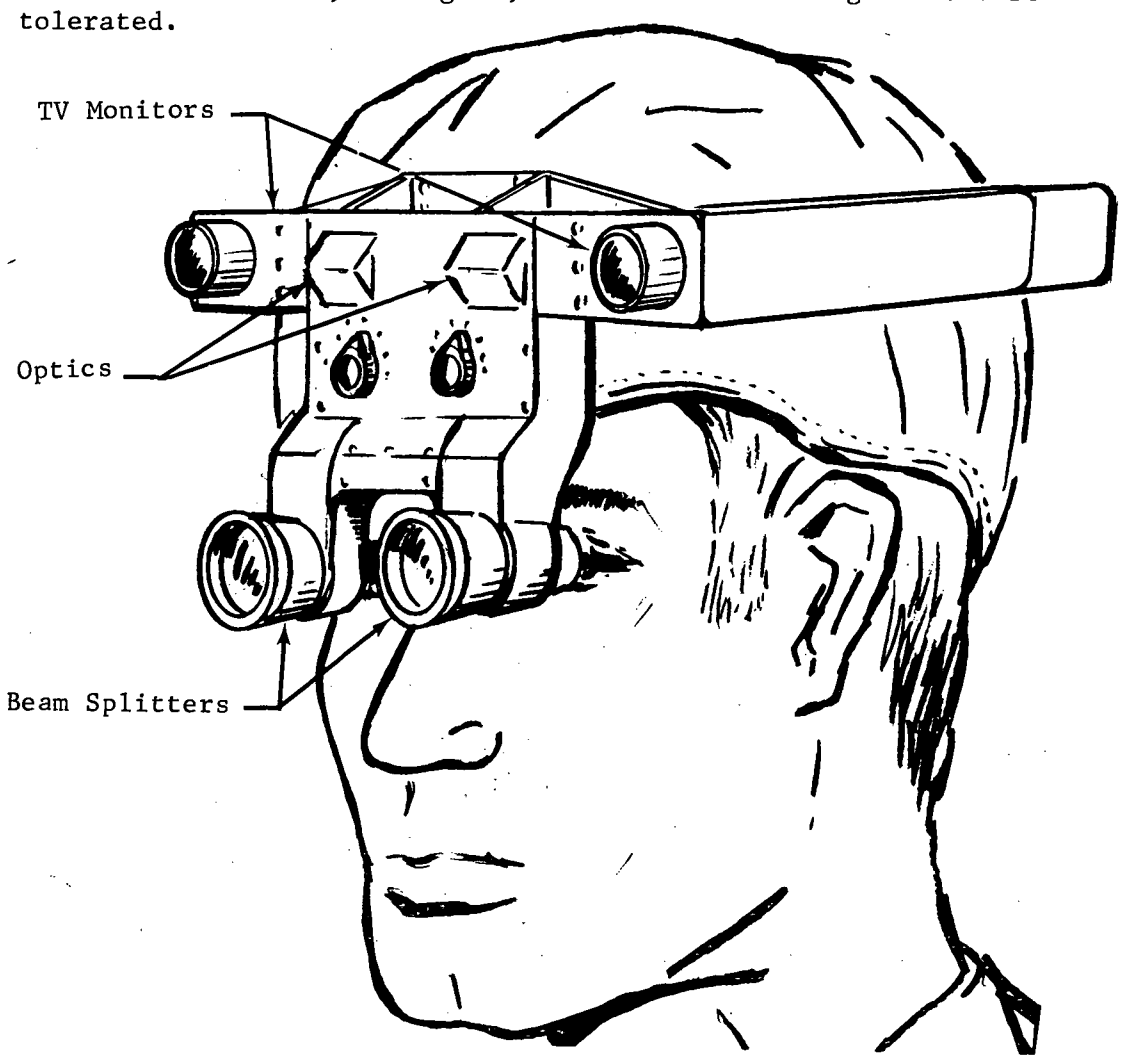

Fig. V-5 Helmet-Mounted Stereo Display Concept

d. Fresnel Display - A simple, but very realistic, stereoscopic display concept is to use two monitors (one for each stereo image), two imaging lenses, and a fresnel display screen to direct the right and left images to the corresponding eyes of the viewer (see Fig. V-6). The face of each monitor is projected through its corresponding image lens onto the fresnel screen, which acts as a field lens and forms a separate exit pupil for each image. The size and shape of each exit pupil is predetermined by the size and shape of the imaging lenses, and the display-to-viewer distance is set by the focal length of the screen.

This concept has numerous advantages over other stereo displays. Since the fresnel screen collects light over a large field and concentrates it at the exit pupils, image illumination (or power efficiency) is optimized. In addition, the apparent field of view can be designed to accommodate nearly full peripheral vision, an important comfort factor in stereo viewing. No glasses or other viewing aids are required, so random viewing of peripheral displays and instruments is natural and effortless. No refocusing of the eyes is necessary. The two optical axes cross in the image plane, providing maximum ease of stereo registration. All resolution and color information is retained and presented to the viewer in a natural way. Finally, the system is simple and compact, and is capable of occupying less space than any of the other concepts presented here.

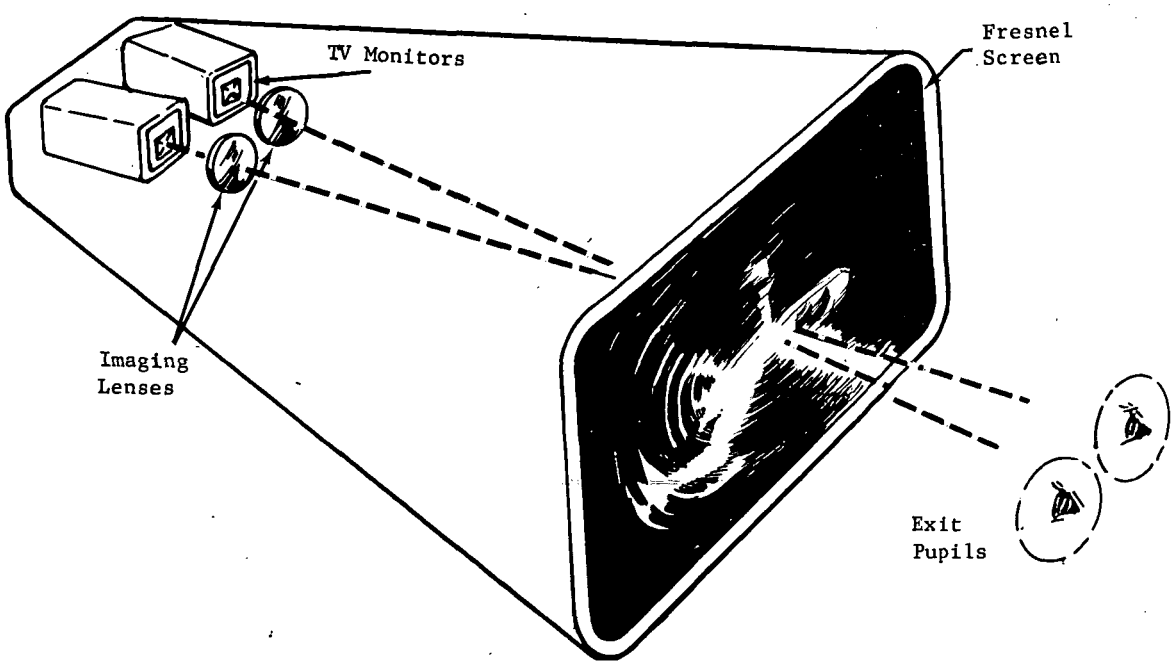

Fig. V-6 Fresnel Stereo Display Concept

The one limitation is the restriction of heat movement: the optical design of the system defines an exit pupil volume that would be limited as follows:

Horitontal Head Movement - ±3.3 cm (±1.3 in.) (defined by human interpupilary distance)

Vertical Head Movement - ±7.6 cm (±3.0 in.)

Forward Head Movement - ±15.2 cm (±6.0 in.)

If the eyes are positioned within the required volume, all visual senses are perceived in a realistic and comfortable manner, comparable to direct viewing out of a window the size of the fresnel screen.

e. Lenticular Display - The lenticular display concept is similar to the fresnel display screen, and employs two mixing grids and a diffuse display screen with a lenticular faceplate (Fig. V-7). A linear mixing grid is placed over the face of each monitor to divide the picture into strips. The images are combined via a beam-splitter and imaged onto the diffuse screen with the right and left image line elements interlaced. The lenticular faceplate then divides the right and left image line elements into zones so that a properly positioned viewer sees the stereo image.

This concept has certain advantages in common with the fresnel display screen (i.e., no glasses are required and color information is retained, etc, but resolution and field of view are reduced and image brightness is not maximized. In addition, a little more head movement is allowed than in the fresnel display concept.

A typical horizontal viewing envelope is about 15.2 cm (6 in.) at a viewing distance of 61 cm (24 in.), and a typical field of view for the system is about 20 deg (0.348 rad). The left and right images can be mixed electronically on a single monitor, but this introduces extreme linearity requirements on the TV system being used.

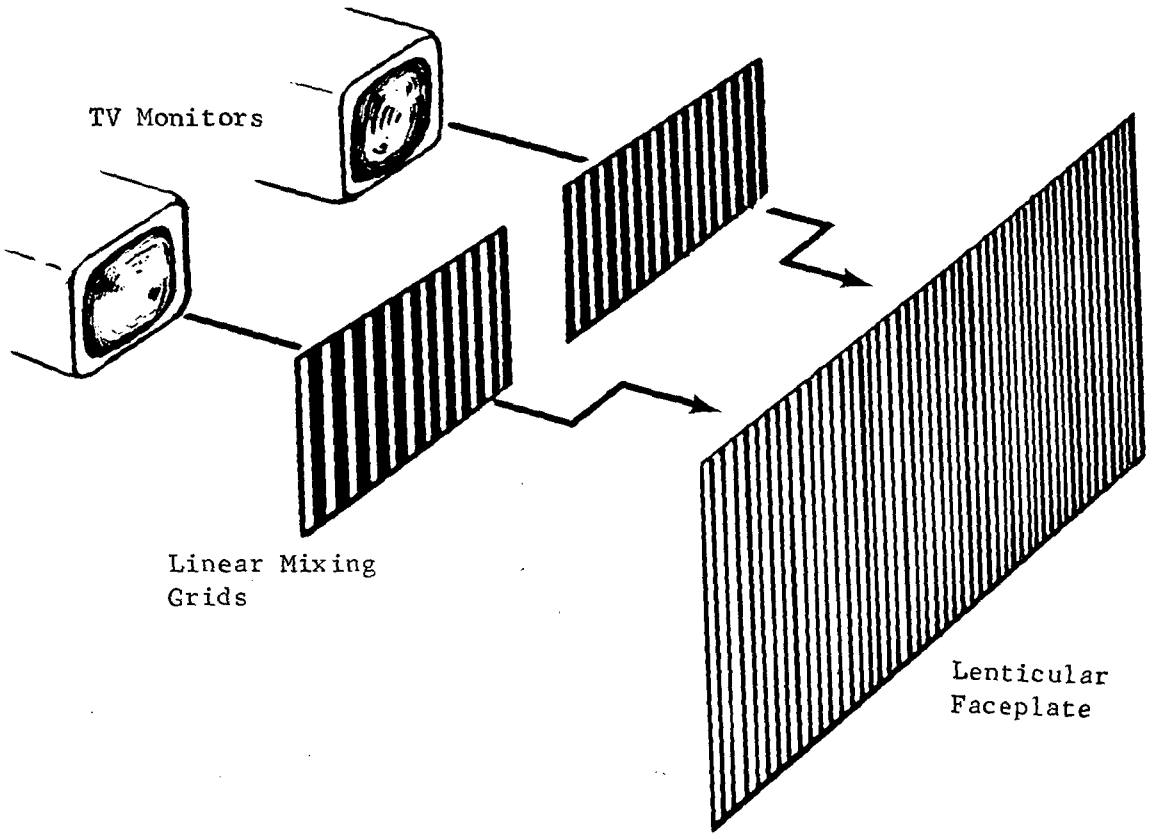

Fig. V-7 Lenticular Stereo Display Concept

C. FOVEAL-PERIPHERAL SYSTEMS

A number of indirect visual systems have been proposed to compromise between resolution and bandwidth in past applications. The most popular concept has been to match system resolution to visual acuity on the theory that, since visual acuity is greater at the central or foveal region of the retina than at the edges, the resolution of the TV system should also diminish at the edges. The fall-off in resolution can occur in steps or continuously, and can be designed to approximate the visual acuity of the eye. However, such a design assumes that the eye will have to be continuously focused on the center of the display for optimum visual performance. Some of the pertinent hybrid systems that have been proposed are described below.

1. Stereo Foveal - Mono Peripheral System

This proposed hybrid system consists of a dual display, in which a small, central portion is stereoscopic and the surrounding portion is low-resolution monoscopic. The basic approach is to reduce bandwidth requirements by matching the size of the stereoscopic display to the foveal vision of the eye. The prototype system shown in Fig. V-8, uses a wide-peripheral-field camera and a stereoscopic narrow-field camera with a system of mirrors and prisms. By coupling the zoom lenses of the cameras, their field registration is held constant.

The video output from each camera is fed into its respective display tube, and a system of lenses, mirrors and beam-splitters is then used to rear-project a real, superimposed, two-field concentric image on a screen. A liquid-crystal screen is used to obtain high resolution and a controlled scattering angle. The stereo field is divided into vertical strips of left and right subfields, and a vertical lenticular faceplate is placed over the part of the screen where the stereo portion of the display is registered.

This system has two fundamental limitations: first, a visually disturbing, image discontinuity exists at the edge of the stereo display, and secondly, the poor image quality of the peripheral field is inadequate for inspection or task performance. Consequently, an oculometer or other eye tracking device must be used to track the viewer's eye movement so that the sensor, and hence the stereo-foveal portion of the display, can be slaved to it.

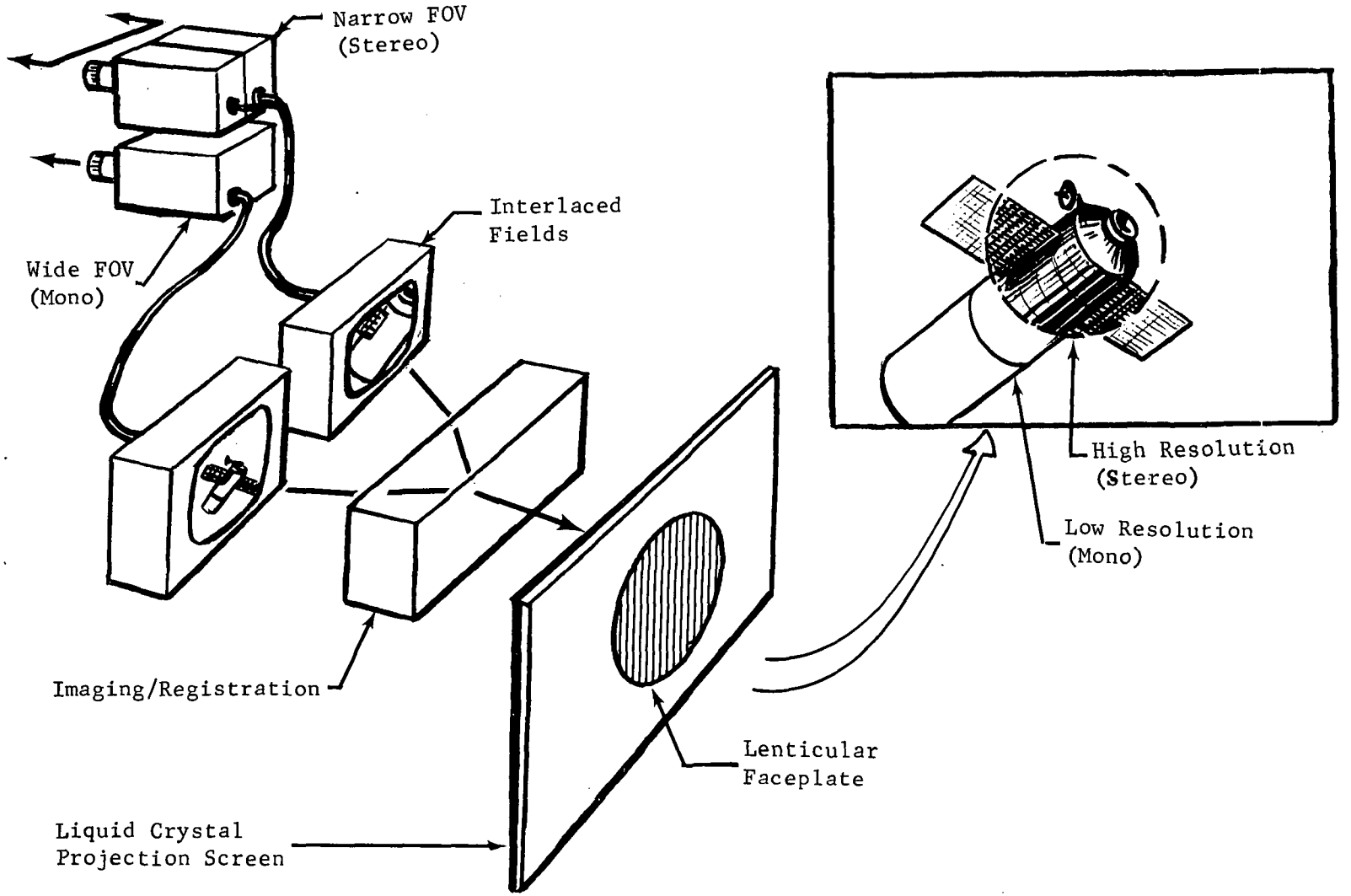

Fig. V-8 Stereo Foveal-Monoperipheral System Concept

2. Variable Resolution

This display and sensor package is similar to the stereo-foveal system, and consists of specially designed lenses that image the screen on the camera faceplate such that a higher resolution is maintained in the center of the field. A similar lens is used to project the image onto the display. These lenses, typified in Fig. V-9, are designed to approximate the resolution capabilities of the eye and apply equally to either monoscopic or stereoscopic visual systems. However, as in the previous hybrid system concept, an eye-tracking device is required to make the system practical on a real-time operational basis.

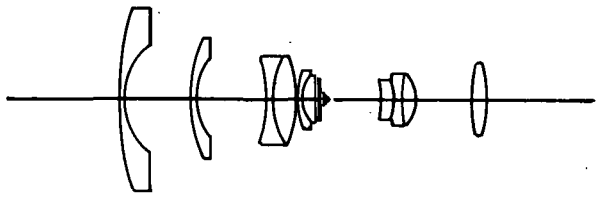

Fig. V-9 Variable-Resolution Lenses

D. SYSTEM RECOMMENDATIONS

A monoscopic TV system will provide satisfactory resolution, bandwidth, power, and mass with minimum complexity. In addition, TV system state-of-the-art is much more highly developed than that of other indirect visual systems, and numerous space-qualified TV cameras are available. Consequently, a monoscopic TV system lends itself well to FFTO application.

Stereoscopic TV adds the third dimension to a visual system at the cost of increased bandwidth and power. The ability to perceive depth may greatly facilitate the performance of certain tasks and must, therefore, be given careful consideration. The successful operation of a stereoscopic system relies heavily on the display system used to relay the image to the viewer. The fresnel and the lenticular displays are the only stereoscopic displays that do not require hoods, headgear, or glasses for their operation. Since the ability to view and operate controls and instrumentation must exist in close association with viewing the display, concepts that require visual constraints are unacceptable.

The two unrestricted displays, lenticular and fresnel, appear very promising. Both produce a comfortable stereo image, either in color or in black and white, while optimizing illumination, power efficiency, and visual depth perception. At present neither of these systems shows considerably more promise than the other. The fresnel display allows a wider field of view, but it puts slightly greater restrictions on head movement. In contrast, the lenticular display is more complex and, therefore, its alignment is more critical. A deeper investigation into these possible techniques will hopefully affect the balance between the fresnel and lenticular stereoscopic display systems. Until this is done, both must be given equal consideration.

Foveal systems are not recommended at this time due to their inherent complex requirements. However, for long-range missions, where power (and hence, bandwidth) is critical, and where operation is not on a real-time basis, this system should be reevaluated.

Therefore, three candidate TV systems are recommended for further investigation:

1) Monocular systems;

2) Stereoscopic-fresnel display systems;

3) Stereoscopic-lenticular display systems.

VI. SUBSYSTEM REQUIREMENTS FOR THE TV VISUAL SYSTEM

The subsystems incorporated in the TV visual system are shown in Fig. VI-1. Those subsystems located in the FFTO are shown on the left and those located in the remote control station are shown on the right.

The unshaded portion of the figure is generally classified as the telecommunication subsystem and the shaded portion is recognized as requiring a strong emphasis on man-machine interface considerations.

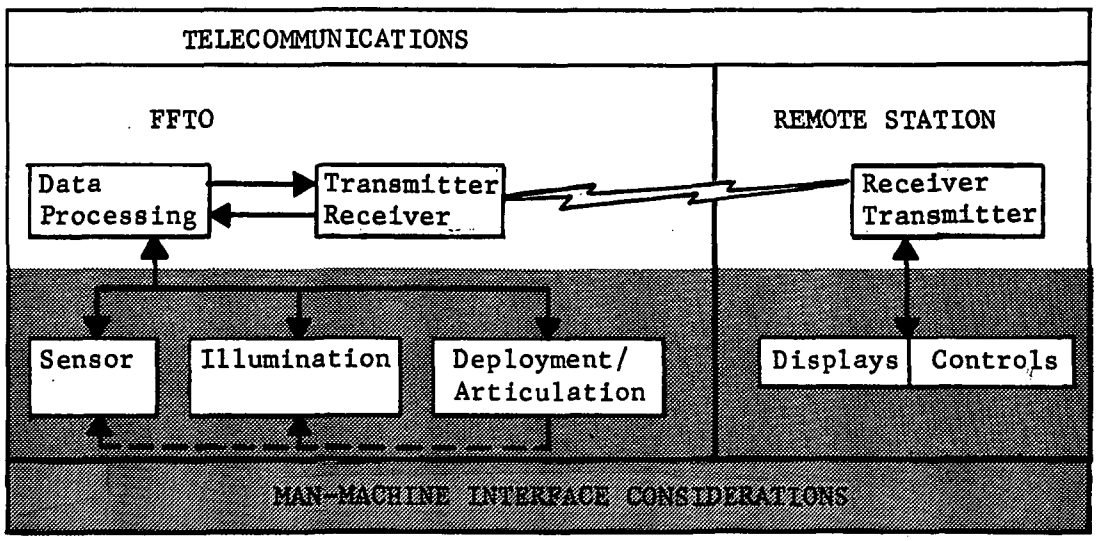

Fig. VI-1 Subsystems in the TV Visual System

When summarized at these subsystem levels, the requirements imposed by the statement of work becomes:

1) Applicable to All Subsystems:

   Reflect 1975 state-of-the-art technology

   Require limited development (6-9 months maximum)

2) Sensor Subsystem:

   Field of view shall accommodate manipulator working volume

3) Illumination Subsystem:

Provide 40 ft-lamberts (137 Cd/m^2) from the working surface

4) Display Subsystem:

Operator shall resolve an object of 1.59 mm (0.0625 in.), assuming a 1:1 magnification and a display contrast ratio of 1.5:1

Area shall be <0.26 sq m (400 sq in.)

Viewed from 46 to 61 cm (18 to 24 in.)

Ambient light of 40 ft-candles (431 lux)

5) Deployment/Articulation Subsystem:

Support sensor in accommodating manipulator field of view

6) Control Subsystem:

Recognize manipulator controller variations

Integrate visual displays with other FFTO data displays

Two additional requirements are extremely important to provide a basis for subsystem analysis independent of the total system or man-in-the-loop simulations. The first is sensor bandwidth and the second is the maximum sensor field of view.

For example, if the bandwidth required by the sensor were known, the following subsystem analyses could be accomplished: (1) an independent telecommunication subsystem study based on n sensors, where n = 1, 2, 3, etc, and (2) a study to establish the recommended display size per sensor. Once the maximum sensor field of view is established, an independent trade-off study can be conducted between the number of sensors and the complexity of the deployment/articulation mechanism required to cover the working volume/working site.

Since no definite requirements were specified for these two parameters, we made two preliminary assumptions, based on technical judgment: (1) the bandwidth required is 5 MHz per sensor, and is based on a 525-line, 30-frame/sec standard TV system, and (2) the sensor field of view is <60 deg (<1.047 rad). We then conducted an analysis to determine if any obvious impacts resulted from these assumptions and to provide some general system characteristics. The logic flow required to establish the recommended display size is shown in Fig. VI-2.

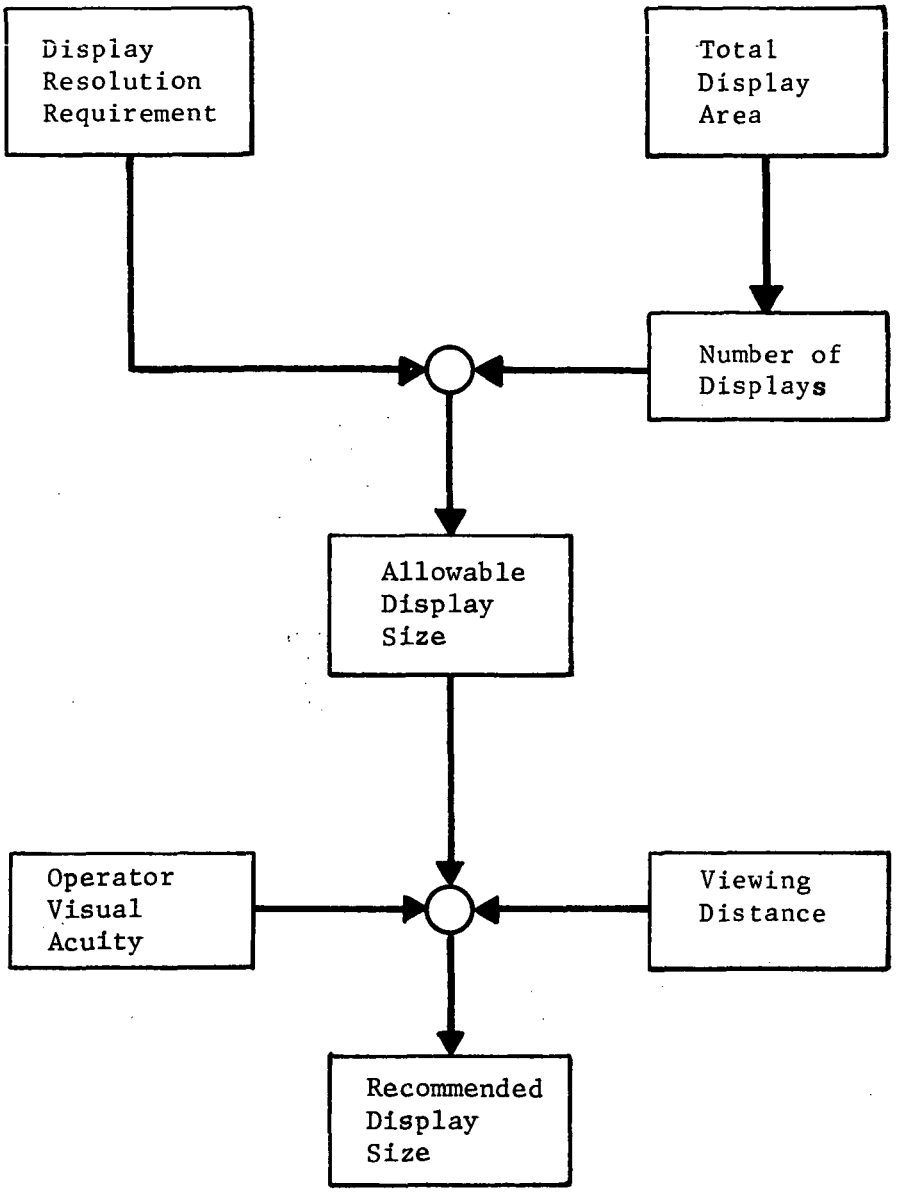

Fig. VI-2 Display Size Requirement

A. DISPLAY RESOLUTION

The system resolution requirement specifies that any object larger than 1.59 mm (0.0625 in.) must be identifiable by the operator, assuming a 1:1 magnification. Using the standard 525-line TV monitor as a display, the vertical resolution is reduced by about 7% due to the loss of lines during the blanking time between the fields. Therefore, the net vertical resolution is approximately 488 lines, and the standard TV bandwidth is based on providing about the same resolution horizontally.

In addition, experimental studies have shown that, for typical pictures, a "figure of merit" between 50% and 70% is indicative of true resolution. Taking a conservative approach by using the 50% figure, the standard TV resolution is 244 lines; i.e., the smallest object to be resolved must subtend 2 lines. Hence, with 1:1 magnification, a simple relationship exists between the display size and the resolution requirements:

Monitor Height = 244 x Object Size Resolved.

B. TOTAL DISPLAY AREA

The total display area must not exceed 0.258 sq m (400 sq in.). As the number of displays required by the visual system increases, the area allocated per display is reduced accordingly. Thus based on the total display area, and assuming a 4 to 3 monitor format,

$$\text{Monitor Height} = \left[\frac{\text{Display Area}}{\text{No. of Displays}} \times 3/4\right]^{\frac{1}{2}}$$

The two monitor height relationships from Sections A and B are shown in Fig. VI-3.

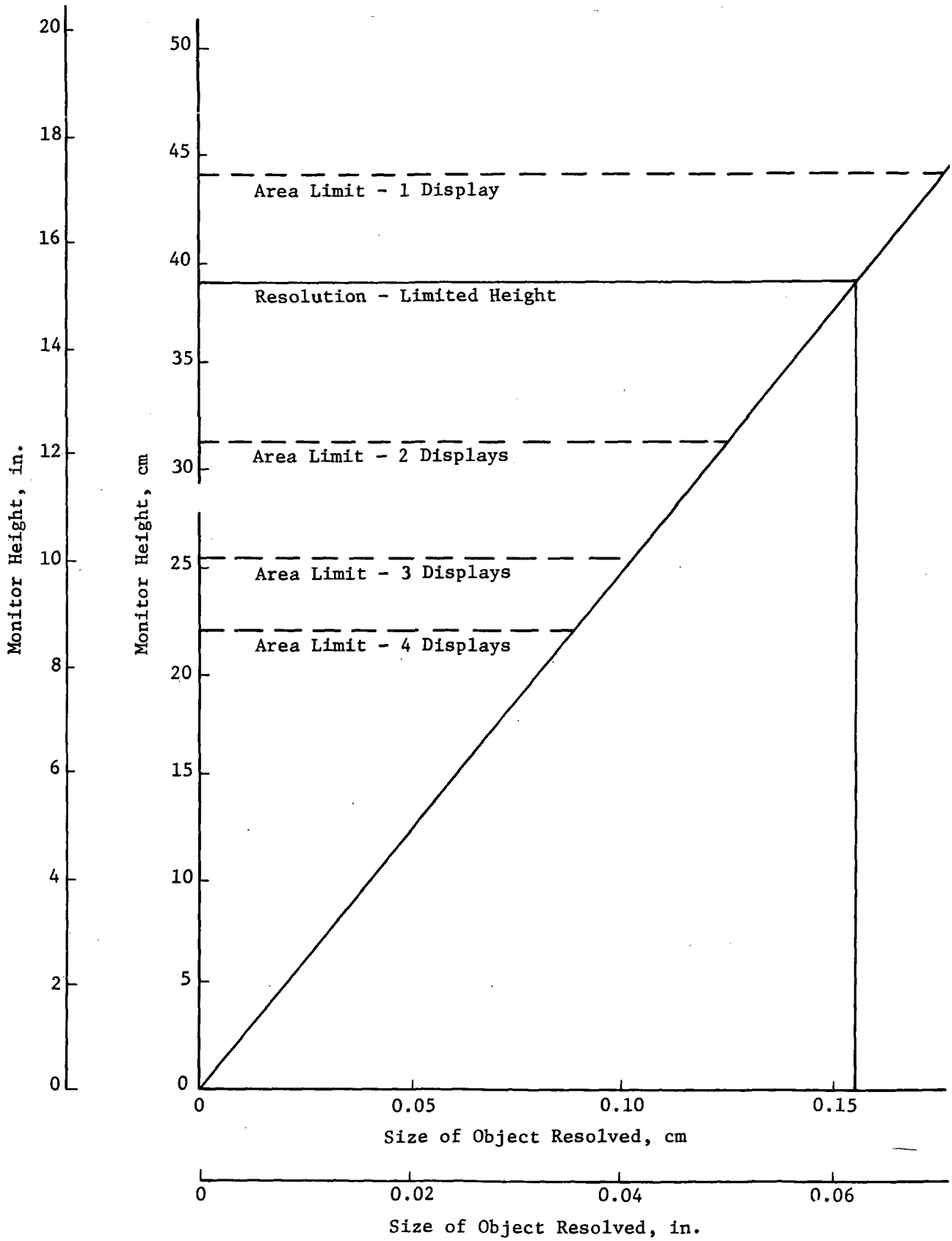

Fig. VI-3 Allowable Display Size

C. ALLOWABLE DISPLAY SIZE

The allowable display size, from Fig. VI-3, is tabulated below

No. of Displays	Maximum Display Height
1	38.8 cm (15.25 in.)
2	31.1 cm (12.25 in.)
3	25.4 cm (10.00 in.)
4	22.0 cm (8.65 in.)

Note that the maximum display height results from resolution limits, not display area constraints. The minimum display size must be based on man-machine requirements.

D. MINIMUM MONITOR HEIGHT

The ability of the operator to resolve an object is a function of the object's size and range. This relates directly to the visual angle subtended by the eye. The visual angle, α, is given by

$$\alpha = 2 \tan^{-1}\left[\frac{H}{488\ D}\right],$$

where H is the monitor height and D is the viewing distance.

Figure VI-4 shows the relationship between the visual angle subtended and the allowable display height and viewing distance. Malone (Ref 1) indicates that the threshold for operators viewing a TV display is about 5 arc-minutes (0.0014 rad). Thus, a typical monitor display (based on the average viewing distance) would have a minimum size of 19.0 ± 2.5 cm (7.5 ± 1.0 in.). Up to four monitors are acceptable to stay within the allowable display area.

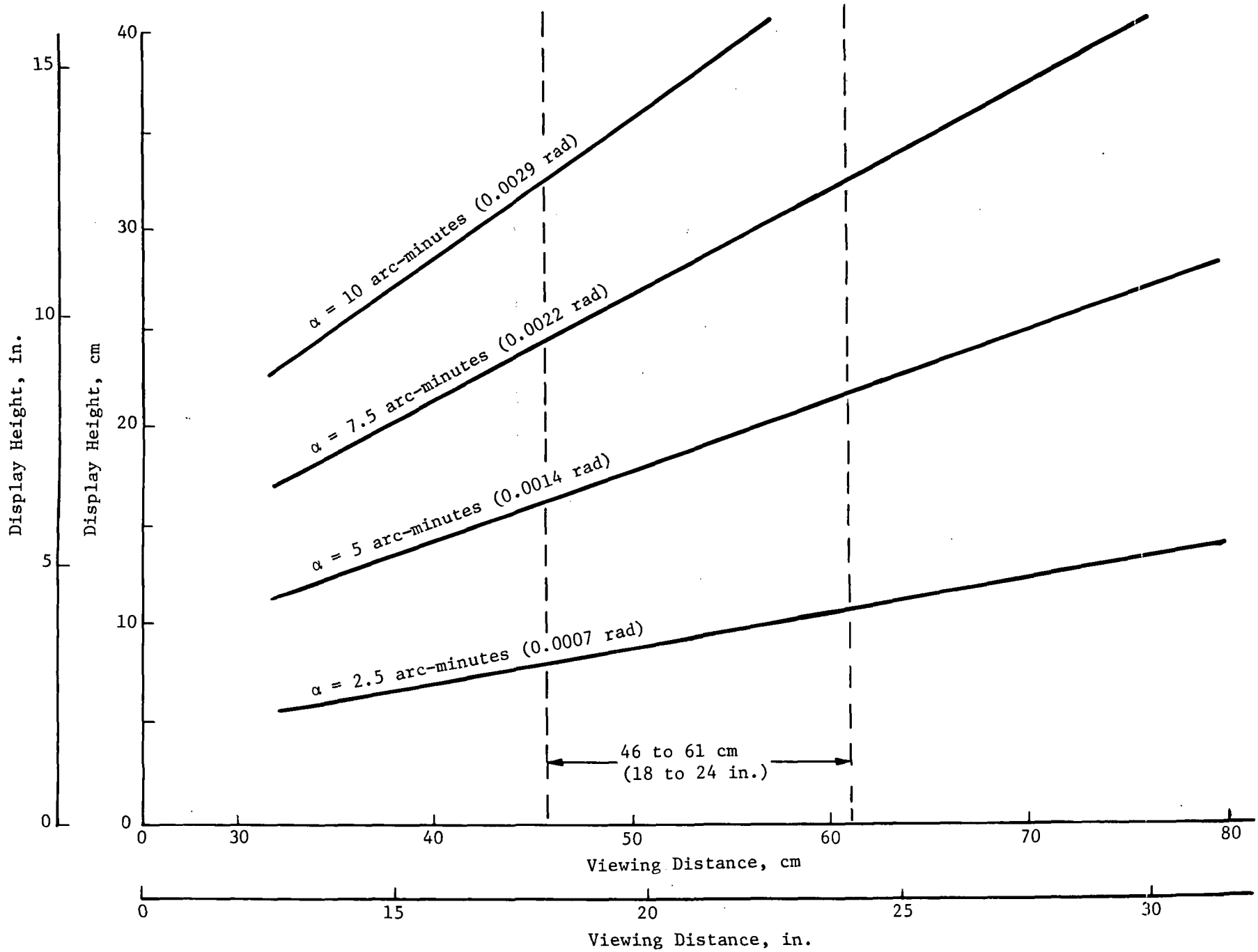

Fig. VI-4 Subtended Visual Angles

E. SENSOR FIELD OF VIEW

A 60-deg (1.047-rad) maximum sensor field of view establishes two visual system parameters: the maximum object size displayed and the theoretical minimum object size resolved at the display.

F. SIZE OF OBJECT DISPLAYED

The size of the object displayed is only dependent on the sensor-object range and is given by,

$$S = 2R \tan \left[\frac{FOV}{2}\right],$$

where S is the size of the object, R is the range to the object, and FOV is the field of view. This relationship is shown in Fig. VI-5.

G. SIZE OF OBJECT RESOLVED

The size of the object resolved on the display is a function of the display resolution. Based on the 244-line resolution,

$$\text{Object Size Resolved} = \frac{\text{Object Size Displayed}}{244}$$

This relationship is also shown in Fig. VI-5.

H. SUMMARY

The basic subsystem requirements were reviewed and are within the guidelines established for the visual system in Chapter III. Thus, the subsystem analysis will be performed on the basis of a 5-MHz sensor bandwidth and a 60-deg (1.047-rad) maximum sensor field of view. These requirements will be reviewed and modified, if necessary, at the completion of the subsystem requirements analysis.

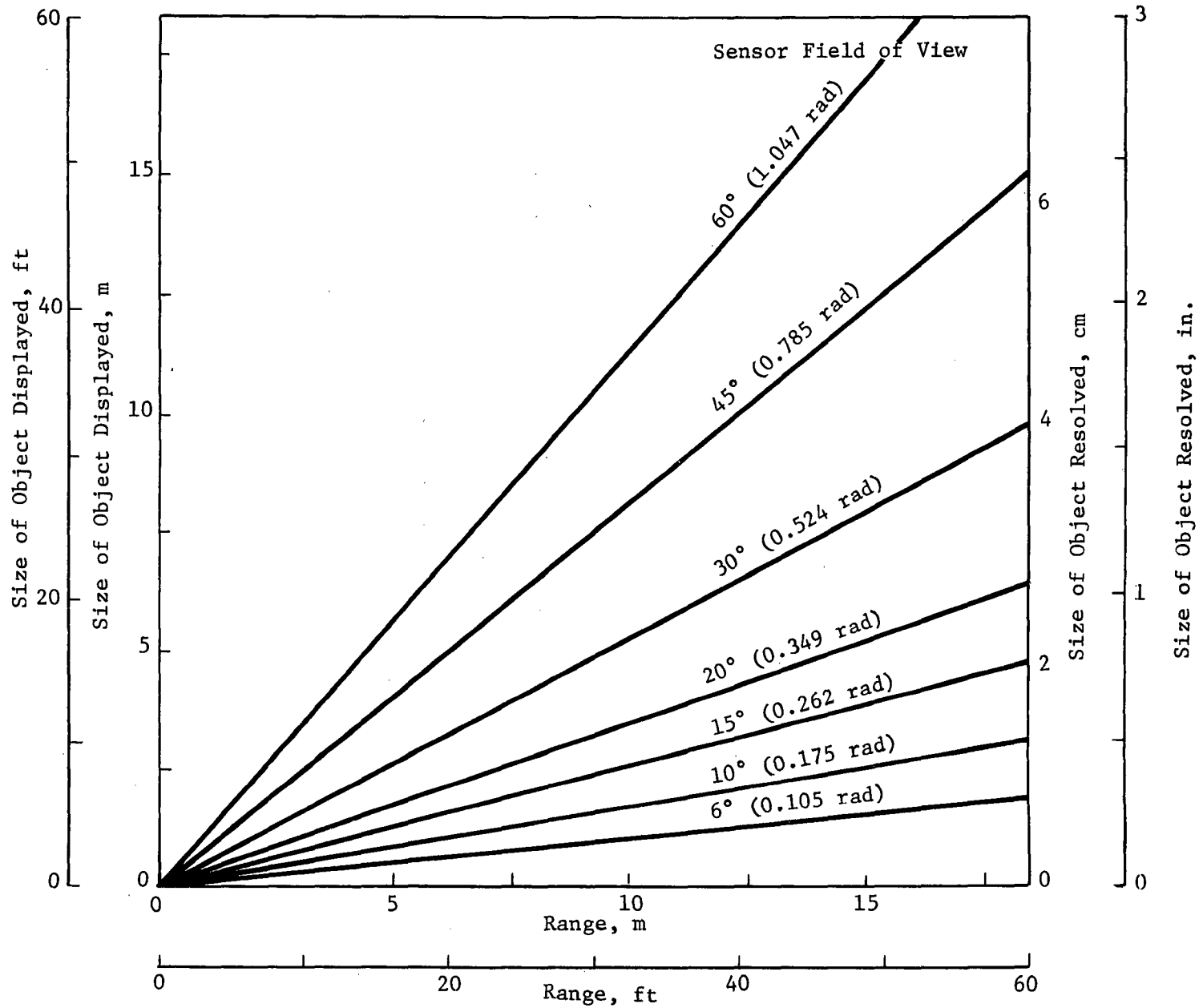

Fig. VI-5 Displayed and Resolved Object Sizes

VII. SUBSYSTEM REQUIREMENTS ANALYSIS

The three candidate approaches for satisfying the teleoperator visual requirements have many subsystem elements in common. These elements, consisting of cameras, monitors, lighting requirements, etc, can be analyzed in considerable depth. However, in some cases, such as for sensor articulation complexity or the number of views required, differences exist where an analytic solution is not possible since the requirements may be strongly influenced by the operator's performance using the monoscopic or stereoscopic systems. For example, a stereovisual system may be equivalent to two monovisual views. Therefore, the following analysis places primary emphasis on the sensor, illumination, display, and telecommunication subsystems and identifies specific areas where man-in-the-loop simulations are required. To reduce the number of stereo candidates required in a simulation program, the use of a fresnel or lenticular display must also be established.

A. SENSORS

Television cameras are the primary sensors used in the three preferred candidate visual systems. Failure of the sensor subsystem will result in termination of the mission and, in the event the visual system is used as a navigational aid, probable loss of the FFTO. Thus, the quality of the sensor subsystem is an important parameter to optimize.

1. State-of-the-Art TV Cameras

Television cameras have been used in space since the very early days of orbiting satellites. A number of good, space-qualified cameras have been developed since that time. Methods have been devised to produce color and stereo pictures, some on a near-real-time basis. Cameras for use in manned missions have generally employed the 525-line, 30-frame-per-second format for compatibility with National Television Standards Committee (NTSC) standards for commercial broadcasts. The NTSC format is generally accepted for producing a display with adequate resolution, motion rendition, and realistic color, saturation, and hue. A listing of space-qualified, NTSC-compatible cameras through the 1975 time frame is given in Table VII-1.

*Table VII-1 Space-Qualified, NTSC-Compatible TV Cameras**

Parameter	Type of Camera							
	MSC	Skylab	Apollo 15/16	Apollo 13/14	Apollo 12	Apollo 11	Apollo 10	WTC-13
Application	Developmental	Workshop, MDA, Command Module	Lunar Surface	Lunar Surface	Lunar Surface	Command Module	Command Module	Military Aircraft
Video Bandwidth	5 MHz	4.5 MHz	3.5 MHz	4.5 MHz	4.5 MHz	4.5 MHz	4.5 MHz	4.5 MHz
Resolution	450 lines	350 lines	200 lines	350 lines	350 lines	350 lines	350 lines	350 lines
Sensor Type	1/2-in. (1.27-cm) Vidicon	1-in. (2.54-cm) SIT Vidicon	1-in. (2.54-cm) SIT Vidicon	1-in. (2.54-cm) SIT Vidicon	1-in. (2.54-cm) SEC Vidicon	1-in. (2.54-cm) SEC Vidicon	1-in. (2.54-cm) SEC Vidicon	1-in. (2.54-cm) SEC Vidicon
Sensitivity	50 ft-c (538 lux) at 40 db	0.5 ft-c (5.38 lux) at 35 db	3-ft-c (32.3 lux) at 35 db	1 ft-c (10.8 lux) at 32 db	1 ft-c (10.8 lux) at 32 db	1 ft-c (10.8 lux) at 32 db	1 ft-c (10.8 lux) at 32 db	1 ft-c (10.8 lux) at 32 db
Dynamic Range	1000:1	1000:1	700:1	1000:1	1000:1	1000:1	1000:1	1000:1
Field of View	6° to 48° (0.105 to 0.838 rad)	9° to 54° (0.157 to 0.942 rad)	9° to 54° (0.157 to 0.942 rad)	7° to 43° (0.122 to 0.750 rad)	7° to 43° (0.122 to 0.750 rad)	9° to 54° (0.157 to 0.942 rad)	9° to 54° (0.157 to 0.942 rad)	
Iris Range	f/1.4	f/2.2 to f/22	f/2.2 to f/22	f/4.4 to f/44	f/4.4 to f/44	f/4.4 to f/44	f/2.2 to f/22	
Power at 28 ± 4 vdc	12 w	21 w	12.8 w	16 w	16 w	20 w	20 w	20 w
Weight	6.2 lb (2.81 kg)	13.5 lb (6.12 kg)	12.8 lb (5.80 kg)	13 lb (5.90 kg)	13 lb (5.90 kg)	13 lb (5.90 kg)	13 lb (5.90 kg)	11 lb 5.00 kg)
Manufacturer	Lockheed	Westinghouse	RCA	Westinghouse	Westinghouse	Westinghouse	Westinghouse	Westinghouse

*National Television Standards Committee (NTSC) compatible color format:

Frame rate per second - 29.97
Interlace - 2 to 1
Vertical scans (fields) per second - 59.94
Horizontal lines per frame - 525
Horizontal lines per second - 15,734.264
Aspect ratio, horizontal to vertical - 4 to 3
Color encoding - field sequential

Note that all the TV cameras listed in the table are color cameras. Analyses and simulations will be performed later during this study to determine if *color* is a necessary parameter for FFTO tasks. In the event that monochrome emerges as the preferred system, each of the color cameras can be converted to monochrome by a simple modification--removing the color wheel and motor. The primary benefits of this modification are the ten-fold increase in sensitivity, coupled with a small decrease in weight and power.

The earlier Apollo color cameras were easily damaged when pointed directly at the sun or specularly reflected sunlight; the curtailed coverage of the Apollo 12 moonwalk is a graphic example. A new burn-free silicon target for the camera was subsequently developed to prevent such problems. All of the later Apollo cameras and the camera developed for Skylab have similar characteristics and are basically acceptable for the sensor subsystem. The RCA Apollo 15/16 lunar surface cameras require somewhat less power (12.8 w, as opposed to 16-21 w), and the NASA/Lockheed camera, presently under development, combines low power and much lower weight, but suffers from a lack of sensitivity.

2. Developmental TV Cameras

With the exception of the NASA/Lockheed camera, the discussion thus far has centered around space-qualified TV cameras that are in the "off-the-shelf" category. This approach leads to the lowest-risk, lowest-cost development. However, new types of sensors under development offer superior performance in some areas, particularly if a color system is required. State-of-the-art development presently centers around three new sensors: (1) silicon photosensor arrays; (2) charge-coupled devices; and (3) crossed-stripe vidicons. These devices are discussed below.

a. Silicon Photosensor Arrays - Silicon photosensor arrays can be constructed using either photodiodes or phototransistors. The individual devices are integrated onto a single wafer arranged in a rectangular, addressable matrix. Westinghouse has produced an array of up to 400 by 500 elements.

The sensitivity of such an array is roughly equivalent to that of a standard vidicon. It is extremely linear because each element is the same size, has the same center-to-center spacing, and is addressed digitally. The most serious drawback to a sensor of this type is the inability to manufacture a flaw-free wafer with present technology. Defects may cause certain spots or lines to appear either light or dark, and picture details in the affected

areas will thus be obscured. In small production runs, about 10% of the elements in each wafer will normally be defective. To date no large-area array has been produced free of defects. Large runs with improved techniques may allow selection of a small number of flawless arrays, but this procedure is expensive. As a result, it is doubtful whether silicon photosensors can be relied on for use during early Shuttle missions.

b. Charge-Coupled Devices - A recent development that shows great future potential is the charge-coupled device (CCD). The CCD consists of a silicon substrate insulated from tungsten electrodes by a thin layer of silicon dioxide. Light impinging on the substrate is converted into a charge that is stored in potential wells. The magnitude of the charge depends on the number of photons hitting the surface. Voltages applied to the electrodes move these charged potential wells through the substrate, where they are "dumped" into a register, producing an analog output signal.

The primary advantages of the CCD over silicon photodiode arrays is in their simplicity of manufacture: the CCD needs no diffusions into the silicon substrate to form image elements, whereas the diode array can require up to several hundred thousand diffusions. Thus, the yield for CCDs and the probability of a perfect wafer are much higher. In addition, the CCD is more sensitive than even the intensifier vidicon, and more linear since a deflected beam is not required and the readout is digitally clocked. Moreover, simple, conventional circuitry is all that is needed to read out the array.

The most serious drawback at this time is the relatively large size of the elements. To make an array large enough for commercial standard TV, the elemental area must be reduced. At the present time, the largest array is 128 by 106 elements, produced by Bell Laboratories. However, the potential value of CCDs as the ultimate replacement for vacuum tube sensors is so great that several large companies are pursuing aggressive research and development programs, and the technology is advancing much more rapidly than that for other solid-state TV sensors. The charge-coupled device is, therefore, a potential candidate for a 1975 camera, whether color or monochromatic.

c. Crossed-Stripe Vidicons - If color is a requirement, the crossed-stripe vidicon invented by RCA provides certain advantages over the rotating color wheel cameras currently available. This development utilizes two dichroic filters. One filter consists of alternating bands of a blue-reflecting surface and a clear

transparent surface and is placed in front of the vidicon sensor surface with the stripes vertical. A similar filter, which has alternate clear and red-stop stripes, is placed in front of the first filter with the stripes at a 45-deg (0.785-rad) angle to the vertical. Light that passes through the filter and reaches the vidicon target is scanned in a normal fashion. The output signal contains the monochrome information as well as two subcarriers, amplitude-modulated by the red and blue information. The color signals may be stripped off and remodulated as a compatible NTSC signal for transmission to the ground. The signal can also be reprocessed for viewing on an onboard color or monochrome monitor without the flicker problem that occurs with the field-sequential Apollo color cameras.

Because the cross-stripe camera makes use of a single vidicon tube and does not require a motor or color wheel, it can be potentially lighter and may consume less power than present Apollo cameras. The same type of SIT tube now in use can be adapted to the cross-stripe method. The tube must, however, be of very high quality; i.e., it must have low noise and uniform resolution, and the deflection must be extremely linear.

The above developments represent some of the techniques that may be applicable in 1975. Although each represents some desirable features unavailable in present cameras, there is an attendant risk in specifying any of these devices now.

3. TV Camera Sensor Summary

The visual system sensors will, in all likelihood, be selected from or be typical to those identified in Table VII-1. The basic differences between the sensor subsystems for the monoscopic and stereo visual candidates are summarized in Table VII-2. Note that these differences relate only to a single sensor package, since either candidate system may require more than one view.

Table VII-2 Sensor Differences between Candidate Systems

System Parameter*	Monoscopic System	Stereo-Fresnel System
Bandwidth	5 MHz	10 MHz
Power	12 w	24 w
Weight	2.8 kg (6.2 lb)	5.6 kg (12.4 lb)
Size (Width x Height x Depth)	8.2 x 13.1 x 24.1 cm (3.25 x 5.2 x 9.5 in.)	16.5 x 13.1 x 24.1 cm (6.5 x 5.2 x 9.5 in.)

*Based on the NASA/Lockheed camera.

4. Sensor Aids

The variety and number of possible FFTO tasks may place certain requirements on the weight, location, and mobility of the visual system sensors. Operating the manipulator within a confined or partially enclosed volume might require a visual sensor very near the end-effector of the manipulator arm, whereas the weight and volume of the TV camera might make the requirement seem impractical or impossible. The following paragraphs describe some methods that could help alleviate such problems.

a. Arm-Mounted Mirrors - One popular concept for providing around-the-corner vision of objects from a camera fixed on the body of the teleoperator is to use a mirror or mirrors mounted at the desired points on a manipulator arm. This concept can become quite complex, depending on the motion of the arm. If more than one mirror is used or if the mirror must track the end-effector, some mechanism must be employed to rotate the mirror at half the rotation rate of the elbow or wrist joint in the manipulator arm. Also, the mirrors must be kept small in order to achieve the desired reduction in weight and volume, which imposes narrow field-of-view restrictions.

b. Fiber-Optic Bundles - An alternative method would employ a flexible fiber-optic bundle to relay the image from the end-effector to the faceplate of the camera. The use of fiber-optics bundles to transport images is an attractive concept for possible application to a teleoperator visual system sensor package. A coherent fiber-optic bundle or light pipe could be used to eliminate the need for heavy cameras at or near the end-effector of a manipulator arm since the image could be transported to a camera inside the body of the FFTO. A coherent light pipe capable of achieving this without degrading a standard TV image would require about 300,000 fibers and be approximately 1½ to 2 in. (3.81 to 5.08 cm) in diameter. A cable this size would have a bend radius of 5 to 6 in. (12.7 to 15.2 cm), and at present, would cost about $6,000 for a 12-ft (3.67-m) length.

An important parameter in considering fiber optics for FFTO applications is the transmissivity of the fiber material. Corning Glass Works and Bell Laboratories have made significant progress in developing extremely low-loss [60% loss/km (60% loss/3281 ft)] optical waveguides for use in data handling and communications, but these waveguides are undesirable for coherent fiber-optic bundles due to their low usable cross-sectional area.

As shown in Fig. VII-1 the cladding around each fiber constitutes about 65% of the total cross-sectional area for Corning low-loss material. If light were imaged on a bundle of such fibers, 65% would be lost on the cladding and an additional 15% would be lost between fibers. Also, an anticipated 5% of the light would be lost upon entry into the waveguides, leaving no more than 10 to 15% of the light to be transmitted through the fiber-optic bundle to the TV sensor.

Higher-loss optical waveguides [20% loss/meter (20% loss/3.28 ft)] are available with minimal cladding, and are most often used to transport images across short distances. Again, nearly 15 to 20% of the light will be lost between fibers and upon entry into the fibers, but in this case the minimal cladding allows some 80-85% of the incident light to enter the fiber-optic bundle (considerably more than with low-loss waveguides). If this higher-loss optical waveguide is used over distances beyond 7.6 m (25 ft), its increased cross-section advantage is nullified by absorption, and again less than 10-15% of the incident light will reach the TV sensor. Figure VII-2 shows the percent transmittivity as a function of distance for the two waveguides.

In summary, methods are available to reduce the mass and volume of the visual system sensor package located on the manipulator arm. Unless the weight and volume requirements are very critical, however, the increased complexity should be avoided. A simple TV camera operating without optical relays or mirrors provides an optimum output with minimum complexity.

B. ILLUMINATION

An analysis of the photometric parameters of the sensor subsystem must consider sensor sensitivity, ambient lighting, artificial lighting, size of target, and target reflectivity. A list of various space-qualified TV cameras and their corresponding sensitivities is shown in Table VII-3.

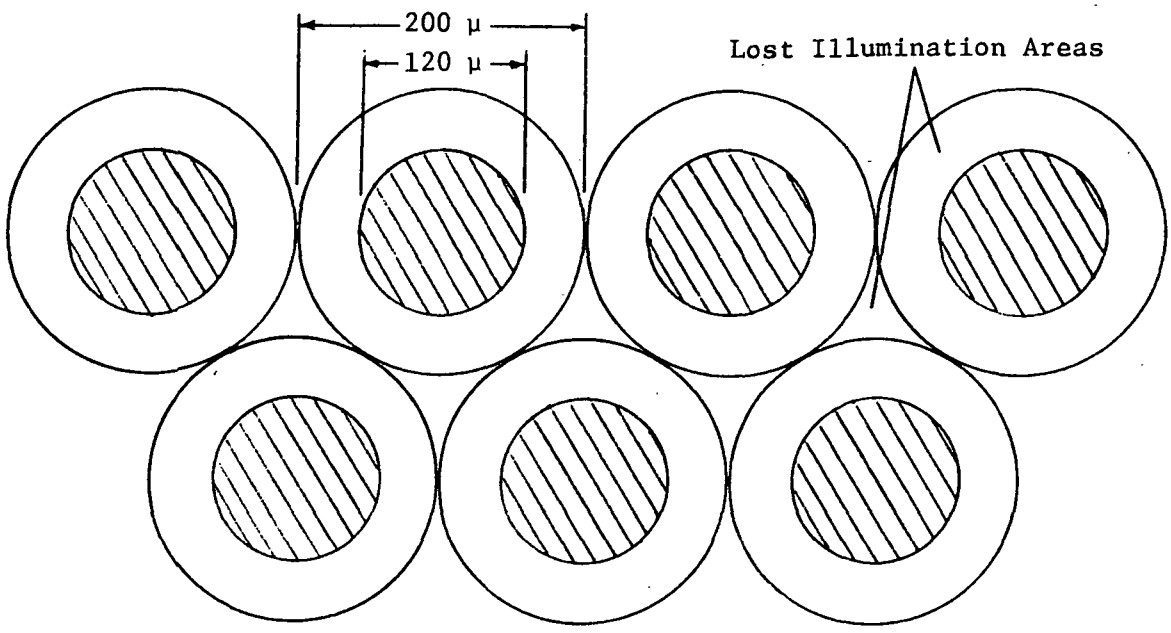

Fig. VII-1 Cross-Sectional Diagram of Corning Low-Loss Optical Waveguides

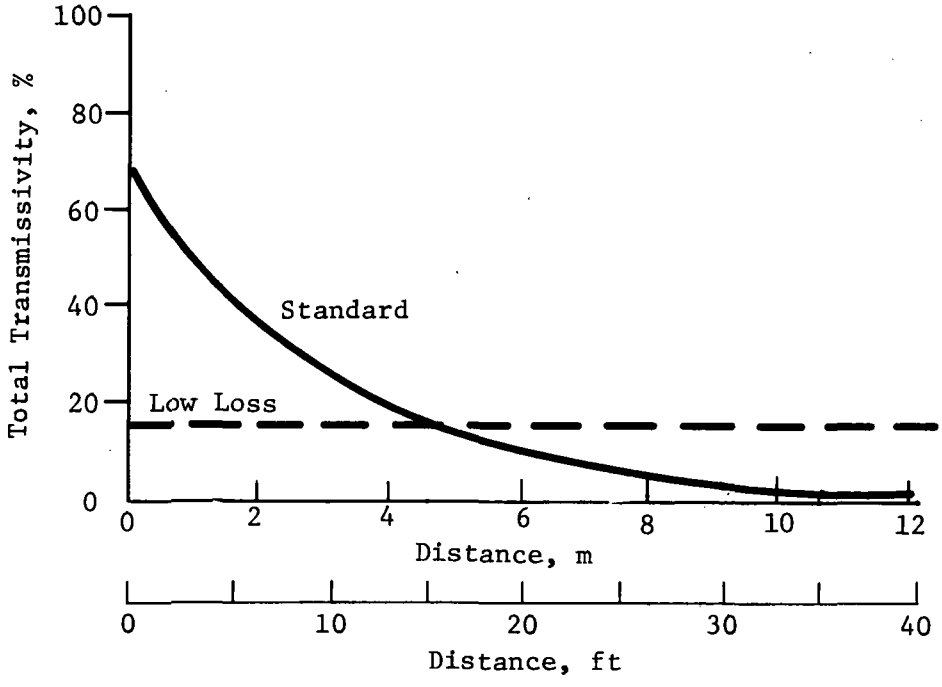

Fig. VII-2 Percent Transmissivity vs Distance for Standard and Low-Loss Optical Waveguides (Entry Losses Included)

Table VII-3 Sensitivity of Various Space-Qualified TV Cameras

Camera	Sensitivity, ft-c (lux)
Apollo Color (RCA)	3 (32.3)
Apollo Color (Westinghouse)	1 (10.8)
NASA/Lockheed Color	50 (538)
NASA/Lockheed Monochrome	4 (43.1)
ATS AVCS--Shuttered Vidicon	0.1 (1.08)
High Resolution [11.4-cm (4.5-in.)] Beam-Return Vidicon	0.01 (0.1) (assumes 10-msec exposure)
Apollo Black and White (Westinghouse)	0.003 (0.03)

The sensitivities listed above are numerically equivalent to the required brightness of the target in foot-lamberts regardless of target distance.

The brightness of the target surface in foot-lamberts is given by

$$B = R\left(\frac{\varepsilon}{A}\right)$$

$$= R\left(\frac{4\pi C}{A}\right)$$

where

R = Reflectivity of target surface,

ε = Total luminous flux emanating through 4π steradians, in lumens,

A = Area illuminated, in square feet

C = Spherical candlepower of source, in candles.

The intensity is then given by

$$C = \frac{BA}{4\pi R} \text{ candles}$$

or

$$\varepsilon = \frac{BA}{R} \text{ lumens.}$$

Assuming a target reflectivity of 70% and the worst camera sensitivity of 50 ft-c (538 lux), the required source intensity is

$$C = \frac{BA}{4\pi R} = \frac{50 \text{ ft-lamberts}}{(0.7)\ 4\pi} (A)$$

$$= 5.7 \text{ ft-lamberts} \times (A)$$

$$= 19.5 \text{ Cd/m}^2 \times (A)$$

If all the available light is confined to a 44-deg (0.768-rad) field (a solid angle of $\approx$ 0.6 sr), then A is equivalent to the square of the source-to-target distance, D, times the solid angle, or

$$A = (0.6)\ D^2,$$

and C becomes

$$C = (5.7 \text{ ft-lamberts})\ (0.6)\ (D^2)$$

$$= (3.4 \text{ ft-lamberts})\ (D^2)$$

$$= 11.6 \text{ Cd/m}^2 \times (D^2)$$

Therefore, a source intensity of 1.36×10^3 candles (1.7×10^4 lumens) would be required to sufficiently illuminate a 44-deg (0.768-rad) field at a range of 20 ft (6.1 m) for detection by the NASA/Lockheed color camera. This figure is 25% higher than the specified brightness requirement of 40 ft-lamberts (137 Cd/m^2) at the base of the working volume.

Figure VII-3 is a graph of source intensity vs source-to-target distance for the cameras listed earlier. Again, the total illumination is confined to a 44-deg (0.768-rad) field. As can be seen, the NASA/Lockheed camera, as presently configured, requires nearly 20 times as much target illumination as the RCA Apollo camera. The added weight and power of the lighting equipment may negate the weight and power savings of that camera. Compare the curve of the NASA/Lockheed color camera with the same unit modified for monochrome operation (the NASA/Lockheed black and white camera). The sensitivity is considerably greater so that 10 times less candlepower is needed for the same picture signal-to-noise ratio.

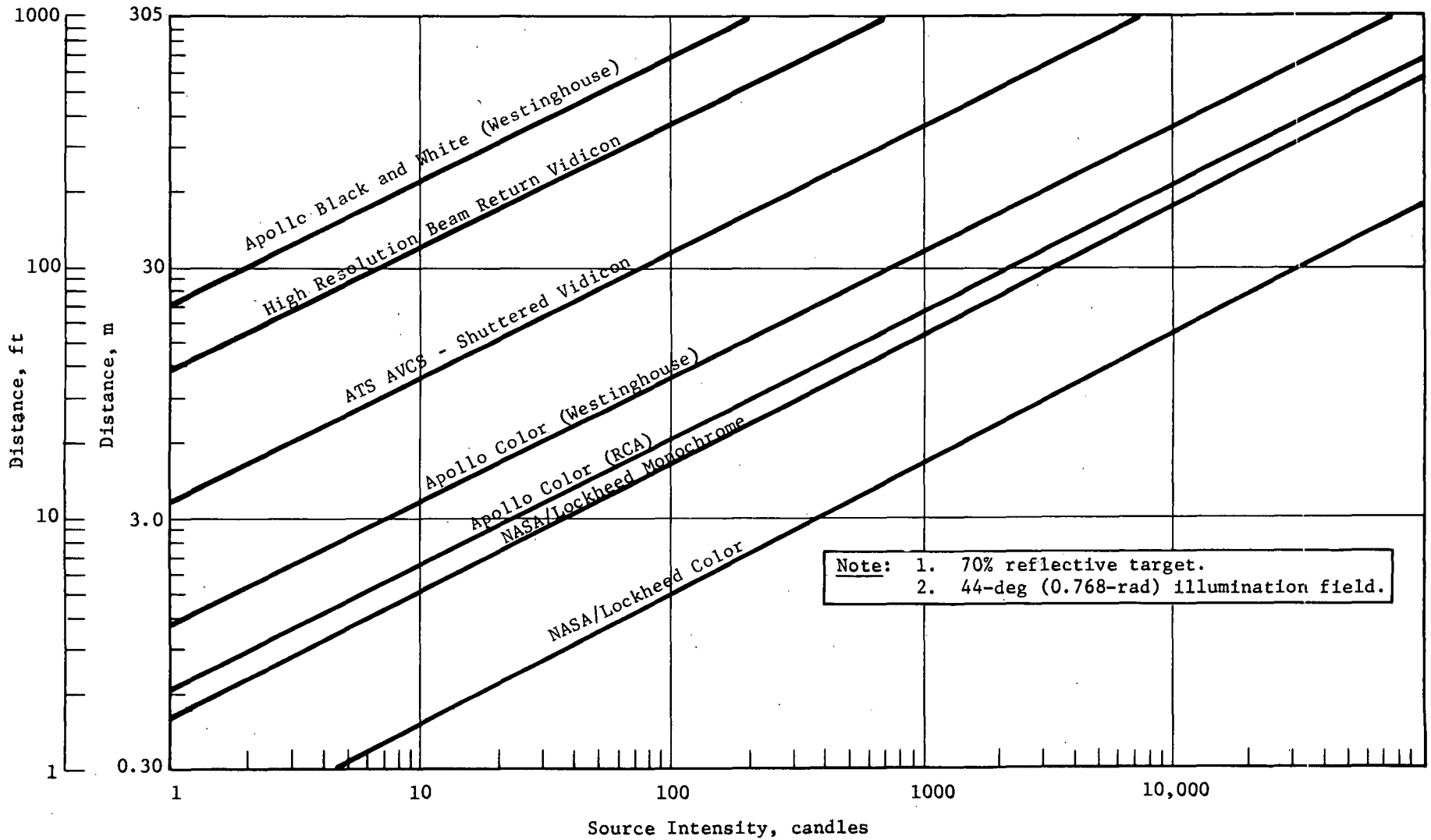

Fig. VII-3 Light Source Intensity

1. Artificial Lighting

The amount of electrical power required to produce the source intensities derived above depends on the type and efficiency of the lamp used. The tungsten-halogen cycle spotlights are limited to approximately 22 lumens (1.75 candles) per watt of electrical power, but these lamps emanate from a small point and can therefore be easily focused into a desired configuration. At present, tungsten-halogen and stroboscopic lamps are the only lamps available that can perform in a hard space environment.

If mission requirements dictate the use of continuous or near-continuous artificial illumination, then development and qualification of a cold-cathode fluorescent lamp should be considered. Spectral matching of fluorescent lamps can provide efficiencies of up to 100 lumens (8.0 candles) per watt of electrical power, and the lamps can easily be matched spectrally with the chosen sensor in order to attain maximum sensor output for the input power of a given lamp. Furthermore, the cold-cathode fluorescent lamps emanate from the outer surface of a glass tube and consequently provide a more diffuse lighting field than tungsten lamps. The fluorescents are, therefore, better suited to area illumination where soft shadows are desired.

Figure VII-4 shows the electrical power required by various lamps to illuminate a 70% reflective target to a brightness of 40 ft-lamberts (137 candles/m^2) as a function of the source-to-targett distance, assuming a 44-deg (0.768-rad) illumination field. Since the tungsten-halogen cycle lamps are highly developed and lend themselves to high-illumination spotlighting, they are recommended for all necessary teleoperator artificial lighting requirements.

A number of techniques can be implemented to soften the shadows and control the beam direction and spread from these lamps. One effective method for providing diffuse illumination over a controlled field is to use a fly-eye type lens in front of the lamp. This technique makes the source appear as a two-dimensional array of small spotlights, all illuminating the desired object field from a slightly different angle. The result is softer shadows with high spotlight efficiency.

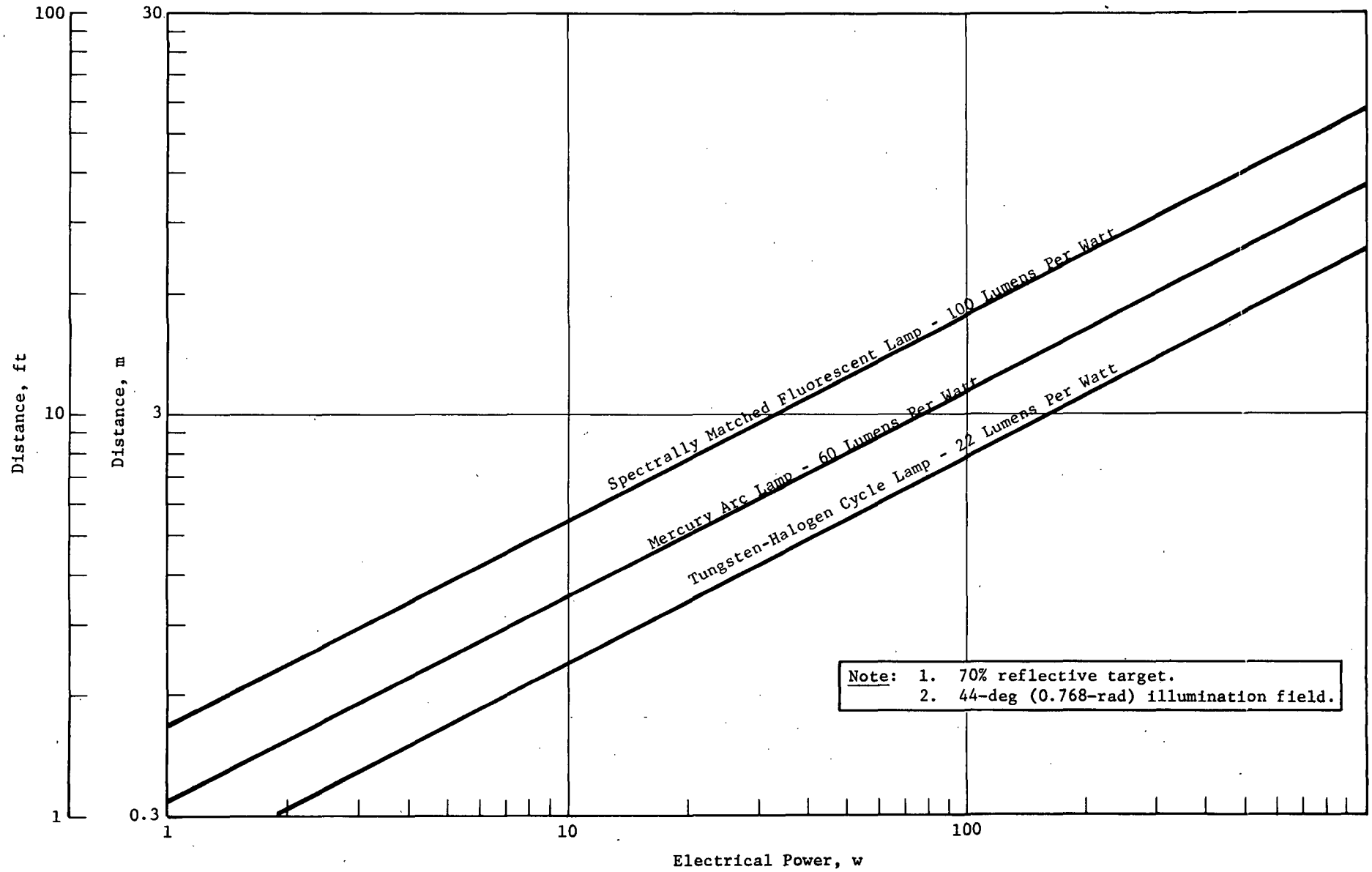

Fig. VII-4 Illumination Power Requirements

Other common artificial lighting options include the use of fresnel lenses for concentrated spot lighting, cylindrical and spherical reflectors to improve directivity and efficiency, and ground-glass type diffusers for softening shadows. In addition, movable reflectors and fresnel-type lenses could be incorporated into a "zoom" lighting system for variable concentration of illumination. The design of such a system must be given further consideration to determine changes in the lamp efficiency.

2. Passive Lighting

An important concept to consider in a discussion of object illumination is the use of passive lighting devices designed to reflect existing light into the object. Passive lighting devices could greatly reduce the requirement for artificial lighting in situations where sunlight is incident on or near the sensor subsystem. Some of the different passive lighting techniques that could be used for teleoperator applications are discussed in the following paragraphs.

a. Flat Mirrors - The most obvious form of passive lighting is to use flat mirrors to direct existing sunlight onto the desired object or area. This method provides very bright illumination and hard, sharp shadows identical to those observed with direct sunlight. The area illuminated is limited by the size and orientation of the mirror, but attendant servo systems would enable mirrors to track the sun and direct the illumination where required.

If considerable time is to be spent viewing a specific small area, the flat mirror and servo system may be desirable. If a broader, but slightly less intense illumination field is desired, the flat mirror could be replaced with a convex mirror or convex mirror array, but a tracking system would still be required. A diffuse or specular reflecting sphere mounted adjacent to the sensor would provide reflected light through a wide range of incident angles and would not require a servo system of any sort. This technique could be used in combination with artificial lighting, as shown in Fig. VII-5, to provide minimal power usage and maximum versatility.

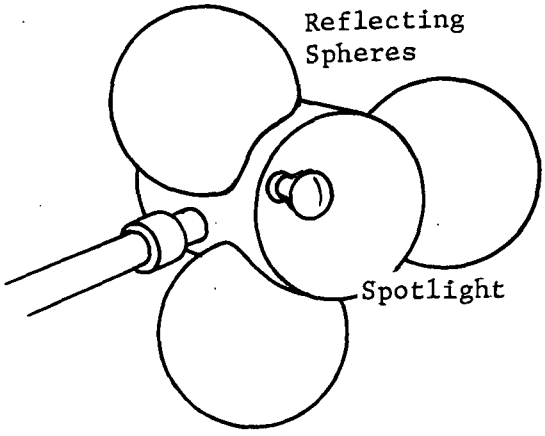

Fig. VII-5 Combined Passive and Active Lighting Scheme

b. Shading Techniques - Another technique for improving object illumination and reducing contrast and hard shadows is that of shading the object from direct sunlight. An opaque shield would block direct sunlight so that the methods described above could be used effectively, but a more logical approach would be to use a transmitting diffuser or fly's-eye lens that would convert direct sunlight into a diffuse and less intense illumination field. Shading techniques, like flat mirrors, would require attendant servo systems for position control.

Highly diffuse lighting techniques (i.e., ground glass or diffuser reflection) and shading techniques are relatively ineffective for object distances beyond 6.1 m (20 ft). Spotlighting techniques are more suitable for illuminating distant objects.

3. Summary

Illumination requirements are independent of the number of cameras viewing the scene. The lighting techniques discussed in the preceding paragraphs perform identically for both stereoscopic and monoscopic sensor subsystems, provided a particular camera is specified.

If the low-sensitivity NASA/Lockheed color camera is used to view an adequately illuminated 44-deg (0.768-rad) field at 6.1 m (20 ft), then about 775 w of electrical power are required to illuminate the scene with a concentrated tungsten-halogen lamp. If the same camera is modified for monochrome operation, then only 62 w of electrical power are required. These figures represent an approximate upper limit on power consumption for artificial lighting.

C. DISPLAYS

The most significant analytical task required in considering the candidate system displays is to eliminate one of the stereo display systems. Both the fresnel and lenticular displays can be designed for identical TV sensors and sensor subsystem requirements, including (1) single-camera, split-field imaging, (2) dual-camera, split-field imaging and (3) dual-camera, electronic time-sharing. Both systems can use small, low-power-consumption display monitors that optically magnify the field of view to yield the desired image dimensions, and their bandwidth, power consumption, and resolution specifications are nearly equal. The primary differences between them lie in the region between the display monitor tubes and the display screen. The following analysis of the two display systems describes those differences and their effect on complexity and performance.

1. Fresnel Display Characteristics

The components of the fresnel display are diagrammed in Fig. VII-6. Display tube R contains the right camera image and display tube L contains the left camera image. Each display tube is projected along its own optical axis through a separate transfer lens $\left(L_R \text{ or } L_L\right)$ onto the fresnel screen (F) such that the perimeters of the display tube coincide on the face of the display. The fresnel display screen acts as a field lens and directs the light from the right and left images to the corresponding eyes of the viewer.

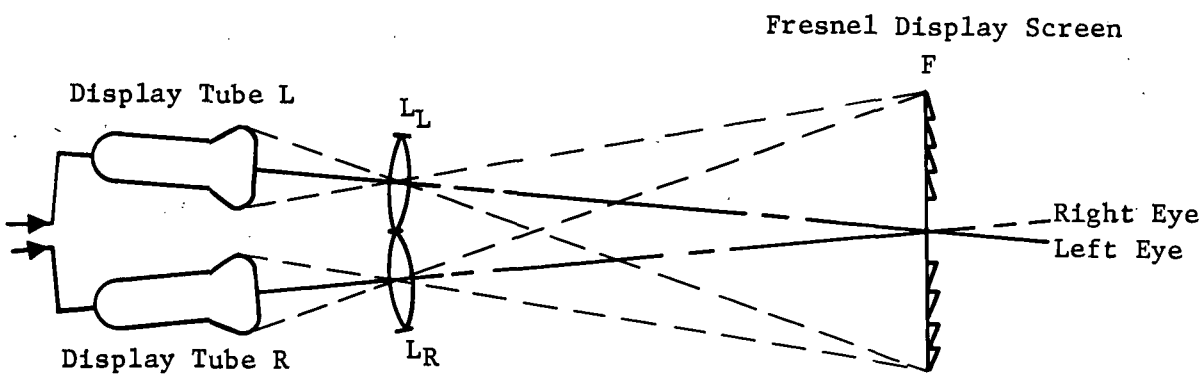

Fig. VII-6 Fresnel Display Components

Many of the display system parameters are defined or limited by the display's basic theory of operation. These parameters are discussed in the following paragraphs.

a. Resolution - The resolution of the fresnel display can be influenced by the display tubes (monitors), the transfer lenses, or the eyes of the viewer. For the FFTO, it is certain that the disdisplay tubes, being raster scan-type TV monitors, will limit the resolution of the display system. The human eye and an off-the-shelf transfer lens are both capable of much higher resolution than state-of-the-art TV monitors. Since the display image is projected in the plane of the fresnel field lens, this lens has little or no influence on the resolution of the display: its performance influences only the definition of the viewing field (exit pupil) of the display.

b. Illumination Efficiency - The fresnel stereoscopic display has an inherently high illumination efficiency as a result of its basic design. As with any projected display, much of the light emanating from the display tube or monitor is collected by the transfer lens and projected onto the display screen. Conventional display screens (ground glass, liquid crystals, etc) then diffuse the projected light over a wide field (often nearly 2π sr) so that very little illumination is collected by the viewer's eye. In comparison, the fresnel field lens or display screen collects all the image illumination incident on its surface and directs that illumination into an area of about 100 sq cm (15.5 sq in.)--corresponding to a solid angle of ≈ 0.03 sr--at a distance of 46 to 61 cm (18 to 24 in.) from the face of the display. This represents more than a hundred-fold improvement over the efficiency of a diffuse screen.

c. Display Size - The size of the fresnel display screen is also limited by the design of the display subsystem. Since a standard fresnel field lens will not perform at lens speeds faster than about f/1.5 at unit magnification (object and image distance equal to two focal lengths), the diameter is limited to approximately one-third of the viewer-to-display distance. Thus, a fresnel display for the FFTO would be limited to about 20.3 cm (8 in.). This has been demonstrated in laboratory bench tests at Martin Marietta. It is quite possible that a custom-designed fresnel lens could increase this limit to 30.5 cm (12 in.).

d. Head Movement - Restriction of head movement is the big drawback of the fresnel stereoscopic display. If glasses or headgear are to be avoided, the right and left images *must* be projected

into separate zones in space. Otherwise there is no facility for separating the stereo images. Depending on the design details of the display subsystem and on the size and shape of the transfer lenses, the allowable horizontal head movement for stereoscopic vision could range from nearly zero to 6.4 cm (2.5 in.), the latter limit being dictated by the human interpupillary distance. Vertical head movement could be as much as 15.2 cm (6 in.), and forward head movement, as much as 0.6 m (2 ft).

e. Hardware Alignment Criteria - Due to the simple and straightforward projection methods used in the fresnel display, alignment tolerances are dictated only by the viewer's ability to obtain proper stereo registration between the two images, and are therefore quite relaxed. The actual tolerances must be measured subjectively.

f. Display Acquisition - Due to the small degree of allowable head movement inherent in the design, it is more difficult to acquire the fresnel stereo display than conventional monoscopic displays. No image can be seen on the display screen unless the viewer's eyes are within the allowable head movement volume specified earlier. However, bench tests at Martin Marietta have shown that acquisition of the fresnel display, though somewhat critical in its viewer position requirements, is almost instantaneous, even for persons with minimal training. Consequently, the disadvantage in this display is not the relative difficulty of acquisition, but the inability to view the display at oblique angles to the screen.

g. Ambient Light - The high illumination efficiency of the fresnel display ideally suits it to use in high ambient lighting conditions. Display brightness is excellent, as was explained earlier, but reflections off the face of the fresnel screen must not be ignored. The concentric grooves in the screen give rise to radial reflections that can be very disturbing. These should be eliminated by using a circularly polarized cover plate (often found on standard TV screens) or antireflection coatings on the display surface.

2. Lenticular Display Characteristics

The components of the lenticular display are diagrammed in Fig. VII-7. Display tube R contains the right camera image and display tube L contains the left camera image. Each display image is divided into narrow strips by a Ronchi ruling or mixing grid of alternating opaque and transparent vertical lines. A beamsplitter is used to interlace the right and left image strips

and to bring them onto a common optical axis. The interlaced images are then projected through a transfer lens onto a lenticular faceplate with a diffuse backing so that a right and left image strip pair falls precisely behind each lenticule. The lenticules then direct the right image strips into the right eye zone and the left image strips onto the left eye zone so that the display strips can be viewed in stereo. Again, many of the display system parameters are defined or limited by the display's basic theory of operation. These parameters are discussed below.

a. Resolution - The resolution of a lenticular display is limited by the spacing of the lenticular grid or the resolution of the image introduced into the display. For example, if the frequency of the lenticular screen exceeds the line frequency of the image lying immediately behind the screen, the effective resolution of the display cannot be improved by improving the lenticular screen.

Figure VII-8 shows a plot of display resolution vs lenticular grid frequency for a standard 525-line, twin-camera TV system. When the grid spacing is matched to the TV line spacing of the image, the display is optimized. Any reduction in the line frequency of the lenticular grid will cause a linear reduction in the resolution of the display, but an increase in the line frequency will yield little or no improvement.

b. Illumination Efficienty - The lenticular display employs a diffuse surface at the image plane, resulting in an illumination efficiency similar to that of a back-projected monoscopic system. It could be argued that 50% of the light is lost immediately upon striking the mixing grids, but in a TV application the monitor could be rotated so that the scan lines are vertical and separated by dark areas. If the *extremely* critical linearity requirements are met, these dark areas could eliminate the need for additional grids and all of the light would be projected into the beamsplitter.

At the beamsplitter at least 50% of the incident light will be lost, so at best the illumination incident on the display screen will be one-half that incident on the screen of a monoscopic display. The directivity of the lenticular screen may compensate for the beamsplitter loss in on-axis viewing, but off-axis illumination would be reduced.

c. Display Size - Theoretically, there is no sharp-design cutoff limiting the size of a lenticular display. Scientists at the University of Illinois claim to have developed a 15.3-cm (6-in.) lenticular display by using a custom-built TV monitor and

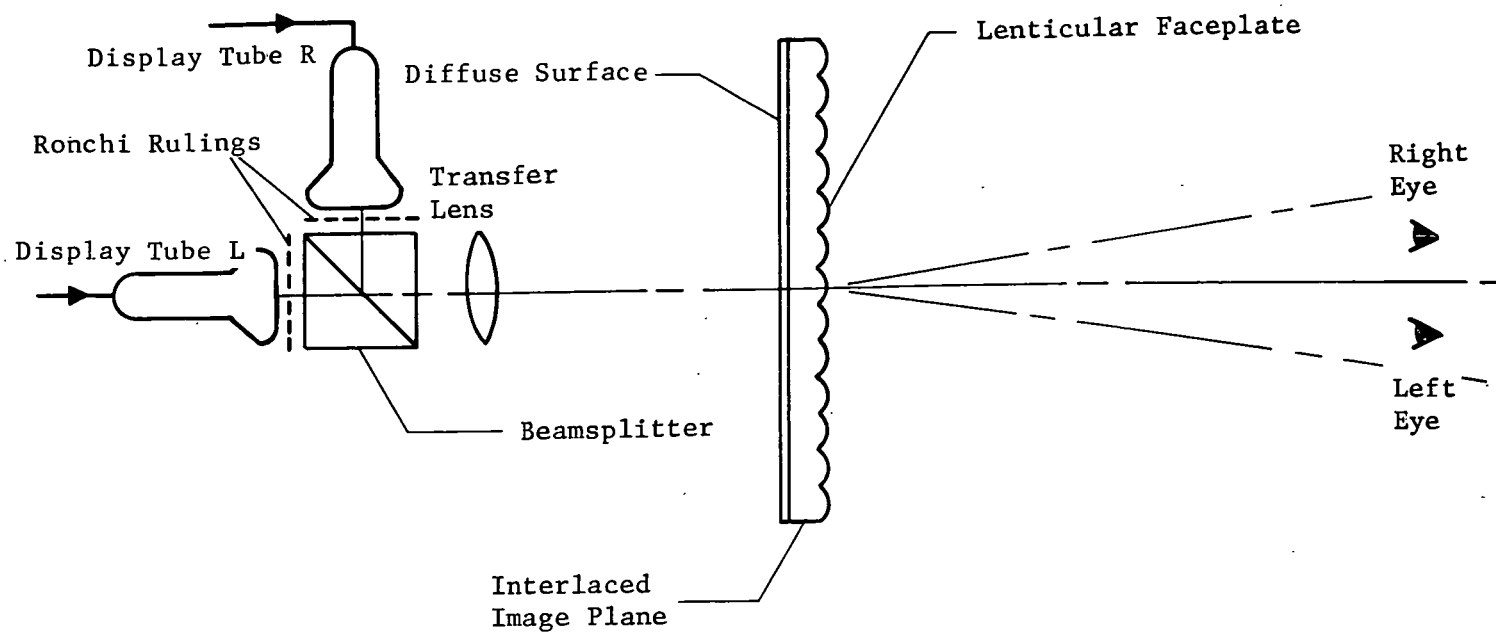

Fig. VII-7 Lenticular Display Components

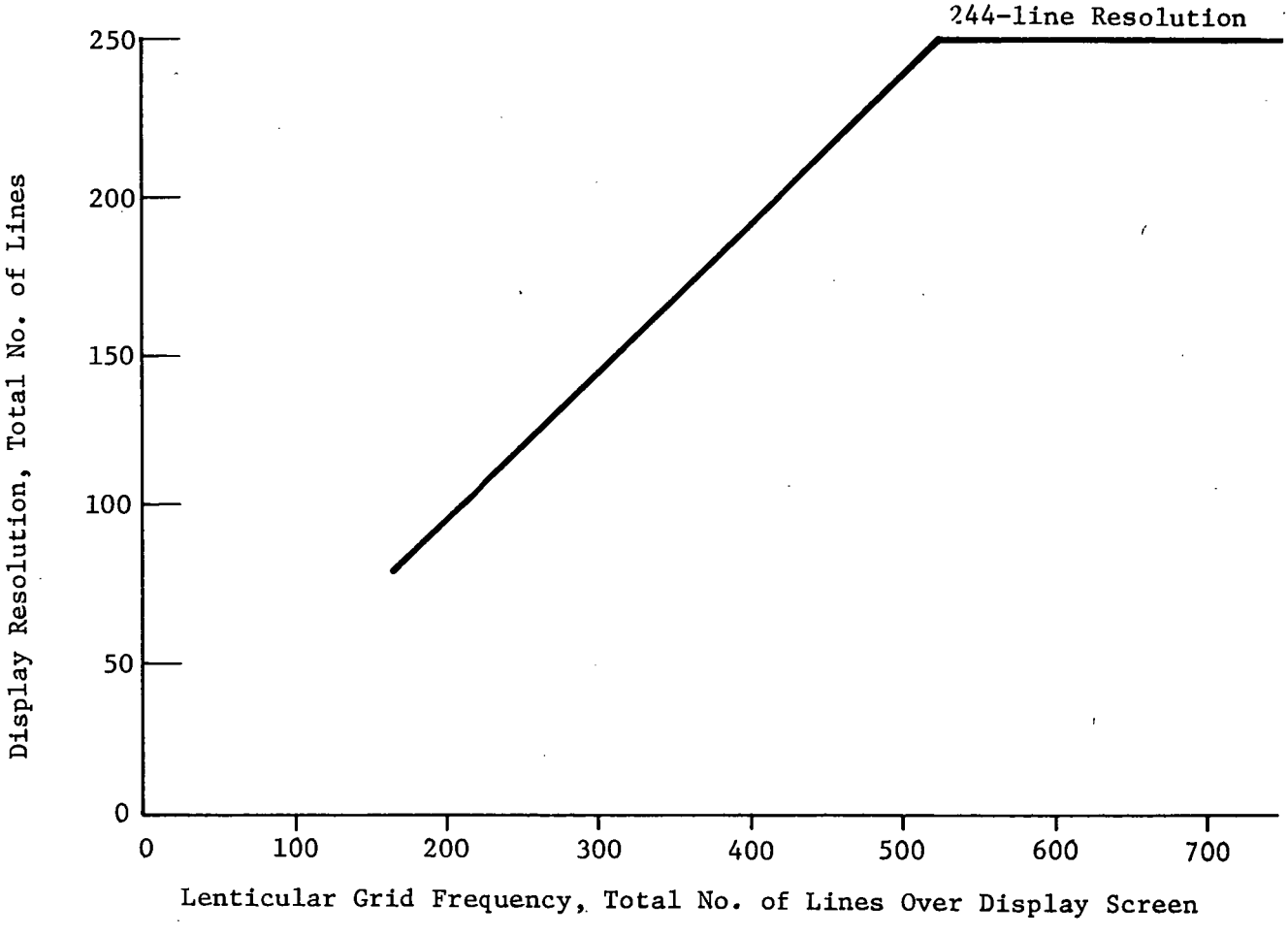

Fig. VII-8 Lenticular Display Resolution vs Lenticular Grid Spacing

electronic interlacing of images. Martin Marietta is not aware of any larger lenticular displays and suspect that somewhere around 15.3 cm (6 in.) is a practical limit.

d. Head Movement - Computing the allowable head movement for a typical lenticular display system is fairly complex due to the large number of optical parameters involved. However, the use of television as the image-forming media limits the parameters to a point where the basic capabilities of the system can be described.

Consider the diagram shown in Fig. VII-9, where the TV image plane is made up of alternating right and left image elements that have been interlaced either optically or electronically. Assuming that the image elements are spaced such that one image element pair has the same dimension as a single lenticular lens element, each image element pair will have an identical geometrical projection through its corresponding lenticular lens element. This allows one to view the display in stereo as long as the left eye remains in the left-element viewing angle and the right eye remains in the right-element viewing angle. Consequently, at any given instant the viewer can see stereo over an image format no wider than his interpupillary dimension. As he moves his head sideways, the area of the display in which he sees stereo also moves sideways. This situation is undesirable for the FFTO application since only a small percentage of the available stereo information is used at any given time. If a display width of 6.6 cm (2.6 in.) is satisfactory, little or no information is wasted and the head is limited in horizontal movement to approximately ±3.3 cm (±1.3 in.).

Since a larger display is required, a similar but alternative approach can be taken, as is shown in Fig. VII-10. In this case, the dimension of each image element pair is slightly larger than the width of a lenticular lens element. This increases the obliquity of the image element projection angle as a function of the distance from the center of the display screen, resulting in the formation of a horizontal "exit pupil" for each eye. Again, horizontal head motion is limited to approximately ±3.3 cm (±1.3 in.), but a larger display can be viewed. If the head is moved further horizontally, a double monoscopic image will appear on the display. Characteristically, lenticular displays do, in fact, allow considerable vertical head motion while viewing the stereo image. Head movement normal to the screen could be as much as 0.3 to 0.61 m (1 to 2 ft) for stereo. Greater viewing distances will result in single- or double-image monoscopic viewing, depending on the position of the viewer.

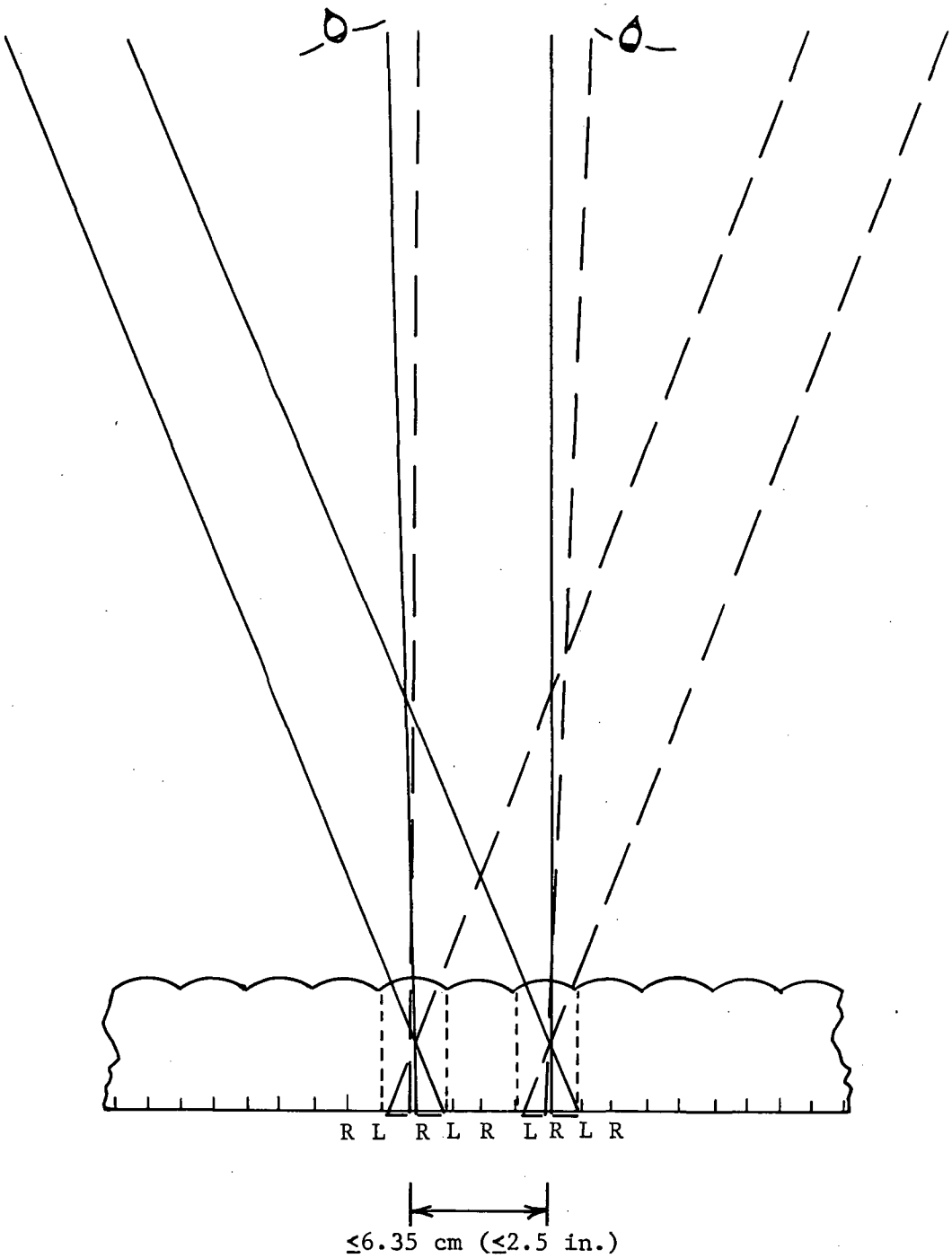

Fig. VII-9 *Image Element Pair Equal to Lenticular Lens Element*

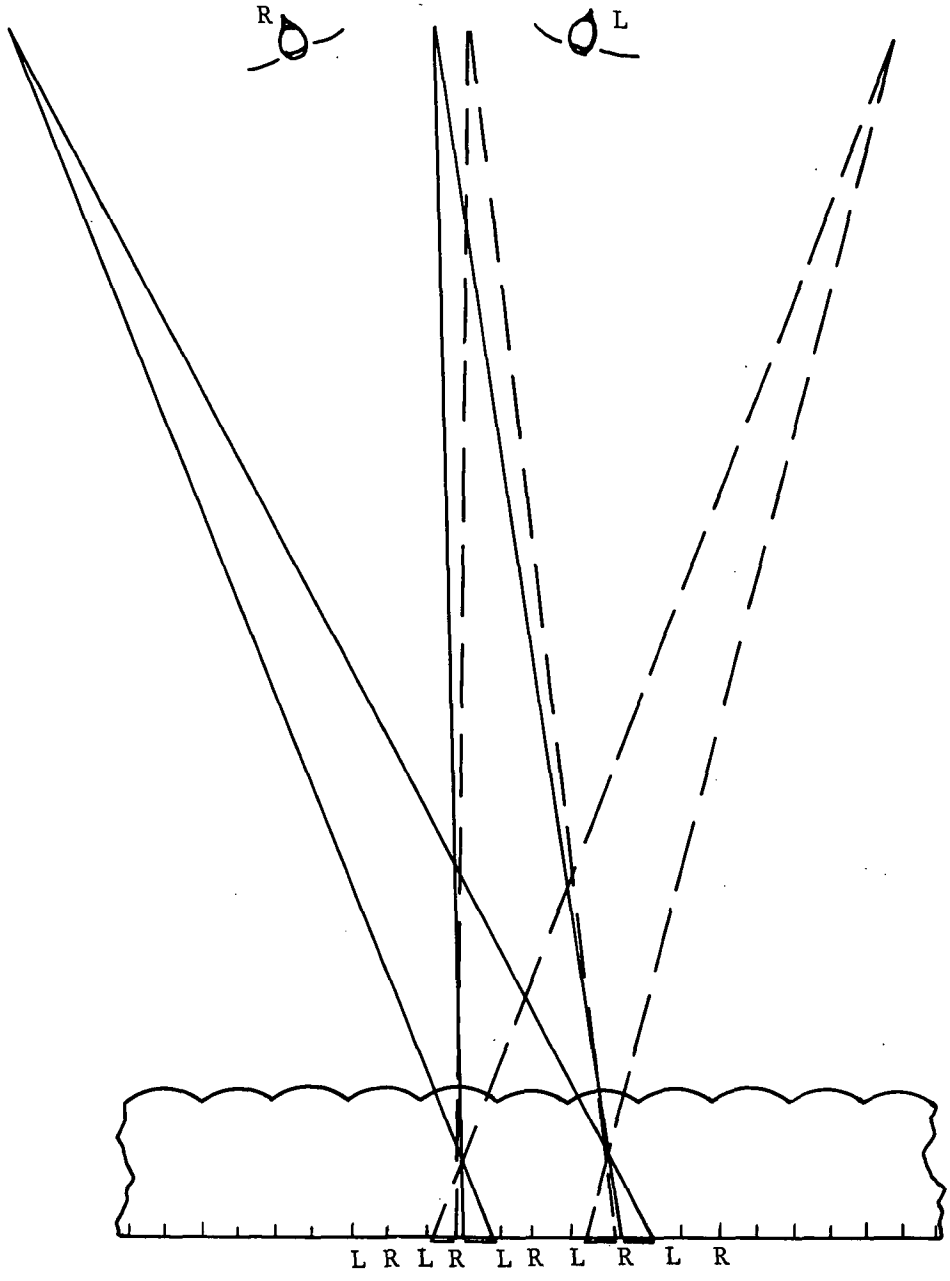

Fig. VII-10 Image Element Pair Greater than Lenticular Lens Element

e. Hardware Alignment Criteria - Hardware alignment is extremely critical in the lenticular stereo display for many reasons. First, if picture resolution is to be maintained, each line pair from the Ronchi rulings used to divide the picture into strips must have smaller dimensions than one resolution element of the original picture. The two pictures must then be interlaced with an accuracy of approximately 10% of the strip width to obtain good stereo separation.

This means that a 15.3-cm (6-in.), 488-line display imaged at unit magnification would require a lateral grating position and stability tolerance of less than $\pm 1.5 \times 10^{-3}$ cm ($\pm 6.1 \times 10^{-4}$ in.) since

$$\frac{\text{Display Size}}{\text{Total Lines}} \times 10\% = \pm 1.5 \times 10^{-3} \text{ cm.}$$

Likewise, a rotational tolerance of less than 18 arc-sec (0.0001 rad) would be required for the same system. The position and stability of the lenticular faceplate must also satisfy these same tolerances. A second set of alignment tolerances arises from the finite depth of focus or depth of field of the projection lens. If the image strips are not sharply in focus on the diffuse back surface of the faceplate, the strips will overlap and a double monoscopic image will result. For unit magnification, the depth of focus (image side of lens) and depth of field (object side of lens) are identical. To avoid redundancy, depth of focus will be discussed with the understanding that the same analysis applies to the object side of the lens for unit magnification.

The concept of depth of focus rests on the assumption that, for a given optical system, defocusing will produce a blur so small that it will not adversely affect the performance of the system. The depth of focus is the amount by which the image may be shifted longitudinally with respect to some reference plane (e.g., the lenticular faceplate) and introduce no more than the acceptable blur. The size of the acceptable blur may be specified as the linear diameter of the blur spot or as an angular subtense of the blur spot from the lens. Thus, the linear and angular blurs (B and β, respectively) and the distance D from the object are related by $\beta = B/D$ for a system in air.

From Fig. VII-11, it can be seen that the depth of field for a system with a clear aperture A can be given by the relationship

$$\delta = \frac{D^2\beta}{(A \pm \beta D)}.$$

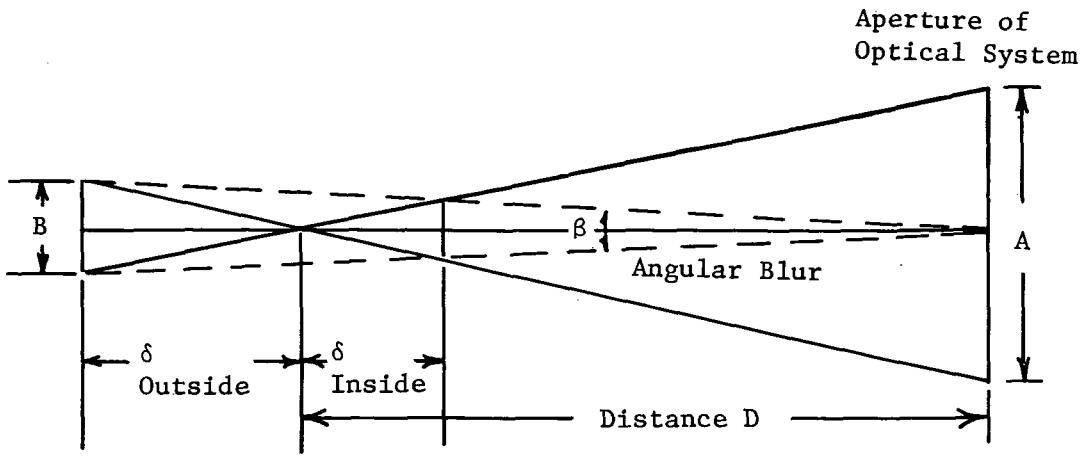

Fig. VII-11 Longitudinal Depth of Focus

When β is small the denominator simply becomes A.

Let us assume that we have a 15.3-cm (6-in.) display and a transfer lens with a focal length of 15.3 cm (6 in.) operating at f/4. For unit magnification, D = 30.6 cm (12 in.), A = 3.8 cm (1.5 in.), and β = B/D. Again we will take B, the acceptable linear blur, to be 10% of the width of an image strip. We then have

$$\beta = \frac{B}{D} = 4.9 \times 10^{-5} \text{ rad}$$

and

$$\delta = \pm\frac{D^2\beta}{A} = 1.2 \times 10^{-3} \text{ cm } (4.7 \times 10^{-2} \text{ in.}).$$

This means that both the display tube and the lenticular faceplate must be positioned and stabilized to the above tolerance along the z-axis (optical axis).

It is possible that these tolerances could be relaxed by a factor of 2 or 3, but some image degradation would result.

f. Display Acquisition - A brief discussion of the ease of acquisition of the lenticular display is difficult. The display image is visible from oblique angles but may appear double, discontinuous, monoscopic, pseudoscopic (with depth reversal), or true stereo, depending on the viewer's distance and angle to the screen. The ease of acquisition of the display in the proper viewing zones for stereoscopic vision is theoretically the same as for the fresnel display in the horizontal and forward directions, and is essentially unlimited in the vertical direction.

g. Ambient Light - Surface reflection of ambient light off the face of the lenticular display is minimal. If desired, that which does exist could be eliminated with antireflection coatings.

A tabular comparison of the lenticular and fresnel stereoscopic displays (Table VII-4) indicates that, with the exception of allowable vertical head movement, the fresnel stereo display is equal or superior to the lenticular display: its illumination efficiency is much higher than that of the lenticular display, and system alignment is not critical or difficult.

Table VII-4 Analytical Comparison of Lenticular and Fresnel Stereo Displays

Parameter	Fresnel Display	Lenticular Display
Resolution	Limited by TV system	Limited by TV system or faceplate (see Fig. VII-9)
Relative Illumination Efficiency	1.0	0.01 to 0.1
Display Size	Up to 30 cm (12 in.)	Up to 15 cm (6 in.)
Maximum Allowable Head Movement		
Horizontal	±3.3 cm (±1.3 in.)	±3.3 cm (±1.3 in.)
Vertical	±7.6 cm (±3 in.)	Unlimited
Forward	±25.4 cm (±10 in.)	±25.4 cm (±10 in.)
Optical System Alignment	Comparable to monoscopic	Critical (see text)
Stereo Display Acquisition	Almost instantaneous with minimal training	Almost instantaneous with minimal training
Reflected Ambient Light	Antireflection coating desirable	Negligible

3. Display Evaluations

To further evaluate the weak and strong points of the two display concepts, a bench setup of each was constructed for subjective evaluation. In addition, a back-projected monoscopic display was assembled for comparison. Identical 35-mm transparencies were used as inputs to the displays.

The fresnel stereoscopic and back-projected monoscopic displays were easily and quickly assembled and aligned. The lenticular display proved much more difficult to align, as the analysis had indicated; and even after it was successfully aligned, periodic fine adjustments were necessary. Because of these inherent alignment problems, the size of the display screen was limited to approximately 7.6 cm (3 in.). For a proper subjective comparison, the other two display screens also had to be limited to 7.6 cm (3 in.). The back-projected monoscopic display and the stereoscopic display are shown in Fig. VII-12 and VII-13, respectively. The lenticular display and a close-up of the imaging optics are shown in Fig. VII-14 and VII-15.

Figure VII-16 shows the three displays placed adjacent to each other for subjective evaluation. Allowable head movement and viewing distance were measured and recorded for a number of subjects using the apparatus shown in Fig. VII-17, and each subject was asked to express his personal display preference.

As shown in Table VII-5, the lenticular display had a very slight advantage. Personal preference, however, strongly favored the fresnel display for comfort, ease of viewing, and stereo acquisition. Furthermore, it was demonstrated that an optional diffuse screen placed over the face of the fresnel display would provide continuous monoscopic viewing of the display from even oblique angles, provided that one of the transparencies was blocked.

Note that in a TV system, single-channel operation could be achieved by simply switching off one monitor. The diffuse screen would then provide continuous monoscopic viewing with reduced display brightness for one or more persons simultaneously. This option would also affect the redundancy of the visual system.

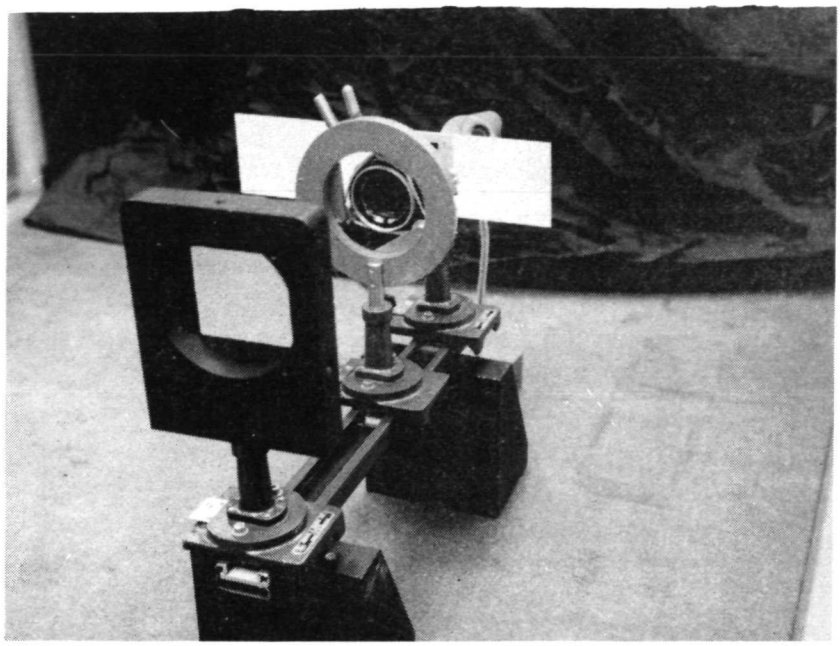

Fig. VII-12 Back-Projected Monoscopic Display

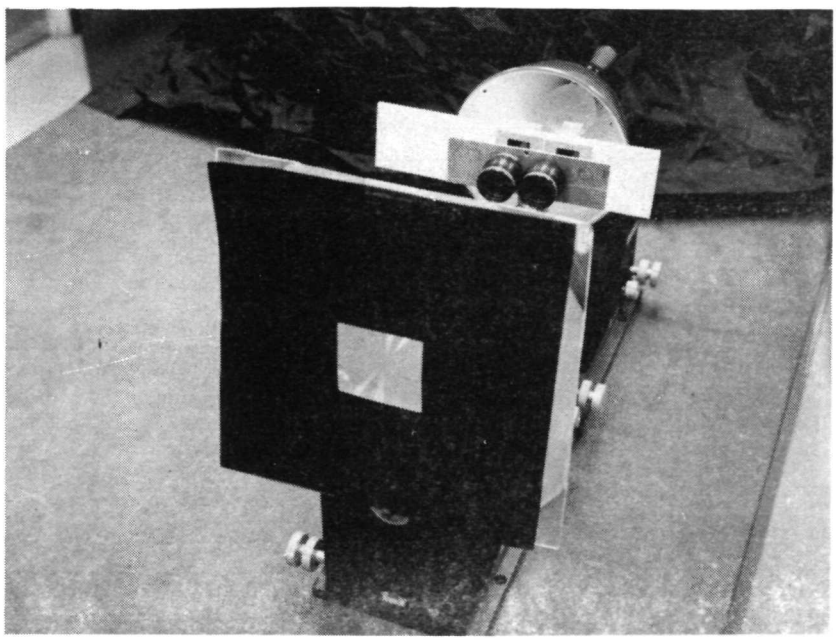

Fig. VII-13 Fresnel Stereoscopic Display

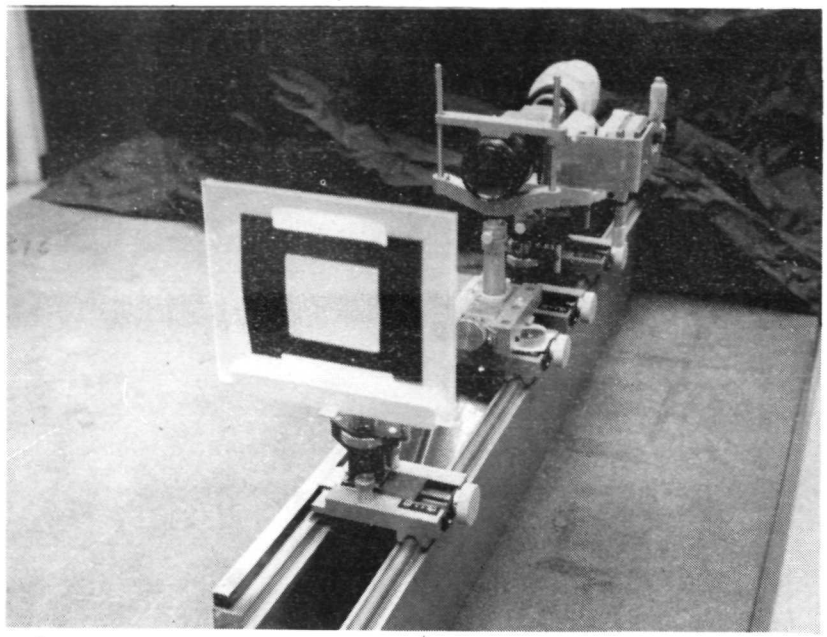

Fig. VII-14 Lenticular Stereoscopic Display

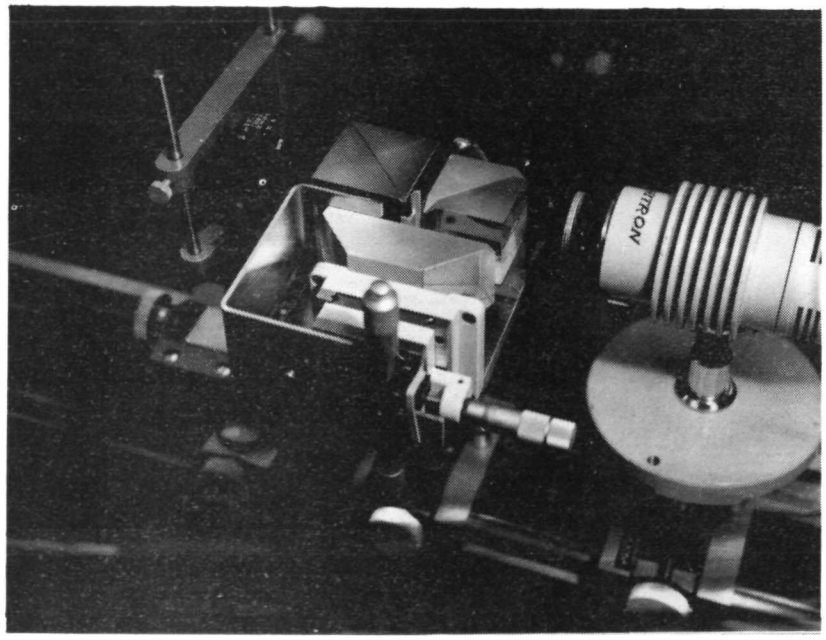

Fig. VII-15 Lenticular Alignment Hardware and Optics

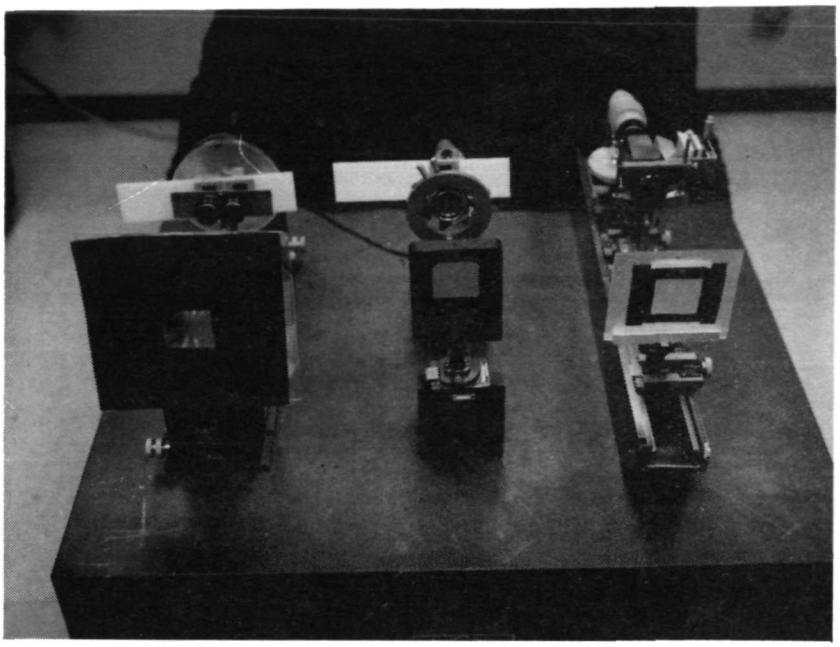

Fig. VII-16 Display Comparison Setup

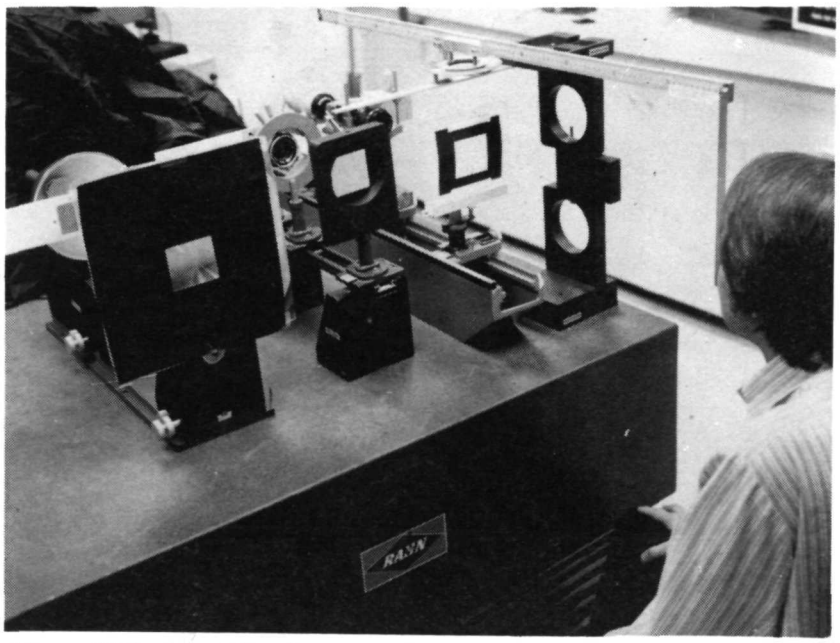

Fig. VII-17 Display Evaluation Setup

Table VII-5 Bench Test Results

	Fresnel Display	Lenticular Display
Horizontal at 53 cm (21 in.) Range	±0.76 cm (±0.3 in.)	±2.0 cm (±0.8 in.)
Vertical at 53 cm. (21 in.) Range	±1.27 cm (±0.5 in.)	±20.3 cm (±8 in.)
Viewing Distance	41 to 107 cm (16 to 42 in.)	25 to 91 cm (10 to 36 in.)

*These measurements were made with actual laboratory breadboard displays. These figures do not represent practical limits.

In light of the alignment difficulties encountered with the lenticular display and the subjective preference for the fresnel display, all subsequent analyses and simulations will be based on the use of a fresnel stereoscopic display subsystem. However, if the requirement arises for two operators to simultaneously view the stereo display, the lenticular display concept will be reevaluated, based on its theoretical multiple-viewer capability.

D. TV MONITORS

In the past, there has been little need for onboard visual display of TV camera video. In fact, the 7.6-cm (3-in.) "Mini-Monitor," a small monochrome companion unit to the Westinghouse Apollo Command Module cameras, is the only unit that has been used on manned missions to date. This monitor accepts a standard 525-line, 60-field/sec, 2:1 interlace video with composite synchronization. It occupies a volume of 1390 cc (85 cu in.) and uses only 2.5 w of power. With suitable magnification, it should be acceptable for use with a fresnel-display, two-camera stereo system. (Recall that a stereo display concept involving a projected image can employ TV monitors much smaller than the display screen, and, consequently, the monitors can be very light and compact.)

The only other manrated TV monitor is the 15.8-kg (35-lb), 60-watt unit that will be used in 1973 on Skylab. This monitor is a *round*, 15.2-cm (6-in.) monochrome unit that accepts standard video. However, in this size range, it will be minimally suitable for direct viewing for FFTO applications.

If larger screens are required, a development program is inevitable. However, a number of military-qualified airborne monitors could be upgraded at a minimum developmental risk. For example, the Conrac Model 3061600--a 20.4-cm (8-in.), solid-state, militarized, airborne video monitor--could be considered a candidate. This unit is a *rectangular* monochrome monitor that weighs 10.4 kg (23 lb) and uses about 100 w. Its overall dimensions (including connectors) are: width, 21.6 cm (8.5 in.); height, 17.1 cm (6.75 in.); and depth, 40.5 cm (16 in.). In addition, 25.4-cm (10-in.), 35.6-cm (14-in.), and 43.2-cm (17-in.) screen versions also exist.

The monitors listed above are all monochrome. They may be used with either monochrome or color video. However, when displaying the output of a sequential camera, an undesirable feature will occur. For example, consider an Apollo color camera observing a satellite that has been painted white. The white paint contains the full visual spectrum, including the filter colors of the rotating color wheel in the TV camera. Thus, all three sequential frames--red, blue, and green--will "see" a light object; all three frames will look the same, and the monitor will display a good, flicker-free black-and-white picture.

Next, assume the satellite is painted a deep red. Now the satellite will appear dark during the frames taken through the blue or green filters, and light during the frame when the red filter is placed in the optical path. Now the black and white monitor will display a picture in which the satellite appears dark two-thirds of the time and light one-third of the time. The result will be an objectionable 10-Hz "flicker" on the monochrome monitor.

Extending this effect, it can occur in any colored object under observation; and the deeper the color saturation, the more pronounced the "flicker." Scan conversion can be employed to "hold" and display only the scenes taken through a single filter, but the converter presents technical development problems that have not yet been solved for use in space.

A color monitor has been under development for potential space use. The prototype 30.5-cm (12-in.) unit uses a "Trinitron" cathode ray tube to maximize resolution capabilities. Currently, the development has been halted after completion of the prototype and requires considerable additional work before it can be qualified. Without scan conversion, this monitor suffers from the same "flicker" problem as the monochrome types, except that the object will "flicker" in its proper color. An acceptable color picture without "flicker" could be produced without scan conversion by using a simultaneous color camera such as the "crossed-stripe" camera discussed earlier.

Typical monitor characteristics for each type of display are shown in Table VII-6.

Table VII-6 Typical Monitor Characteristics

Parameter	Mono*	Stereo
Number Required	1	2
Monitor Size	30.5 cm (12 in.)	7.6 cm (3 in.)
Power	60 w	1.6 w
Volume	27,000 cm^3 (1600 $in.^3$)	1390 cm^3 (85 $in.^3$)
Weight	11.3 kg (25 lb)	2.5 kg (5.4 lb)
Monochrome	State of the Art	Space-Qualified
Color	Developmental	Developmental

*Assumes a 30-cm (12-in.) monitor is required to give a 30-cm (12-in.) display because of light loss due to rear-projection techniques.

E. DEPLOYMENT/ARTICULATION

The analysis of the deployment/articulation subsystem, being primarily based on requirements for the FFTO working volume/working site, provides one of the most challenging problems associated with any visual subsystem, basically in two areas: (1) the number of views required and (2) the required location of these views (i.e., cameras). The first area is primarily task-dependent, while the second is based on optimizing operator performance. Both areas require man-in-the-loop simulations. However, some preliminary considerations are easily established analytically.

General guidelines were provided in the statement of work relating to the operational coverage the visual system sensor must provide. These guidelines are:

1) The system's field of view (FOV) shall accommodate the working volume of the manipulators;

2) The working volume and working site for the visual system are based on three typical applications of manipulative devices. The applications include using an FFTO for (a) satellite maintenance (using a general-purpose manipulator); (b) satellite retrieval (using a retrieval device); (c) satellite inspection.

In support of these typical applications, further dimensional requirements were imposed. *Satellite maintenance*, as shown in Fig. VII-21, defines the working volume and the working site as follows:

1) Working Volume

$-1.22 \leq x \leq 1.83$ m ($-4 \leq x \leq 6$ ft)

$-1.83 \leq y \leq 1.83$ m ($-6 \leq y \leq 6$ ft)

$-1.83 \leq z \leq 1.83$ m ($-6 \leq z \leq 6$ ft)

except for the volume occupied by the vehicle, which is defined by:

$-1.22 \leq x \leq 0$ m ($-4 \leq x \leq 0$ ft)

$-0.92 \leq y \leq 0.92$ m ($-3 \leq y \leq 3$ ft)

$-0.61 \leq z \leq 0.61$ m ($-2 \leq z \leq 2$ ft)

2) Working Site

- This shall be an area 1.22 m (4 ft) square located anywhere in the working volume, with its surface oriented perpendicular to the X-axis ± 20 deg (±0.349 rad).

- The vehicle will be attached to the working site at three points.

- Access to both sides of the surface is required.

- The distance between the vehicle and site shall be $0.31 \leq x \leq 1.83$ m ($1 \leq x \leq 6$ ft).

Figure VII-18 shows the *dimensional* constraints for *satellite retrieval*. These are defined as follows:

1) Working Volume

$0 \leq x \leq 6.1$ m ($0 \leq x \leq 20$ ft)

$-7.6 \leq y \leq 6.1$ m ($-25 \leq y \leq 20$ ft)

$-7.6 \leq z \leq 6.1$ m ($-25 \leq z \leq 20$ ft)

2) Working Site

- This shall be a circular area with a maximum diameter of 4.6 m (15 ft), located anywhere within the working volume, with its surface oriented perpendicular to the X-axis ± 45 deg (±0.785 rad)

- The distance between the vehicle and satellite at contact shall be $1.5 \leq x \leq 6.1$ m ($5 \leq x \leq 20$ ft).

Finally, Fig. VII-19 defines the requirements for a spinning/nutating satellite as:

1) Working Volume

- This shall be defined by a stable or nutating satellite 4.6 m (15 ft) in diameter by $\leq$ 18.4 m ($\leq$ 60 ft) long, with a nutation angle of ±45 deg (±0.785 rad) maximum.

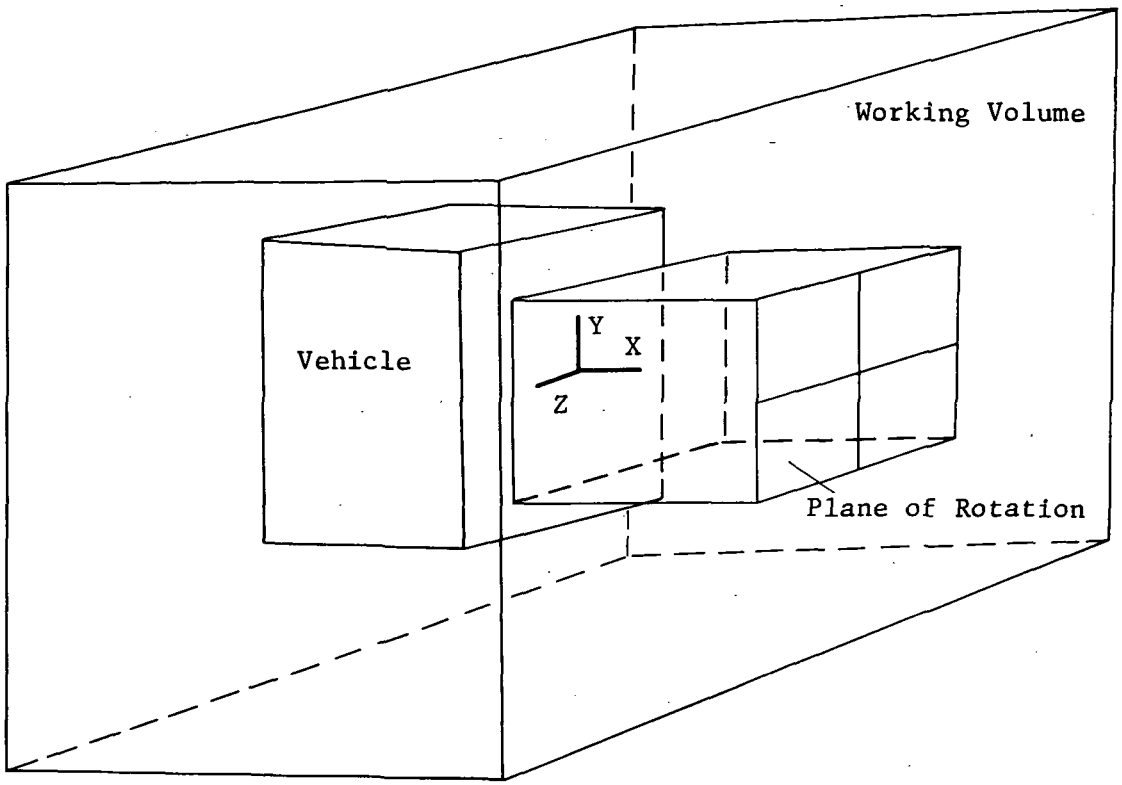

Fig. VII-18 Satellite Maintenance

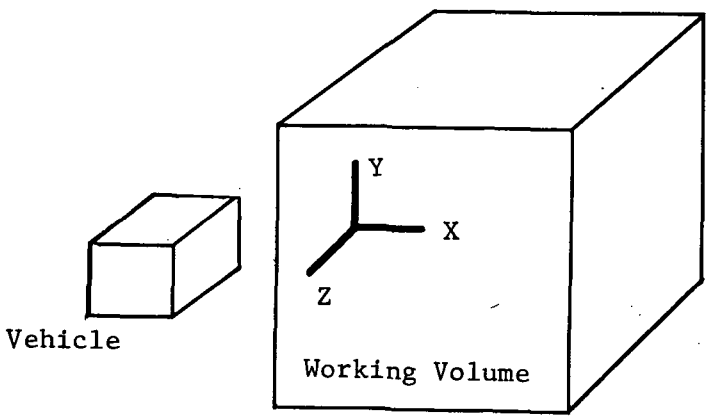

Fig. VII-19 Satellite Retrieval

2) Working Site

- Consists of the surface area of the satellite and its appendages

- Spin about roll axis: $\leq$10 rad/sec ($\leq$573 deg/sec)

- Angular rate of nutation: $\leq$1 rad/sec ($\leq$ 57.3 deg/sec)

- Distance to site: $\leq$3.05 m ($\leq$10 ft)

This application is considered to have three cases for satellite inspection/retrieval:

1) Case 1 - Inspection: The FFTO is capable of maneuvering perpendicular to the spheres defined above.

2) Case 2 - Longitudinal Retrieval: The FFTO will attach on the longitudinal axis, as shown in Fig. VII-20.

3) Case 3 - Center-Point Retrieval: Retrieval will take place within a volume ±3.05 m (10 ft) on all axes from the node shown in Fig. VII-21.

The deployment/articulation requirements for these cases are based on the sensor location requirements, and fall into four categories:

1) Sensor fixed to the FFTO;

2) Base of sensor fixed; sensor provided with a variable line-of-sight (LOS);

3) Sensor with variable base and variable LOS;

4) Sensor attached to the FFTO manipulator.

As shown in Fig. VII-22, only categories 2 and 3 require an articulation/deployment subsystem.

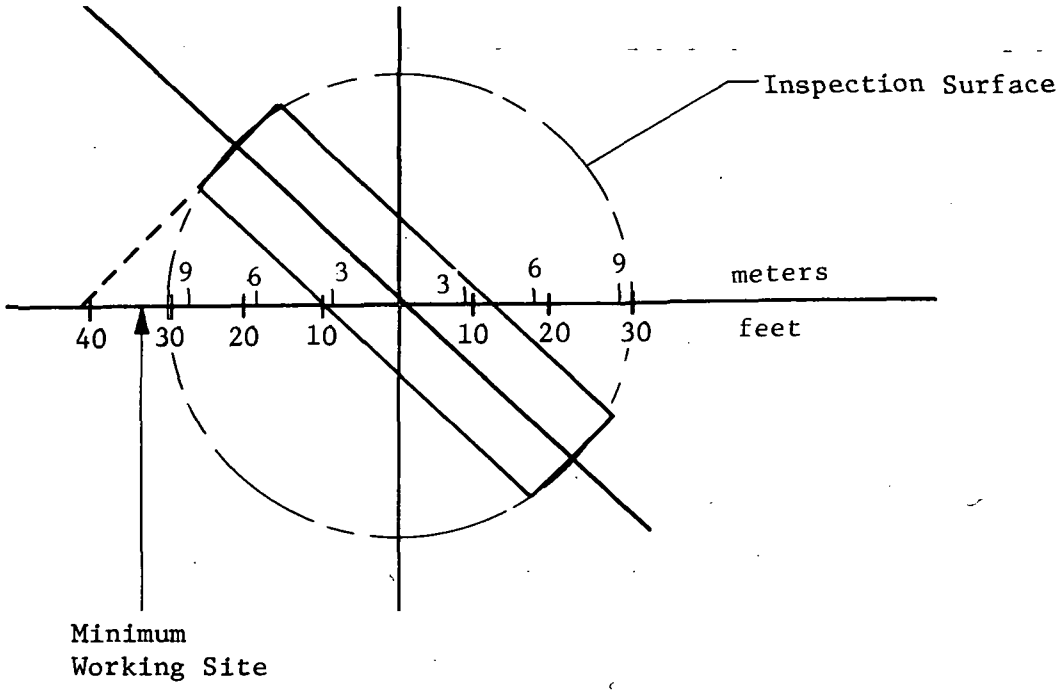

Fig. VII-20 Longitudinal Retrieval

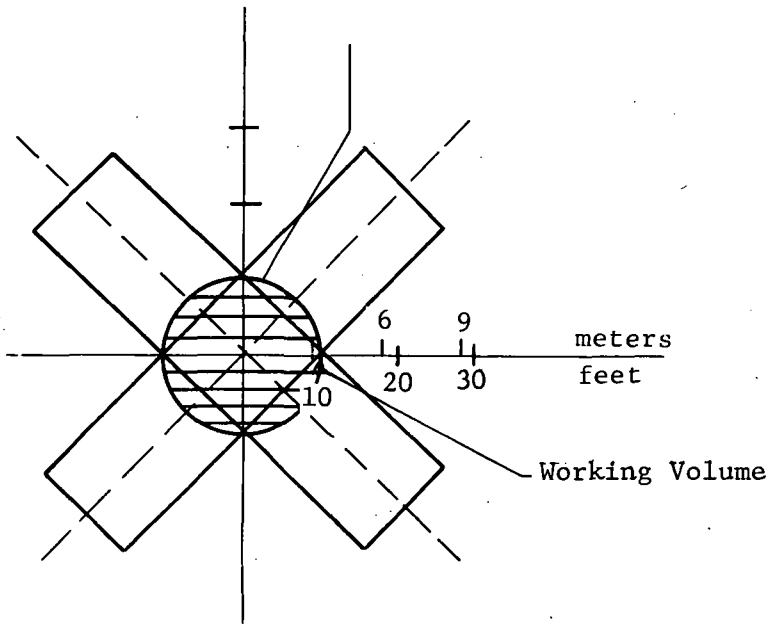

Fig. VII-21 Nodal Retrieval

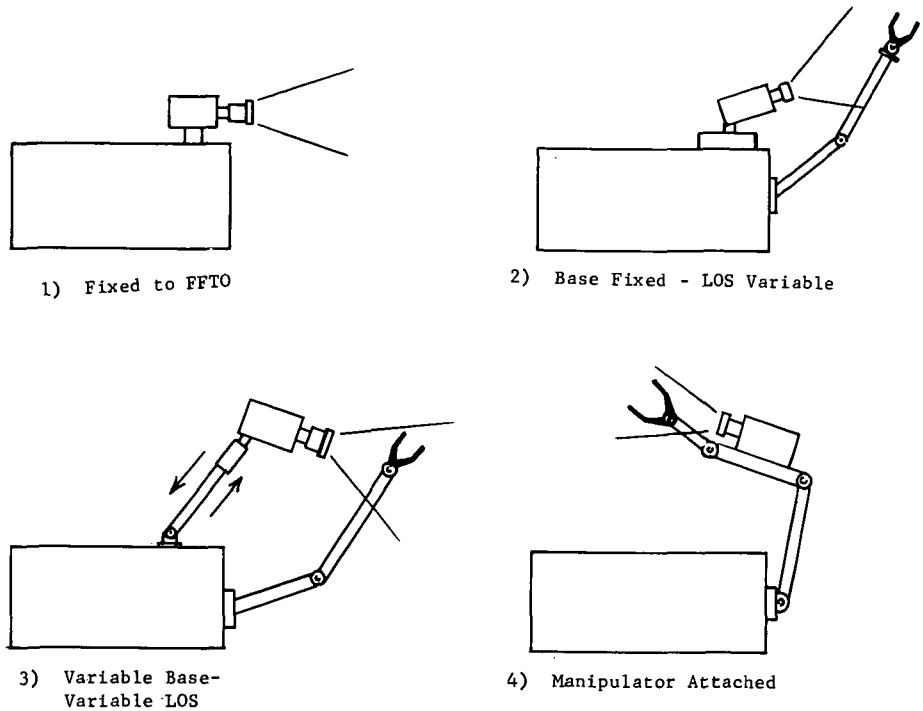

Fig. VII-22 FFTO Sensor Locations

1. Fixed-Base Configuration

If the visual sensors are rigidly attached to the FFTO, the system has an advantage in that the view will probably be aligned to the FFTO control axis.

Thus, camera control is minimal and the field of view is sufficient for some tasks, such as docking and flyaround inspection. Satellite maintenance, however, presents the most stringent requirements on the visual system, primarily due to the back-surface vision required. Using the fixed-sensor configuration, no back-surface vision is possible.

For example consider a fixed sensor and assume that visual information is available anywhere within the volume of a cone described by the FOV angle and the perpendicular distance from the image. Thus, the volume covered by a 60-deg (1.047-rad) FOV fixed sensor at a distance of 3.05 m (10 ft) is approximately 10.6 cu m (375 cu ft). In contrast, the net working volume for satellite maintenance (no plane included) is 37.5 cu m (1344 cu ft). If an average value is used for the cone height within the working volume, then the

number of 60-deg (1.047-rad) FOV sensors required--independent of sensor position, and with no visual overlap--is forty five. Using the same assumptions for satellite retrieval, at least 11 sensors would be required.

In satellite inspection/retrieval, only one sensor is required for Case 1, assuming that the entire area does not require simultaneous viewing. At a position 3.05 m (10 ft) from the inspection sphere, less than four vehicle attitude orientations or four individual sensors are required to view one-half of the surface. The variable in this viewing situation is the surface that is normal with respect to the sensor.

For case 2, longitudinal retrieval, an FFTO-attached sensor will not provide adequate vision at the 45-deg (0.785-rad) maximum nutation angle and the maximum distance [3.05 m (10 ft)] from the work site. Instead, the minimum required distance for minimum viewing angles is 4 m (13 ft). And even at this distance, simultaneous viewing requires twelve 60-deg (1.047-rad) FOV sensors.

Covering the viewing area at the maximum distance for center-point retrieval, using the area assumptions previously discussed, requires a minimum of three sensors.

2. Fixed-Base, Variable-LOS Configuration

This category allows the sensors to pan/tilt about a fixed location on the vehicle. The most advantageous positions on the vehicle are at the diagonally opposed corners of the FFTO, provided that the FOV has a pan of ±180 deg (±3.142 rad) and a tilt angle of ±90 deg (±1.571 rad), as defined in Fig. VII-23.

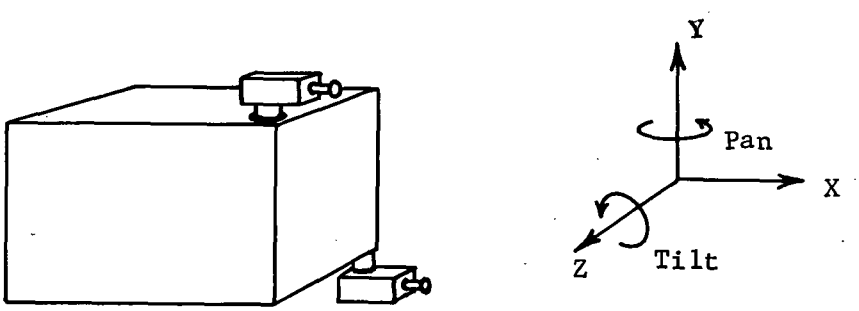

Fig. VII-23 Fixed-Base, Variable-LOS Configuration

For satellite maintenance, this configuration provides visual information on the entire working volume, including vision on the working site at the minimum distance from the vehicle [assuming visual information is significant at 75 deg (1.309 rad) from the plane of the working site]. The configuration, however, can lead to occlusion of the work site and does not provide back-surface vision. Nevertheless, the two-sensor system does provide an adequate FOV for satellite retrieval and the satellite inspection/retrieval tasks. Longitudinal retrieval will still require a minimum separation distance of 4 m (13 ft) at the maximum nutation angle.

3. Variable-Base, Variable-LOS Configuration

This category is the first to provide back-surface vision for satellite maintenance and is considered to use both fixed-length and extendable booms. The most favorable location for the boom is at the forward corner of the vehicle since this gives maximum separation from the manipulator and minimize interference. The base should be capable of accommodating boom pitch and yaw angles of +90 deg (1.571 rad) and ±90 deg (±1.571 rad), respectively, and should allow the sensor to pan through ±180 deg (±3.142 rad) and tilt from +180 deg (+3.142 rad) to -105 deg (-1.833 rad) (see Fig. VII-24).

A long, fixed-length boom increases the operators vision of the back of the work site, but imposes a requirement to use an additional sensor in the center of the vehicle. This extra sensor is used (1) when the boom-mounted sensor's view of the front of the work site is occluded by the vehicle and (2) when the use of the fixed-length boom results in a large angle between the sensor's line of sight and a plane normal to the working surface (see Fig. VII-25).

Each 60-deg (1.047-rad) FOV sensor will have four positions for viewing the entire work surface at the minimum distance from the vehicle. The minimum boom length for worst-case maintenance (i.e., when back-surface vision is required and when the boom must extend diagonally across the top of the work site) is approximately 3.05 m (10 ft). If the work site is then rotated through the permissible ±20 deg (±0.349 rad), the opposite edge of the surface is moved toward the vehicle so that boom length does not have to be increased.

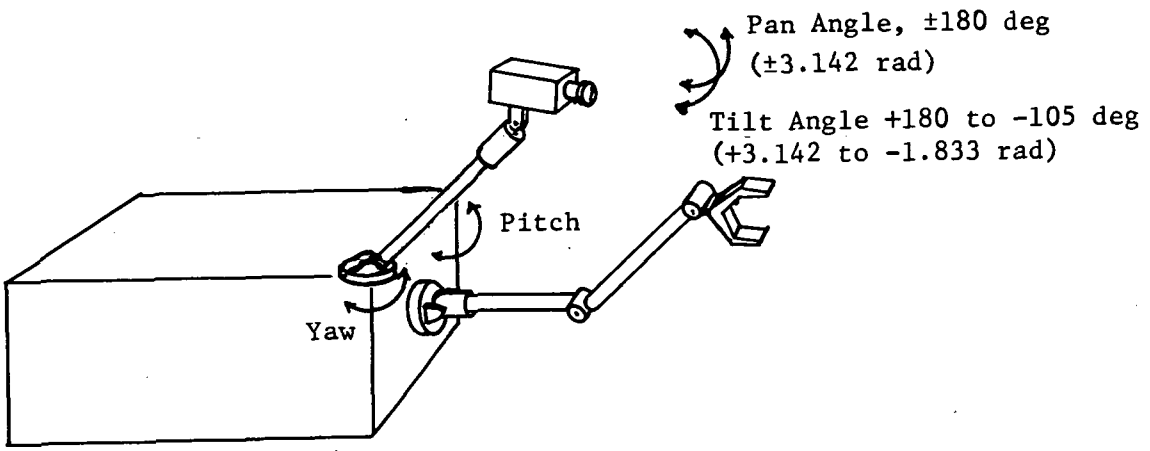

Fig. VII-24 Variable-Base, Variable-LOS Configuration

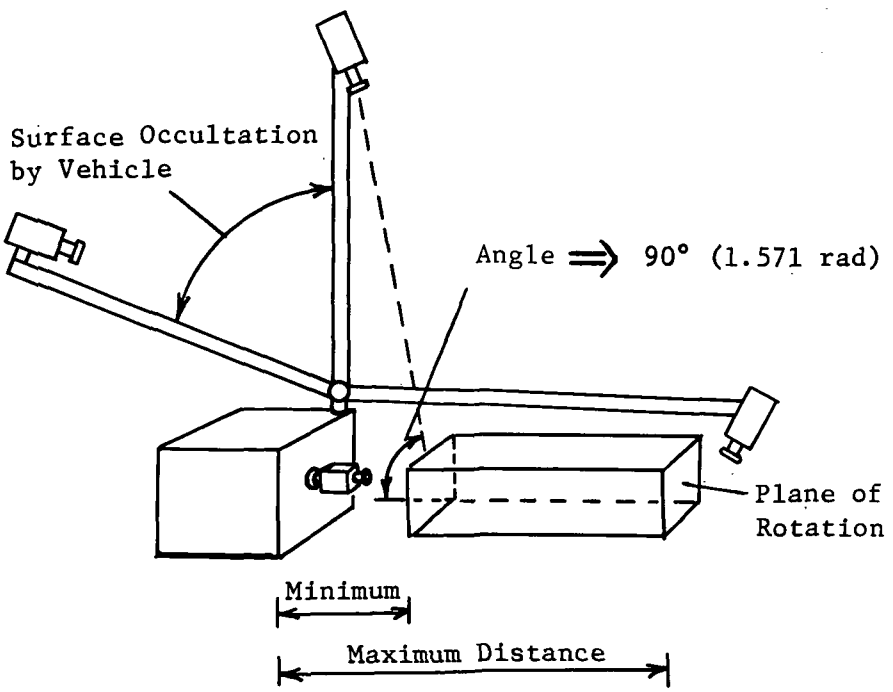

Fig. VII-25 Fixed-Length Boom Geometry

If an elbow is used on the boom to vary the base, interference between the work surface, the manipulator, and the dedicated boom may become a significant problem due to the volume used by the elbow and the two articulated lengths.

From a visual sensor standpoint, the main difference between using the fixed-length boom and the extendable boom (furlable tube) involves the deployment method. But in the latter case, only one sensor is required since the extendable boom can be deployed between the work site and the vehicle (Fig. VII-26). The variable-base, variable-LOS category also offers advantages in providing a flexible (several-sided) view at the work site.

For satellite retrieval, the distance required for a 60-deg (1.047-rad) FOV sensor to see the 4.6-m (15-ft) diameter of the satellite is 3.7 m (12.5 ft), with the sensor perpendicular to the end of the satellite; and the worst-case boom length is 10.4 m (34 ft).

For satellite inspection/retrieval, the variable-base, variable-LOS configuration provides adequate viewing. However, longitudinal retrieval, assuming a worst-case nutation angle, requires a boom length of 10 m (33 ft).

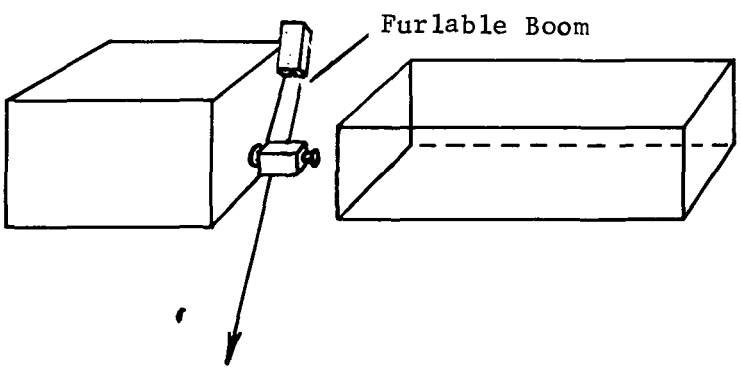

Fig. VII-26 Extendable-Boom, Variable-Base, Variable-LOS Concept

4. Manipulator-Attached Configuration

From a visual standpoint, it is necessary to assume that the manipulator can reach any location within the specified working volumes. Thus, the visual system need only interface with the functional requirements of the manipulator to minimize the occultation of the FOV by the manipulator. A recommended configuration is to mount a two-degree-of-freedom sensor on the longitudinal axis of the last manipulator segment so that the sensor can rotate around the end of the segment and tilt perpendicular to its axis.

The occultation can be further minimized in two ways:

1) Deploy the sensor on an extendable boom 1 m (3.25 ft) long;

2) Use a second sensor on the next (inboard) segment of the manipulator.

The manipulator-attached sensor represents the simplest configuration capable of performing within the total working volume. The sensor controls required to track the manipulator will be minimal and, depending on the task, the operator can control the sensor manually. However, this configuration has a disadvantage in that the view from the sensor presents a "moving window" to the operator, whereas the deployed, dedicated boom presents the manipulator moving within a "static window." Despite this, the problems associated with this effect can be minimized by providing a FFTO position-holding capability. Thus, the operator would know the motion of the manipulator arm, viewed from the sensor, relative to the FFTO.

Figure VII-27 is a simplified summary of the boom length required to meet visual requirements. The figure indicates that:

1) Simplified inspection, front-side maintenance, and retrieval tasks can be accomplished with FFTO-attached sensors;

2) Complex inspection, front-side maintenance, and retrieval tasks can be accomplished using two fixed-base, variable-LOS sensors;

3) Back-surface maintenance requires a variable-base, variable-LOS sensor on a boom at least 3.05 m (10 ft) long;

4) Inspection and retrieval of a nutating satellite requires a dedicated boom for the sensor or a manipulator-attached sensor.

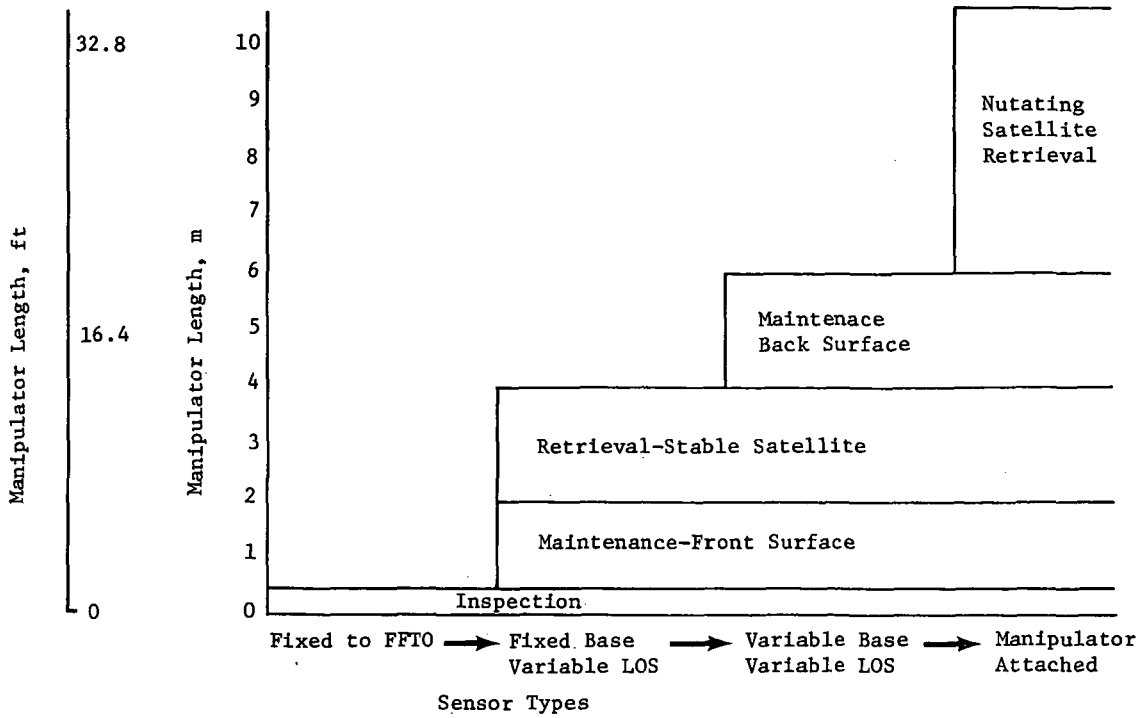

Fig. VII-27 Visual Requirements Summary

5. Deployment

Although the exact method used to pan, tilt, and deploy the sensors remains task/configuration-dependent, several space-qualified mechanisms already exist. The pan-tilt gimbals for the Apollo lunar roving vehicle-TV control unit, the Viking high-gain antenna, and the pointing head for the Skylab T027 photometer are typical examples. Sensor deployment can also be accomplished using extendable devices, such as furlable booms, or fixed-length jointed members that may have either one degree of freedom or two degrees of freedom, similar to the pan-tilt gimbals between the member. The technology used in placing the sensor can also take advantage of manipulators and their articulation devices.

a. Pan-Tilt Devices - The Apollo TV control unit is a 5.7-kg (12.6-lb) device that serves as a pan-tilt mount for the color TV camera and permits manual or ground-controlled TV coverage from the Apollo lunar roving vehicle. The azimuth/elevation pedestal allows the TV to pan over 170 deg (2.967 rad) right and left of forward, and to tilt from 45 deg (0.785 rad) below to 85 deg (1.484 rad) above horizontal. The drives are geared stepping-motors that provide a pan rate of 3.03 deg/sec (0.053 rad/sec) and a tilt rate of 3.12 deg/sec (0.055 rad/sec).

The TV control unit receives a 70-kHz modulated subcarrier signal from the lunar communications relay unit, decodes this signal, and executes valid real-time commands.

The Viking high-gain antenna is mechanically pointed about two axes by the onboard guidance and control sequencing computer. The assembly can orient the beam through an elevation of +90 deg to -22 deg (+1.571 rad to -0.384 rad) and an azimuth of ±338 deg (±5.899 rad) with an error of $\leq$0.7 deg ($\leq$0.012 rad) throughout the entire pan-tilt range. The antenna moves in 0.30-deg (0.005-rad) steps at angular rates up to 0.60 deg/sec (0.010 rad/sec). The pointing mechanism uses 3.5 w.

Unless power is applied the antenna will remain fixed within the pointing error. Since the antenna is designed to maintain its pointing accuracy under the loads imposed by the Martian environment (including surface winds and temperature gradients), a similar mechanism should be able to withstand the dynamic loads imposed by the visual system tasks.

The Skylab T027 mast has a gimbal mechanism that can either be pointed manually or by automatic programming. The azimuth and elevation are controlled by two 400-Hz, square-wave, synchronous electric motors that operate at rates up to 4 deg/sec (0.070 rad/sec). The elevation sweeps from 0 to 112.5 deg (0 to 1.964 rad), and the azimuth, from 0 to 354 deg (0 to 2.033 rad).

b. Extendable Devices - The Experiment T027 photometer is deployed using an extendable/retractable scissors-like mechanism containing some 368 links and 44 spider assemblies. The mast is designed to be operated manually, but drive mechanisms could be developed.

Furlable booms operate on the principle that the thin metal element has a lower potential energy when deployed. The metal element is stored on a spool in such a manner as to remain within the material's elastic limit. No permanent strain is introduced to the material, thus guaranteeing that it always returns to its tubular form, even after repeated extensions and retractions.

When subjected to a compressive end load, the typical element eventually fails due to local buckling. Long furlable elements behave like typical columns, so the Euler equations for column buckling can be used. When subjected to repeated bending, the elements eventually fail due to local buckling at the edges of the element caused by high local stresses. The torque at which an element fails by local buckling is relatively small unless the edges of the elements are interlocked.

Several tubular configurations have been developed to enhance the physical properties of the furlable elements. These mechanisms have been space-qualified and used for a number of space activities, including satellite stabilization and instrument deployment.

The Viking surface sampler consists of an electromechanically operated collector head that can be deployed to multiple sampling sites up to 3.04 m (10 ft) from the lander within a 120-deg (2.094-rad) arc. The deployment of the collector head is accomplished by a gimbaled, furlable-tube boom. The sampler head is capable of 360-deg (6.283-rad) rotation for sample-sieving activities.

The gimbaled base has an elevation rotation rate of 45 deg/minute (0.785 rad/minute) and elevation limits of 45 deg (0.785 rad) up to 50 deg (0.873 rad) down from the horizontal. The azimuth rotation rate is 180 deg/minute (3.142 rad/minute), with +90-deg to -205-deg (+1.693-rad to -3.578-rad) travel limits.

The boom has a mass of approximately 7.3 kg (16 lb) and extends/retracts at a rate of 0.76 meter/minute (2.5 feet/minute). At 3.3 m (133 in.) the extension force is 133 N (30 lb); the retraction force is 89 N (20 lb); and the elevation force is 17.75 N (4.5 lb).

The boom is digitally controlled and programmed to sample at eight different locations at 24-deg (0.419-rad) increments. The net resolution is 0.5 deg (0.008 rad) in elevation, 0.18 deg (0.003 rad) in azimuth, and 0.5 cm (0.23 in.) for extension/retraction. The boom requires 50 w of peak power and 25 w of nominal power.

F. TELECOMMUNICATIONS

1. General Discussion

The basic function of the telecommunication subsystem (TCS) is to provide the video, data, and control links between the remote control station and the visual system aboard the FFTO. Since both the preliminary visual system candidates (monocular and stereo) use TV cameras as the sensors, the range of telecommunication concepts becomes restrictive.

The camera control signals and data (other than video)--even for several cameras--require a very low information rate, probably less than that for certain other subsystems aboard the FFTO. Therefore, all low-data-rate signals can be multiplexed together and transmitted or received via the RF link used for FFTO control and monitoring.

The variety of visual system concepts will have little effect on the sizing of that system and will not be given further consideration in this phase, except to specify the signals that are needed. However, it should be noted that video transmission requires a bandwidth far in excess of that needed by any other FFTO subsystem.

The number and type of TV cameras greatly influence the size, weight, and power consumption of the TCS. Because the number of cameras required will be determined during man-in-the-loop simulations, this discussion will consider the basic capability needed to accommodate simultaneous operation of two or three cameras and will be modified if required, based on simulation results. As previously described in Section A of this chapter, the available TV cameras will conform to the 525-line, 30-frame-per-second format and have a bandwidth of 5 MHz per camera.

2. Choice of Frequency

The choice of the video transmission frequency will probably be influenced by commonality with the control and data links. However, the visual system may well be the determining factor in such a selection for the entire FFTO communications. The following discussion will concentrate on the advantages and disadvantages of two practical frequency bands: S-band and VHF.

Frequency selection is complicated by a number of factors. As the wavelength is reduced, a conductive body of given dimensions becomes a better reflector; and when an electromagnetic wave is reflected it undergoes a 180-deg (3.142-rad) reversal in phase. If the incident wave and reflected wave travel nearly the same path length, thus arriving at the receiving port at the same time, they will tend to cancel and there will be "dead spots" in the desired working volume.

At S-band (2100 MHz) the wavelength is 15 cm and many surfaces on the Shuttle and/or the satellite are capable of reflecting the waves. At 300 MHz, the upper end of the VHF spectrum, the wavelength is seven times that at S-band and the reflection problem is obviously less. From the standpoint of multipath reflections, VHF is a better choice. However, other factors are involved.

Polarization of the wave by the transmitting antenna can greatly reduce the problem of reflection at S-band. For example, assume the wave is given a right-hand circular polarization. When the transmitted energy is reflected, its polarization also reverses--in this case to left-hand circular. Now, when the reflected signal reaches the receiving antenna it has the opposite polarization. Thus, a wave must be reflected twice before it is accepted by the receiving antenna. The likelihood of a double reflection is less, and nonspecular reflection will further reduce the intensity, making "dead spots" about as rare as with VHF.

Another consideration is that an antenna for 2100 MHz is one-seventh the size of an antenna for 300 MHz. S-band antennas can therefore be made either smaller and lighter, or can be endowed with better directional characteristics for a given volume.

In addition, more S-band frequencies are authorized for satellite communications than at VHF, and more space-qualified S-band transmitting equipment has been developed.

The primary drawback to using S-band is that efficiency of the transmitter chain is presently much lower than that for VHF in lightweight, solid-state equipment: normally, twice the input power is required at S-band for the same output power. In spite of this poorer efficiency S-band is a better overall choice than VHF for the visual system TCS unless there is a severe power problem.

3. Antenna Configuration

The high transmitted bandwidth of the video-modulated RF carrier will result in a higher effective radiated power (ERP) than that for low-bandwidth data signals. The ERP is a function of the actual RF output power and the gains of the transmitting and receiving antennas. Three antenna configurations will now be evaluated to determine the RF power required for one transmitter containing a single 5-MHz video channel. These configurations are as follows:

1) Omnidirectional arrays on both the FFTO and the Shuttle;

2) An omnidirectional array on the FFTO and 90-deg (1.571-rad) sector coverage antennas on the Shuttle;

3) A steerable antenna on the FFTO and a 90-deg (1.571-rad) sector coverage antenna on the Shuttle.

The basic equation for the RF power required.

$$P_T = \frac{(S/N)\ BKT\ (4\pi R/\lambda)^2\ F}{G_T G_R MP},$$

where

P_T = required transmitter power (dependent variable)

S/N = carrier signal-to-noise ratio = 13 db,

B = bandwidth = 5 MHz,

K = Boltzmann's constant = 1.38×10^{-23},

T = receiver noise temperature = 290°K,

R = range of Shuttle to FFTO (independent variable),

λ = carrier wavelength = 15 cm (5.91 in.)

F = receiver noise = 5 db,

G_T = transmitter antenna gain (depends on Configuration),

G_R = receiver antenna gain (depends on Configuration),

M = margin = -0 db,

P = polarization mismatch loss = -3 db.

Substituting known quantities, the final equation for evaluating required transmitter power for a given configuration and range is

$$10 \log P_T = -78.8 + 10 \left(2 \log R - \log G_T - \log G_R\right).$$

This equation is plotted for the three antenna configurations in Fig. VII-28. It can be clearly seen that the steerable array configuration requires far less transmitted power at the specified maximum range of 3048 m (10,000 ft) than the other two concepts--17 mw as opposed to 1.3 and 5 w.

The important result is that each of the configurations requires a transmitted power that is easily realizable at this range. However, if this range is extended by a factor of 10, then the power required for configurations 2 and 3 goes to 130 and 500 w, respectively, which is no longer practical. In such a case the steerable array, which would require only 400 mw, would be the logical choice.

The primary drawback to a steerable antenna system is its complexity. It must contain electronic circuits to determine the pointing error and a servomotor system to reposition the antenna as required. In addition, it must be capable of searching for the Shuttle if some maneuver puts the FFTO in an obscured location or at a positioning limit. The steerable array that was baselined in the above calculation is the one designed for the Viking lander. This array weighs 7.26 kg (16 lb) and has a 76-cm (30 in.) parabolic reflector.

The maneuverability of the FFTO must be matched by even greater pointing response of the antenna. Therefore, unless the power requirement is too great for a fixed antenna array, the added complexity and lowered reliability of a steerable antenna are not justified.

For the FFTO/Shuttle video link, which is restricted to a maximum range of 3048 m (10,000 ft), using an omnidirectional antenna on the FFTO and a 90-deg (1.571-rad) sector coverage antenna on the Shuttle offers a good compromise between complexity and system power. A 2-w transmitter in the 2100-MHz frequency band requires no development, will meet all requirements, and will draw about 25 w of spacecraft primary power.

4. Effect of Long-Range Operation

In the event that ground control of the FFTO and direct reception of FFTO video are needed, some perturbations in the nominal FFTO/Shuttle telecommumications link will be required.

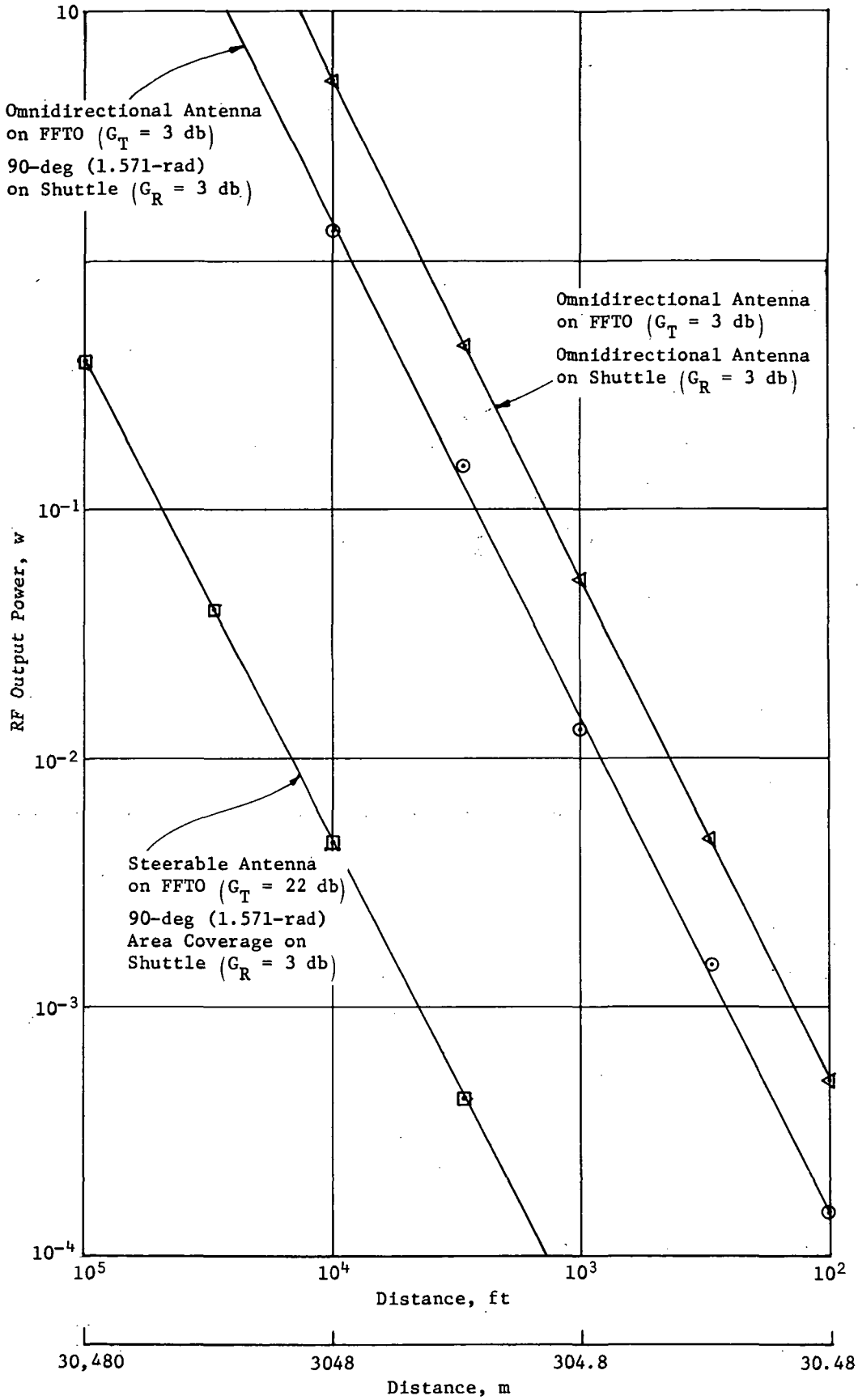

Fig. VII-28 RF Output Power Required Vs Antenna Range

The range of the communications link can be increased by manipulating three variables: bandwidth, radiated power, and antenna gain. A reduction in bandwidth can be accomplished in a number of ways. The simplest of these is to reduce the horizontal scan rate either by relaxing the resolution requirements or reducing the frame rate. The present state of the art provides little margin for reducing the resolution; in fact, an increase is desirable. Reducing the frame rate will require scan conversion, which is practical on the ground but not yet developed for space use. Thus, using the same system for both short and long distances necessitates using a dual scan-rate system, which would be in a developmental category. Other methods of bandwidth reduction, such as data compression, are warranted only for long-duration interplanetary flights; for earth-orbital applications, there are more desirable ways of achieving highly reliable communications.

By 1975 it may be possible to use a solid-state S-band transmitter having an output power of 10 w. With this output power and the FFTO omnidirectional communications system previously discussed, the maximum range (R) from the ground-based station will be

$$R = \frac{\lambda}{4\pi}\left[\frac{P_T G_T G_R MP}{(S/N)\ BKTF}\right]^{\frac{1}{2}} = 8000 \text{ km } (4300 \text{ n mi})$$

where

λ = 15 cm (5.91 in.),

P_T = 10 w,

G_T = 0 db,

G_R [for a 24.4-m (80-ft) dish] = 51.9 db,

M = -9 db,

P = -3 db,

S/N = 13 db,

B = 5 MHz,

T (ground looking toward space) = 55°K,

K = 1.38×10^{-23}

F = 5 db.

The system described above is therefore useful for low and medium earth orbit. Although communication would be possible out to synchronous orbit, the margin would be exceeded and the signal-to-noise ratio would be severely degraded. Moreover, a simultaneous transmission of more than one picture would be impractical due to

the greater weight and power requirements of the 10-w transmitter; that is, it would no longer be feasible to have two or three transmitters aboard the FFTO, as it would be for short ranges.

To maintain the system's required capability at distances out to synchronous orbit, it will be necessary to employ a directional antenna array on the FFTO. A suitable space-qualified antenna is the 76-cm (30-in.) dish to be used in the Viking program, which has a gain at S-band of 22 db. The following calculation shows the transmitter power necessary to provide video communication from synchronous orbit to the ground.

$S/N = 13$ db

$B = 5$ MHz

$T = 55°K$

$\lambda = 15$ cm (5.91 in.)

$F = 5$ db

$M = -9$ db

$P = -3$ db

$G_T = 22$ db

$G_R = 51.9$ db

$R = 3.6 \times 10^9$ cm (19,300 n mi)

$K = 1.38 \times 10^{-23}$

$$P_T = \frac{(S/N)\ BKT\ (4\pi R/\lambda)^2\ F}{G_T G_R M P} = 1.4\ w$$

This power requirement is very much in line with the transmitters planned for the short-range FFTO/Shuttle missions. The primary disadvantages are, of course, the additional complexity in the electronics needed to control antenna pointing and the extra weight and power needed for the antenna and associated drive mechanisms. These tracking systems are, however, off-the-shelf items and would be easily adaptable for FFTO use.

A secondary disadvantage is that operation would either have to be restricted to the earth side of the target vehicle or an extendable antenna boom would have to be used to prevent occultation of the signals by the target vehicle. For the recommended system using the Viking lander S-band steering array, and with no extendable boom, the deltas are as follows: weight, +6.80 kg (+15 lb); average power, +20 w; envelope to include a 76-cm (30-in.) dish.

5. Telecommunication Video Link

The number of transmitters and their modulation bandwidth will depend on the maximum number of FFTO TV cameras required to function simultaneously. Each of the candidate concepts may require up to three cameras in operation at any given time. It is assumed each TV camera has an information bandwidth of 5 MHz and needs an equivalent RF bandwidth of at least that magnitude.

a. Synchronous Video Switching - Figure VII-29 shows a method by which signals from three cameras (or two in other configurations) may be time-multiplexed so that only a single 5-MHz bandwidth transmission channel is required. A synchronous, solid-state video switch is used to sample the video from each camera a field or frame at a time; i.e., the signal input to the transmitter may consist of one frame from camera 1, followed by one frame from camera 2, followed by one frame from camera 3, followed by a second frame from camera 1, etc. At the receiving end, the demodulated signal is separated in the opposite manner. Thus, after monitor 1 receives a frame from camera 1, there are two frame periods during which no signal appears at this monitor. In the meantime monitors two and three are receiving their respective frames.

The drawback to this system is obvious: if the normal frame rate is 30 frames per sec, each monitor will display one-third that number, or 10 frames per sec. Since the nominal flicker-fusion frequency of the human eye is between 20 and 24 frames per sec, a two-camera system with a flicker rate of 15 frames per sec would be marginal, and 10 frames per sec for the three-camera configuration would be very objectionable.

The flicker can be eliminated by using an image storage device, such as a storage tube or magnetic disc, that holds the previous picture until it is updated, but these devices are presently only in the developmental stages and no space-qualified versions yet exist. One of these devices would be needed for each monitor that is to be viewed simultaneously. In addition, motion rendition would suffer because the picture update rate would be inversely proportional to the number of cameras in the system.

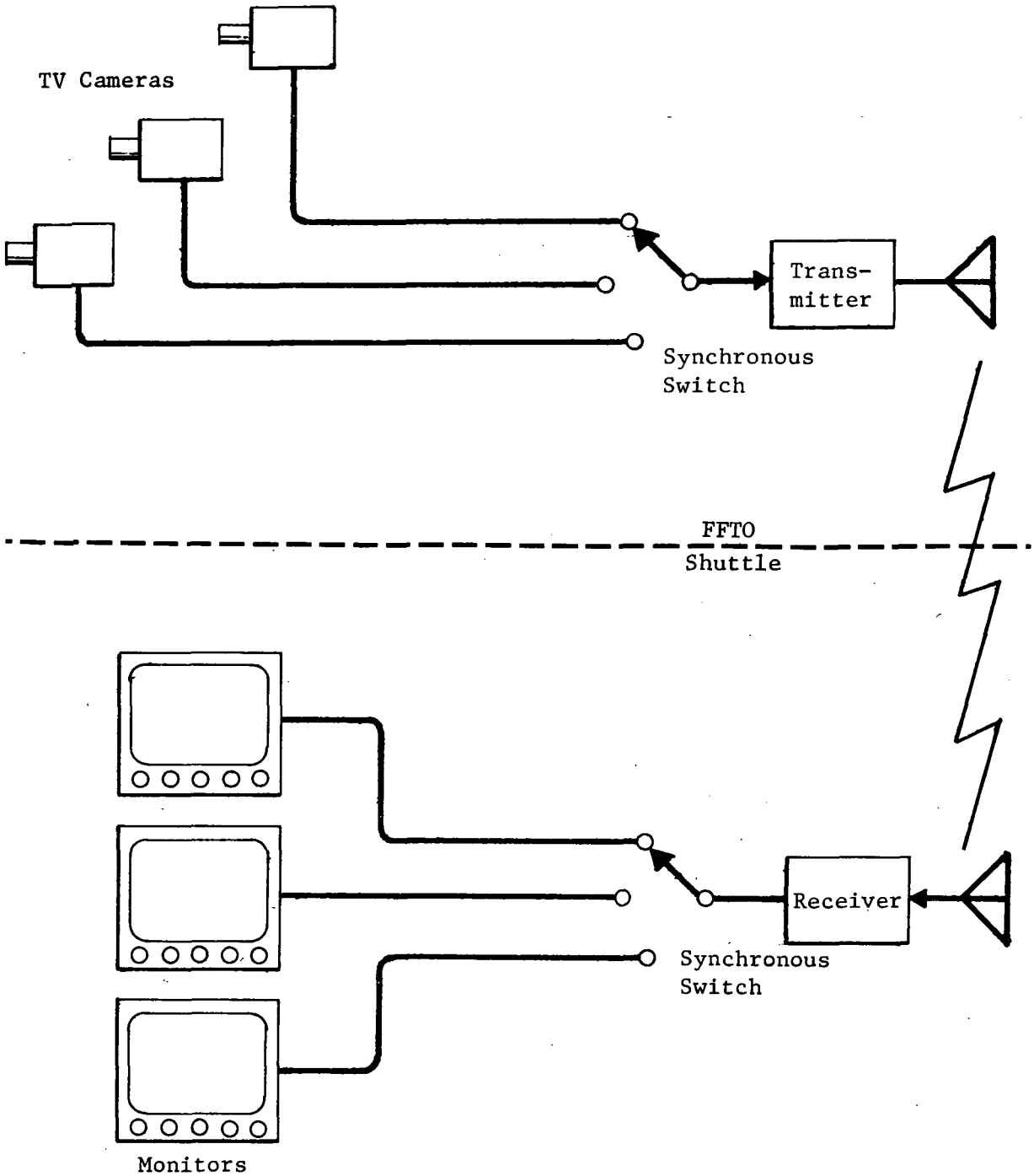

Fig. VII-29 Synchronous Video Switching

To simultaneously transmit multiple-camera video signals without a loss of information, the overall bandwidth must increase to include each wideband signal; i.e., increase to 10 MHz for two cameras or to 15 MHz for three. There are two common methods for handling these requirements: (1) the video signals may be frequency-modulated on separate subcarriers which, in turn, are frequency-modulated onto a common carrier and transmitted by a single, extra-wideband transmitter, or (2) each video signal may modulate a separate transmitter.

b. Extra-Wideband Single Video Link - Figure VII-30 depicts the first method. Its primary advantages over using separate transmitters for each channel are savings in power and weight. For equivalent receivers, the single 15-MHz channel must transmit three times the RF power of a 5-MHz channel for the same received signal-to-noise ratio. However, if three separate receivers are used in parallel for the 5-MHz signals, a power divider must then be used to route the signals to each receiver input.

A factor-of-three loss for the divider means that three times the received RF power is needed. Therefore, the total power needed for a single 15-MHz RF link is one-third the power required for three 5-MHz parallel links.

The circuitry is also more complex since subcarrier oscillators must be provided for frequency-division multiplexing (FDM). At the receiving end, the 15-MHz bandwidth places excessive demands on a single IF amplifier. To compensate for this, the receiver uses a separate IF amplifier for each video channel. The receiver must thus be a specially designed piece of equipment that is nearly as complex as using three separate receivers.

In addition, the reliability requirements are very high since there is no provision for redundancy. A single-point failure in any of the common circuitry could terminate the mission and even cause loss of the FFTO.

c. Separate-Channel Video Link - The most straightforward means of transmitting the video information is shown in Fig. VII-31, which again depicts the three-camera simultaneous-viewing configuration. In this setup each camera is associated with its own transmitter. The transmitter outputs are summed and routed to a common antenna for transission to the Shuttle. There the signals are separated by a power divider and sent to the individual receiver inputs, where they are amplified, converted, and detected in standard manmer. The video outputs then go to each monitor.

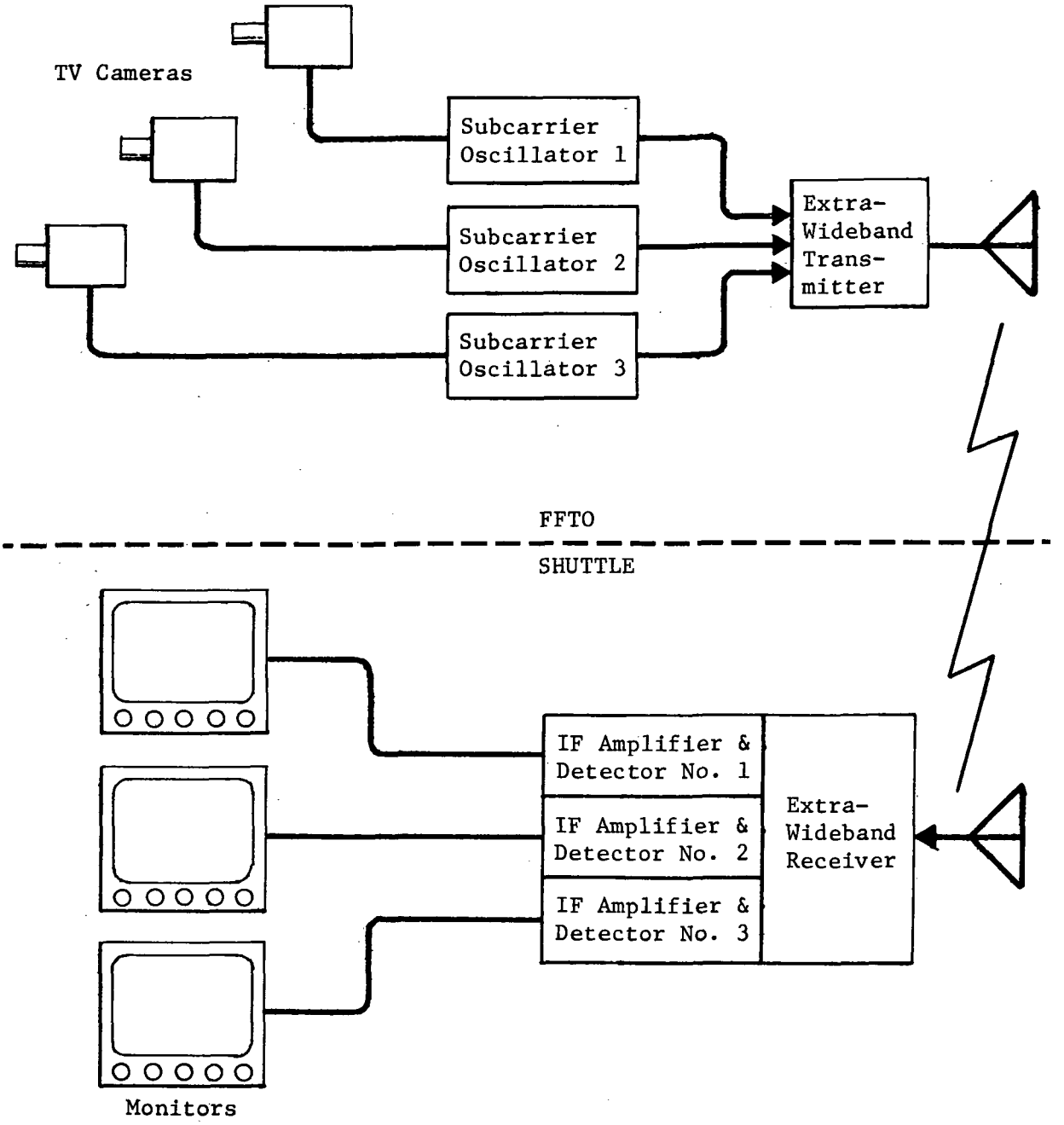

Fig. VII-30 Extra-Wideband Single Video Link

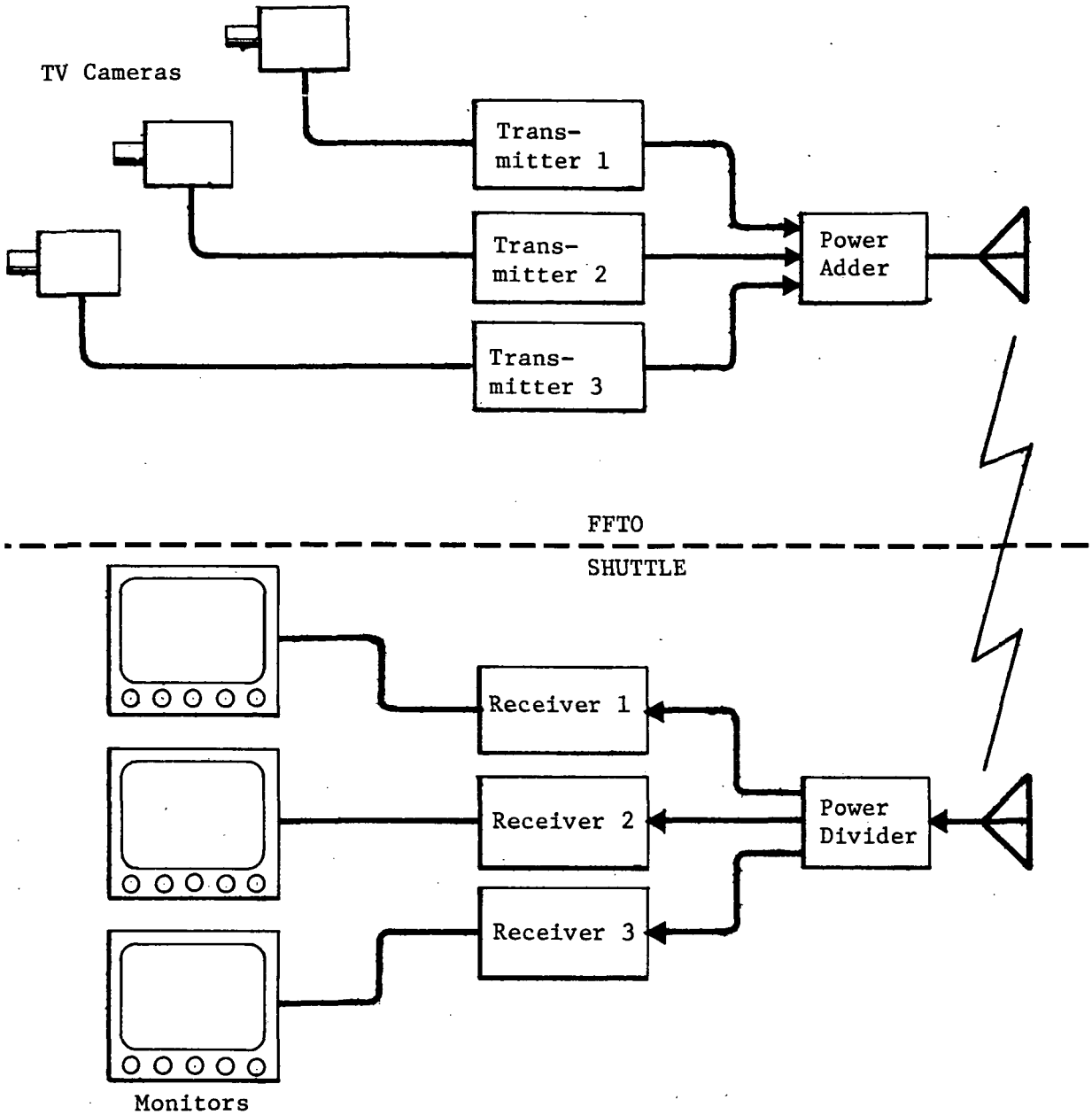

Fig. VII-31 Separate-Channel Video Link

This method has two outstanding advantages. The first advantage is simplicity. All the techniques and equipment are well developed and exist in "off-the-shelf" space-qualified hardware. The second advantage is redundancy. The three transmitters can provide some continuing telecommunications in the event of almost any single-point failure. Additional versatility in a contingency situation may be gained by including a remotely controlled switching circuit so that any camera may be associated with any transmitter.

Three camera/RF link configurations have been described for visual system telecommunications. The first, employing field or frame-rate video switching, is unsatisfactory for display complications. The second, which uses a single extra-wideband channel, is advantageous from a weight and power standpoint but is complicated and lacks redundancy. The third configuration has a separate link for each channel, but uses common antennas. This offers a straightforward, redundant system, but has a weight and power penalty. Since the required power and the corresponding weight are quite low to begin with and do not seriously affect the overall FFTO power and weight limitations, this third alternative is our recommended system.

6. Effect of Using Manipulator-Mounted Cameras

In considering video transmission from an arm-mounted camera on the FFTO to the Shuttle, one possible method is to use an RF link to eliminate the signal cabling between the camera and the telecommunications electronics in the body of the FFTO. Such an RF link can be configured in two ways, as shown in Fig. VII-32.

a. End Effector-to-FFTO RF Link - In the first approach, a low-power (10-mw) transmitter is used to transmit the video to the FFTO telecommunications. The received video is demodulated and then handled in the same manner as the video from other onboard cameras.

Martin Marietta expended considerable effort on a very similar problem in the Shuttle-attached manipulator system during Contract NAS9-11932, *Preliminary Design of a Shuttle Docking and Cargo Handling System*. This study investigated the RF transmission of not only camera video, but also the command and data signals for the arm joints and the end effector with the intent of reducing the multiplicity of cabling around the arm joints and minimizing the attendant flexure problems.

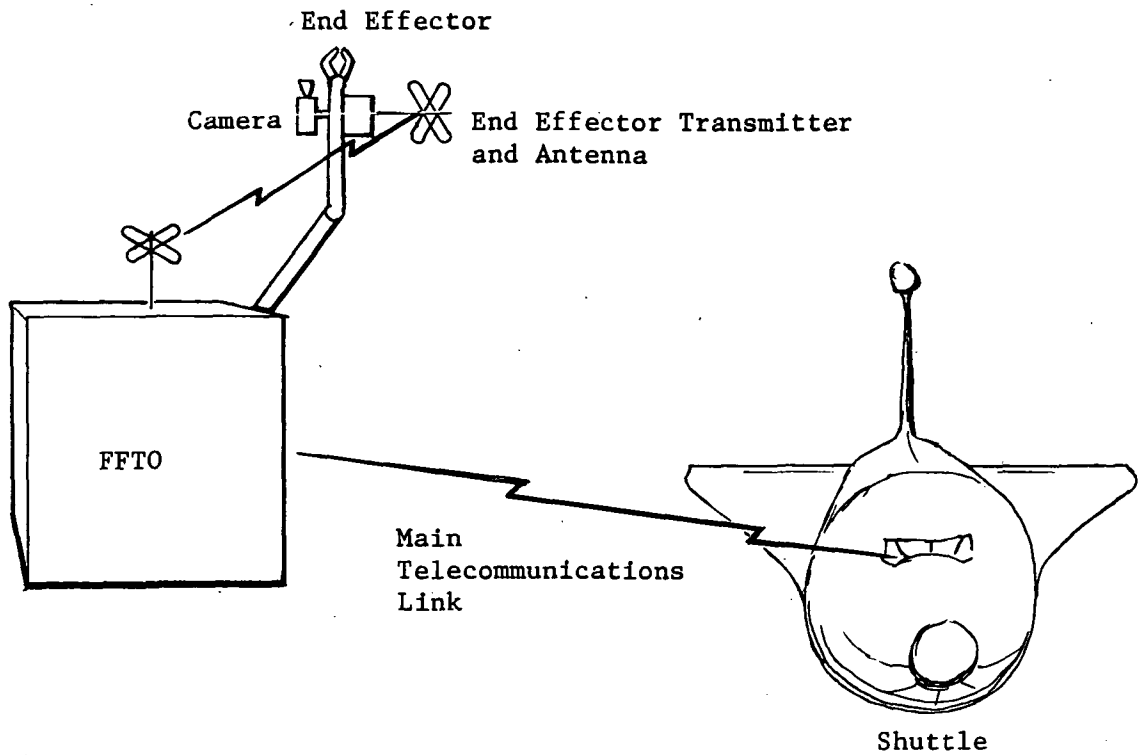

a) End Effector-to-FFTO RF Link

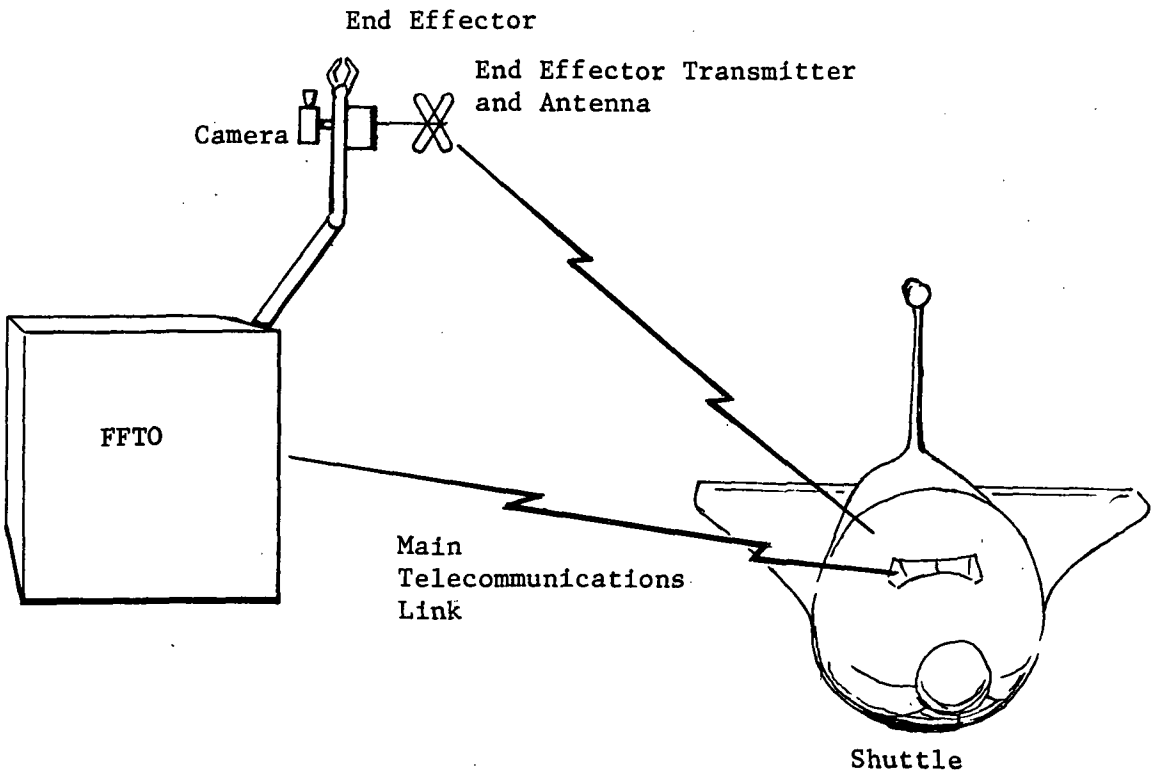

b) End Effector-to-Shuttle RF Link

Fig. VII-32 Arm-Mounted Camera RF Link Configuration

In the present case, the conclusion favoring hardwired signals is even more valid since the consideration only includes the wide-band video RF transmission link. Other requirements are as follows. First, the RF link will require a transmitter and antenna mounted at the end of the arm, or at least on the end-effector side of the elbow joint. Second, in order to avoid extreme complexity, the antenna must have a wide beamwidth to eliminate pointing requirements; but the wider the beamwidth, the more susceptible is the system to multipath reflections. Next, the manipulator must be able to withstand greater loads due to the higher inertia near the tip of the arm. Fourth, a receiving antenna must be provided on the body of the FFTO, and this antenna must have a beamwidth sufficient to cover the entire working area of the manipulator arm. Finally, a receiver will have to be provided to recover the video to be handled by the telecommunications system for retransmission to the Shuttle.

It is clear from the preceding discussion that there is no advantage in using an RF system to transfer information around the arm joints. Some type of cabling must be provided in any event to provide power (since battery weight at the end of the arm is prohibitive), and adding a single cable to handle camera video is a far better alternative than adding the complexity of an RF transmission system.

b. End Effector-to-Shuttle RF Link - The second configuration in Fig. VII-32 shows an RF link directly from the end-effector TV camera to the Shuttle. This approach is valid from the standpoint that it is not necessary to add additional equipment except for a transmitting antenna. In addition, the multiplexing in the main FFTO antenna equipment is slightly simplified by eliminating one channel.

The weight of the additional antenna at the end of the manipulator arm and the problem that the antenna might obscure the view of the end effector by the other cameras are negative factors. The most serious disadvantage is that an antenna located on the manipulator is very easily obscured by the target vehicle on one side and the FFTO itself on the opposite side. There is no practical method of eliminating such occultations.

The above discussion clearly shows that the preferred mode for processing the video from a camera at the end of a manipulator arm is to provide a hardline connection between the camera and the primary telecommunication electronics. Thus, the video can be handled in the same manner as the video from other onboard TV cameras, and the system is simple, yet versatile.

7. Four-Camera Visual System Telecommunications Concept

Figure VII-33 is a block diagram for a visual system concept that uses four TV cameras--one stereo pair and two separate cameras for alternate viewing. This configuration embodies the "any-camera, any-transmitter" philosophy.

After a command signal is transmitted from the control station to the FFTO, the signal is routed by the diplexer to the command receiver, where it is amplified and the command subcarrier is demodulated. The commands are separated in the command decoder and sent to the appropriate visual system components, as well as to the other subsystems.

Each of the four cameras can be turned on and off by commands from the control station. Other commands control the lens zoom, focus, and iris, the automatic light control (ALC), and camera-mount positioning, including variable baseline positioning for the stereo pair.

Video from each camera is routed to the video switching network. In response to commands from the Shuttle control station, video from three of the four cameras can be combined with a data subcarrier if desired and used to modulate the video transmitters.

Status data from the transmitters (an on-off indication for RF output power) and an indication of camera functions are input to the data encoder for relay to the operator. Required data from other subsystems are also sent to the data encoder. The encoded PCM data can either be used to modulate a low-power data transmitter in the normal mode or be placed on a subcarrier and added to the camera video in the contingency mode. The transmitter outputs are added in the power summer and routed to the antenna through the diplexer.

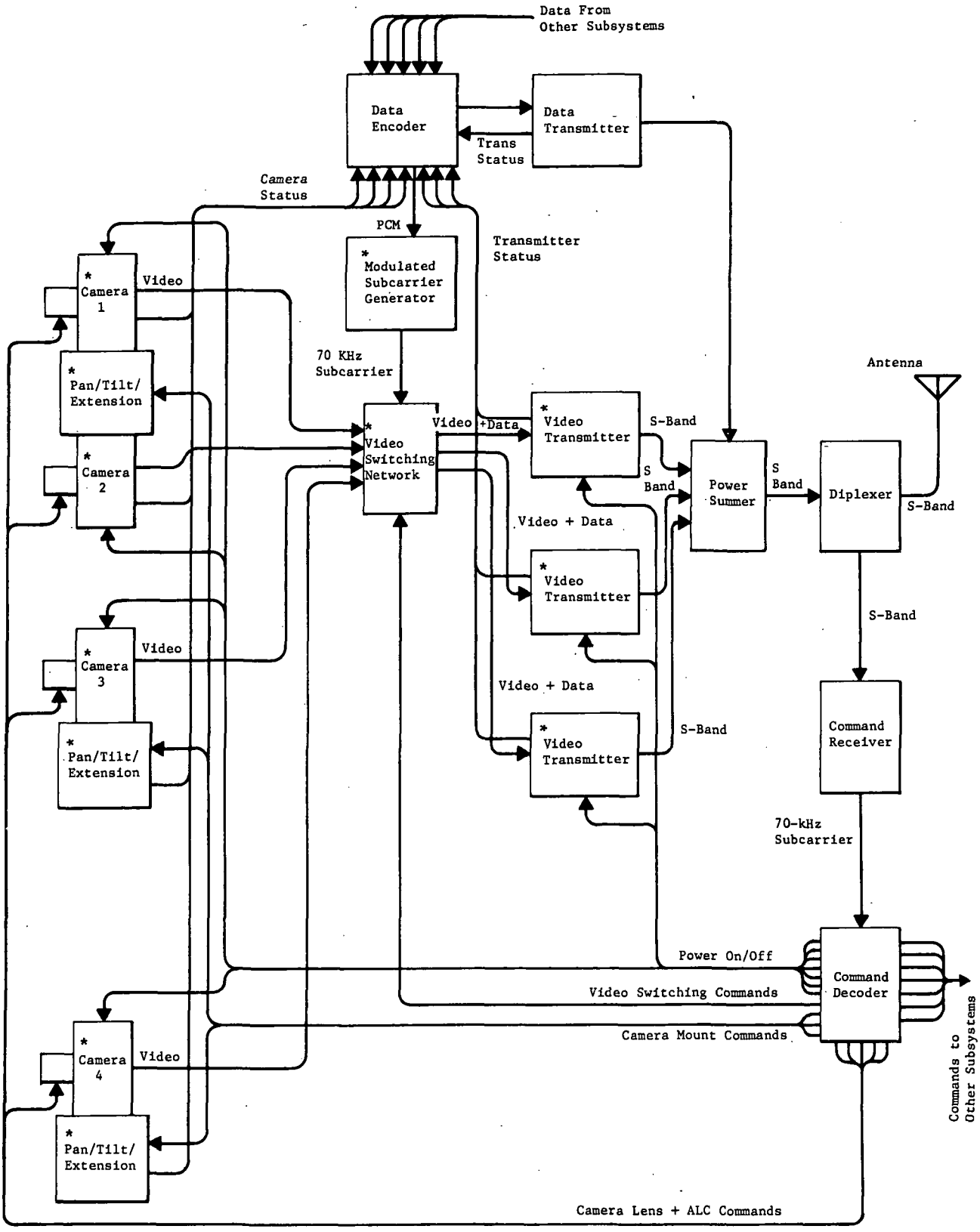

*Visual System Responsibility

Fig. VII-33 Four-Camera Visual System Telecommunications Block Diagram

The block diagram shown here represents the most complex configuration to be investigated. The variations occur in the number of TV cameras and video transmitters employed. These components are essentially in parallel and can be removed to alter the configuration without changing the overall signal flow. Of course, with fewer cameras or fewer video transmitters, the video switching network becomes less complex.

8. Summary

Table VII-7 summarizes the characteristics of the telecommunications subsystem and shows the differences between the monocular and stereoscopic concepts.

Table VII-7 Monocular and Stereoscopic Concept Summary

Parameter	Monoscopic	Stereoscopic
Bandwidth	5 MHz	10 MHz
No. of Video Transmitters	1	2
RF Output Power	1.5 w	3.0 w
dc Input Power	15 w	30 w
Frequency	2100 MHz	2100 MHz
Antenna	Omnidirectional; Circularly Polarized	Omnidirectional; Circularly Polarized

G. SUMMARY OF SUBSYSTEM REQUIREMENTS

In the preceding sections it was shown that two basic systems emerge as possible candidates. The two candidates are monoscopic TV and stereoscopic-fresnel TV. These two systems and their subsystem characteristics are shown in Table VII-8.

Table VII-8 pertains only to a monoscopic TV system with one camera and one monitor, and to a stereoscopic TV with one sensor package (two cameras) and one stereoscopic display. The total visual system may include one or more monoscopic TV systems or a combination of stereoscopic and monoscopic systems.

The determination of the total visual system concept is subject to detailed simulations, and the results of these simulations will be used to recommend candidate visual systems that contain some combination of the two video systems (monoscopic and/or stereoscopic-fresnel).

Table VII-8 Typical Video System Characteristics

Subsystem Parameter	Monoscopic	Stereoscopic-Fresnel
Sensor		
Bandwidth	5 MHz	10 MHz
Power	12 w	24 w
Weight	2.8 kg (6.2 lb)	5.6 kg (12.4 lb)
Size	2600 cm^3 (158.6 $in.^3$)	5200 cm^3 (317.2 $in.^3$)
Illumination		
Maximum Working Distance	6.1 m (20 ft)	6.1 m (20 ft)
Brightness	40 ft-lamberts (137 Cd/m^2)	40 ft-lamberts (137 Cd/m^2)
Power	62 w	62 w
Display		
Monitor Size	30 cm (12 in.)	7.6 cm (3 in.)
Power	60 w	1.6 w
Weight	11.3 kg (25 lb)	9.1 kg (20 lb) (estimated)
Size	27 x 10^3 cm^3 (1648 $in.^3$)	28 x 10^3 cm^3 (estimated) (1709 $in.^3$)
Telecommunications		
Bandwidth	5 MHz	10 MHz
Transmitted Power	2 w	4 w
Carrier Frequency	2100 MHz	2100 MHz
Antenna	Omnidirectional, 90-deg (1.571-rad) Sector	Omnidirectional, 90-deg (1.571-rad) Sector
Articulation	Concept-Dependent	Concept-Dependent

VIII. CONCEPT EVALUATION

A. SIMULATION SUMMARY

Following the systems requirements definition and the development of several stereo system techniques, we derived a simulation plan for systems evaluation simulations and constructed a stereo TV system, along with various mockups, controls, and displays. Four separate simulations were conducted and the results of these simulations were analyzed. The work presented in this section was performed under Independent Research and Development (IRAD) Task No. 48664.

The simulation plan is summarized in Table VIII-1 and the simulation results are summarized in Table VIII-2. The next section describes the visual system used in the simulations. The remainder of the chapter gives a brief summary of each simulation experiment with discussions of results and conclusions.

B. VISUAL SYSTEM APPARATUS

The visual system apparatus was similar for both the monoscopic and stereoscopic task simulations. In each case a Norelco LDH-0050 camera (or pair of cameras) with a 20-mm lens was used for the sensor. The stereoscopic sensor cameras were held at a convergence angle of 11 deg (0.192 rad) and a baseline reference of 12.7 cm (5 in.) for all simulations. Two Audiotronics MMA-10 monitors were used in the monoscopic TV display. These were capable of a measured resolution of 350 lines on the 25.4-cm (10-in.) monitor face, and were viewed directly. The stereoscopic display consisted of two Audiotronics MGM-931 mini-monitors, capable of a resolution of only 300 lines, projected onto a 25.4-cm (10-in.) fresnel display lens. The difference in resolution between the monoscopic and stereoscopic displays was approximatley 17%. A design drawing of the stereoscopic display is shown in Fig. VIII-1.

Table VIII-1 Teleoperator Visual System Simulation Plan

STATIC SIMULATION	DYNAMIC SIMULATION	
	CRL MASTER/SLAVE	SIX-DOF MOVING BASE
<u>Purpose</u>: Evaluate camera location and mono vs stereo for depth alignment of various geometrically shaped objects with no background cues	<u>Purpose</u>: Evaluate camera location(s), lighting location, and mono vs stereo for typical FFTO remote manipulator tasks	<u>Purpose</u>: Evaluate stereo vs mono and visual alignment cues for capture of various spinning and nutating satellites. Evaluate visual cues and stereo vs mono for maneuvering/inspection tasks
<u>Hardware</u>: . Stereo TV system . Mono TV system . 2 cylindrical, equal-size blocks . 2 rectangular, equal-size blocks . 2 rectangular, unequal-size blocks . One-DOF alignment stand	<u>Hardware</u>: . Stereo TV system . 2 mono TV systems . Lighting system . Task panel . CRL master/slave arm	<u>Hardware</u>: . Six-DOF moving base . Spinning and nutating target satellite . Stereo TV system . Mono TV system . Large mockup for an inspection maneuver

Table VIII-2 Teleoperator Visual System Simulation Results

TASK SIMULATED	MONO VS STEREO	CAMERA LOCATION	LIGHTING	RETICLES
Basic Depth Alignment	Stereo is better for depth alignment of two objects (side by side), especially for unequal-size objects as viewed 30-deg (0.524-rad) left of LOM.*	Location makes a large difference for mono, but very little difference for stereo. A 30-deg (0.524-rad) elevation was best, a LOM was still good, and a 30-deg (0.524-rad) left location was worst for depth alignment of two side-by-side objects.	Not evaluated.	Not evaluated.
Remote Manipulation	Stereo is better than mono and is much better for off-axis camera position. Stereo is also better than two mono views for task time.	Depending on the lighting, a LOM location was better, and a 45-deg (0.785-rad) right location was about as good for stereo. Mono viewing required that the camera be perpendicular to alignment axis.	Only one light was evaluated. This was best if mounted on or near the camera. However, glare and shadows were a severe problem for some camera locations.	Not evaluated.
Inspection	Stereo is better than mono for close-in maneuvering.	The camera was located on the control axis for FF control in the axes of the camera. (Other camera locations were not evaluated).	The light must be at an angle to the camera LOS† to avoid reflective glare, but nearly parallel to the camera LOS to avoid shadows.	Not evaluated.
Capture	Stereo is not required if adequate reticles are available.	Locate the camera parallel to the control axis.	The light must be at an angle to the camera LOS to to avoid reflective glare.	Reticles are very important. Those used with the stereo system could also be used for optical ranging.

* LOM - Line-of-Motion.

† LOS - Line-of-sight.

The FOV of the monoscopic system with a 20-mm lens, is 27 deg (0.471 rad) in the horizontal plane and 20 deg (0.349 rad) in the vertical plane. The FOV of the stereo system is part stereo and part mono. The stereo horizontal FOV goes from 27 deg (0.471 rad) (the FOV of the camera-lens) in close, to 16 deg (0.279 rad) (the FOV of the camera-lens minus the convergence angle) at infinity. The total (stereo and monoscopic) horizontal FOV is equal to 27 deg (0.471 rad) (the FOV of the camera-lens) in close, and is equal to 38 deg (0.663 rad) (the FOV of the camera-lens plus the convergence angle) at infinity. The stereo vertical FOV is constant for all ranges and is equal to 20 deg (0.349 rad).

C. SIMULATION OF VISUAL SYSTEMS FOR BASIC DEPTH ALIGNMENT

Basic information was required on visual systems for various remote viewing tasks. The variables of interest were monocular vs stereo viewing, the position of the camera, and the shapes and sizes of objects. The remote viewing task was to align two objects in a plane.

1. Apparatus

The experimental hardware consisted of a stand with only one horizontal degree of freedom, a stationary stand, two cameras with 10-mm lenses, a stereo fresnel display monitor, a monocular TV monitor, and three types of blocks:

1) Two rectangular blocks 12.7 cm (5 in.) high by 5.08 cm (2 in.) wide by 5.08 cm (2 in.) deep.

2) Two cylindrical blocks 12.7 cm (5 in.) high by 5.08 cm (2 in.) in diameter.

3) One rectangular block 10.16 cm (4 in.) high by 3.81 cm (1.5 in.) wide by 3.81 cm (1.5 in.) deep.

These blocks were painted a flat white and were used against a black background.

2. Method

The task of the experiment was to align two objects in the same horizontal (X-Y) plane. One object was fixed in place and the other could be moved along a horizontal line (X). The objects were maintained 5.08 cm (2 in.) apart in Y. The movable object was either started from 10.2 to 25.4 cm (4 to 10 in.) in front of or behind the fixed object. The exact starting distance was random. Once the movable object was started towards the fixed object, it was stopped on command when the subject perceived that the two objects were aligned in a vertical plane normal to the

line of motion (LOM). The alignment error was recorded by the experimenter. The subject was then asked to command corrections until he felt that the position was as good as he could get it. Time and error were recorded for this second phase.

The independent variables were: (1) shape of object (either cylindrical or rectangular); (2) size of objects (either equal or unequal); (3) direction of motion of movable object either toward or away from the camera); (4) dimension of view (either mono or stereo); and (5) camera location (optical axis boresighted along the LOM; optical axis 30 deg (0.524 rad) above the LOM; or optical axis 30 deg (0.524 rad) to the left of the LOM. The dependent variables were the initial alignment accuracy, the final alignment accuracy, and the time differential between the two.

The experimental order of the independent variables were counterbalanced across six different subjects. Each subject was given an eye examination. The results of this examination are given in Table VIII-3.

Table VIII-3 Subjects' Eye Examination Results

Visual Parameter		Subject 1 FG	Subject 2 MS	Subject 3 DR	Subject 4 RB	Subject 5 DJ	Subject 6 JC
Near Acuity Uncorrected							
	R	20/29	20/50	20/18	20/17	20/22	20/18
	L	20/29	20/50	20/17	20/20	20/20	20/25
	Both	NA	NA	20/17	20/17	20/20	20/17
Near Acuity Corrected					*		
	R	20/20	20/22	NA	NA	NA	NA
	L	20/22	20/18	NA	NA	NA	NA
	Both	20/20	20/17	NA	NA	NA	NA
Far Acuity Uncorrected							
	R	20/33	20/200	20/18	20/22	20/18	20/20
	L	20/40	20/200	20/18	20/25	20/25	20/17
	Both	NA	NA	20/17	20/20	20/18	20/17
Far Acuity Corrected					*		
	R	20/22	20/22	NA	NA	NA	NA
	L	20/22	20/20	NA	NA	NA	NA
	Both	20/20	20/18	NA	NA	NA	NA
Color Vision		OK	OK	OK	OK	OK	OK
Depth Perception		78%	100%	100%	65%	100%	33%
Near Phoria							
	Vertical	5 OK	4 OK	OK	4 OK	5 OK	4 OK
	Lateral	8 OK	4 †	OK	4 †	6 OK	8 OK
Far Phoria							
	Vertical	4 OK	5 OK	OK	5 OK	5 OK	5 OK
	Lateral	8 OK	8 OK	OK	7 OK	9 OK	8 OK

† Not quite normal.
* Normally wears glasses.

3. Results

Table VIII-4 summarizes the errors recorded during the simulation.

Table VIII-4 Mean Errors in Basic Depth Alignment Simulation

Objects	Visual System	Camera Location		
		LOM	30 deg (0.5 rad) Up	30 deg (0.5 rad) Left
Equal Size Cylinders	Monoscopic	1.55 cm (0.611 in.)	1.59 cm (0.625 in.)	3.13 cm (1.25 in.)
	Stereoscopic	0.867 cm (0.341 in.)	0.917 cm (0.361 in.)	1.83 cm (0.721 in.)
Equal Size Rectangles	Monscopic	1.82 cm (0.716 in.)	0.85 cm (0.333 in.)	3.40 cm (1.34 in.)
	Stereoscopic	0.97 cm (0.382 in.)	0.85 cm (0.333 in.)	1.61 cm (0.632 in.)
Unequal Size Rectangles	Monscopic	6.40 cm (2.52 in.)	Not Evaluated	Not Evaluated
	Stereoscopic	1.40 cm (0.55 in.)	Not Evaluated	Not Evaluated

These results are plotted in Fig. VIII-2 thru VIII-4. The correlation between the stereo acuity found in the eye examination and the stereo performance obtained in the simulation was 0.55, but this is not significant at a 90% confidence level.

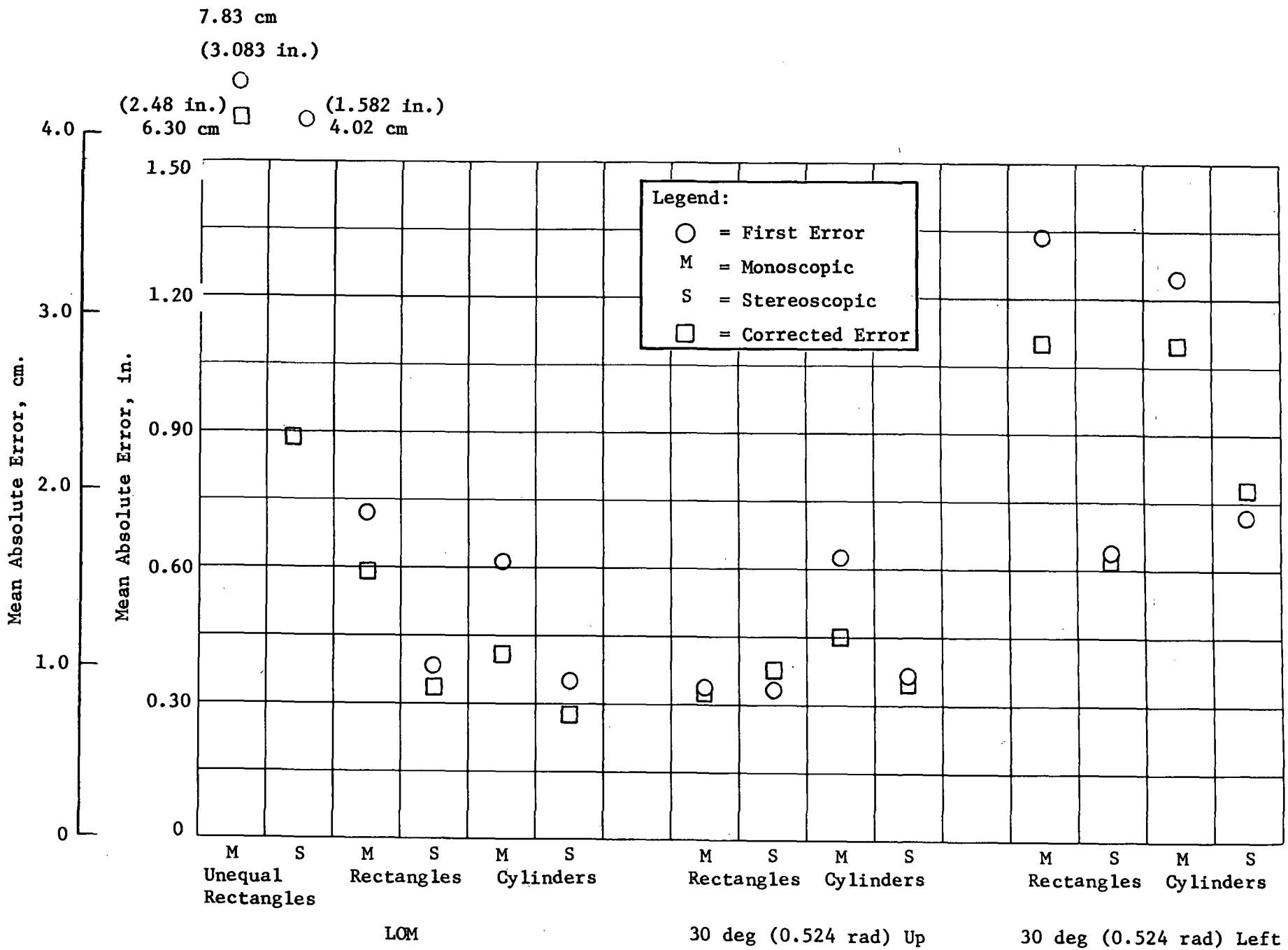

Fig. VIII-2 Mean Absolute Alignment Error across Subjects

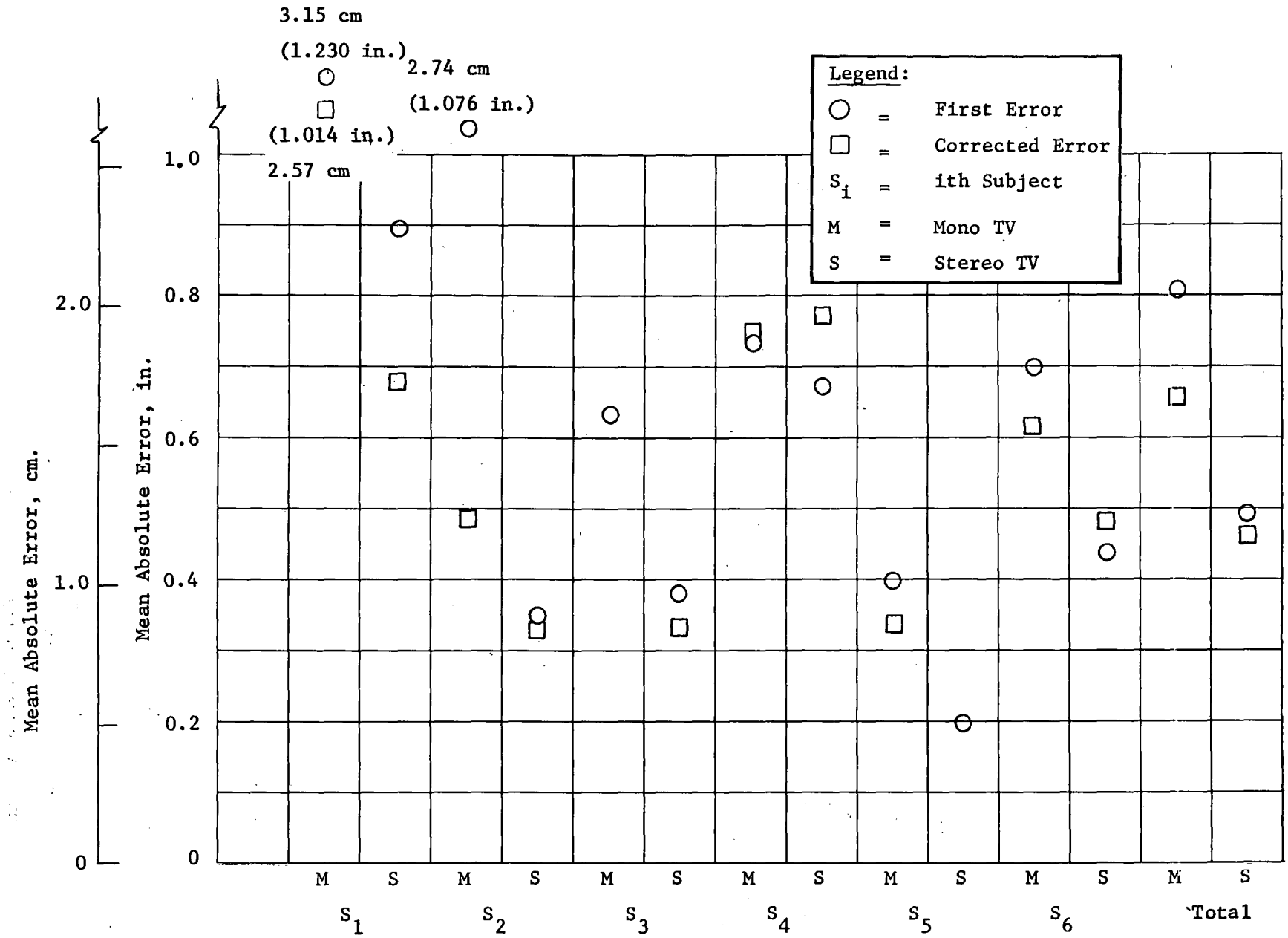

Fig. VIII-3 Mean Absolute Alignment Error across Camera Position and Objects

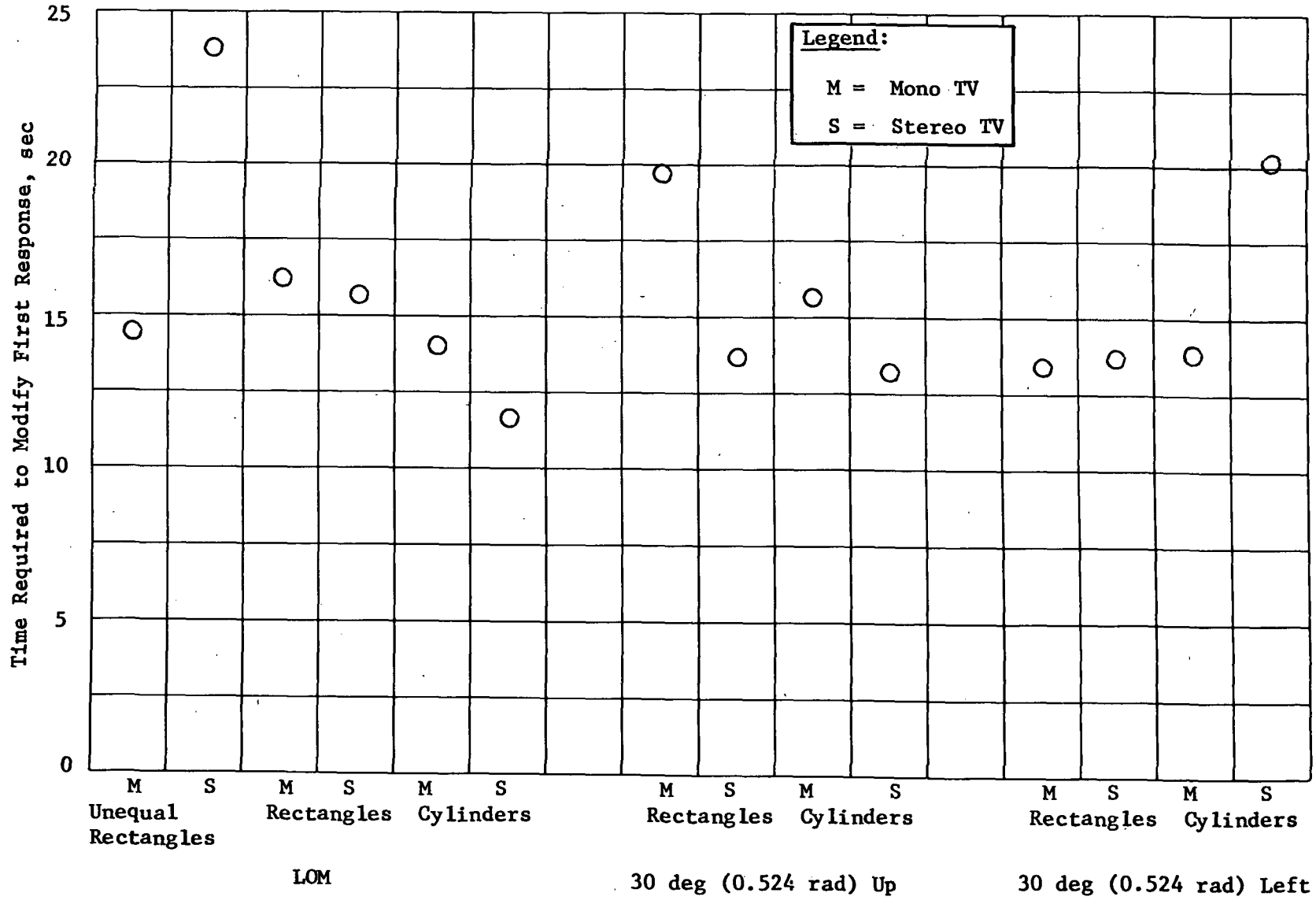

Fig. VIII-4 Mean Time Required to Modify First Response across Subjects

a. Mono vs Stereo - Stereo viewing proved to be consistently better throughout these tests. This was expected because the task was a depth alignment test.

On an overall basis, the mean error for stereo viewing was 1.19 cm (0.469 in.) and that for monoscopic viewing was 1.67 cm (0.658 in.). However, a "t" test comparing these means is not significant at a 90% confidence level.

b. Viewing Angles - With stereo viewing for equal-size objects, there was very little difference between alignment accuracy for line-of-motion and 30-deg (0.524-rad) up; however, 30-deg (0.524-rad) left viewing was somewhat poorer. There was greater difference in using different viewing angles with mono than stereo. Monocular viewing proved to be best at an angle of 30 deg (0.524 rad) up and worst at 30 deg (0.524 rad) left. This was as expected because the only cues in monocular viewing are size at the LOM camera position, both size and vertical position at 30 deg (0.524 rad) up, and only horizontal position at 30 deg (0.524 rad) left.

c. Object, Shape, and Size - There was very little difference in accuracy for viewing rectangles and cylinders. However, the subjects felt that rectangles were easier to align because of their predominate edge cues.

When using unequal-size rectangles, where size cues could not be used as the primary cues, stereo viewing proved significantly better: stereo errors were less than half the monocular errors. For stereo viewing, aligning equal rectangles was four times as accurate as for unequal rectangles. Moreover, the experimental method (counterbalancing the order of mono and stereo and the direction of travel and having the smaller block stationary) gave additional cues, otherwise there would have been a greater difference between using unequal and equal objects and between monoscopic and steroscopic viewing.

When using monocular TV and unequal-size objects, the test subjects commented that they could only guess as to where alignment occured, and they had no feel for alignment. The alignment errors with monocular TV covered the total possible range, whereas stereo viewing of unequal-size objects produced only a slight decrease in mean accuracy and a similar increase in the variation.

d. Time - The data shown in Fig. VIII-4 indicate several apparent inconsistencies. However, one could account for these by hypothesizing that, alignment was faster in stereo for the easier tasks, and that since stereo viewing gave more information on the more difficult tasks, it took more time to use this additional information.

e. Correction Accuracy - There appears to be about a 12% increase in accuracy between the initial alignment error and the corrected alignment error for mono and about a 5% increase for stereo.

4. Conclusions

Stereoscopic TV permits adequate alignment for different-size objects from any of the three viewing angles, but 30-deg (0.524-rad) up viewing produces the best results. The LOM method for monoscopic TV is adequate only for equal-size objects. Viewing is better at 30 deg (0.524 rad) up. The simulation used blocks which were side by side however, for objects atop one another, 30 deg (0.524) to the side might be better. But for objects that touch or circumscribe each other like a peg in a hole, there might be no difference between viewing at 30 deg (0.524 rad up or 30 deg (0.524 rad) to the side.

D. SIMULATION OF A REMOTE MANIPULATION TASK

The results of the basic simulation indicate the potential benefits of using stereoscopic TV and the proper viewing angle. However, several questions still remained unanswered. Is stereo viewing as good as having a second view? Does lighting affect performance? Can you generalize the results of simple alignment in one DOF to a six- or seven-DOF manipulative task? The following pages consider these questions and give some general guidelines for the visual system.

This second simulation was conducted to evaluate two manipulative tasks representative of the FFTO tasks. The dependent variables were task time and operator preference; the independent variables were the viewing dimension (3D or 2D), camera locations, number of views, and lighting levels. The major objectives were to determine if stereoscopic viewing was as good as two monocular views and to determine the effects of camera location and lighting on the visual system and task performance.

The basis for our simulation was an FFTO defined as follows:

1) It was attached to, or otherwise fixed relative to, the task panel of a satellite;

2) It had a six-or-more-degree-of-freedom arm whose principal line of motion aligned within 45 deg (0.785 rad) of normal to the task panel.

3) Only one light was available for performing the task (this allowed an evaluation of each lighting position independent of other lighting);

4) The FFTO was not maneuvered during the task.

1. Apparatus

The manipulator arm used in the simulation analysis was a Central Research Laboratories (CRL) Model L arm with a general-purpose, alligator jaw-type end-effector. This arm is a master/slave, bilateral mechanical manipulator with a reach of about 1.5 m (5 ft). A screen was used between the master and slave so that the operator could use only the video system to perform the task.

A task panel was made from aluminum and oak and mounted on a plywood panel as shown in Fig. VIII-5. Two tasks were used for this evaluation. One was inserting an oak block 1.9 cm (0.75 in.) by 4.4 cm (1.75 in.) by 23 cm (9 in.) into each of three holes that were 0.16 cm (1/16 in.) larger than the blocks and oriented 0 deg (0 rad), 45 deg (0.785 rad), and 90 deg (1.571 rad) off the horizontal. The other task was inserting a 10-cm (4-in.) by 18-cm (7-in.) by 18-cm (7- in.) metal drawer into each of three metal guides that were 0.5 cm (3/16 in.) larger than the drawer and oriented 0 deg (0 rad), 45 deg (0.785 rad), and 90 deg (1.571 rad) to the horizontal.

The visual systems used were the fresnel stereoscopic system and the monoscopic system described in the previous section. The stereo display was rack-mounted above the two 25.4-cm (10-in.) monitors used for the monocular display (Fig. VIII-6). The secondary view for two-view stereo setups was displayed on the monitor directly under the stereo display, and the second monitor was turned off.

Four experienced CRL arm operators were used as subjects. These operators normally use the CRL arms in Martin Marietta's Environmental Effects Lab from 3 to 8 hrs each day. Eye examination results for these subjects are given in Table VIII-5.

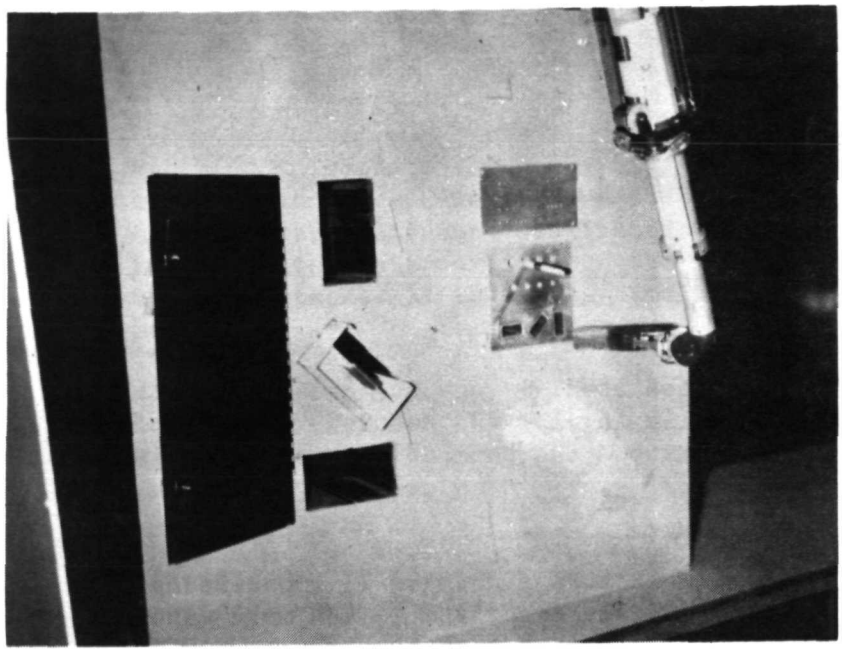

Fig. VIII-5 Task Panel

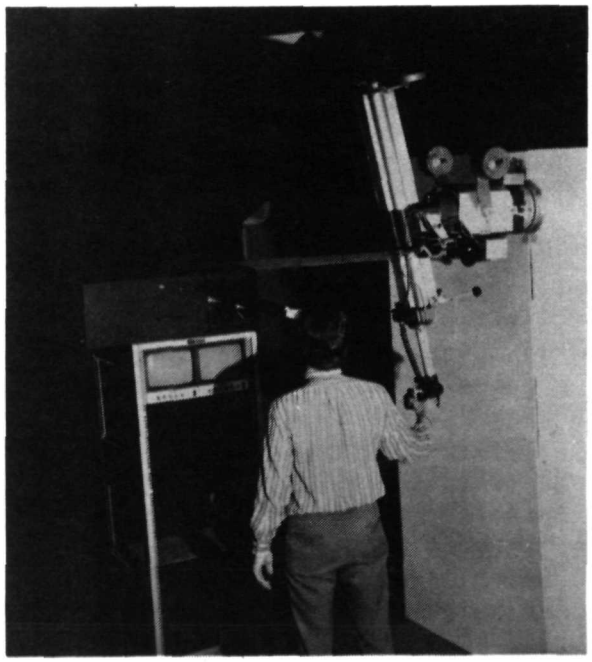

a) *Straightaway Viewing*

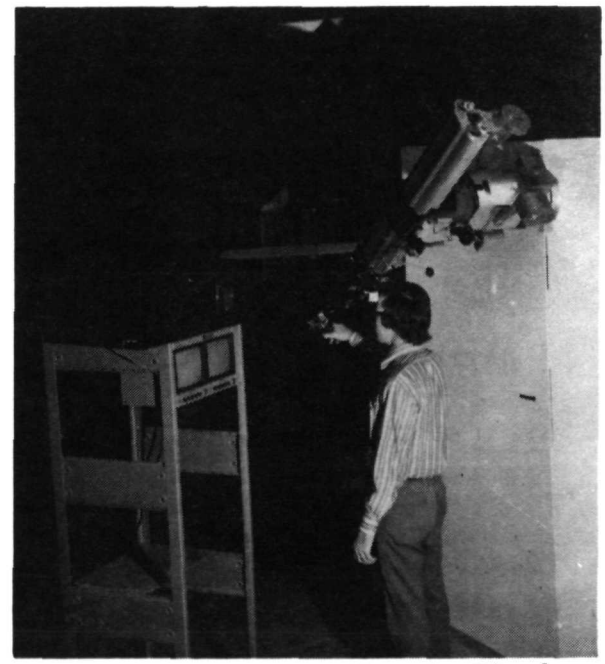

b) *45 deg (0.785-rad) Left Viewing*

Fig. VIII-6 Visual Display Setup for Manipulator Studies

ble VIII-5 Operators' Eye Examination Results

isual Parameter		Operator 1 CF	Operator 2 WV	Operator 3 OA	Operator 4 GM
ear Acuity Uncorrected					
	R	20/22	20/18	20/29	20/22
	L	20/22	20/20	20/33	20/100
	Both	20/22	20/17	20/22	20/20
ear Acuity Corrected					
	R	20/20	NA	20/25	20/18
	L	20/22	NA	20/17	20/100
	Both	20/20	NA	20/17	20/17
ar Acuity Uncorrected					
	R	20/69	20/22	20/40	20/22
	L	20/69	20/20	20/200	20/100
	Both	20/69	20/18	20/33	20/20
ar Acuity Corrected					
	R	20/20	NA	20/22	NA
	L	20/20	NA	20/20	NA
	Both	20/20	NA	20/18	NA
olor Vision	OK	OK	OK	OK	OK
epth Percep- tion		75%	95%	100%	50%
Near Phoria					
	Vertical	*	OK	5 (OK)	5 (OK)
	Lateral	*	OK	0 (NOT OK)	6 (OK)
Far Phoria					
	Vertical	*	OK	6 (OK)	5 (OK)
	Lateral	*	OK	8 (OK)	9 (OK)

* Not quite normal.

2. Method

Several pilot studies were conducted while training the operators so as to minimize learning affects and establish optimum camera, task panel, and lighting locations for the different setups. The setups resulting from these studies are shown in Fig. VIII-7 and summarized in Table VIII-6. The first five methods were one view methods and the last twelve were two view methods.

Note that when the primary view camera was straight away, the monitor was straight away (Fig. VIII-6a), and that when the primary camera was 45 deg (0.785 rad) to the right, the monitor was located 45 deg (0.785 rad) to the left (Fig. VIII-6b). This was necessary to keep the control axes aligned with the monitor axes. However, when the primary camera was located 35 deg (0.611 rad) up, the monitor was straight away and the operator was required to make a mental transformation in the X-Z plane. (The Y axis remains parallel to the horizontal axis of the monitor).

Whenever possible the light was located on or near the primary view camera. The reasons for this are discussed in the next subsection.

Because of the amount of learning anticipated in performing our task, the order was counterbalanced for learning (i.e., mono was presented first half of the time and stereo was presented first the other half). In general, each subject was used to evaluate each test setup.

The task was begun by grasping the block in the hole on the right, at which time the stop watch was started. The operator removed the block and inserted it, first into the left hole, then into the middle hole, and finally into the right hole, leaving it in the right hole. The operator then grasped the drawer in the top guide, removed it, and successively placed it into the bottom, middle, and finally back into the top guide. The total time required to perform the task was recorded. (The individual times required to perform each element of the task were also recorded, but only the total time was used to analyze the data).

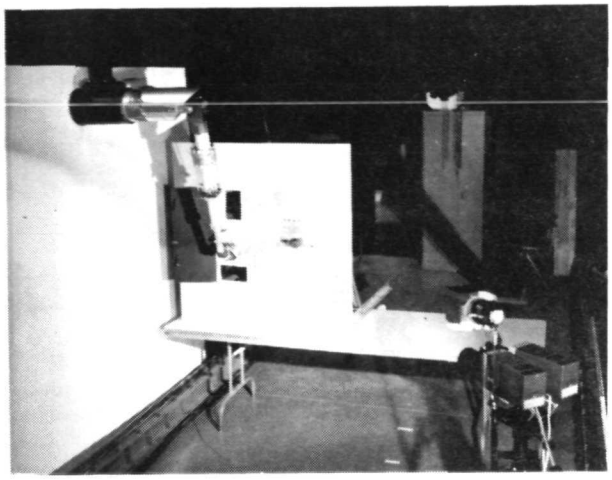

a) 45 Right

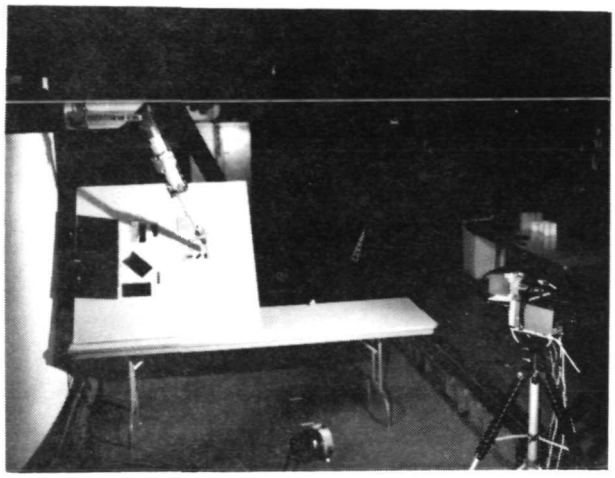

b) 45/45

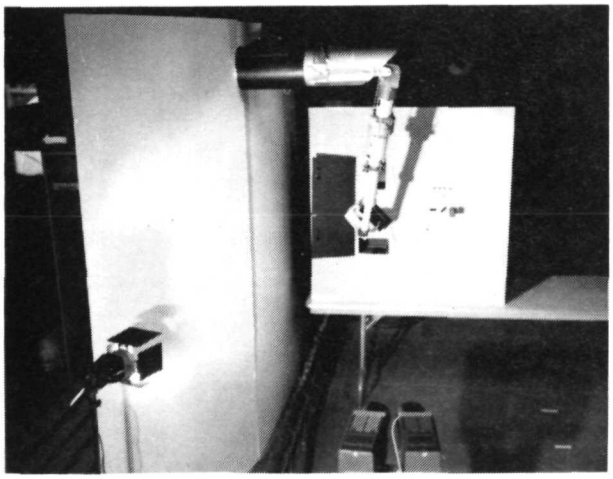

c) LOM (Horizontal) With Light
25 deg (0.436 rad) to the Left

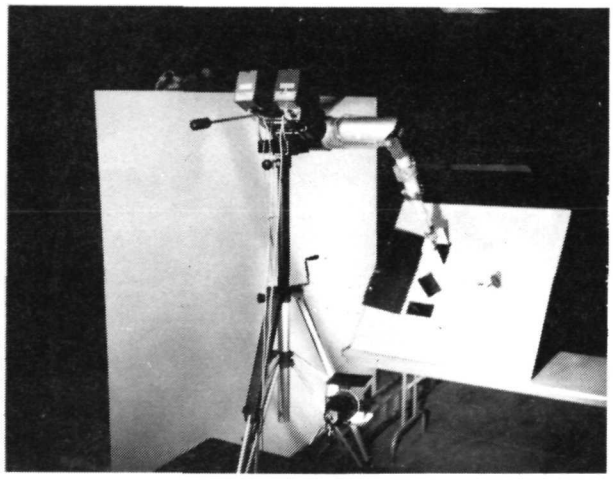

d) LOM (35)

Fig. VIII-7 Experimental Setups for Manipulator Task Simulation

Table VIII-6 Experimental Setups for Manipulator Task Simulation

VIEWING METHOD	CAMERA LOCATION	LIGHTING LOCATION	TASK PANEL ORIENTATION	MONITOR LOCATION
1. 45 right	45 deg (0.785 rad) to the Right	45 deg (0.785 rad) to the Right	Vertical	45 deg (0.785 rad) to the Left
2. 45/45	45 deg (0.785 rad) to the Right	45 deg (0.785 rad) to the Right	45 deg (0.785 rad) to the Vertical	45 deg (0.785 rad) to the Left
3. 45 down	Straight Away	Straight Away	45 deg (0.785 rad) to the Vertical	Straight Away
4. LOM (horizontal)	Straight Away	10 deg (0.175 rad) to the Left	Vertical	Straight Away
5. LOM (35)	35 deg (0.611 rad) Up	10 deg (0.175 rad) to the Right	45 deg (0.785 rad) to the Vertical	Straight Away
6. LOM (horizontal) and 90 right	1) Straight Away (Mono or Stereo) 2) 90 deg (1.571 rad) to the Right	Right for 25 deg (0.436 rad) to the Left	Vertical	Straight Away
7. LOM (horizontal) and 45 right	1) Straight Away 2) 45 deg (0.785 rad) to the Right	10 deg (0.175 rad) to the Left or 45 deg (0.785 rad) to the Right	Vertical	Straight Away or 45 deg (0.785 rad) to the Left
8. LOM (horizontal) stereo and 45 right	1) Straight Away (Stereo) 2) 45 deg (0.785 rad) to the Right	10 deg (0.175 rad) to the Left	Vertical	Straight Away
9. LOM (horizontal) and 45 right stereo	1) Straight Away 2) 45 deg (0.785 rad) to the Right (Stereo)	45 deg (0.785 rad) to the Right	Vertical	45 deg (0.785 rad) to the Left
10. LOM (35) and 45/45 mono	1) 35 deg (0.611 rad) Up 2) 45 deg (0.785 rad) to the Right	45 deg (0.785 rad) to the Right	45 deg (0.785 rad) to the Vertical	Straight Away or 45 deg (0.785 rad) to the Left
11. LOM (35) stereo and 45/45	1) 35 deg (0.611 rad) Up (Stereo) 2) 45 deg (0.785 rad) to the Right	35 deg (0.611 rad) Up	45 deg (0.785 rad) to the Vertical	Straight Away
12. LOM (35) and 45/45 stereo	1) 35 deg (0.611 rad) Up 2) 45 deg (0.785 rad) to the Right (Stereo)	45 deg (0.785 rad) to the Right	45 deg (0.785 rad) to the Vertical	45 deg (0.785 rad) to the Left
13. 45 right and 45 left	1) 45 deg (0.785 rad) to the Right (Mono or Stereo) 2) 45 deg (0.785 rad) to the Left	Straight Away	Vertical	45 deg (0.785 rad) to the Left
14. 45/45 and 45/45	1) 45 deg (0.785 rad) to the Right (Mono or Stereo) 2) 45 deg (0.785 rad) to the Left	Straight Away	45 deg (0.785 rad) to the Vertical	45 deg (0.785 rad) to the Left
15. 45 down and 45/45 mono	1) Straight Away 2) 45 deg (0.785 rad) to the Right	Straight Away or 45 deg (0.785 rad) to the Right	45 deg (0.785 rad) to the Vertical	Straight Away or 45 deg (0.785 rad) to the Left
16. 45 down stereo and 45/45	1) Straight Away (Stereo) 2) 45 deg (0.785 rad) to the Right	Straight Away	45 deg (0.785 rad) to the Vertical	Straight Away
17. 45 down and 45/45 stereo	1) Straight Away 2) 45 deg/45 deg (0.785 rad/0.785 rad) (Stereo)	45 deg (0.785 rad) to the Right	45 deg (0.785 rad) to the Vertical	45 deg (0.785 rad) to the Left

3. Results and Conclusions

The following discussion with tables describes the results for each experimental setup and gives general results for lighting, camera locations, number of views, stereo vs mono, and monitor orientation. The results fall into three categories:

1) Results from the pilot studies. These results determined the test setups for the major experiment.

2) Results from the major experiment. The major experiment evaluated those setups determined from the pilot studies.

3) Results from postexperimental study. This study compared the best of the experimental setups. Some modifications were also evaluated.

Each experimental setup was evaluated by the same operators and experimenters. Their comments are summarized in Table VIII-7.

One of the operators had only 20/100 vision in his left eye and only 50% stereo acuity. This subject's preference for stereo over mono was apparent, but not as strong as the other subject's. Likewise, his mean task times showed very little difference between mono and stereo, although stereo was somewhat faster.

The variances in the task times due to lighting location, task setup, operator learning and operator differences were too excessive to find any statistically significant differences in mean task times at the 90% confidence level. However, the results were highly consistent across operators and experimental setups.

It was concluded that stereo was better than mono for all camera locations. In fact, one stereo view was preferred over two mono views. Tasks which required the operator to make alignments in pitch or yaw were impossible using the one view mono unless the camera's LOS was normal to the pitch or yaw axis. Maintaining the LOS normal to the pitch and yaw axes was not always possible because of the manipulator arm or other object obstructing the camera's view. Therefore it was concluded that at least two mono views are required for an operational system. However one view stereo is sufficient even for these off axes alignments.

Table VIII-6 Subject Evaluation of Camera, Lighting, and Monitor Locations

VIEWING ANGLE	STEREO	MONO	LIGHTING ORIENTATION	MONITOR ORIENTATION
45 Right	About same as LOM (horizontal) Better than 45/45 because there was no pitch problem Better than 45 down because operators would rather have yaw problem then pitch problem Hand blocked view of blocks One view OK (another view not needed)	Stereo much easier LOM was easier Block task is almost impossible Drawer task is difficult Lot of yaw trouble Hand blocked view of blocks	Light on camera no problem Light straight away gave serious shadow problems (therefore the 45 left and 45 right method was rated *very* poor)	Monitor at 45 deg (0.785 rad) to the left better than straight away
LOM (horizontal)	Arm blocked view Very easy viewing	Stereo easier Very poor Had nothing to line up with Arm blocked view LOM and 45 right easier than LOM and 90 deg (1.571 rad) right	Glare a big problem Light at 10 deg (0.175 rad) left *much* better than at 25 deg (0.436 rad) left Two lights much better Light at 10 deg (0.175 rad) left *much* better than at 45 deg (0.785 rad) right	Monitor straight away much better than at 45 deg (0.785 rad) to the left
LOM (35)	Arm blocked view much more than in LOM (horizontal) position Monitor orientation a problem	Stereo much better Arm blocked view much more than in LOM (horizontal) Monitor orientation a problem	The 10 deg (0.175 rad) to the right [effective 45 deg (0.785 rad) down/ 10 deg (0.175 rad) right] was OK for this task because arm and shadows blocked same view Light 10 deg (0.175 rad) better than 45 deg (0.785 rad) to the right	Monitor oriented straight away was very disturbing with camera oriented 35 deg (0.611 rad) down. Would rather have monitor off in yaw than in pitch
45 down (only one subject)	Not nearly as easy as LOM or 45 right More trouble with pitch than yaw (i.e., rather have 45 right)	Stereo much easier Was not compared to 45 right	Light on camera was good	Better straight away than at 45 deg (0.785 rad) to the left
45/45	A lot of x, y, and z information, but must still estimate pitch, roll, and yaw Shadowing more critical in stereo 45 right much better (only need to estimate yaw)	Stereo much easier Almost impossible A lot of information about x, y, z but *very* little about Pitch, roll, and yaw	Light much better on camera than straight away because of shadows	Much better at 45 deg (0.785 rad) to the left than straight away

4. General Principles Derived from Simulation

a. Camera Location - For any manipulator arm configuration including a bilateral master/slave arm (electrical), it is assumed that the control system will allow control in monitor axes. That is, an up and down motion of the controller moves the slave up and down in the monitor; left and right of the controller are left and right in the monitor; and in and out are in and out of the monitor. In an actual FFTO system with a master/slave arm, the relationship of the master arm to the monitor and that of the camera to the slave arm should be identical. (This was accomplished in the simulation by keeping the monitor parallel to the prime viewing camera.) This assumes that control in monitor axes imposes no restrictions on camera location relative to the task.

Assuming that control is accomplished in monitor axes, the next most important consideration of camera location is its relationship to the principal axes of the task panel. The optimum view of an alignment task is, of course with an LOS perpendicular to the axis of alignment. Therefore for a task with a close tolerance for alignment in the Y axis, one would want the camera's LOS perpendicular to the Y axis of the task. But since the simulation task panel was constructed for equal tolerances in both the Y and the Z (horizontal and vertical) axes, the operator required equal information on Y and Z alignment errors, but little information on X errors (normal to the face of the panel). Therefore, optimum viewing for Y and Z would be with the camera's LOS parallel to the X axis, which would require estimating depth or size for X-axis alignment.

If better alignment were required in X, then using off-axis alignment--say 45 deg (0.785 rad) to the X axis--would give 0.707 times the X-axis resolution obtained with a normal axis alignment. If the 45 deg (0.785 rad) were towards the Y axis and remained normal to the Z axis, then the alignment resolution in Y would also be 0.707 of that from an axial alignment normal to the Y axis.

As another example, if the off-axis alignment were 30 deg (0.542 rad) downward, then the resolution relative to normal axis alignment would be 100% in Y, 50% in X, and 86.6% in Z. In other words, the optimum camera location depends on the tradeoff of the resolution required in each of the three axes.

When one considers view or camera locations, it is important to consider monoscopic vs stereoscopic viewing. For example, the preferred location for one-view stereo was 45 deg (0.785 rad) to the right because of the viewing problems due to the arm, shadows, and glare when the camera was pointed in the LOM. However, the required camera location for one-view monoscopic control was in the LOM because of the serious angle-estimation problems associated with the 45-deg (0.785-rad) location.

Another important consideration is the fact that the 45-deg (0.785-rad) right location was preferred to the 45-deg down/45-deg right location. For the latter location there are two angular estimates (pitch and yaw) required, whereas only one estimate is needed for the 45-deg (0.785-rad) right location. Moreover, the 45-deg (0.785-rad) right location was preferred over the 45-deg (0.785-rad) down location by all operators because they felt the pitch angle was more difficult to estimate than the yaw angle. The time data supports these preferences. However, these subjects may be more accustomed to estimating yaw than pitch because they normally use these manipulators with a direct view of the slave and the LOS to the slave end-effector is usually nearly horizontal.

b. Lighting - Lighting proved to be a much more critical variable than was anticipated. High contrast ratios, such as those found in space flight, mean that shadows or glare will entirely obscure the view of certain areas.

For the simulation, usually one light was used at a time in order to evaluate each lighting position independently. However, it is felt that multiple light sources, diffusors, and reflectors should be evaluated in Phase II of this contract because of several problems that were encountered with single light sources. For example, to minimize shadow effects in a one-light system, it was evident that the light should be located on or near the camera. In this manner any object that makes a shadow also blocks the camera's view of the area under the shadow. However, this arrangement could not be used when the cameras were mounted in the LOM (horizontal) or 45-deg and 45-deg (0.785-rad and 0.785-rad) locations.

In the former case, the intense glare from the face of the task panel reflected back into the camera. Positioning the light 10 deg (0.175 rad) to the left not only eliminated glare, but also minimized shadows for manipulating blocks on the right of the task panel. In contrast, since the drawers were much larger, their alignment was not significantly affected by small shadows and lighting position was less critical.

For the 45-deg and 45-deg (0.785-rad and 0.785-rad) setup the light could not be placed on either camera because of reflections off the task panel and into the other camera. An obvious recommendation is not to have two cameras (in the same plane) with equal incidence angles to a reflective surface.

The results of the major experiment indicate that lighting location is quite critical. For example, on two occasions with the LOM (horizontal) cameras, moving the light source only 15 deg (0.262 rad)--from 25 deg (0.436 rad) left to 10 deg (0.175) left--produced a greater than a 50% decrease in task time. And in several instances it was shown that, for a one-view stereo visual system, shadow-filling lights were as beneficial as a second monocular view. From a systems point of view, additional lighting is preferable to additional views.

c. Generalization of Results

Resolution Requirements - In this study the stereo vs mono evaluation was confounded with resolution since the stereo system had less resolution. The results indicate, however, that even a low-resolution stereo system is much more effective than a good-resolution mono system.

Head Motion Restrictions - The stereo vs mono evaluation was also confounded with head and torso restrictions since the stereo system required a precise head position. Here again, the results indicate that even a tightly restricted head-position stereoscopic system is much more effective than a less-restricting monoscopic system. Another important consideration is that the results obtained from the CRL master/slave manipulator system can be generalized to other systems that require less torso motion.

Primary Alignment Plane - The CRL simulation tasks were performed with all alignment in the plane of the task panel. Therefore, camera positions are identified with respect to the plane of the task panel and the results can be generalized to any alignment plane with respective camera positions.

E. SIMULATION OF SATELLITE CAPTURE AND INSPECTION

The purposes of this simulation were to investigate the remote viewing problems associated with an FFTO and to evaluate the use of FFTO TV systems in capturing and inspecting a spinning and nutating satellite. The simulation consisted of two basic tasks: (1) satellite inspection, and (2) capture of a spinning and nutating satellite.

The simulation was performed using Martin Marietta's Space Operations Simulator. This simulator is a six-degree-of-freedom, servodriven, computer-controlled device that uses a gimbaled attitude head to produce three rotational degrees of freedom and a moving base to produce three translational degrees of freedom.

The control station (Fig. VIII-8) consists of two translation controllers (one proportional and one on-off) at the operator's left, a proportional rotation controller at the right, two black-and-white monocular TV monitors, a stereo display system, a foot controller, a pencil controller, a ten-turn potentiometer, and an oscilloscope-generated display. The two translation controllers provide signals to the simulated free-flying vehicle in the form of a rate or acceleration command, while the rotational controller operates in a rate mode. Only the rate mode was used for translation during data collection because of the longer learning curve associated with the acceleration mode.

Figure VIII-9 depicts the Free-Flyer with its manipulator and attached cameras.

Manipulator length commands were generated with the on-off pencil controller, and the pitch of the camera and shoulder roll of the manipulator were controlled with the foot controller and rotational pot, respectively. Since the camera on the manipulator arm only pitched with respect to the manipulator arm, the axes of the camera were continuously changing with respect to the free-flyer when the manipulator arm was rotating. The oscilloscope displayed a revolving "pip", indicating the roll position of the manipulator with respect to the free-flyer.

The free-flyer and attached manipulator were mathematically modeled and appropriately scaled on an EAI 231-R analog computer according to the equations given in Appendix A. The resultant scaled analog signals were applied to the moving base and attitude head of the simulator.

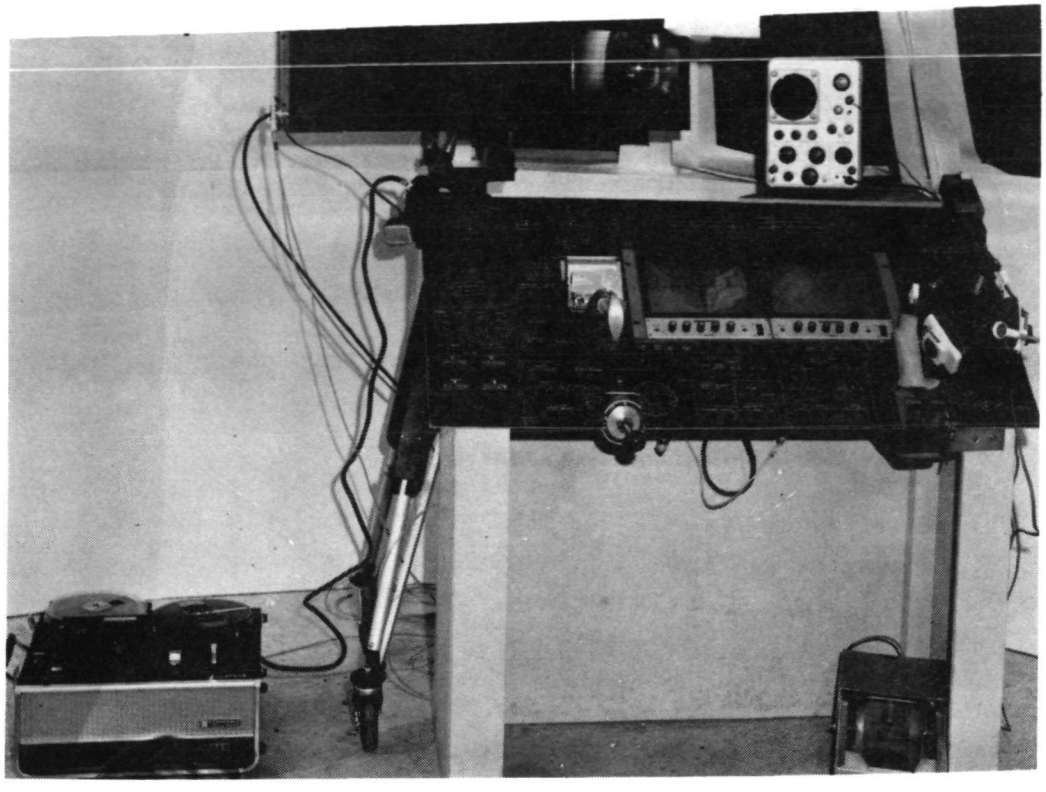

Fig. VIII-8 Control Station Mockup

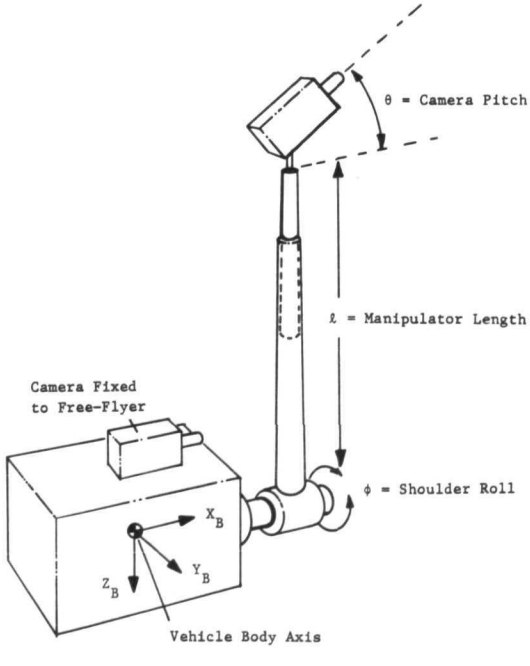

Fig. VIII-9 Free-Flyer with Manipulator and Attached Camera

The viewing system consisted of two small black-and-white Norelco LDH-0050 TV cameras with 20-mm lenses, two 25.4-cm (10-in.) black-and-white Audiotronics MMA-10 TV monitors, and a stereo system. A complete description of the stereo system is presented in Section VIII-B.

For the stereo system, the two TV cameras were mounted side by side on the attitude head of the simulator with an 11-deg (0.192-rad) convergence angle and a 12.7-cm (5-in.) baseline. When the vehicle is to be operated with a monocular system, only one camera is used and its image is displayed on one of the 25.4-cm (10-in.) monitors. To convert between stereo and monocular TV viewing, the operator only needs to shift his head and look at the appropriate display.

1. Task A - Satellite Inspection

The purpose of this task was to evaluate visual systems for in-close maneuvering while maintaining a constant distance and angular orientation with respect to a satellite. Four test subjects were used. Each test subject performed the task four times--twice using monocular TV and twice using stereo TV. The inside of a full-size mockup of 1/2 of the Skylab Orbital Workshop (Fig. VIII-10) was used for the target satellite.

Each test subject was instructed to start from an initial position facing one of the storage lockers located on the interior wall of the mockup above the water tanks, and to fly along the top edge of the lockers, maintaining a constant perpendicular distance, until he had traversed the entire semicircular distance along the wall (see Fig. VIII-11). Task times and X-Y plots of X-Y and Y-Z position were recorded.

None of the test data demonstrated statistical significance at the 90% confidence level. However, there were two observations of interest.

1) In 70% of the tests the subjects tended to fly the task smoother when using stereo TV.

2) In 75% of the tests the subjects tended to fly the task faster when using stereo TV.

The above results are supported by the subjective comments of the test subjects. All subjects preferred stereo TV for this task.

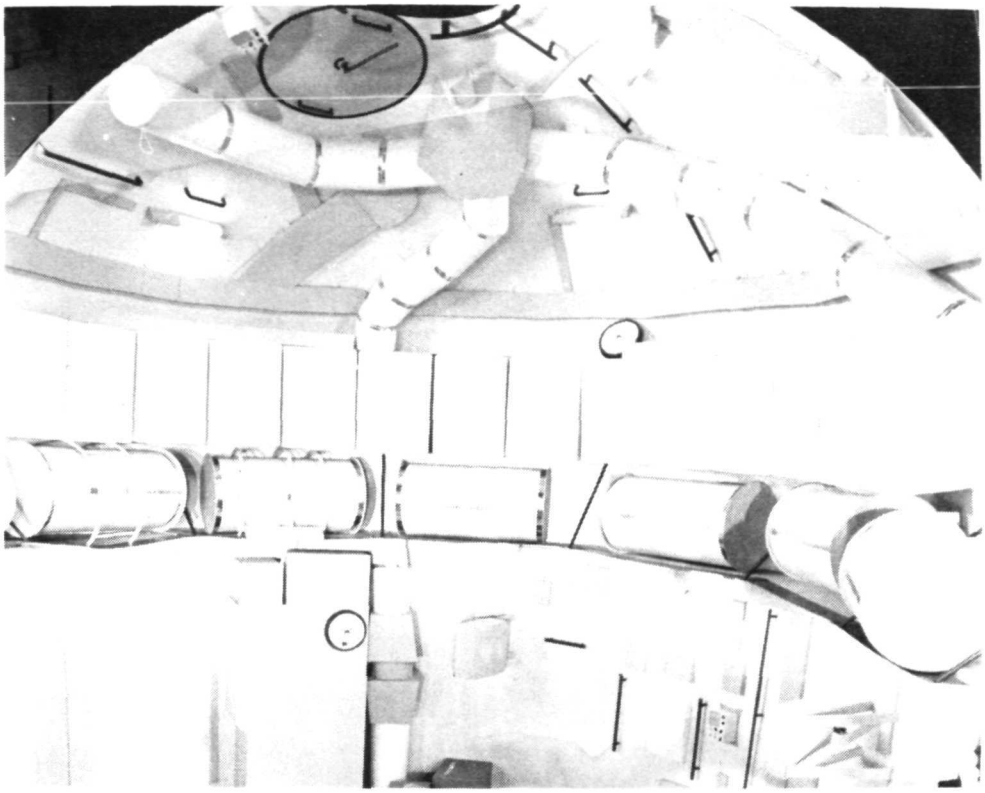

Fig. VIII-10 Inspection Task Mockup

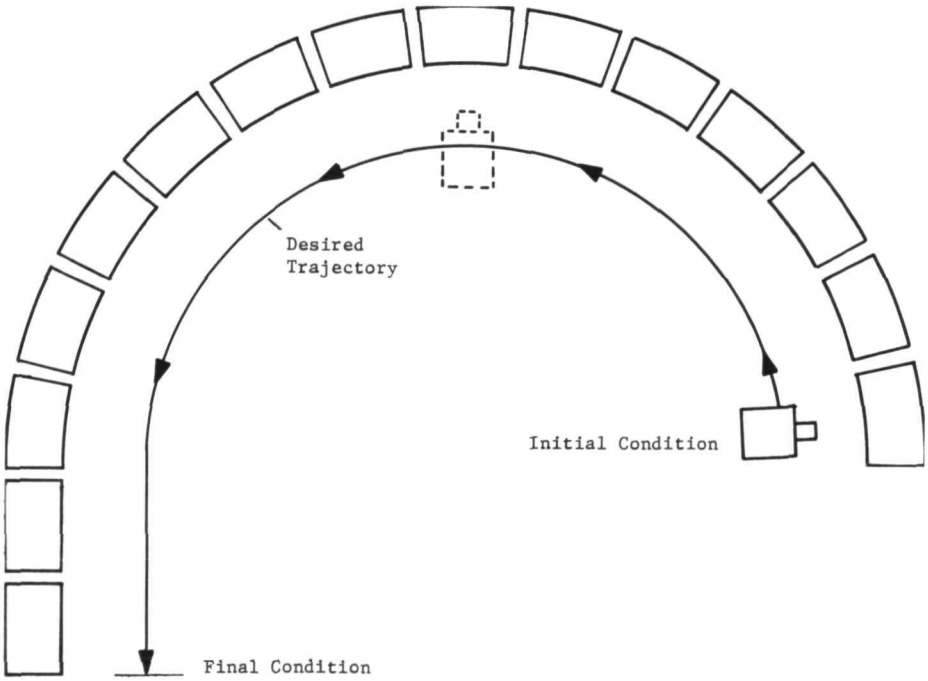

Fig. VIII-11 Inspection Task Trajectory

One further point of interest concerning this task was the orientation of the light source with respect to the optical axis of the TV sensor. Although the surfaces of the mockup tended to be nonglaring, the light, because of its point-source characteristics, produced bright spots in the display that hindered the ability of the operator to retain an optimum view. This problem was partially resolved by moving the light source so that the lighting angle was about 60 deg (1.047 rad) to the sensor's optical axis.

For the inspection task, it was the subjective opinion of the test subjects and the experimenters that stereo TV was better than monoscopic TV. The subjects also felt that they could control the FFTO more confidently in stereo than in mono; and although they were not skilled pilots, they felt fairly comfortable flying the task. Moreover, during training and check out of the simulator, everyone preferred to use the stereo system because it was easier and more comfortable to fly.

2. Task B - Satellite Capture

One technique proposed for the capture of a spinning and nutating satellite is as follows: A manipulator arm is extended to an appropriate length and rotated to match the nutation rate of the satellite. The manipulator arm then tracks the spin axis of the satellite for final lock on. In order to perform this task however it is required that the FFTO operator be able to approximately align the spin axis of the manipulator arm with the nutation axis of the satellite and to estimate the satellite's nutation angle and rate in order to estimate the required length and rate of spin of the manipulator arm.

Therefore, the satellite capture simulation task was broken into two phases. The initial phase was to use a camera fixed to the FFTO in order to estimate the nutation angle and rate and to roughly align the X axis of the FFTO with the nutation axis of the satellite. The final phase was to extend and spin up the manipulator arm to match the estimated nutation angle and rate. Then using a camera on the end of a manipulator arm a final and precise tracking of the satellite spin axis was performed just before contact for capture.

a. Phase I - Initial Alignment - To simulate a spinning/nutating satellite, a 1/20-scale model of 4.6-m (15-ft) diameter and 18.3-m (60-ft) long cylindrical satellite was constructed and attached to a spin motor (see Fig. VIII-12). The combination of the cylinder and spin motor was then attached to a two-degree-of-freedom servodriven gimbal whose spin and gimbal rates were controlled via the analog computer. This configuration was capable of simulating spin rates from 0 to 100 rpm and nutation rates from 0 to 10 rpm.

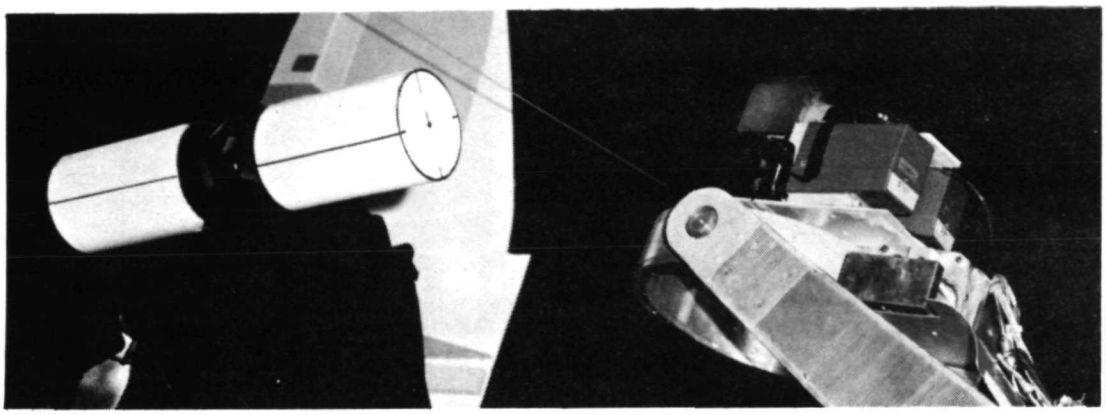

Fig. VIII-12 1/20-Scale Model of the Satellite

The operator's task was to estimate the nutation angle of the satellite from two positions relative to the satellite--parallel to the nutation axis, and perpendicular to the axis.

After the test subject had estimated the nutation angle, he was instructed to align the attitude and position of the free-flyer's camera axis with respect to the nutation axis of the satellite. When the operator felt he was positioned on the nutation axis, his final conditions were recorded.

The independent variables of interest were: (1) the initial location of the free-flyer--either 30.5 m (100 ft) to the side (with the satellite off to the left), or about 30.5 m (100 ft) out in front (with the satellite up and to the right); (2) nutation rate--0.0, 0.5, or 1.0 rad/sec (0.0, 28.7, or 57.3 deg/sec); (3) the satellites spin rate--0, 5, or 10 rad/sec (0, 28.7, or 57.3 deg/sec); (4) the viewing dimension--either monoscopic or stereoscopic; and (5) reticles--either stereo or monocular. The dependent variables were the operator's estimate of the nutation angle, his alignment perpendicular to and parallel to the axis of nutation, and the time required to complete the task. Four nonpilot subjects were used in a counterbalanced experimental design which partially confounded subjects with each of the two way interactions of the first three independent variables.

The effective stereo baseline for this phase was 127 cm (50 in.). The lighting source was located directly on top of the cameras and centered between the two stereo cameras. The reticles were positioned in front of the monitor face for the monocular display and in front of the fresnel lens for the stereo display (see

Fig. VIII-13 and VIII-14). The stereo reticle had only horizontal lines (since vertical lines require a more complex stereo display) and was used on both kinds of displays to compare monoscopic vs stereoscopic viewing without the effects of the different reticles. The monocular reticle was used on the monoscopic display to compare the effect of using a different reticle independent of the effects of stereo vs monoscopic viewing.

b. Phase II-Final Alignment - In this subtask, the configuration was simulated by attaching a 1/4-scale model of the circular face of a cylindrical satellite (Fig. VIII-15) to the aforementioned spin motor, which was fastened to a two-degree-of-freedom gimbal. However, the gimbal was fixed in a given attitude (i.e., the nutation angle). The spin motor rotated the disk at the satellite spin rate, and the relative motion between the satellite and the camera attached to the manipulator was applied to the moving base and attitude head of the simulator according to the equations given in Appendix A. By inspecting these equations, one can see that, except for the spin of the satellite, the relative motion between the TV camera and the satellite is due to the fact that the freeflyer's X-axis (spin axis of the arm) is not boresighted in position and attitude with the cone axis of the satellite and the length and spin rate of the manipulator arm do not match the nutation angle and rate.

The following paragraphs describe these sources of error that the operator must detect and correct.

Spin Rate of the Arm - If the FFTO boom is spinning too slow (or too fast) with respect to the satellite's nutation rate, the view of the satellite will be drifting at a constant rate to the left (or right) in the FOV. This can be corrected by speeding up (or slowing down) the arm using the ten-turn potentiometer on the simulator control panel. A displacement of the satellite left or right in the FOV (a phase error) can be corrected in a like manner.

Length of the Spinning Boom - If the boom is too short, the satellite will be displaced up in the field of view; and if it is too long, the satellite will be too low. This can be corrected using the pencil controller.

Tilt of the Camera - If the camera is pitched too far down, the center of the satellite will be up in the FOV but will also be tilted up. Therefore, the length of the boom and the tilt of the camera could be adjusted so that the camera is parallel to and boresighted to the satellite spin axes.

Fig. VIII-13 Stereo Reticle

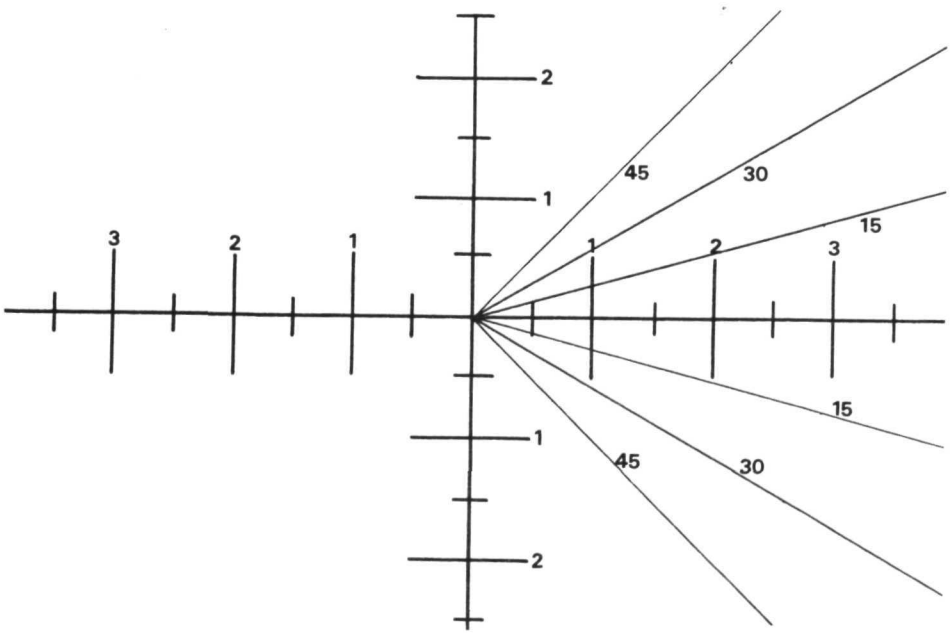

Fig. VIII-14 Monocular Reticle

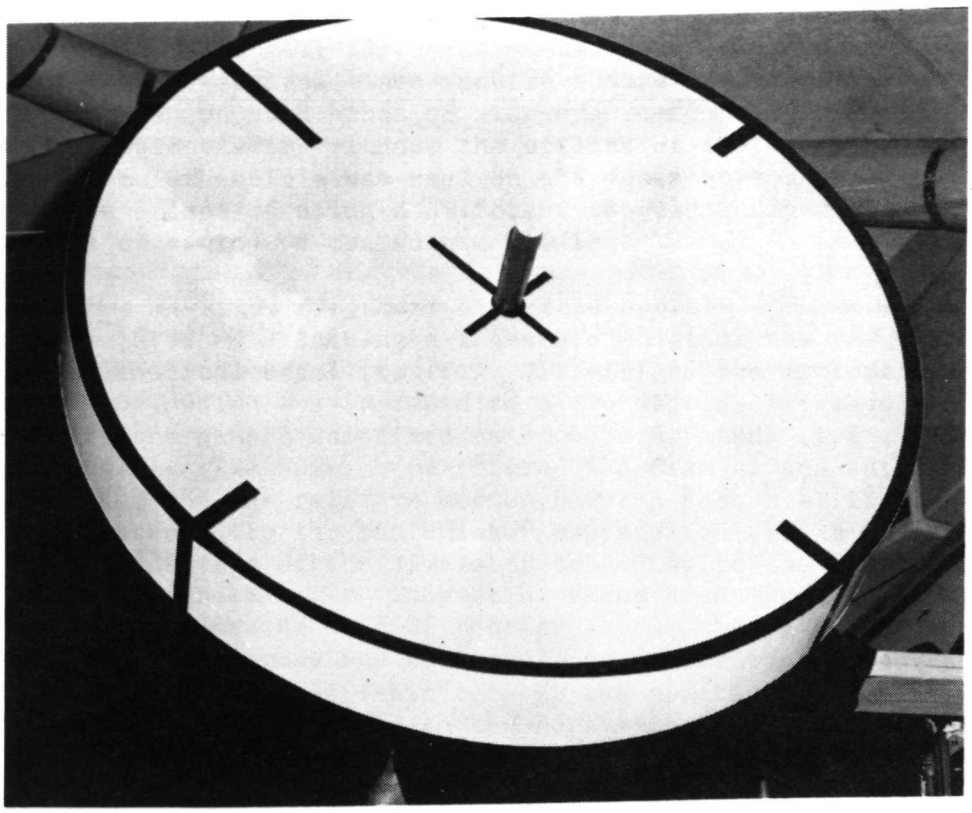

Fig. VIII-15 1/4-Scale Model of the Satellite

These first three sources of error were not evaluated because the operator was told that they were not critical to the task, except insofar as he was to keep the center of the axis of rotation in the FOV to correct the errors described below.

X Error - An error in X-axis alignment was not critical although the closer the operator flew, the smaller his other errors would be.

Y and Z Errors - A Y-axis and/or Z-axis error in aligning the spin axis of the boom with the nutation axis of the satellite would make the spin axis of the satellite appear to circle clockwise in the FOV if the nutation were counterclockwise. By knowing the location of the spinning boom relative to the Y and Z axes of the free-flyer when the satellite appeared at the top of FOV, the operator knew the direction of the Y and Z error. The radius of the circular motion then indicated the magnitude of the error vector in the Y-Z plane.

A revolving pip on the oscilloscope display indicated where the spinning boom was relative to the free-flyer coordinate system. The operator watched the circle made by the satellite, and when it was at the top of his view he would look at the pip on the oscilloscope and command a translation in the direction of the spinning boom at that moment.

Roll - There was no difference between controlling the roll of the free-flyer and controlling the spinning boom since the boom was spinning about the free-flyer's roll axis. Therefore, roll was not used in the simulation. Roll could, however, be used to move the satellite left or right in the FOV.

Pitch and Yaw - A pitch and/or yaw error in aligning the spin axis of the boom (FFTO X-axis) with the nutation axis of the satellite made the satellite appear to oscillate in and out in the FOV. Again, the pip on the oscilloscope was used to indicate the boom's position. When the satellite was at its closest position in the FOV, the operator would pitch or roll towards the boom. In other words, if the boom were to the left, he would yaw left; and if the boom were up, he would pitch up.

The IC alignment errors chosen for this task were somewhat larger than the mean errors resulting from the initial alignment phase. These initial conditions were +1.8-m (6 ft) in Y, +0.6-m (2 ft) in Z, -10.4-m (34 ft) in X, +3-deg (0.052-rad) in pitch, +3-deg (0.052-rad) in yaw, and 0-deg (0-rad) in roll. The effective stereo baseline for the stereo task was 38-cm (15 in.). The lighting conditions and reticles were identical to those used in the initial phase of this task.

The operator was instructed to keep the spin axis of the satellite within his FOV and to null all relative rates on his display (except for the spinning of the satellite). When he felt he had nulled all relative rates, the computer was put in hold and the final conditions and total alignment time were recorded.

c. Results - The results of the satellite capture simulation are shown in Table VIII-8 for both the initial alignment and the final alignment tasks.

*Table VIII-8 Results of the Satellite Capture Simulation**

PARAMETER	MEAN ERROR	STANDARD DEVIATION
Phase I - Initial Alignment		
Error of Nutation Angle, Viewed 90 deg (1.571 rad) to Nutation Axis		
Monocular TV (Stereo Reticle)	0.69 deg (0.0120 rad)	0.74 deg (0.0129 rad)
Stereo TV (Stereo Reticle)	-0.25 deg (-0.0044 rad)	2.5 deg (0.0346 rad)
Monocular TV (Monocular Reticle)	0.0 deg (0.0 rad)	2.74 deg (0.0472 rad)
FFTO Angular Alignment Error 90 deg (1.571 rad) to Nutation Axis		
Monocular TV	-6.54 deg (-0.1141 rad)	3.2 deg (0.0559 rad)
Stereo TV	-10.14 deg (-0.1770 rad)	5.0 deg (0.0873 rad)
FFTO Translational Offset from Nutation Axis at a Mean Distance of 31.8 m (106 ft)		
Monocular TV	1.17 m (3.9 ft)	0.89 m (2.96 ft)
Stereo TV	0.84 m (2.8 ft)	0.48 m (1.59 ft)
FFTO Angular Offset from Nutation Axis at a Mean Distance of 31.8 m (104.3 ft)		
Monocular TV	2.6 deg (0.0454 rad)	0.87 deg (0.015 rad)
Stereo TV	1.6 deg (0.0279 rad)	0.60 deg (0.0105 rad)
Error of Estimated Nutation Angle, Viewed Parallel to Nutation Axis		
Monocular TV (Stereo Reticle)	-5.1 deg (-0.0890 rad)	9.26 deg (0.1616 rad)
Stereo TV (Stereo Reticle)	-0.2 deg (-0.0035 rad)	2.64 deg (0.0461 rad)
Monocular TV (Monocular Reticle)	-4.1 deg (-0.0716 rad)	6.6 deg (0.1152 rad)
Phase II - Final Alignment		
FFTO Angular Offset from Nutation Axis, at a Mean Distance of 4.5 m (15 ft)		
Monocular TV	1.2 deg (0.029 rad)	0.98 deg (0.0171 rad)
Stereo TV	1.2 deg (0.029 rad)	0.75 deg (0.0131 rad)
FFTO Translational Offset from Nutation Axis at a Mean Distance of 4.5 m (15 ft)		
Monocular TV	4.88 cm (0.16 ft)	3.05 cm (0.10 ft)
Stereo TV	4.27 cm (0.14 ft)	1.83 cm (0.06 ft)

*Unless otherwise specified, each number refers to the mean performance using the "stereo" reticle.

None of the mono vs stereo comparisons demonstrated statistical significance at the 90% confidence level.

Figures VIII-16 thru VIII-18 are graphical presentations of the data for the 80% confidence interval (assuming the data has a normal distribution); this range of values corresponds to the mean value ± 1.28 standard deviations. Assuming that the mean and standard deviation are good estimates of the true mean and standard deviation, four out of five trials will fall within this range of values for the conditions specified.

d. Conclusions

Monocular TV vs Stereo TV - In both the initial alignment and final-alignment tasks, reticles were used on the TV monitor as a display aid for making absolute and relative judgments of size, motion, attitude, shape, azimuth, and elevation. Stereo TV is primarily a display aid for making absolute and relative judgments of depth. Therefore, unless a task requires significant depth alignment, a stereoscopic TV system would be of little benefit over a monocular system with an appropriate reticle. There does not appear to be any difference between monoscopic and stereo viewing in tasks that require some sort of alignment reticle (based on results for four subjects, with four simulation runs for each). Moreover, the subjects preferred the monocular system because of its better reticles, better resolution, freedom of head movement, and lower fatigue.

Monocular Reticle vs Stereo Reticle - Although the data do not show any significant performance difference between the stereo reticle (all horizontal lines) and the monocular reticle (vertical cross hairs and angles), the subjects felt much more confident using the monocular reticle to estimate the nutation angle from the side. Note that the range of data for the "monocular TV (monocular reticle)" alignment error estimated from the side (ref Fig. VIII-12) includes data from one run with a very large error; otherwise, the 80% confidence interval would be much tighter.

For estimating the nutation angle from the front, the subjects had a very small preference for the stereo reticle, but otherwise the monocular reticle was subjectively easier to use in both the initial-alignment and final-alignment tasks.

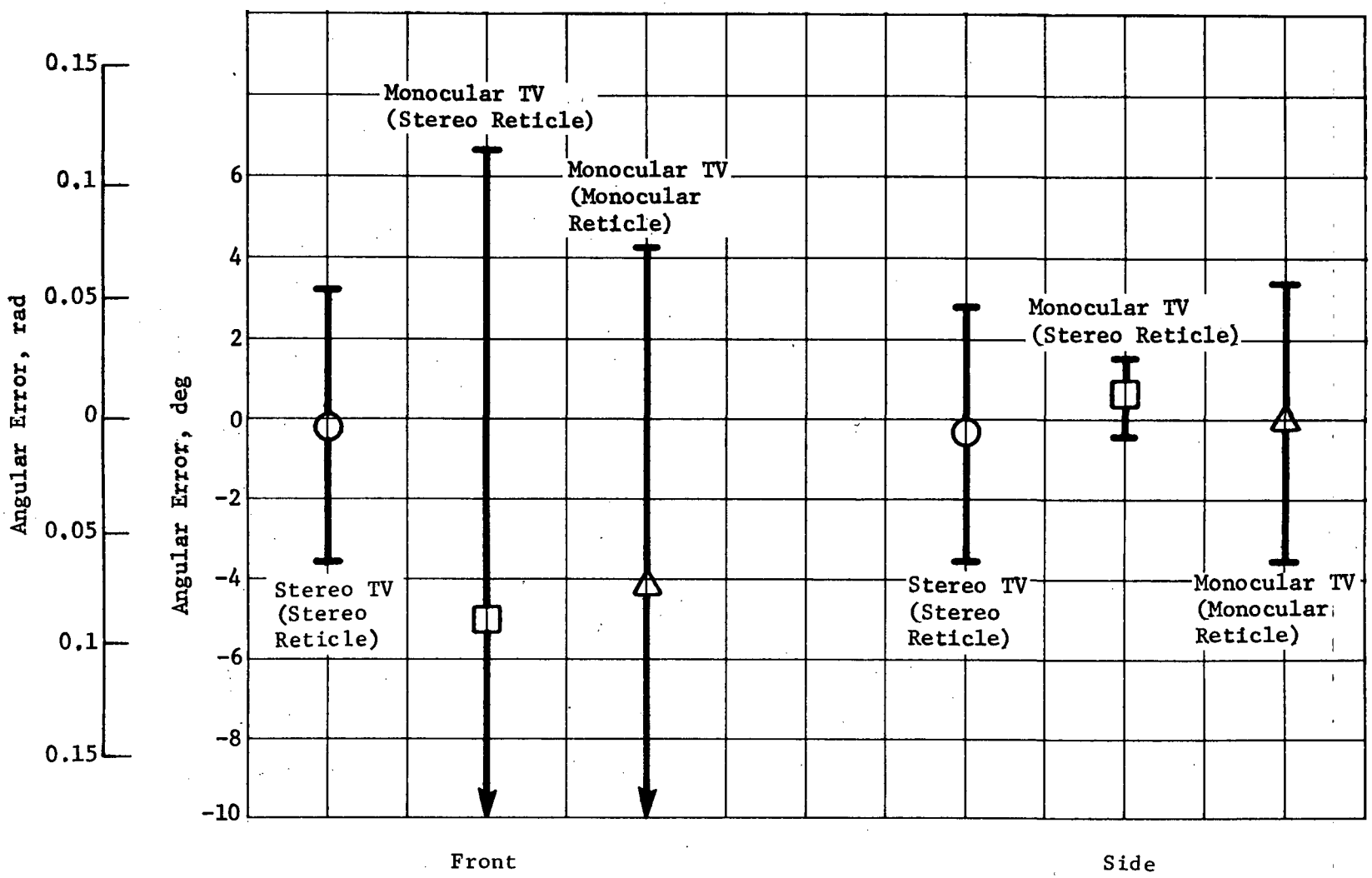

Fig. VIII-16 Mean and 80% Confidence Interval for Errors in Nutation Angle Estimation

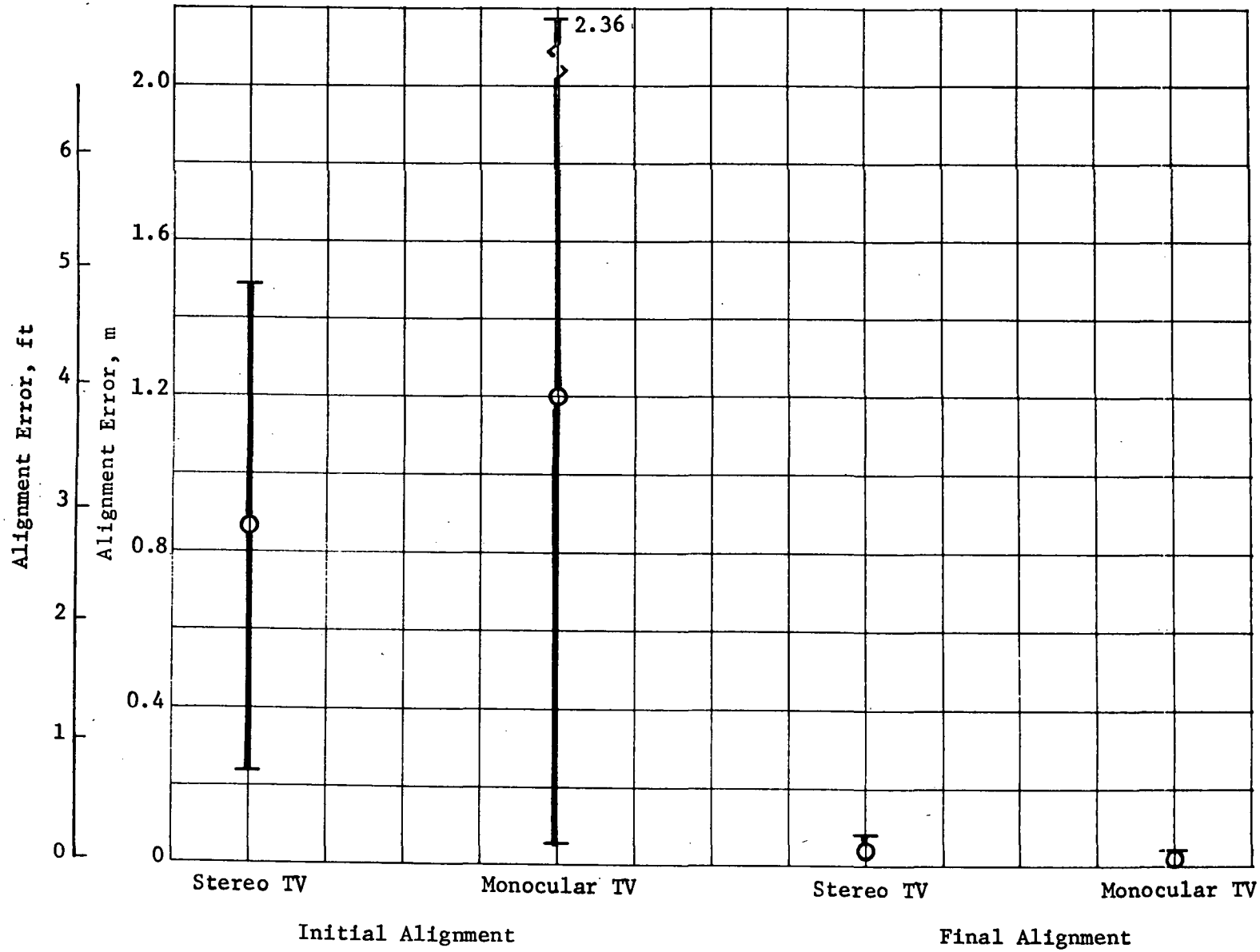

Fig. VIII-17 Mean and 80% Confidence Interval for Y and Z Alignment Error (Stereo Reticle)

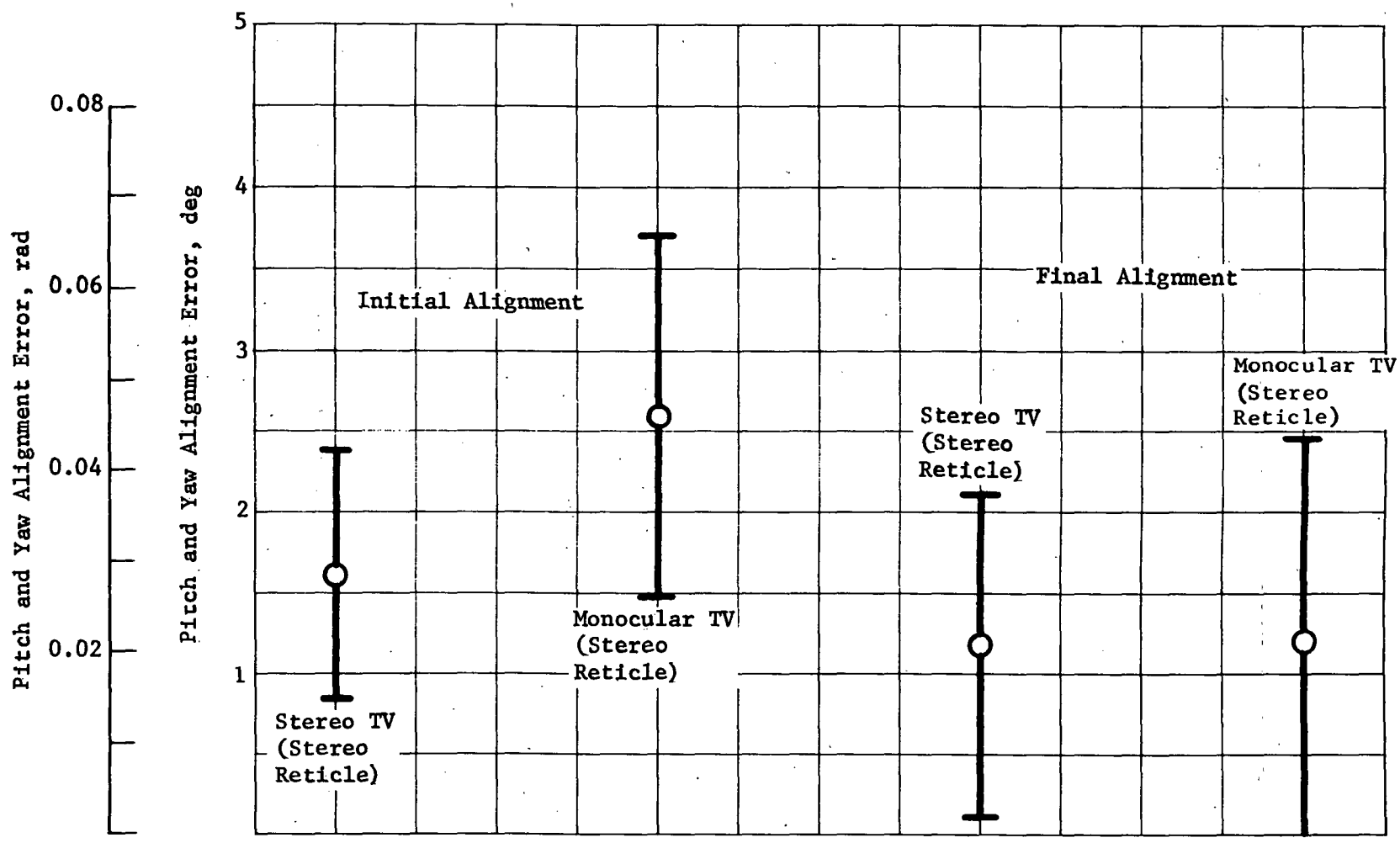

Fig. VIII-18 Mean and 80% Confidence Interval for Resultant Pitch and Yaw Alignment Error

The problem with using a stereo reticle that has any vertical lines and is placed on the fresnel lens or anywhere else between the monitors and the eye is that it will appear to be located a constant distance from the eye. And like lining up your finger with a distant object, it cannot be aligned with both eyes: you must either move your finger out and touch the object, shut one eye, or allow the dominant eye to do the alignment. In either case, you might as well have only a monoscopic view. With a stereo reticle, the vertical line must overlay the object being aligned in order to use both eyes for alignment.

A reticle for stereo TV can be made by using two reticles, one on the face of each stereo monitor. By changing their relative horizontal positions, the operator can change the reticle's apparent distance from the eye and thereby cause the reticle to appear on the object of interest in the stereo view. This can also provide optical ranging information. Once the relative horizontal positions of the reticles are known, the distance between the cameras and the object of interest in the stereo view may be determined. Therefore, the operator could adjust his reticle "in and out" until it appeared to be in the same plane as the target, at which time a numerical readout of his reticle position would be proportional to the range to the target.

Spin and Nutation Rate Estimations - It was shown to be quite easy to detect and determine nutation angles in excess of 0.4-deg (0.007-rad) at nutation rates of 1 rad/sec (57.3-deg/sec) and 0.25-rad/sec (14.3-deg/sec). These angles are easier to detect from the side than from the end. Spin rates up to 10-rad/sec (573-deg/sec) and nutation rates up to 1 rad/sec (57.3-deg/sec) were easily and accurately determined by all test subjects using a stop watch. (In actual operation the operator should count the number of revolutions at least twice as a precaution, because on one occasion a test subject miscounted.

Nutation Angle Estimates - The data indicated that when estimating nutation angles between 0.0-deg (0-rad) and 26.5-deg (0.463-rad) the test subjects could determine these angles to less than 4-deg (0.070-rad) when viewing the satellite from the side, but to only 16-deg (0.279-rad) when viewing the satellite from the end. Stereo viewing tended to be more accurate than monoscopic TV in both cases (with the same reticle).

Lighting - Lighting is not a problem when the object of interest has a smooth, nonglaring surface and light is not reflected directly back into the camera.

IX. CONCLUSIONS

1) The visual system must be a TV system.

2) The system components are within the state-of-the-art, except for monitors in the 25.4-cm (10-in.) to 30.5-cm (12-in.) range.

3) Stereoscopic TV allows good depth alignment from any viewing angle. In contrast, monoscopic TV allows good depth alignment from relatively few viewing angles.

4) For manipulative tasks, a two-view (two-camera) monoscopic system and a one-view (two-camera) stereoscopic system are approximately equivalent. For optimum viewing angles, lighting, and shadow suppression, stereo is better than mono. When the single stereo view is obscured by objects, shadows, or glare, the stereo camera may have to be moved before the task can continue. Therefore, it is better to use a one-view monoscopic, one-view stereo (three-camera) system to reduce camera-motion requirements during the task and provide redundancy.

5) For capturing a spinning and nutating satellite where a reticle is the primary visual aid, a stereo system is not much better than a monovisual, except for optical ranging.

6) When close maneuvering is required for satellite inspection, a stereoscopic system is desireable, but not required.

7) From a hardware viewpoint, a two-camera monoscopic display system and a stereoscopic-fresnel display system are equivalent on a volume, weight, and bandwidth basis; however, the stereoscopic system requires less power and less complex articulation mechanisms.

X. RECOMMENDATIONS

A. PRELIMINARY VISUAL SYSTEM CONCEPT

The proposed baseline FFTO visual system is a flexible, mission-dependent combination of monoscopic and stereoscopic television.

The recommended configuration for satellite *maintenance and inspection* is to use three cameras, as shown in Fig. X-1. Two identical stereo cameras are placed on a short deployable boom that provides a stereo view of the manipulator work envelope and four sides of the free-flyer vehicle. One pan/tilt unit is at the bottom of the boom and another is directly under the stereo cameras.

The two stereo lenses are placed 12.7 cm (5 in.) apart and have an 11 deg (0.192-rad) convergence angle, which provides an optimum stereo image from 38.1 cm (15 in.) to 9.1 m (30 ft). The lenses are 20 mm, which provides a 27 deg (0.471-rad) horizontal field of view; this field of view eliminates the need for a complex, automatic, end-effector tracking capability for presently proposed maintenance tasks.

A monoscopic camera with a remote-controlled, 12.5- to 75-mm zoom lens is located on the lower, forward corner of the free-flyer and is mounted on a pan/tilt unit. This camera, while normally not used, provides redundancy and an overall view of the manipulator when the task requires the stereo-pair to be close to the manipulator end-effector.

For *satellite retrieval* when the satellite is not spinning, the same kind of camera configuration is used (see Fig. X-2).

For the *worst-case nutating/spinning retrieval* mission, the manipulator must be $\geq$7.6 m ($\geq$25 ft) long. To eliminate additional length requirements, a camera is mounted on the manipulator, as shown in Fig. X-3. The simulations indicated that this task could be accomplished using a monoscopic view. However, if maintenance is required after the capture phase, the long manipulator would be used to support and position a stereo viewing pair, and the maintenance activity would be accomplished with a smaller, general-purpose manipulator.

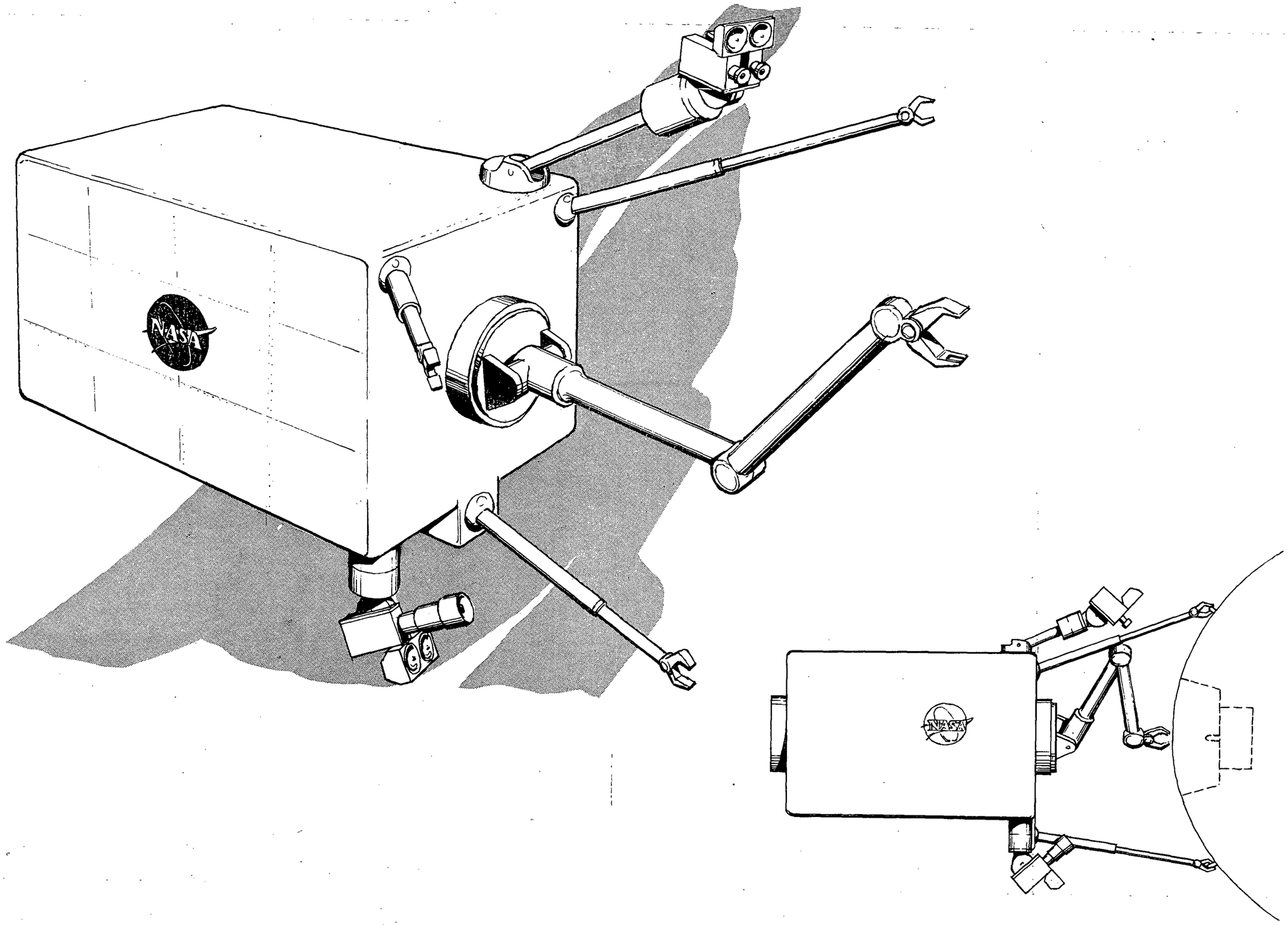

Fig. X-1 Camera Locations for Satellite Maintenance and Inspection

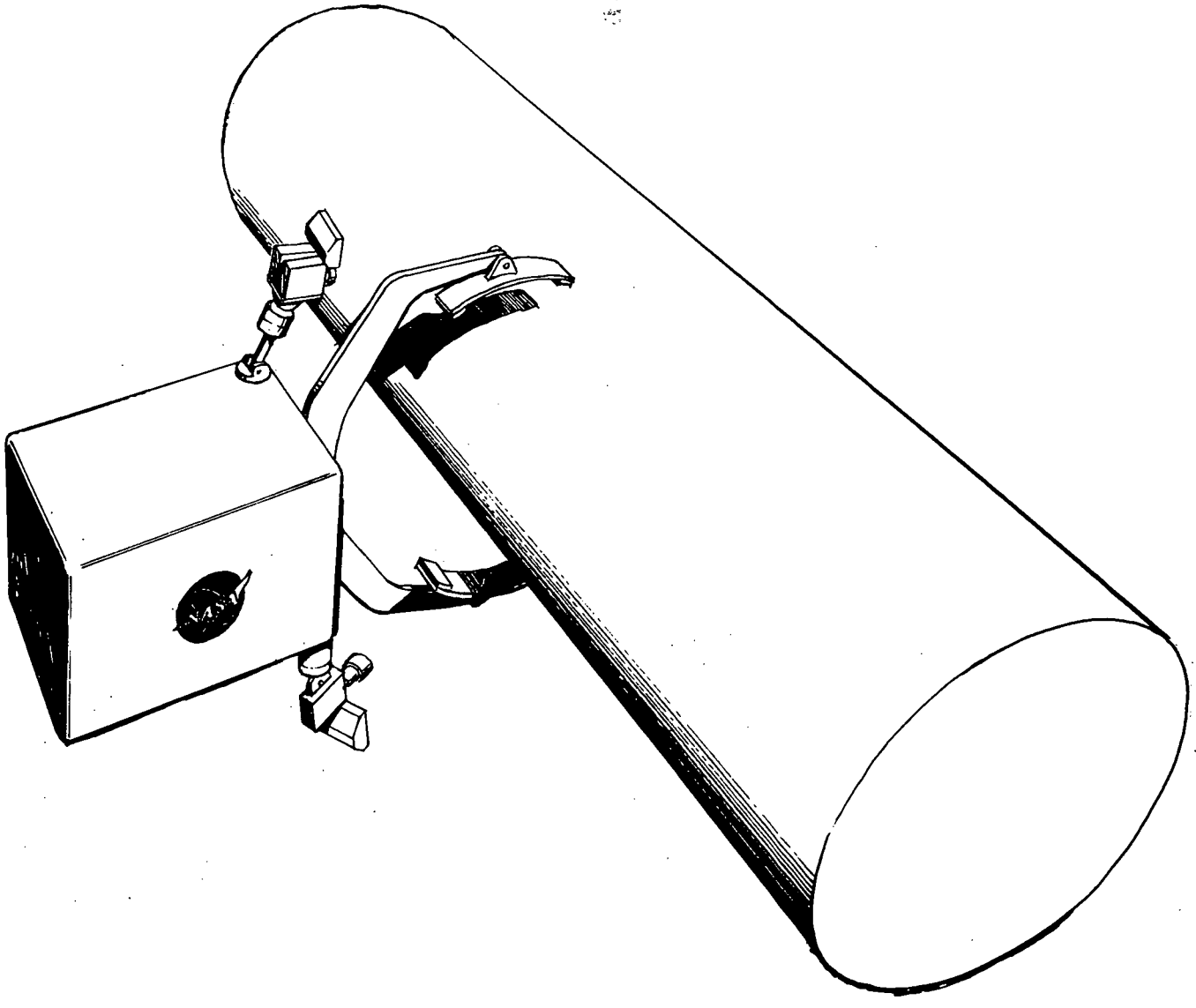

Fig. X-2 Camera Locations for Satellite Retrieval

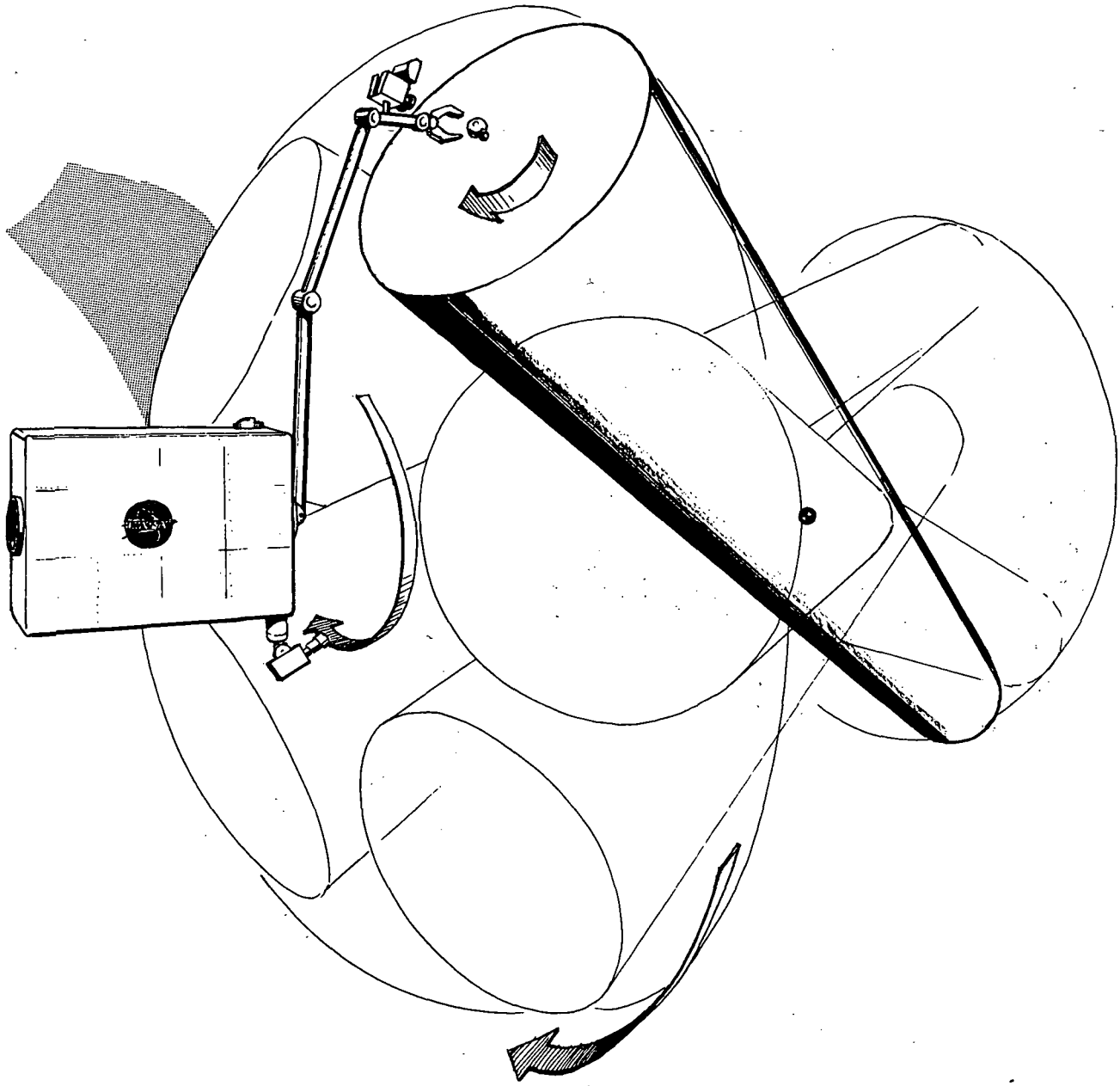

Fig. X-3 Camera Mounted on Manipulator

The displays and controls for the visual system are shown in Fig. X-4. This configuration was made without regard to the free-flyer subsystem controls and displays, which will be integrated as they are defined.

Two, 30.9-cm (12.5-in.) diagonal, black-and-white TV presentations are provided to the operator. The fresnel lens stereo unit is located on the right, a standard monoscopic monitor on the left. The stereo display contains two small monitors and, therefore, needs two standard controls.

Selector switches are provided to allow any of the cameras to be viewed on either display, in mono. The stereo display may be used as a monoscopic display by selecting the desired camera, shutting off either monitor, and using a mechanical lever on the right side of the fresnel lens to position a ground glass behind the fresnel lens. The ground glass has an alignment grid inscribed on its face that is identical to the grid shown on the monocular monitor.

In general, the stereoscopic system will be used for tasks requiring a high degree of manipulator dexterity and the monoscopic system will generally be used for gross vehicle alignments, single contacts, and overall task views. The "nutating tracking" display is provided directly above the stereo monitor to aid the operator in aligning the free-flyer with the satellite's nutation axis. This visual alignment technique is employed for the retrieval concept shown in Fig. X-3 and described in Section VII-E.

The remainder of the console contains standard camera, lighting, and pan/tilt controls. The video transmission link control enables the operator to switch transmitters in case of a failure.

B. PHASE II STUDY

During Phase I, the primary emphasis has been placed on developing visual system concepts and evaluating these concepts so that a system selection may be made. No detailed concept analysis has been performed, and no attempt has been made to optimize a single visual system concept in terms of subsystems and interactions between subsystems. Therefore, during Phase II, further studies and man-machine simulations must be performed before a preliminary design can be effected.

These studies should consider the following items:

1) Color vs black-and-white TV;

2) Lighting;

3) Visual aids such as mirrors, computer-augmented displays, and stereo reticles;

4) Ranges and control methods (automatic vs manual) for deployment/articulation mechanisms;

5) Noise and bandwidth limitations;

6) Continuous (zoom) vs discrete (turrent) field of view.

However, the primary areas to be emphasized during the Phase II study will be based upon the recommendations of the NASA.

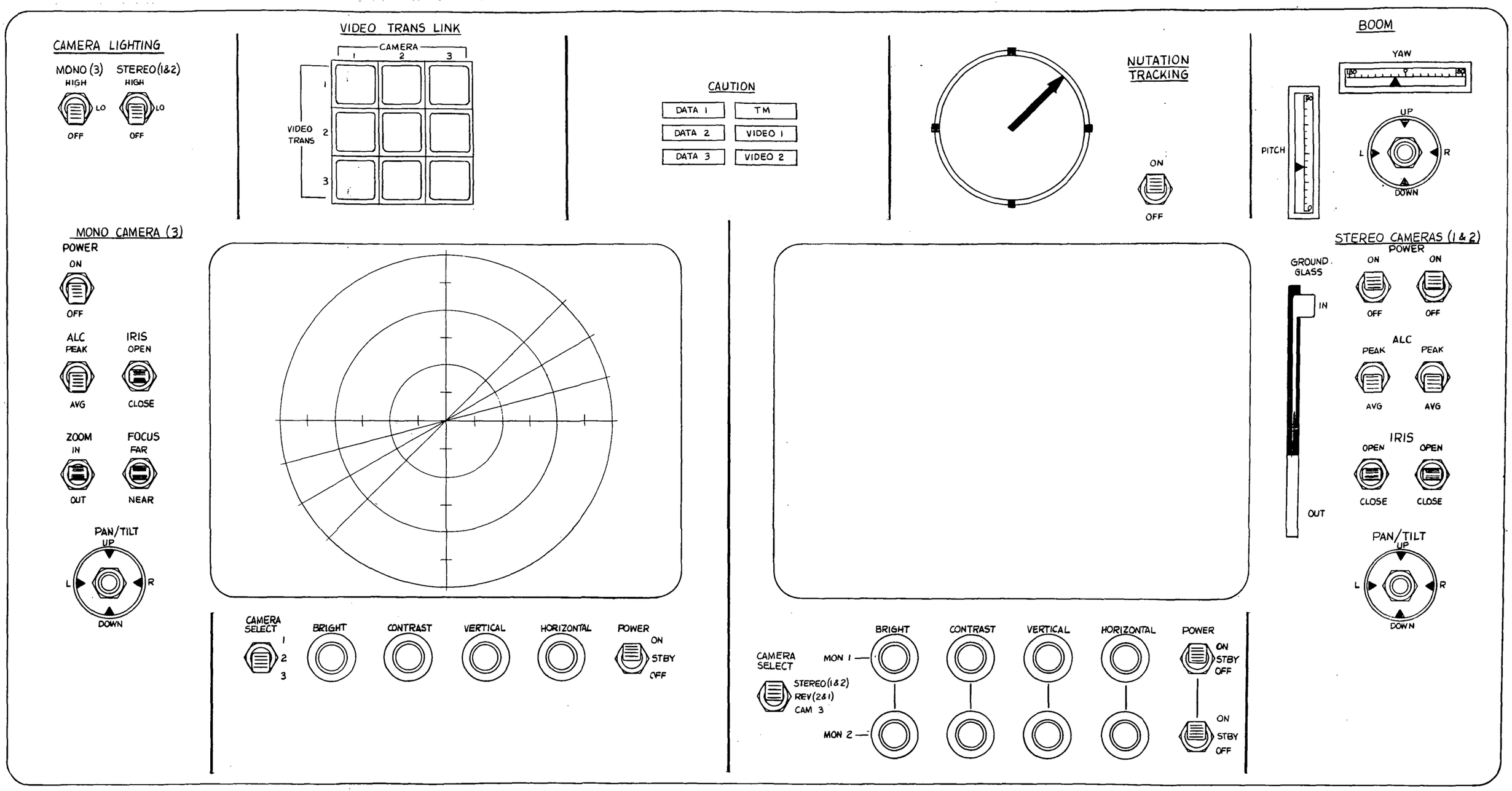

Fig. X-4 Visual System Displays and Controls

XI. REFERENCES

1. *Teleoperator System Man-Machine Interface Requirements for Satellite Retrieval and Servicing* (Contract NASW-2220), Essex Corp., June 1972.

2. *Shuttle Free-Flying Teleoperator System Experiment Definition* (Contract NAS8-27895), Bell Aerospace Co., Buffalo, New York, June 1972.

3. *Preliminary Design of a Shuttle Docking and Cargo Handling System* (Contract NAS9-11932), Martin Marietta Aerospace, Denver, Colorado, December 1971.

4. *Payload Effects Analysis Study* (Contract NAS-2156), Lockheed Missiles and Space Company, Sunnyvale, California, June 1971.

5. *A Study of Teleoperator Performance Requirements* (Contract NAS8-27013), URS/Matrix, July 1972.

APPENDIX--DERIVATION OF FREE-FLYER SIMULATION EQUATIONS*

This appendix presents the derivation of the equations of motion used in FFTO simulations to evaluate the two candidate visual systems. Two tasks were selected: Task 1 was an inspection task using a single camera (or stereo pair) mounted on the free-flyer, and Task 2 was an alignment task where the operator must align the axes of the free-flyer with the nutation axis of a spinning, nutating satellite.

For simulation purposes, Task 2 was divided into two parts. The first part, a gross alignment from a separation distance of between 50 and 100 ft (15.2 and 30.5 m), used the same equations and free-flyer as Task 1. The second part assumed that the TV camera was mounted on an extended, rotating arm attached to the free-flyer so that it can effectively track the face (or cylinder end) of the rotating satellite. For all tasks, the TV camera (or stereo cameras) was mounted on the attitude head of the space operations simulator.

The equations derived in this appendix were programmed on an EAI 231-R analog computer that is used to drive Martin Marietta's 6-DOF space operations simulator described in Chapter VIII. The simulation setup presents to the operator a realistic TV scene and motions resulting from input commands that are representative of actual, spatial free-flyer tasks.

The notation used in developing the equations is as follows: vectors are denoted with an overbar, and matrices are denoted by a double overbar. Subscripts preceding a vector denote the axis system in which the vector is resolved. A double subscript following a transformation matrix denotes the references between which the transformation is to take place. Thus ${}_3\bar{R}_2$ refers to the vector $\bar{R}_2$ resolved in coordinate system 3, and ${}_0\bar{R}_2$ refers to the same vector resolved in coordinate system 0. The matrix $\bar{\bar{D}}_{30}$ is the transformation matrix from coordinate system 3 to coordinate system 0. A double subscript following an angle indicates the two reference systems the angle measures between. For example, ϕ_{32} is the Euler angle locating reference 3 with respect to reference 2. The transformation matrices used in the following derivations are obtained from Appendix B of *EVA/IVA Simulation Dynamics* by J. R. Tewell and C. H. Johnson, Research Report R-67-8, Martin Marietta Aerospace, Denver, Colorado, February 1967.

---

*The work described in this appendix was performed under IRAD Task 48664.

Symbol	Definition
$\bar{\bar{D}}$	Denotes transformation matrix D
d	Elements of $\bar{\bar{D}}$
$\bar{F}$	Thrust force of free-flyer
L_a	Length of free-flyer rotating arm
L_n	Perpendicular distance from nutating axis to intersection of satellite spin axis and front face
M	Mass of free flyer
p, q, r	Roll, pitch, and yaw angular rates about x, y, and z free-flyer body axes
$\bar{R}$	Position vector
$\bar{S}$	Position vector
t	Time
x,y,z	Denotes coordinate axes
x_n	x component of R_n
x_o, y_o, z_o	Components of $\bar{S}$
$\bar{1}_x$, $\bar{1}_y$, $\bar{1}_z$	Unit vectors in the x, y, and z directions
ϕ, θ, ψ,	Roll (x), pitch (y), and yaw (z) Euler angles
ω	Angular rotation rate

1. Task 1 and Task 2a

For Tasks 1 and 2a, the equations involved are merely those connected with the free-flyer itself, namely those giving (1) translational motion of the free-flyer in an inertial axis system and (2) the Euler angles locating the body fixed axis relative to the inertial axis. For Task 1 a stationary target mockup was used for inspection, and for Task 2a a scaled model of a spinning,

nutating satellite was mounted in a two-axis, servo-driven gimbal system that used a separate spin motor to produce the spin and nutation. The two-axis gimbals were driven with computer-generated sine and cosine functions to obtain the nutation.

a. Coordinate Systems

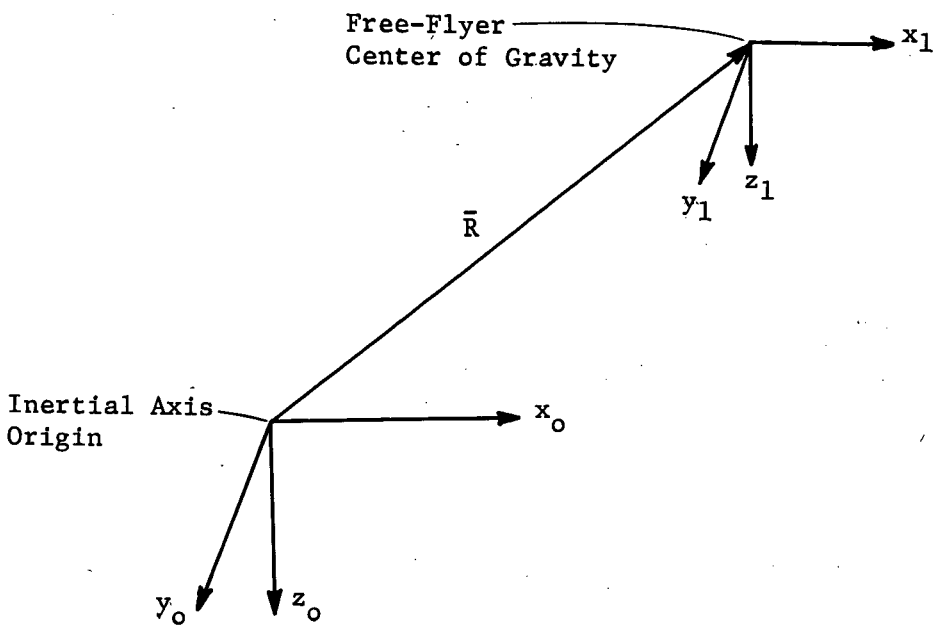

x_o, y_o, z_o = Inertial System

x_1, y_1, z_1 = Rotating System = Free-Flyer Body Axis System

b. Equations of Motion - The body axis rates (p, q, and r) are determined from the inputs of the rotational hand-controller. The Euler angle rates--assuming a roll, pitch, yaw sequence (simulator attitude head sequence)--are then obtained using the rate transformation

$$\begin{bmatrix} \dot{\phi} \\ \dot{\theta} \\ \dot{\psi} \end{bmatrix} = \begin{bmatrix} \cos\psi/\cos\theta & -\sin\psi/\cos\theta & 0 \\ \sin\psi & \cos\psi & 0 \\ \dfrac{-\cos\psi\sin\theta}{\cos\theta} & \dfrac{\sin\psi\sin\theta}{\cos\theta} & 1 \end{bmatrix} \begin{bmatrix} p \\ q \\ r \end{bmatrix}$$

These Euler angle rates are then integrated to obtain the Euler angles, from which the transformation $\bar{\bar{D}}_{10}$, from the body-axis system to the inertial-axis system, can be calculated. The Euler angles (ϕ, θ, and ψ) drive the simulator attitude head gimbals directly.

The inputs to the translational hand-controller are used to determine ${}_1\ddot{\bar{R}}$, the acceleration of the free-flyer in the free-flyer body axis system, which is calculated as

$$ {}_1\ddot{\bar{R}} = \frac{{}_1\bar{F}}{M} $$

Transforming this expression into the inertial-axis system and integrating gives the three carriage commands

$$ {}_o\bar{R} = \int\int \bar{\bar{D}}_{10}\ {}_1\ddot{\bar{R}}\ dt\ dt. $$

To simplify translational control of the free-flyer, a velocity (instead of acceleration) control mode was also implemented. When this mode was used the carriage commands were given by

$$ {}_o\bar{R} = \int \bar{\bar{D}}_{10}\ {}_1\dot{\bar{R}}\ dt. $$

2. <u>Task 2b</u>

In this task the relative motion between the face (or cylinder end) of the nutating satellite and the camera located on the rotating arm must be determined. This relative motion constitutes the commands to the simulator's translational motion carriages.

For this simulation, the mockup of the satellite was given the same spin as the satellite and was constructed so that the fixed face angle was equal to half the cone angle. Consequently, the relative angular orientation required to drive the attitude head was only that orientation relating the position of the TV camera to the inertial system. Figure A-1 depicts the spatial free-flyer, arm, camera, and satellite configuration.

a. Coordinate Systems

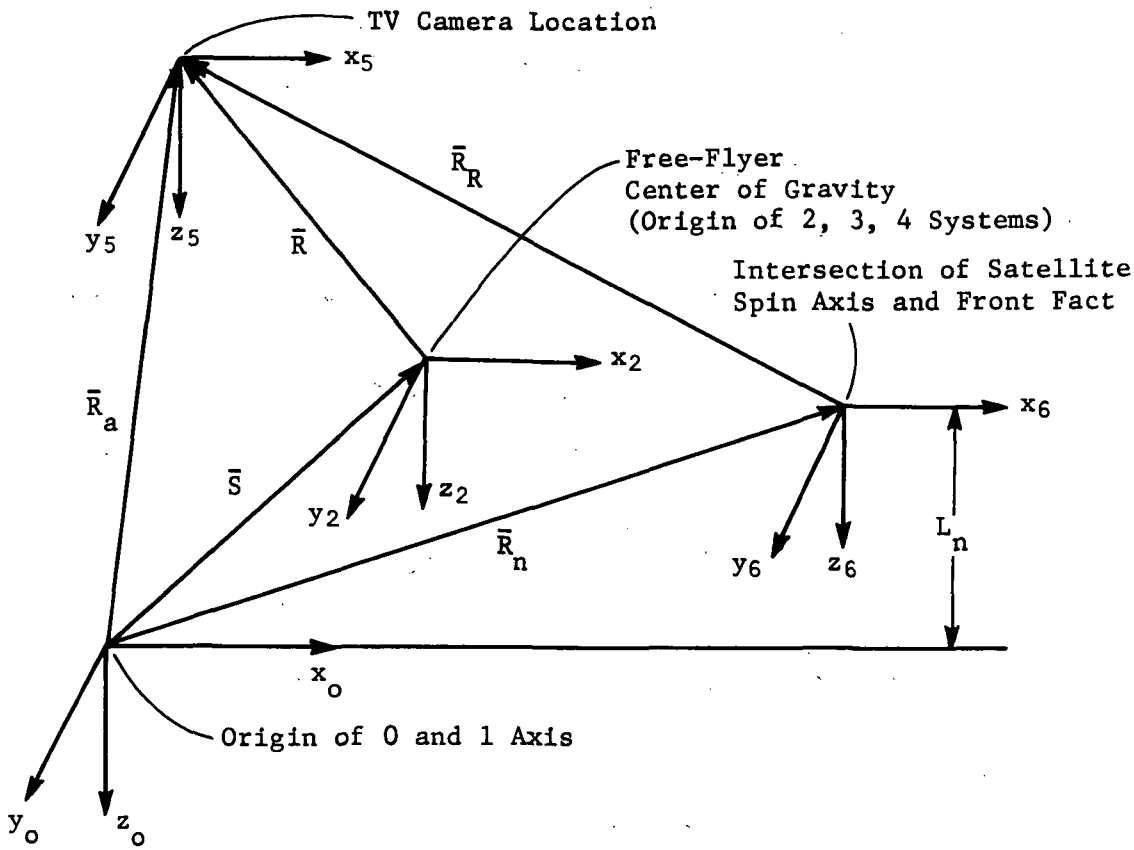

Symbol	Definition
x_o, y_o, z_o =	Inertial system
x_1, y_1, z_1 =	Rotating system - initially parallel to x_o, y_o, z_o; rotates about x_1 only; has same origin as x_o, y_o, z_o
x_2, y_2, z_2 =	Nonrotating system - parallel to x_o, y_o, z_o but origin displaced by $\bar{S}$

x_3, y_3, z_3 = Rotating system - free-flyer body axis system; has same origin as x_2, y_2, z_2

x_4, y_4, z_4 = Rotating system - fixed in rotating arm of free-flyer; has same origin as x_2, y_2, z_2

x_5, y_5, z_5 = Rotating system - fixed in camera on end of arm; rotates in pitch relative to x_2, y_2, z_2

x_6, y_6, z_6 = Nonrotating system - located at intersection of satellite spin axis and front face.

Assumptions

1. Spinning arm is connected to free-flyer at its cg and produces no dynamic reaction to the free-flyer.

2. Free-flyer yaw and pitch attitudes are small angles.

3. Spinning rate of arm is approximately equal to rate of satellite nutation.

4. Satellite is coning at nutation rate ω.

5. Camera on end of arm rotates with arm.

Translational Motion Equations - In axis 4, the arm length is given by

$$_4\bar{R} = \bar{1}_x\ (0) + \bar{1}_y\ (0) + \bar{1}_z\ (-L_a),$$

where L_a is the arm length and is allowed to vary. Axis 4 is rotating relative to 3 at the arm rotation rate $(\dot{\phi}_{43})$ about the x_4 axis only. Then in 3,

$$_3\bar{R} = \bar{\bar{D}}_{43}\ (\phi_{43})\ {}_4\bar{R}$$

or

$$_3\bar{R} = \bar{1}_x\ (0) + \bar{1}_y\ (L_a \sin \phi_{43}) + \bar{1}_z\ (-L_a \cos \phi_{43}),$$

where $\phi_{43} = \int \dot{\phi}_{43}\ dt$.

Axis 3 is located relative to 2 by the Euler angles ψ_{32}, θ_{32}, and ϕ_{32} and a sequence of yaw, pitch, and roll. Assuming small angles for ψ_{32} and θ_{32}, and transforming ${}_3\bar{R}$ to the 2 axis,

$$ {}_2\bar{R} = \bar{\bar{D}}_{32} \left(\psi_{32}, \theta_{32}, \phi_{32}\right) {}_3\bar{R} $$

or

$$ \begin{aligned} {}_2\bar{R} = \bar{1}_x & \Big[(\theta_{32} \sin \phi_{32} - \psi_{32} \cos \phi_{32}) L_a \sin \phi_{43} - \\ & (\theta_{32} \cos \phi_{32} + \psi_{32} \sin \phi_{32}) L_a \cos \phi_{43}\Big] \\ + \bar{1}_y & \Big[\cos \phi_{32} L_a \sin \phi_{43} + \sin \phi_{32} L_a \cos \phi_{43}\Big] \\ + \bar{1}_z & \Big[\sin \phi_{32} L_a \sin \phi_{43} - \cos \phi_{32} L_a \cos \phi_{43}\Big] \end{aligned} $$

Combining roll angles,

$$ \begin{aligned} {}_2\bar{R} = \bar{1}_x & \Big[-L_a \theta_{32} \cos \phi_{42} - L_a \psi_{32} \sin \phi_{42}\Big] \\ + \bar{1}_y & \Big[L_a \sin \phi_{42}\Big] \\ + \bar{1}_z & \Big[-L_a \cos \phi_{42}\Big] \end{aligned} $$

where $\phi_{42} = \phi_{43} + \phi_{32}$.

The location of the tip of the arm from the origin of the inertial-axis system is obtained by adding $\bar{S}$ to ${}_2\bar{R}$, where

$$ {}_o\bar{S} = \bar{1}_x X_o + \bar{1}_y Y_o + \bar{1}_z Z_o. $$

Thus,

$$ \begin{aligned} {}_o\bar{R}_a = \bar{1}_x & \Big[X_o - L_a \theta_{32} \cos \phi_{42} - L_a \psi_{32} \sin \phi_{42}\Big] \\ + \bar{1}_y & \Big[Y_o + L_a \sin \phi_{42}\Big] \\ + \bar{1}_z & \Big[Z_o - L_a \cos \phi_{42}\Big] \end{aligned} $$

For simulation purposes it was desired to obtain the relative motion of the nutating satellite with respect to the tip of the free-flyer manipulator arm.

The vector ${}_o\bar{R}_n$, which locates the point of intersection of the satellite spin axis and the front surface with respect to the origin of the inertial-axis system, is given by

$${}_o\bar{R}_n = \bar{I}_x (X_n) + \bar{I}_y L_n (\sin \omega t) - \bar{I}_z L_n (\cos \omega t),$$

where ω is the constant nutation rate of the nutating satellite. The relative motion of the satellite with respect to the tip of the manupilator arm is then

$$\begin{aligned} {}_o\bar{R}_R &= {}_o\bar{R}_a - {}_o\bar{R}_n \\ &= \bar{I}_x \left[X_o - X_n - L_a \theta_{32} \cos \phi_{42} - L_a \psi_{32} \sin \phi_{42}\right] \\ &+ \bar{I}_y \left[Y_o + L_a \sin \phi_{42} - L_n \sin \omega t\right] \\ &+ \bar{I}_z \left[Z_o - L_a \cos \phi_{42} + L_n \cos \omega t\right] . \end{aligned}$$

Angular Relationship Equations - The angular commands that are sent to the attitude head of the space operations simulator are obtained by equating proper transformation matrices that relate the attitude of the free-flyer camera to that of the nutating satellite.

The transformation from the camera-axis system to the inertial-axis system is given by

$$\bar{\bar{D}}_{50} = \bar{\bar{D}}_{20} (0) \bar{\bar{D}}_{32} (\psi_{32}, \theta_{32}, \phi_{32}) \bar{\bar{D}}_{43} (\phi_{43}) \bar{\bar{D}}_{54} (\theta_{54}).$$

The elements of $\bar{\bar{D}}_{50}$ must then equal the elements of the transformation of the simulator attitude head, which has a roll, pitch, and yaw sequence, $\bar{\bar{D}} (\phi, \theta, \psi)$. From this transformation, the head angles are found to be:

$\sin \theta = {}_{13}d_{50}$;

$\tan \psi = -{}_{12}d_{50}/{}_{11}d_{50}$;

$\tan \phi = -{}_{23}d_{50}/{}_{33}d_{50}$.

Multiplying the matrices as indicated for $\bar{\bar{D}}_{50}$ (assuming small angles for ψ_{32}, θ_{32}, and θ_{54}), we obtain the following equations:

$$\theta = \theta_{32} \cos \phi_{42} + \psi_{32} \sin \phi_{42} + \theta_{54};$$

$$\psi = -\theta_{32} \sin \phi_{42} + \psi_{32} \cos \phi_{42};$$

$$\phi = \phi_{42}.$$

Since the simulator's roll gimbal cannot continuously roll according to $\phi = \phi_{42}$, the translational motion of the target due to this roll can be obtained by transforming ${}_o\bar{R}_R$ into the 1 axis, which is rotating relative to the inertial axis at ϕ_{42}. Thus,

$${}_1\bar{R}_R = \bar{\bar{D}}_{01} (\phi_{42}) \; {}_o\bar{R}_R.$$

Assuming that the angular rate $\dot{\phi}_{42}$ is always approximately the same as the nutation rate ω(i.e., if $\phi_{42} - \omega t$ is a small angle), then ${}_1\bar{R}_R$ becomes

$$\begin{aligned} {}_1\bar{R}_R = {} & \bar{1}_x \left[x_o - x_n - L_a \theta_{32} \cos \phi_{42} - L_a \psi_{32} \sin \phi_{42} \right] \\ & + \bar{1}_y \left[y_o \cos \phi_{42} - z_o \sin \phi_{42} + L_n (\phi_{42} - \omega t) \right] \\ & + \bar{1}_z \left[-y_o \sin \phi_{42} + z_o \cos \phi_{42} + L_n - L_a \right] . \end{aligned}$$

The components of ${}_1\bar{R}_R$ are the x, y, and z translation commands to the space operations simulator. Both ϕ_{42} and L_a were manually varied from the operator's console during the simulations.

The attitude angles to the simulator are the same as before, except for ϕ, which is zero. The effect of $\phi = 0$ is that the target will be seen to rotate at its spin rate, instead of at one less than the spin rate, which is the case in space. This effect will not influence the results of the simulation.