N73-19459

CONTROL SYSTEMS SECTION

CS- 47

DESIGN, FABRICATION, TESTING AND DELIVERY
OF A PROTOTYPE SELF-LOCKING ACTUATOR

FINAL REPORT

CASE FILE
COPY

PREPARED BY: J. E. Dever
J E Dever
Project Supervisor

APPROVED BY: J. E. Dever for
D E Glum
Project Manager

DATE 19 Jan 1973

AEROJET LIQUID ROCKET COMPANY
SACRAMENTO, CALIFORNIA

FORWARD

The work reported on herein was conducted by Aerojet Liquid Rocket Company (ALRC) for the National Aeronautics and Space Administration as authorized by Contract Number NAS 8-28247.

The program was conducted under the cognizance of Mr. K. R. Collins, Manager, Engineering Operations, by delegation of Program Management responsibility to Mr. D. E. Glum, Manager, Control Systems Section. The assignment of achieving the objectives of the program as Project Supervisor was made to Mr. J. E. Dever.

TABLE OF CONTENTS

		PAGE
I.	INTRODUCTION	1
II.	SUMMARY	1
III.	DESIGN	2
	A. DESCRIPTION OF ACTUATOR OPERATION	3
	B. COMPONENT DESIGN	5
	1. Potentiometer	5
	2. Servo Valve Mounting	6
	3. Piston-Ball Screw Assembly	6
	4. Thrust Bearings	7
	5. Power Screw and Nut	8
	6. Self-Locking Feature	9
	C. DESIGN ANALYSIS	9
IV.	FABRICATION	11
	A. FABRICATION OF COMPONENT PARTS	11
	B. ASSEMBLY	11
V.	TESTING	12
VI.	CONCLUSIONS AND RECOMMENDATIONS	15

APPENDICES

A. Design Analysis

B. Assembly Procedures

C. Basic Parts List

D. Wyle Lab Test Report

List of Tables

		PAGE
I.	Design Requirements	10

List of Figures

1.	Drawing 1162200	4
2.	Main Component Parts of Self-Locking Actuator	13
3.	Self-Locking Actuator	14

I. INTRODUCTION

This is the final report on the Aerojet Liquid Rocket Company's work under NASA Contract No. NAS 8-28247 for the design, fabrication, testing and delivery of a prototype self-locking actuator.

The original design concept for a self-locking actuator was conceived by ALRC in 1969[1]. During 1970 the concept was reduced to practice in the form of a working model which was designed, fabricated and tested as part of a company-sponsored development program.

In 1971 NASA expressed an interest in the concept and requested a proposal on an actuator capable of producing an axial force of 44.5 kN. A nine month program, later extended to twelve months, for production of a 44.5 kN (10,000 lbf) actuator was awarded to ALRC in February of 1972.

II. SUMMARY

Work was initiated on the Self-Locking Actuator program in February 1972 with the objective of designing, fabricating, testing and delivering an actuator to NASA, MSFC by the latter part of October, 1972. The design phase was completed in early May on schedule and within budget.

During the fabrication phase an unavoidable delay was incurred due to a longer delivery time for the ball screw and nut assembly than was anticipated in the original proposal. This delay slipped the original ALRC delivery date from October to 19 January 1973. The budget remained unchanged.

Assembly of the actuator was initiated in December. At that time a problem was uncovered which became apparent after receipt of the ball screw, i.e., the ball screw seal design would cause the ball return races to be subjected

[1] Patent Application in process - AGC Docket No. 1617

to full pressure differential, this could have caused buckling and jamming of the nut. To eliminate this problem the piston, retainer and ball screw nut were reworked to allow installation of the seal on the opposite end of the ball screw nut. To compensate for the cost impact of the rework, the scope of the testing program was redefined.

On January 11, 1973 the test program was initiated. The actuator passed the initial proof test successfully, however, when the no-load rate test was attempted, the actuator would not extend from the fully contracted position. After several attempts the test was discontinued. Investigative, failure analysis type testing was beyond the scope of the testing planned and would have involved costs beyond the funding available. At this point NASA, MSFC was informed of the test results and a disposition requested.

If further testing is considered the following potential problem areas should be investigated: excessive servo valve leakage; excessive actuator piston leakage; a combination of low servo valve flow and high piston leakage and/or binding or high friction within the actuator.

III. DESIGN

The design effort on the self-locking actuator was initiated in the latter part of February 1972. In March an ALRC Design Review Board, chaired by Mr. K. R. Collins, reviewed and approved the conceptual design layout and gave the go ahead on preparation of detail drawings. On May 10, 1972 ALRC presented the design to NASA, MSFC for review and received approval to proceed with the fabrication phase of the program.

In June 1972, as a result of meetings with the fabrication subcontractor, changes were proposed to the design and approval for said changes verbally received from NASA on 16 June 1972.

During assembly of the actuator in December a problem with the ball screw seal location was discovered. If the seal had been installed as originally designed high pressure acting across the ball screw ball return race would have distorted the races and jammed the balls. By moving the seal to the other end of the ball screw nut the pressure was equalized across the ball return race and the problem eliminated. This change was incorporated and is shown on the "A" change to 1162200.

The final actuator design configuration is shown in Figure 1 and is described below:

A. DESCRIPTION OF ACTUATOR OPERATION

The actuator's prime mover is a 132.59 mm (5.220 inch) O.D. piston (attached to the nut of a ball screw) which moves axially along the ball screw. Normally actuation fluid is pressurized equally on both sides of the piston by an underlapped servo valve through ports integral to the actuator. When motion is required, the servo valve is actuated to vent one side of the piston while retaining full pressure on the other side. The resultant pressure differential creates a force in the direction of the reduced pressure. This force moves the piston - ball screw nut assembly axially along the cylindrical actuator housing. As the piston-nut assembly moves it forces the ball screw to rotate. The ball screw is restrained from moving axially by a set of roller thrust bearings at the left end of the actuator and the piston is keyed to the housing to prevent rotation.

As the ball screw rotates it turns the power screw nut attached to the left end of the ball screw. This nut drives the power screw in or out thus changing the actuator length.

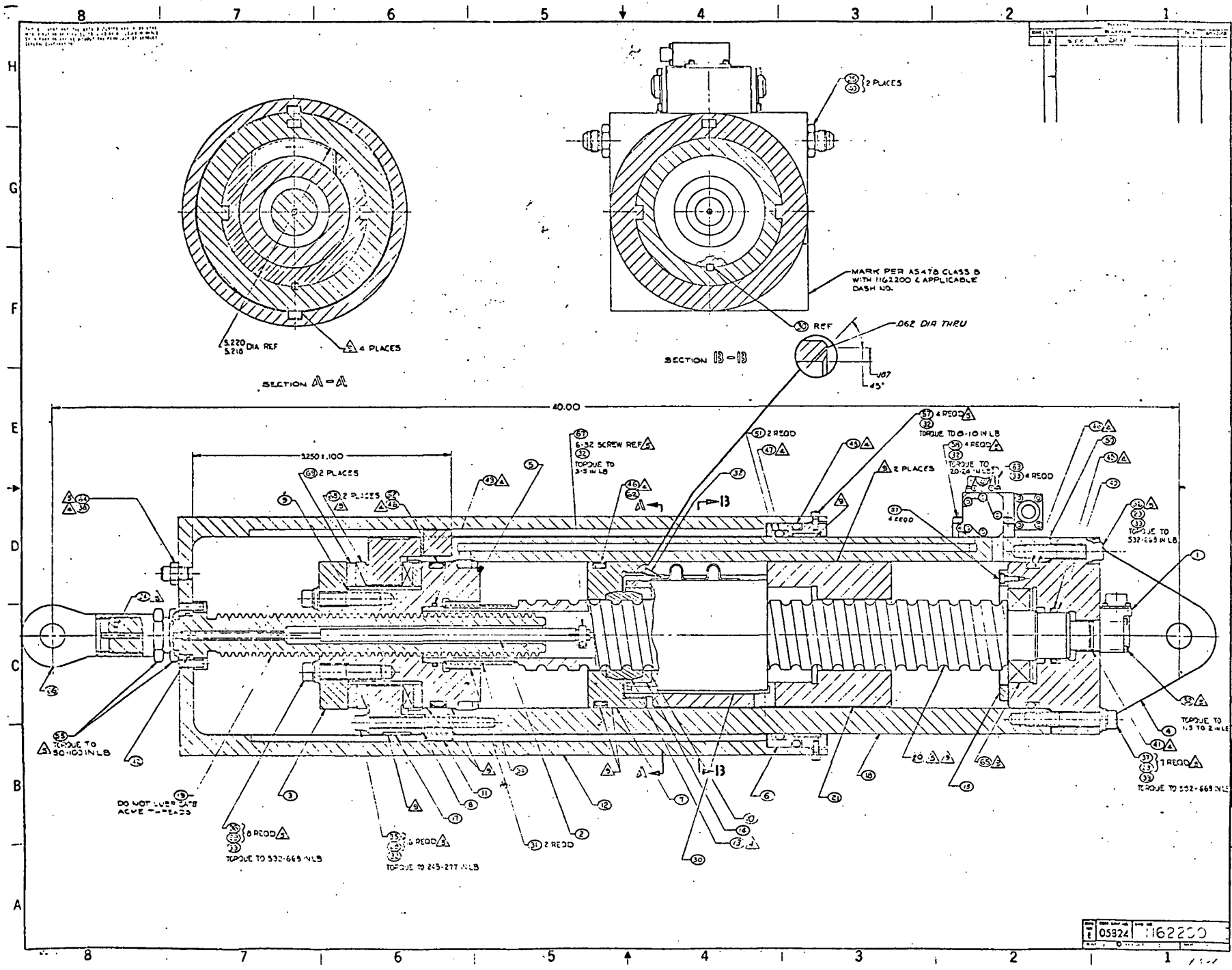

FIG. 1 ACTUATOR X-SECT

To recap the motions of the moving parts (in relation to the stationary actuator housing): the piston moves axially, the ball screw rotates, the power screw nut rotates and the power screw moves axially.

When the desired actuator length has been reached the servo valve is returned to its null position and pressure is equalized across the piston. This eliminates the force acting on the piston and friction between the power screw nut and the power screw creates a braking action that stops the actuator. This same friction automatically locks the actuator and prevents changes in the actuator length due to externally applied forces. The actuator will remain in the locked position until a differential pressure is again applied across the piston.

B. COMPONENT DESIGN

1. Potentiometer

By utilizing a clevis and rod-end design for attaching the stationary end of the actuator it was possible to mount the customer supplied potentiometer internal to the actuator. This clevis has the same spacing and bolt hole size as the clevises currently used by NASA in their actuator test bed at MSFC.

To reduce the length of the actuator (and thereby the material and machining costs) the end of the potentiometer shaft was modified by cutting the shaft off behind the existing shoulder. The modified potentiometer shaft is clamped to an extension rod by means of a commercial product clamp which is drawn down onto a slotted cylindrical section of the potentiometer extension shaft. The extension shaft extends through the power screw and is held by a set screw in the end of the power screw. This arrangement allows for null adjustment of the potentiometer after the actuator has been assembled.

2. Servo Valve Mounting

All porting to and from the servo valve has been integrated into the stationary end of the actuator. The supply and return ports consist of intersecting drilled holes and utilize standard AN fittings for attachment of the supply and return lines. The supply and return line sizes were selected to match the ports in the servo valve.

The two cylinder ports were fabricated as follows: Two 19.05 mm (.75 inch) wide grooves were machined along one side of the square stock billet. Then 25.4 mm (1.0 inch) wide grooves were machined along the tops of the two smaller grooves to produce a 3.175 mm (.125 inch) wide ledge all around the top of the 19.05 mm (.75 inch) groove at a distance of 6.35 mm (.25 inch) from the bottom of the 19.05 mm (.175 inch) groove. Two holes, one in each groove, were drilled to a depth sufficient to insure intersection with the bore which was machined later. Strips, approximately 3.175 mm (.125 inch) thick by 25.4 mm (1.0 inch) wide and long enough to overlap the ends of the grooves, were fitted into the 25.4 mm (1.0 inch) grooves and welded to the billet along all four edges. The bore and outer diameter of the actuator housing were then machined. The servo valve mounting area was milled to provide a smooth mounting surface and holes matching the cylinder ports on the servo valve, were drilled through the strips.

3. Piston-Ball Screw Assembly

The size and design of the piston was dictated by the ball screw and nut assembly. Since cost was a major factor, selection of a ball screw configuration was limited to those commercially available. The ball screw selected for this application has a 63.5 mm (2.5 inch) outer diameter, a 53.57 mm (2.109 inch) thread root diameter, a 19.05 mm (.75 inch) thread lead and a static load capacity of 320.445 kN (72,040 lbf).

The ball screw thread is sealed by a "teflon" (FEP) seal, encapsulated between the end of the ball nut and the piston, which has a single thread (one pitch long) fabricated to mate closely with the semi-circular thread of the ball screw.

The actuator piston is threaded onto the end of the ball screw nut retainer and lockwired to the nut. The piston seal is a standard O-ring with a "teflon" slipper seal installed over its O.D.

The ball screw nut retainer has a circular outer diameter except for two rectangular slots cut along the axis at points 180° apart. These slots fit over keys attached to the inner diameter of the cylinder and prevent rotation of the piston. The ball screw nut is keyed to the retainer in a similar fashion. The piston and seal retainer were fabricated from leaded bronze to reduce frictional drag and prevent galling of the sliding surfaces.

4. Thrust Bearings

Two high capacity commercial product roller thrust bearings are provided to counteract the axial thrust created by the externally applied loads and pressure loading the piston. The thrust loads during extension are transmitted to the bearings by the power screw nut through the hardened race between the nut and the bearing. During contraction the thrust loads are transmitted to the bearings by the retainer attached to the ball screw nut. The bearings, in turn transmit the axial thrust loads to the end of the stationary cylinder by means of the end-cap. All surfaces contacting the bearings are case hardened to a Rockwell hardness of Rc 58 min. to reduce wear and fretting.

5. Power Screw and Nut

The ratio between the ball screw lead and the power screw lead affects several important parameters in the design of the actuator, i.e., efficiency, length (and cost), output force, cycle life and shaft speed. Since the ball screw lead was fixed by what is commercially available the selection of the power screw lead resulted from the best compromise between these various parameters. The most efficient actuator results when the ball screw lead to power screw lead ratio (hereafter called the lead ratio) is high, i.e., a small power screw lead. This however results in a longer piston stroke which in turn increases the actuator length. The longer piston stroke results in a larger volume of fluid to be supplied per unit time which in turn, slows the shaft speed for a given servo valve capacity. A smaller power shaft lead also requires the nut to rotate faster for a given shaft speed. This faster rotation adversely affects the life of the thrust bearings. The actuator output force also increases as the power screw lead is reduced because of the increased mechanical advantage. Since the piston size is dictated by the size of the ball screw and cannot be reduced this would result in an extremely high output force.

A smaller lead ratio (longer power screw lead), on the other hand, decreases the piston stroke, increases the shaft speed for a given servo valve capacity, lowers the thrust bearing speeds and results in a shorter actuator length. The adverse effects of a smaller lead ratio are: lower actuator efficiency, larger piston diameter (i.e., actuator O.D. increases), higher Acme thread bearing stress, higher axial thrust loads and higher torque reaction forces. In addition, the length of the power screw lead is also restricted by the coefficient of friction between the screw and nut

materials with respect to the self-locking aspect of the actuator. This will be discussed in more detail in the next section.

The choice of the power screw lead results in a compromise between the parameters discussed above. The power screw dimensions selected for the actuator are: 19.05 mm (.75 inch) lead, 6.35 mm (.25 inch) pitch and 38.1 mm (1.50 inch) pitch diameter. This resulted in a lead ratio of 1.0 which was considered to be as close to optimum as practical.

6. Self-Locking Feature

Self-locking is controlled by the dimensions of the power screw thread and the coefficient of friction between the power nut and screw. As long as the tangent of the lead angle is less than the coefficient of friction the screw will be self-locking. Materials selected for the nut and screw are leaded commercial bronze and 17-4 PH alloy steel respectively. This combination has a reported[2] dry static friction coefficient of 0.22. The actuation fluid has been purposely sealed off from the Acme threads to prevent the lubricity properties of the fluids affecting the frictional characteristics of the thread.

C. DESIGN ANALYSIS

The design analysis completed as part of the program is included as Appendix A. Table I lists the design requirements set forth in the work statement. As shown in the design analysis and Figure 1 all design requirements have been met. The theoretical results of the analysis are listed in Table I where applicable. All calculations were done in the English unit system then converted into SI units.

---

[2] Howell, G.W., Weathers, T.M. (editors): Aerospace Fluid Component Designer's Handbook, TRW Systems Group, RPL-TDR-64-25, Revision C, Vol. II, Table 12.7, p 12.7-2

TABLE I

DESIGN REQUIREMENT	VALUE SPECIFIED IN WORK STATEMENT		CALCULATED OR SPECIFIED	
	English	SI	English	SI
1. Length	40.00 in	1.016 mm	40.00 in.	1.016 m
2. Stroke	± 3.82 in.	± 97 mm	± 3.82 in.	± 97 mm
3. Operating pressure				
Supply	3,000 psig	20.68 MN/m^2	3,000 psig	20.68 MN/m^2
Return	50 psig	.34 MN/m^2	50 psig	.34 MN/m^2
4. Proof pressure	4,500 psig	31.03 MN/m^2	S.F. = .29 @ 4500 psig	31.03 MN/m^2
5. Burst pressure	6,000 psig	41.37 MN/m^2	6,000 psig	41.37 MN/m^2
6. No-load velocity	10.0 in/sec Max.	254 mm/sec Max.	3.8 in/sec	96.5 mm/sec
7. Stall force	10,000 lbf	44.48 kN	9600 to 11,250 lbf	42.70 to 50.04 kN
8. Operating fluid	Hydraulic oil per MIL-Q-5606 or pneumatic fluid		Hydraulic oil per MIL-H-5606	

IV. FABRICATION

Fabrication of the components was performed by a subcontractor, the Associated Machine Company of Santa Clara, California to working drawings prepared and released by ALRC.

A. FABRICATION OF COMPONENT PARTS

Significant variations to the original design concept that were originated during fabrication included:

1. Fabrication of the outer sleeve as a three part (sleeve and two T-bars) assembly. This change was made to accommodate the vendors tooling in making the keyways in the sleeve.

2. Changing the keying arrangement between the cylinder bore and the ball screw nut retainer. This also was to accommodate vendor tooling and machinery available.

3. The ball screw thread seal was supposed to be molded onto the ball screw, however, due to delivery problems the seal was machined.

4. The retainer to ball screw nut interface was modified to accommodate the actual ball screw nut configuration which was not known until delivery of the ball screw-nut assembly to The Associated Machine Company.

Due primarily to an unavoidable delay in the delivery of the ball screw and nut assembly to Associated Machine by the Saginaw Steering Gear Division of General Motors a two and a half month slip occurred changing the original delivery date of 25 October 1972 to 19 January 1973.

B. ASSEMBLY

Assembly of the actuator was started during December 1972 and completed in early January 1973. Assembly was per the assembly procedures given in Appendix B and all components used in the assembly are listed on the basic

parts list given in Appendix C. Figure 2 shows the main component parts prior to assembly and Figure 3 is the fully assembled actuator.

It was discovered during final assembly that the ball screw seal can, when the actuator is fully extended, protrude past the end of the ball screw thread. This results in the semi-circular thread part of the seal engaging the ball screw for approximately one-half of a thread rather than for a full thread as designed. This could be eliminated by reworking the ball screw nut retainer, the piston and inserting a shim between the seal and the piston. At the time this condition was discovered the assembly was considered too far along to make the change. The problem that arises from this reduction in seal thread engagement is that the seal leakage at the fully extended actuator position could increase to the point where the actuator would not retract. To overcome this problem it is proposed that the extension be limited to +3.32 (measured from the null position).

V. TESTING

Testing of the actuator was conducted at Wyle Labs in El Segundo, California. Wyle's report is included as Appendix D. To ascertain that the actuator would meet the design requirements, three tests were specified, i.e., a proof test, a no load rate test and a leakage test. The proof test consisted of pressurizing the actuator on both sides of the piston simultaneously to 31.03 MN/m^2 (4500 psig). There was no sign of distortion or external leakage during the two minutes that the pressure was applied.

Problems arose, however, during the no-load rate test. When 12 mA was applied to the servo valve with an inlet pressure of 20.68 MN/m^2 (3000 psig) the actuator did not move from the fully contracted position (Note: This was not due to the problem discussed in Section IV.B). Several attempts were made

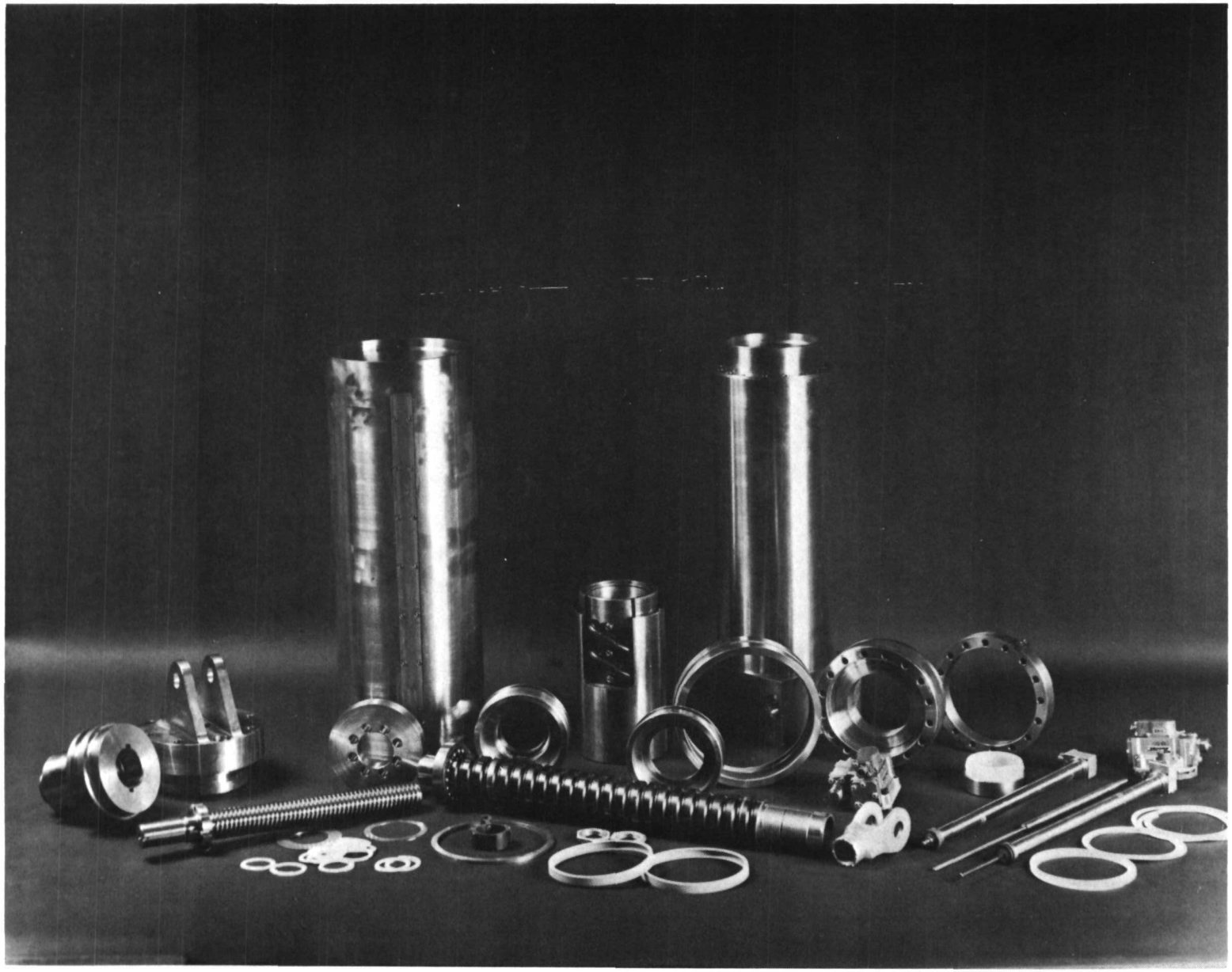

FIGURE 2. MAIN COMPONENT PARTS OF SELF-LOCKING ACTUATOR

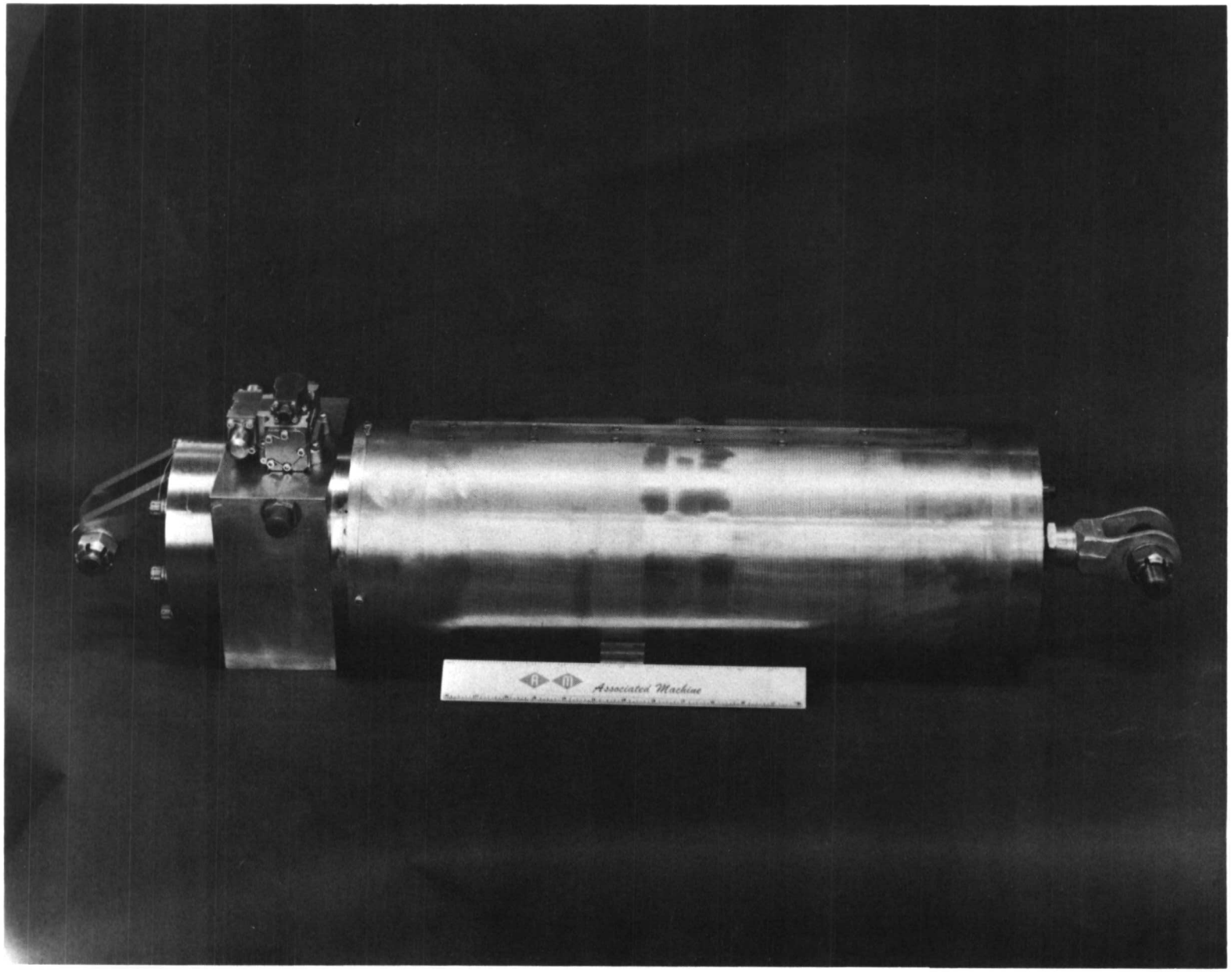

FIGURE 3. SELF-LOCKING ACTUATOR

to determine why the actuator would not move but because of the test set-up and the absence of test ports it was not possible to isolate the problem. It was determined, however, that the leakage out of the return port was much larger than anticipated. It was so great, in fact, that the measurement method of leakage volume per unit time selected could not be used.

Due to the lack of test ports it could not be determined where the leakage was occurring, i.e., through the ball screw seal, the piston seal and/or the servo valve. The test was attempted several times in both directions and discontinued when the budgeted test time was expended. NASA, MSFC was notified of the condition on 12 January 1973 and final disposition requested.

VI. CONCLUSIONS AND RECOMMENDATIONS

Due to the limited testing budgeted as part of this program no definitive conclusions can be reached as to the reason the Self-Locking Actuator failed to actuate. Theoretically there is sufficient force available to overcome a 44.5 kN (10,000 lbf) load. Testing appears to show otherwise. The reasons for this discrepancy can only be speculated upon at this time. The following recommendations include ways of isolating the cause(s) for non-movement and on changes to facilitate testing:

1. Replace servo valve with a test block with porting directly to the cylinder ports.

2. Measure flow into and out of the actuator. If actuator is not moving the resultant flow will be leakage through the ball screw seal and/or the piston seal.

3. If the leakage is due to the ball screw seal then a separate seal development program is recommended.

4. If leakage is minimal (say 10% to 20% of total flow capability) then testing should be conducted at the sub-assembly level to verify theoretical values for ball screw torque output, friction, key reaction forces.

5. Testing would be facilitated if the following changes were made:

a. Move the ball screw seal approximately 1.27 mm (.50 inch) to the right of its present location by reworking the ball screw nut retainer and the piston and by inserting a shim between the seal and the piston. This change will eliminate the possibility of additional leakage at the end of the extension stroke. (It may be necessary to also install a static seal between the shim and piston and between the shim and the ball screw seal).

b. Add test ports to the housing so that cylinder pressures can be monitored during testing.

c. Modify the end of the ball screw next to the potentiometer to allow for attachment of a torque wrench (with the potentiometer removed) to measure torque required to move the shaft with and without pressure loading.

APPENDIX A

SELF-LOCKING ACTUATOR DESIGN ANALYSIS

AGCS-0800-11	REPORT NO.	PAGE 1 OF
SUBJECT		DATE 3/6/72
		WORK ORDER
BY J. E. Dever	CHK. BY	DATE

Ball Screw & Nut Assy

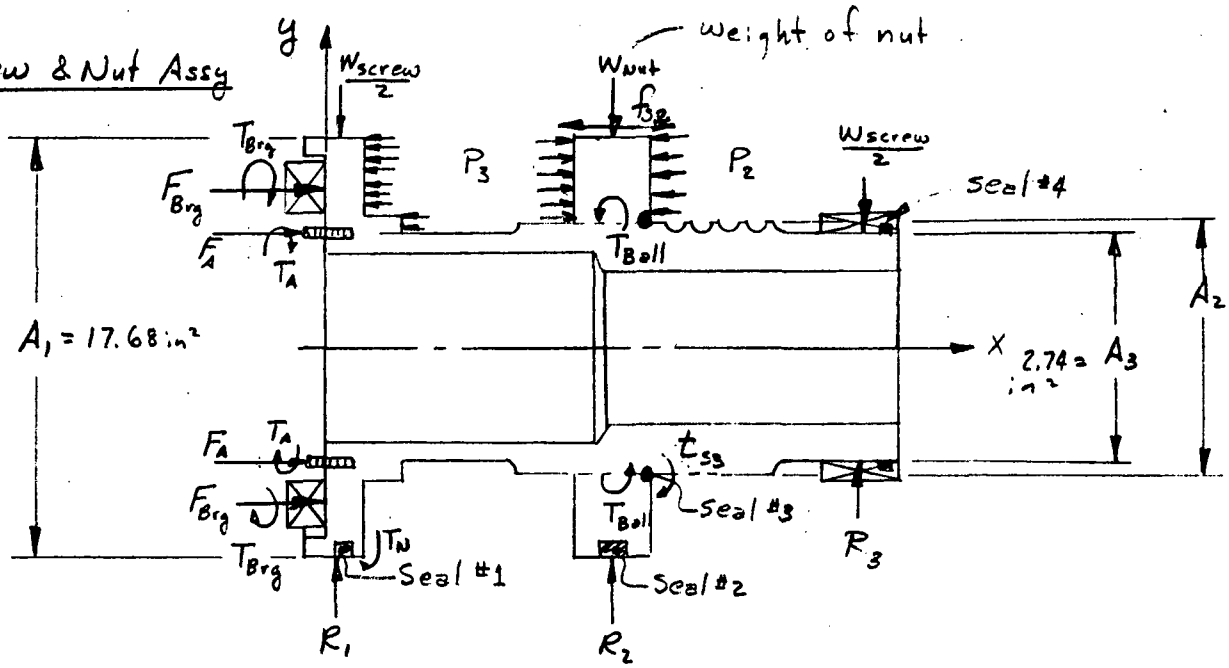

Extension (Against Load)

$$\overset{+}{\rightarrow}\sum F_x = F_{Brg} - (P_2 - P_3)(A_1 - A_3) + f_{s_2} + F_A + f_{key}$$

$$\therefore F_{Brg} = (P_2 - P_3)(A_1 - A_3) - (F_A + f_{s_2} + f_{key})$$

$$+\uparrow\sum F_y = (R_1 + R_2 + R_3) - (W_{screw} + W_{Nut}) = 0$$

$$\therefore R_1 + R_2 + R_3 = W_{screw} + W_{Nut}$$

$$+\circlearrowleft\sum M_{x\text{-}x} = T_A + T_{Brg} - T_{Ball} + (t_{s_1} + t_{s_3} + t_{s_4}) + T_N$$

$$\therefore T_{Ball} = T_A + T_{Brg} + (t_{s_1} + t_{s_3} + t_{s_4}) + T_N \quad \ldots\ldots\ldots (1)$$

Ball Screw & Nut Assy (cont)

Contraction: (with Load, assist.)

$$\overset{+}{\rightarrow}\sum F_x = -F_{Brg} + (P_3 - P_2)(A_1 - A_2) - f_{s_2} + F_A - f_{key}$$

$$\therefore F_{Brg} = f_{key} - F_A + f_{s_2} - (P_3 - P_2)(A_1 - A_2)$$

$$+\uparrow\sum F_y = (R_1 + R_2 + R_3) - (W_{screw} + W_{Nut}) = 0$$

$$R_1 + R_2 + R_3 = W_{screw} + W_{Nut}$$

$$+\circlearrowleft \sum M_{x-x} = +T_A - T_{Brg} - t_{s_1} - t_{s_3} - t_{s_4} - T_{Ball} - T_N$$

$$\therefore T_{Ball} = T_A + T_{Brg} + (t_{s_1} + t_{s_3} + t_{s_4}) + T_N \quad \ldots\ldots\ldots (2)$$

Using the values for F_{Brg} & T_{Ball} from Eq's (1) we have:

$$F_{Brg} = (P_2 - P_3)(A_1 - A_3) - (F_A + f_{s_1} + f_k)$$

$$T_{Ball} = T_A + T_{Brg} + (t_{s_1} + t_{s_3} + t_{s_4})$$

but

$$T_{Ball} = \frac{(P_2 - P_3)(A_1 - A_3)\, l_B\, e_2}{2\pi} \quad \ldots\ldots\ldots\ldots\ldots (3)$$

(Pg 18, Engr. Design Guide - Saginaw Steering Gear Div. 9th Ed.)

and

$$T_A = \frac{F d_A}{2}\left[\frac{\tan\alpha + \mu \sec\beta}{1 - \mu \tan\alpha \sec\beta}\right] \quad \ldots\ldots\ldots\ldots (4)$$

(Maleev and Hartman 'Machine Design', International Text-Book Co, 3rd Ed., pp 252 & 383)

Ball Screw & Nut Assy (cont.)

$$T_{Brg} = \mu_{Brg} F_{Brg} \bar{r}_{Brg}$$

$$t_{s_1} = \mu_s F_{s_1} r_{s_1}$$

$$t_{s_3} = \mu_s F_{s_3} r_{s_3}$$

$$t_{s_4} = \mu_s F_{s_4} r_4$$

$$\therefore \frac{(P_2 - P_3)(A_1 - A_3)\, l_B e_2}{2\pi} = \frac{F_A d_A}{2}\left[\frac{\tan\alpha + \mu \sec\beta}{1 - \mu \tan\alpha \sec\beta}\right] + \mu_{Brg} F_{Brg} \bar{r}_{Brg} + R_1 \mu_A \frac{D_1}{2} + \mu_s (F_{s_1} r_{s_1} + F_{s_3} r_{s_3} + F_{s_4} r_{s_4})$$

$$= \frac{F_A d_A}{2}\left[\frac{\tan\alpha + \mu \sec\beta}{1 - \mu \tan\alpha \sec\beta}\right] + \mu_{Brg} \bar{r}_{Brg}\left[+(P_2 - P_3)(A_1 - A_3) - (F_A + f_{s_2} + f_k)\right] + \mu_s (F_{s_1} r_{s_1} + F_{s_3} r_{s_3} + F_{s_4} r_{s_4}) + R_1 \mu_A \frac{D_1}{2} \quad \ldots (5)$$

Expanding and solving for the stall load (F_A) gives, for expansion

$$F_A = \frac{(P_2 - P_3)(A_1 - A_3)\left(\frac{l_B e_2}{2\pi} - \mu_{Brg} r_{Brg}\right) + (f_{s_2} + f_k)\mu_{Brg} r_{Brg} - \mu_s (F_{s_1} r_{s_1} + F_{s_3} r_{s_3} + F_{s_4} r_{s_4}) - R_1 \mu_A D_1/2}{\frac{d_A}{2}\left(\frac{\tan\alpha + \mu \sec\beta}{1 - \mu \tan\alpha \sec\beta}\right) - \mu_{Brg} \bar{r}_{Brg}} \quad \ldots (6)$$

for contraction

$$F_A = \frac{(P_2 - P_3)(A_1 - A_3)\left(\frac{l_B e_2}{2\pi} + \mu_{Brg} r_{Brg}\right) - (f_{s_2} + f_k)\mu_{Brg} r_{Brg} + \mu_s (F_{s_1} r_{s_1} + F_{s_3} r_{s_3} + F_{s_4} r_{s_4}) + R_1 \mu_A D_1/2}{\frac{d_A}{2}\left(\frac{\tan\alpha + \mu \sec\beta}{1 - \mu \tan\alpha \sec\beta}\right) + \mu_{Brg} \bar{r}_{Brg}} \quad \ldots\ldots (7)$$

Shaft Speed - Hydraulic Oil

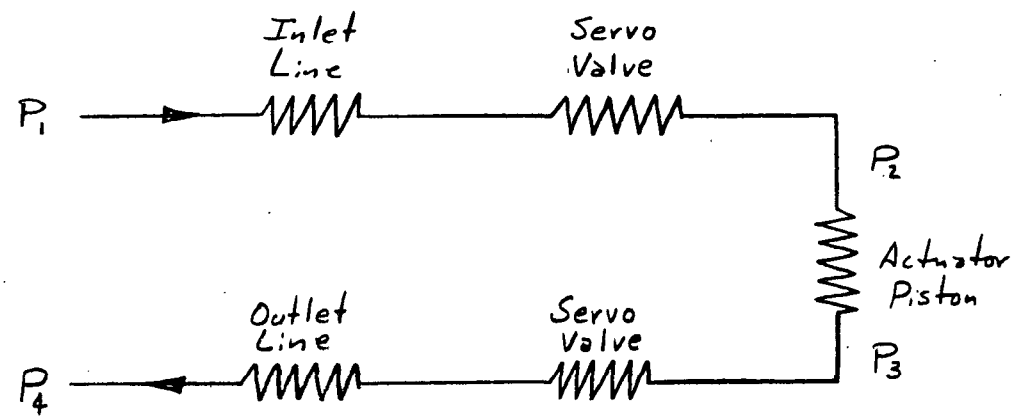

Pressure Required to move Actuator: (No load)

$$T_{BALL} = T_{SCREW} + T_{BRG} + T_{SEAL} + T_{FRICT}$$

where

$$T_{Ball} = \frac{(P_2 - P_3)(A_1 - A_3)\, l_B\, e_2}{2\pi}$$

$$T_{SCREW} = \frac{F_{Slve}\, D_A}{2}\left[\frac{\tan\alpha + \mu \sec\beta}{1 - \mu_A \tan\alpha \sec\beta}\right] \quad \text{(extension against force)}$$

$$= \frac{F_{Slve}\, D_A}{2}\left[\frac{\mu_A \sec\beta - \tan\alpha}{1 + \mu_A \tan\alpha \sec\beta}\right] \quad \text{(contraction with force)}$$

$$T_{Brg} = (T_{Brg})_{press} - (T_{Brg})_{seal\,\#2} - (T_{Brg})_{Sq.\,Nut}$$

$$(T_{Brg})_{press} = \left[(P_2 - P_3)(A_1 - A_3) - F_{Slve}\right]\mu_{Brg}\,\bar{r}_{Brg}$$

$$(T_{Brg})_{seal\,\#2} = F_{S2}\,\mu_{Brg}\,\bar{r}_{Brg}$$

$$(T_{Brg})_{Sq\,Nut} = \frac{2\mu_A T_{Ball}}{r_{nut}}\,\mu_{Brg}\,\bar{r}_{Brg}$$

Shaft Speed - Hydraulic Oil (cont.)

$$T_{Seal} = \left(\sum F_{compression}\,\bar{r}_{Seal} + \sum F_{press}\,\bar{r}_{Seal}\right)\mu_{Brg}\,r_{Brg}$$

$$T_{Frict} = (T_{Frict})_{\substack{Acme\\Nut}} = (W_{Ball\ Assy})\,\mu_A\,r_{s_1}$$

$\therefore$

$$T_{BALL} = T_{screw} + (T_{Brg})_{press} + (T_{Brg})_{s_2} + (T_{Brg})_{sq\,Nut} + (T_{seal})_c + (T_{seal})_{press} + T_{Frict}$$

$$T_{Ball} - (T_{Brg})_{press} - (T_{Brg})_{s2\,press} - (T_{Brg})_{sq.\,Nut} - (T_{seal})_{press} = T_{screw} + (T_{Brg})_{s_2c} + (T_{seal})_c + T_{Fr.}$$

$$\left(1 - \frac{2\mu_A\mu_{Brg}\bar{r}_{Brg}}{\bar{r}_{Nut}}\right)\left[\frac{(P_2-P_3)(A_1-A_3)\,l_B\,e_2}{2\pi}\right] - \left[(P_2-P_3)(A_1-A_3) - \cancel{F_{slve}}\right]\mu_{Brg}\bar{r}_{Brg} - C_1 A_{s_2}\mu_{Brg}\bar{r}_{Brg}$$

$$-\left(C_1\sum_{i=1,3,4} A_i\right)\mu_{Brg}\bar{r}_{Brg} = T_{screw} + (T_{Brg})_{s_2c} + (T_{seal})_c + T_{Frict.} - F_{slve}\mu_{Brg}\bar{r}_{Brg}$$

where

$$C_1 = f(P_2-P_3)\ ,\ \text{say}\ k_i(P_2-P_3)$$

$$\therefore (P_2-P_3)\left\{\frac{(A_1-A_3)\,l_B\,e_2}{2\pi}\left(1 - \frac{2\mu_A\mu_{Brg}\bar{r}_{Brg}}{\bar{r}_{Nut}}\right) - \left[(A_1-A_3) + K_i\left(A_{s_2} + \sum_{i=1,3,4} A_i\right)\right]\mu_{Brg}\bar{r}_{Brg}\right\}$$

$$= T_{screw} + (T_{Brg})_{s_2c} + (T_{seal})_c + T_{Frict} - F_{slve}\mu_{Brg}\bar{r}_{Brg}$$

and

$$(P_2-P_3) = \frac{T_{screw} + (T_{Brg})_{s2c} + (T_{seal})_c + T_{Frict} - F_{slve}\mu_{Brg}\bar{r}_{Brg}}{\left\{\frac{(A_1-A_3)\,l_B\,e_2}{2\pi}\left(1 - \frac{2\mu_A\mu_{Brg}\bar{r}_{Brg}}{\bar{r}_{Nut}}\right) - \left[(A_1-A_3) + k_i\left(A_{s_2} + \sum_{i=1,3,4} A_i\right)\right]\mu_{Brg}\bar{r}_{Brg}\right\}}$$

Since k_i is a function of (P_2-P_3) we must use a trial and error type solution if an exact solution is required.

Shaft Speed - Hydraulic Oil (cont.)

The flow rate equation for the servo valve (per Bill Swords, dtd 4-5-72) is

$$Q = 70\sqrt{1-\frac{\Delta P}{P_s}}\left(\frac{I}{I_{max}}\right) \text{ in}^3/\text{sec}$$

where

Q = volumetric flow rate, in³/sec

ΔP = pressure differential across piston, psid

P_s = supply pressure

I = input amperes

I_{max} = 12 MA by definition

If, for maximum shaft speed purposes, we assume that $I = I_{max}$ then, if we ignore line losses, the flow rate is

$$Q \cong 70\sqrt{1-\frac{(P_2-P_3)}{P_1}}$$

and shaft speed $\dot{x}$, in inches/sec, is

$$\dot{x} = \left[\frac{(Q-Q_L)\ \text{in}^3/\text{sec}}{(A_1-A_3)\ \text{in}^2}\right]$$

Worst case is with no leakage (i.e., $Q_L = 0$)

$$\dot{x}_{max} = \frac{Q}{A_1-A_3} = \frac{Q}{\frac{\pi}{4}(5.277^2-2.109^2)} = \frac{Q}{18.377} = .0544\,Q \text{ in/sec}$$

$$\dot{x}_{max} = 3.809\sqrt{1-\frac{(P_2-P_3)}{P_1}} \text{ in/sec}$$

and the maximum possible shaft speed is $\dot{x} = 3.809$ in/sec.
or $\dot{x} = 96.75$ mm/sec

SUBJECT

DATE 3/9/72

WORK ORDER

BY J.E.D.

CHK. BY

DATE

Shaft Speed - Hydraulic Oil (cont.) - Check negligible line loss assumption

Inlet Line

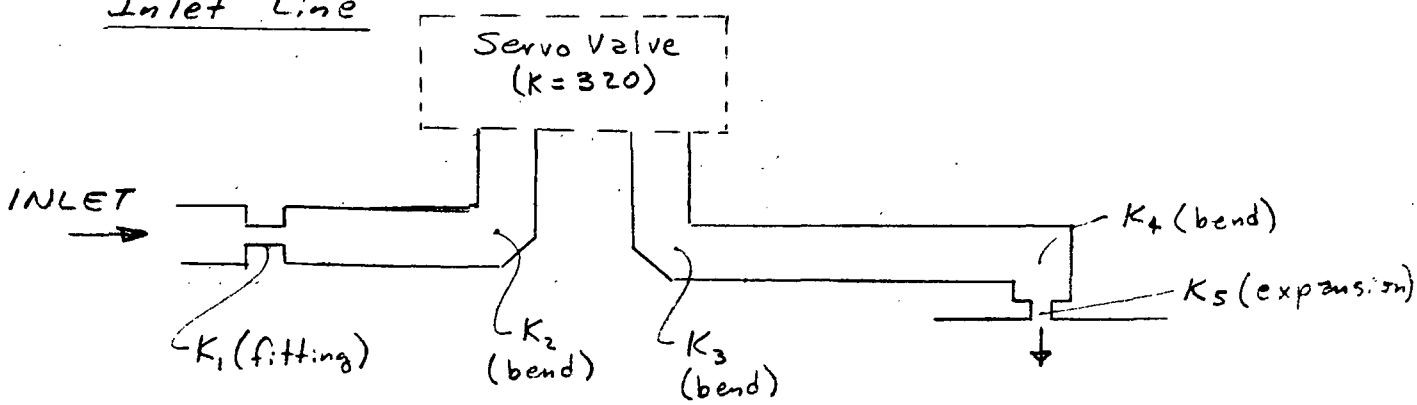

$$K_1 = \frac{1}{C_d^2} = \frac{1}{.4^2} = 6.25$$

$K_2 = 1.1$

$K_3 = 1.1$

$K_4 = 1.5$

$K_5 = 1.0$

$\Sigma K_{L_i} = 10.95$

Assume $\Sigma K_{L_o} = \Sigma K_{L_i} = 11.$

Then the ΔP due to line losses only is:

$$\Delta P_L = \frac{K_L \gamma V^2}{2g} = \frac{(11.0)(.031)}{2(386.4)} V^2$$

$$\Delta P_L = .00044\, V^2$$

Shaft Speed - Hydraulic Oil (cont.)

@ $\dot{X} = 3.81$ in/sec

$$Q = \dot{X} A = \left(3.81 \text{ in/sec}\right)\left(18.377 \text{ in}^2\right) = 70.02 \text{ in}^3/\text{sec}$$

$$V = \frac{Q}{A_L} = \frac{70.02 \text{ in}^3/\text{sec}}{\pi/4\,(.39 \text{ in})^2} = \frac{70.02 \text{ in}^3/\text{sec}}{.1195 \text{ in}^2} = 586.14 \text{ in/sec}$$

$$\therefore \Delta P_L = .00044\,(586.14)^2 = 151.2 \text{ \#/in}^2 \approx 5\% \text{ of } P_s \ (= 3000 \text{ psi})$$

$\therefore$ Assumption O.K.

```
$ONE
B1      =    .47740000E+01,
B2      =    .47740000E+01,
B3      =    .21090000E+01,
B4      =    .13710000E+01,  1.632
COMP1   =    .15100000E+02,
COMP2   =    .15100000E+02,
COMP3   =    .13500000E+02,
COMP4   =    .15000000E+02,
D1      =    .52270000E+01,
D2      =    .52270000E+01,
D3      =    .24[illegible]0000E+01,
D4      =    .16[illegible]0000E+01,  1.992
DA      =    .13750000E+01,
UBRG    =    .50000000E-02,
UA      =    .25000000E+00,
BETA    =    .14500000E+02,
RBRG    =    .21790000E+01,
E2      =    .80000000E+00,
$END
$TWO
PITCHA  =    .75000000E+00,
PITCHB  =    .75000000E+00,
RKEY    =    .11000000E+01,
$END
```

<<<<<< EXTENSION - AGAINST LOAD >>>>>>

ENGLISH UNITS

DELTA P PSID	STALL LOAD POUNDS	BRG LOAD POUNDS	TBALL IN-LB	TFRCT IN-LB	TBRG IN-LB	TSCREW IN-LB	SHAFT SPD IN/SEC
500.0000	1531.6718	6993.1055	814.0570	320.8279	76.1899	414.8942	3.4771
1000.0000	3308.2708	13770.7515	1630.9279	500.0134	150.0323	979.1595	3.1100
1500.0000	5084.8697	20548.3977	2447.7988	679.1988	223.8748	1543.4247	2.6934
2000.0000	7067.6235	27138.6450	3266.4608	796.7893	295.6755	2173.1667	2.1991
2500.0000	9144.0840	33643.7109	4085.9369	885.3820	366.5482	2832.6708	1.5550
3000.0000	11276.7686	40097.6685	4905.9015	959.1761	436.8641	3510.0323	.0000

SI UNITS

N/SQ.M	NEWTONS	NEWTONS	N-M	N-M	N-M	N-M	M/SEC
3447376.5625	6813.2155	31106.8823	91.9761	36.2487	8.6083	46.8768	.0883
6894757.1250	14715.9214	61255.3535	184.2701	56.4939	16.9514	110.6302	.0790
10342135.6250	22618.6270	91403.8252	276.5641	76.7392	25.2945	174.3836	.0684
13789514.2500	31438.3550	120718.7051	369.0605	90.0251	33.4068	245.5349	.0559
17236892.7500	40674.9111	149654.6797	461.6489	100.1477	41.4144	320.0488	.0395
20684271.2500	50161.5649	178363.3125	554.2924	108.3724	49.3590	396.5804	.0000

<<<<<< CONTRACTION - AGAINST LOAD >>>>>>

DELTA P PSID	STALL LOAD POUNDS	BRG LOAD POUNDS	TBALL IN-LB	TFRCT IN-LB	TBRG IN-LB	TSCREW IN-LB	SHAFT SPD IN/SEC
500.0000	-100.1282	8624.9055	814.0570	320.8279	93.9683	414.8942	3.4771
1000.0000	1676.4708	15402.5515	1630.9279	500.0134	167.8108	979.1595	3.1100
1500.0000	3453.0697	22180.1978	2447.7988	679.1988	241.6532	1543.4247	2.6934
2000.0000	5435.8235	28770.4448	3266.4608	796.7893	313.4540	2173.1667	2.1991
2500.0000	7512.2841	35275.5112	4085.9369	886.3820	384.3267	2832.6708	1.5550
3000.0000	9644.9686	41729.4683	4905.9015	959.1761	454.6425	3510.0323	.0000

N/SQ.M	NEWTONS	NEWTONS	N-M	N-M	N-M	N-M	M/SEC

34473.3625	-445.3924	38365.4902	91.9761	36.2487	10.6170	46.8768	.08
6894757.1250	7457.3135	68513.9609	184.2701	56.4939	18.9601	110.6302	.0790
10342135.6250	15360.0190	98662.4336	276.5641	76.7392	27.3032	174.3836	.0684
13789514.2500	24179.7471	127977.3125	369.0605	90.0251	35.4155	245.5349	.0559
17236892.7500	33416.3037	156913.2891	461.6489	100.1477	43.4231	320.0488	.0395
20684271.2500	42902.9570	185621.9199	554.2924	108.3724	51.3677	396.5804	.0000

SUBJECT

DATE

WORK ORDER

BY

CHK. BY

DATE

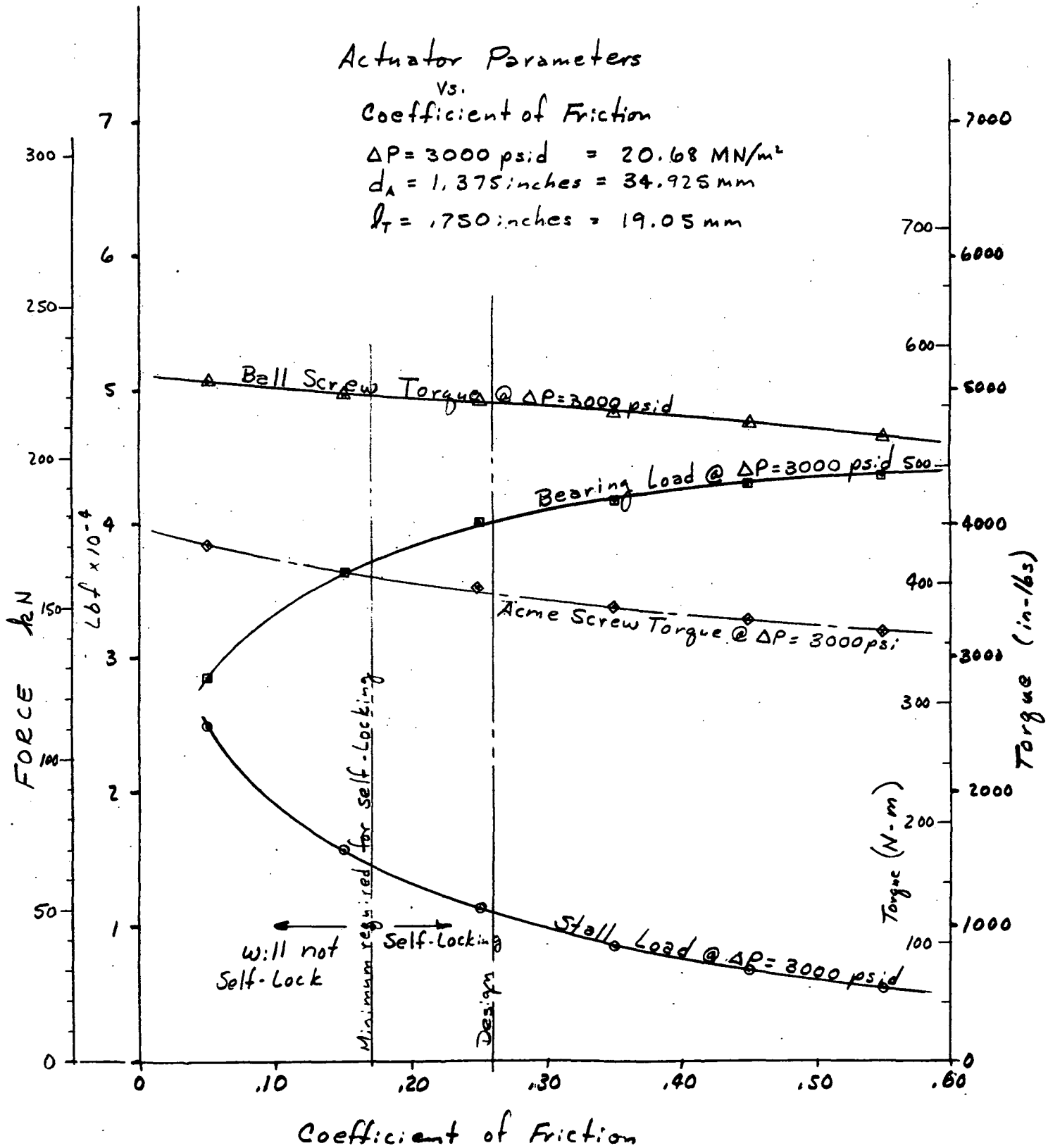

SUBJECT

DATE

WORK ORDER

BY

CHK. BY

DATE

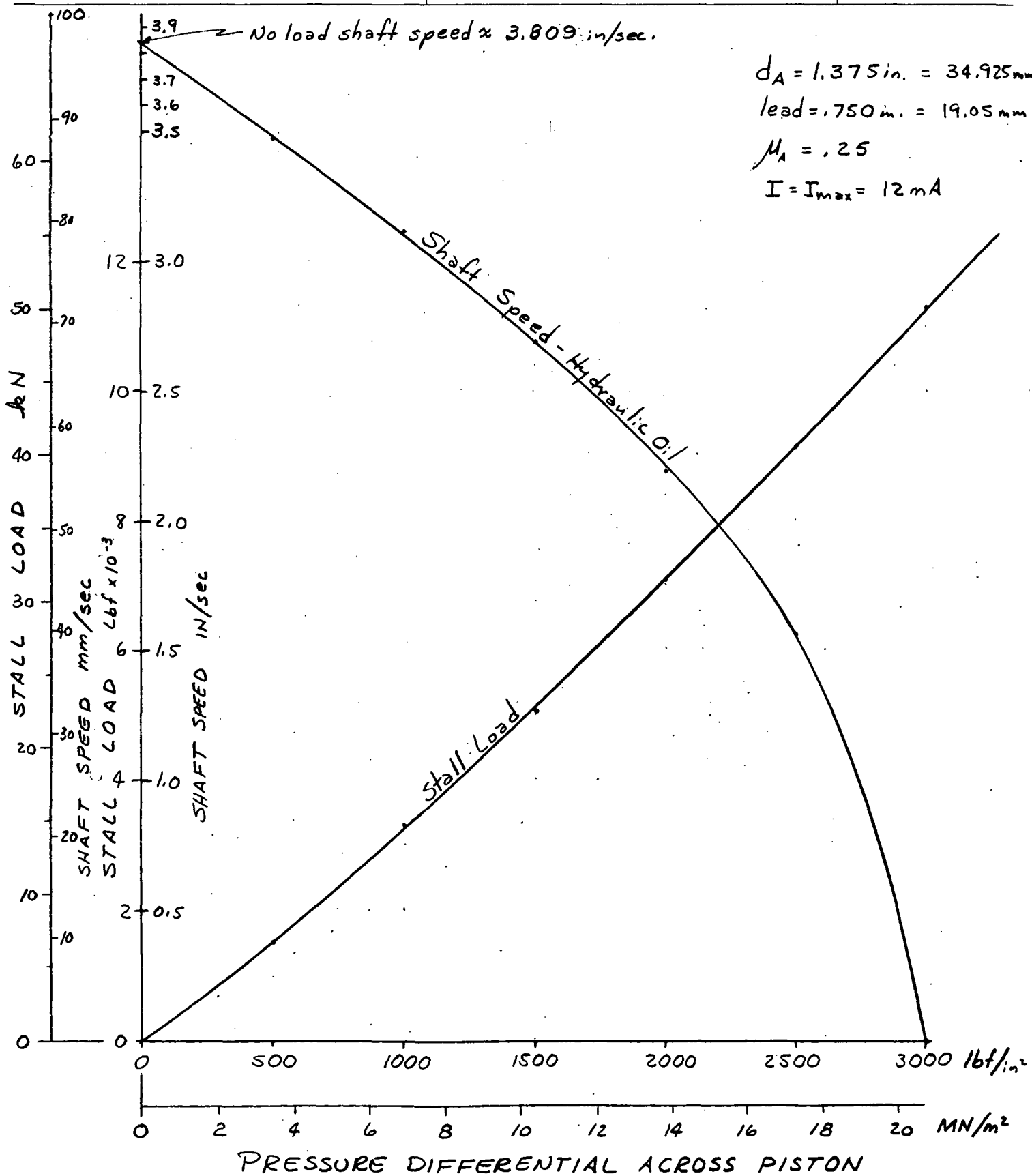

where:

A_1 = Piston area (O.D.)

A_2 = Ball screw seal area (mean dia)

F_A = Acme screw output force (axial)

F_{BRG} = Thrust bearing load (axial)

F_{key} = Frictional force due to torque reaction force on key between cylinder and ball screw nut retainer

f_{S2} = Axial frictional force created by piston seal

P_2 = Pressure applied to "extension" side of piston

P_3 = Pressure applied to "contraction" side of piston

R_1 = Vertical reaction force @ acme nut to cylinder interface.

R_2 = Vertical reaction force @ piston to cylinder interface,

R_3 = Vertical reaction force @ ball screw bearing to end cap interface.

T_A = Torque required to produce output force F_A

T_{BALL} = Torque required to turn ball screw

T_{BRG} = Torque required to overcome thrust bearing drag.

T_N = Torque required to overcome frictional force due to reaction force R_1

t_{S1} = Frictional torque due to acme nut seal (O.D.)

t_{S3} = Frictional torque due to ball screw thread seal.

t_{S4} = Frictional torque due to ball screw to end cap seal (near radial bearing).

W_{screw} = Weight of ball screw

W_{Nut} = Weight of acme nut

Ball Screw Key ($5/16 \times 5/16 \times 1.10$ engagement) ~ 2 Req'd

$$T_{key} = T_{Screw} + T_{Brg} = 3510 \text{ in-lb} + 437 \text{ in-lb} = 3947 \text{ in-lb} \quad (\text{Say } 4000 \text{ in-lb})$$

∴ The shear stress for the key is:

$$\tau_{key} = \frac{T_{key}/2}{w L d} = \frac{4000 \text{ in-lb}/2.}{(.3125 \text{ in})(1.1 \text{ in})(2.125 \text{ in})} = 2738 \ \#/\text{in}^2$$

Cres key

$$\tau_{key} = 1.888 \ MN/m^2$$

$$M.S. = \frac{.6 \times 30{,}000}{2738} - 1 = \underline{\text{Excess}}$$

and the bearing stress is:

$$\sigma_b = \frac{2 T_{key}}{d L \times 2(h - 1/4)} = \frac{2(4000 \text{ in-lb})}{(2.125 \text{ in})(1.10 \text{ in})(.375)} = 9{,}127 \ \#/\text{in}^2$$

Bearing Bronze ASME METAL PROP HNDBK

$$M.S. = \frac{13{,}000}{9{,}127} - 1 = \underline{\underline{.424}}$$

$$\sigma_b = 62.93 \ MN/m^2$$

Ball Screw to Acme Nut Screw Thread

Screw:

$$\tau = \frac{2F}{\pi d_i l} = \frac{2(3000)(\pi/4)(5.227^2 - 1.621^2)}{\pi(2.021)(1.10)} = 16{,}700 \ \#/\text{in}^2$$

$$\tau = 115.14 \ MN/m^2 \qquad M.S. =$$

Nut:

$$\tau = \frac{2F}{\pi d_o l} = \frac{2(58{,}184)}{\pi(2.125)(1.10)} = 15{,}850 \ \#/\text{in}^2$$

Bearing Bronze Pg 327 ASME HNDBK

$$M.S. = \frac{43{,}000}{15{,}850} - 1 = \underline{\underline{1.71}}$$

$$\tau = 109.28 \ MN/m^2$$

$$\sigma_b = \frac{4pF}{\pi l (d_o^2 - d_i^2)} = \frac{4(.083)(58{,}184)}{\pi(1.1)(2.125^2 - 2.021^2)} = 12{,}960 \ \#/\text{in}^2$$

$$\sigma_b = 89.36 \ MN/m^2$$

$$M.S. = \frac{13{,}000}{12{,}960} - 1 = \underline{\underline{.003}}$$

Ball Screw:

Torque = 4900 in-lb (Assumed that ball screw must be capable of withstanding total torque output)

Tension = 55,000 # (@ $\Delta P = 3000$ #/in²)

$$\sigma_t = \frac{55{,}000\ \#}{\frac{\pi}{4}(1.996^2 - 1.66^2) - 2(.125)(.254)} = 61{,}020\ \#/in^2$$

$\sigma_t = 420.72\ MN/m^2$

$$\tau_{xy} = \frac{2(4900)(.998)(1.6)^*}{\pi(.998^4 - .880^4)} = 9{,}626\ \#/in^2$$

$\tau_{xy} = 66.37\ MN/m^2$

Combined Stress:

$$\sigma_1 = \frac{\sigma_t}{2} + \sqrt{\tau^2 + \left(\frac{\sigma_t}{2}\right)^2} = \frac{61{,}020}{2} + \sqrt{9626^2 + \left(\frac{61{,}020}{2}\right)^2} = 62{,}500\ \#/in^2$$

$\sigma_1 = 430.92\ MN/m^2$

$$\sigma_2 = \frac{\sigma_t}{2} - \sqrt{\tau^2 + \left(\frac{\sigma_t}{2}\right)^2} = -1{,}483\ \#/in^2$$

$\sigma_2 = -10.22\ MN/m^2$

$$\tau_{max} = \pm\sqrt{\tau_{xy}^2 + \left(\frac{\sigma_t}{2}\right)^2} = 32{,}000\ \#/in^2$$

$\tau_{max} = 220.63\ MN/m^2$

$\tau < .6 \times \sigma_1$ ∴

$$M.S. = \frac{75{,}000}{62{,}500} - 1 = \underline{\underline{0.20}}$$

* Fatigue stress concentration factor K_f, per R. C. Juvinall, "Engineering Considerations of Stress, Strain and Strength", p 252, Table 13.2.

Ball Screw Nut-To-Seal Retainer Key

Max Torque = 4900 in-lb.

shear stress

$$\tau_{key} = \frac{T}{d\,w\,L} = \frac{4900 \text{ in-lb}}{(3.894)(.25)(4.00)}$$

ℓ Avg dia

$\tau_{key} = 1260 \ \#/in^2$

$\tau_{key} = 8.69 \ MN/m^2$

Alloy steel key

$$M.S. = \frac{.6 \times 30{,}000}{1260} - 1 = \underline{\underline{\text{Excessive}}}$$

bearing stress:

$$\sigma_b = \frac{4T}{dhL} = \frac{4(4900)}{(3.894)(.215)(4.00)}$$

$\sigma_b = 5850 \ \#/in^2$

$\sigma_b = 40.33 \ MN/m^2$

$$M.S. = \frac{13{,}000}{5850} - 1 = \underline{\underline{1.2}}$$

Retainer Plate

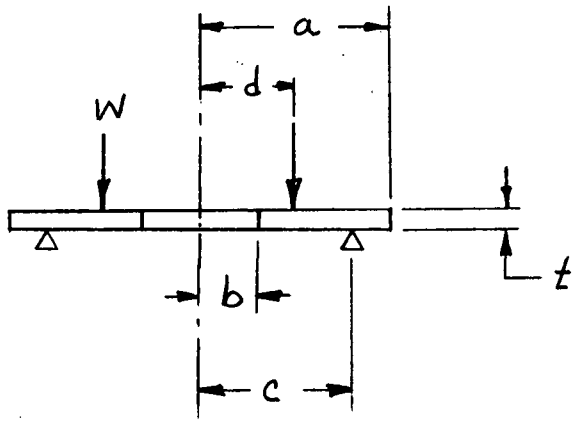

$a = 2.60$
$b = 1.00$
$c = 2.17$
$d = 1.3125$
$t = 1.00$

The formulas in Roark's "Formulas for Stress and Strain" are applicable for plate with $t \leq \frac{1}{4} a$. Use Case 15, Table 10, however to approximate the stress within the retainer plate:

$$W = 4500\left(\tfrac{\pi}{4}\right)(5.227^2 - 2.109^2) = (4500)(17.965)$$

$$W = 80,840\ \#$$

Case 15, Table 10:

$$S_{max} = S_t = \frac{-3W}{2\pi m t^2}\left[\frac{2a^2(m+1)}{a^2-b^2}\ln\frac{c}{d} + (m-1)\frac{c^2-d^2}{a^2-b^2}\right]$$

$$= \frac{-3(80,840)}{2\pi(3.33)(1.0^2)}\left[\frac{2(2.6^2)(4.33)}{2.6^2-1.0^2}\ln\frac{2.17}{1.3125} + \frac{(2.33)(2.17^2-1.3125^2)}{2.6^2-1.0^2}\right]$$

$$= -11,591\left[10.163\ln 1.653 + 1.208\right] = -11,591\,(6.316)$$

$S_{max} = 73,210\ \#/in^2$
$S_{max} = 504.76\ MN/m^2$

(Note @ $P = 6000\ \#/in^2$
$S_{max} = 97,600\ \#/in^2$)

and the simple shear stress (@ bolt diameter) is;

$$\tau = \frac{W}{(\pi D_{B.C.} - N_b d_{bH})t} = \frac{80,840\#}{[\pi(2.625) - 8(.53)]1.0} = \frac{80,840}{4.007}$$

$$\tau = 20,175\ \#/in^2 = 139.10\ MN/m^2$$

Thrust Bearings

Torrington Thrust Bearing
P/N NTH-5684 ~ 2 Req'd
(prepacked with grease)
P/N TRJ-5684 Race ~ 2 Req'd

Maximum static load

$$W_p = (\text{Proof Press}) \times (A_1 - A_3)$$

$$= (4500\ \#/in^2)(17.96\ in^2) = 80{,}850\ lbf = 359.64\ kN$$

Static capacity of NTH-5684 Bearing = 87,100# = 387.44 kN

$$M.S. = \frac{387.44}{359.64} - 1 = .077$$

Dynamic Loading

If we assume the worst condition, i.e., maximum shaft speed and stall load then the expected bearing life would be:

$$LF = \frac{BDC}{Load \times SF \times HF}$$

where

LF = life factor
BDC = basic dynamic capacity
SF = Speed factor
(Speed @ 10 in/sec = 1200 rpm)
HF = hardness factor (R_c 50)

} See Torrington catalog #NTH

Load = max. stall load (@ μ = .16)

$$LF = \frac{35100}{12{,}750 \times 2.93 \times 1.59} = .59$$

from the B-10 life vs. L.F. graph (cat. NTH) we get

B-10 Life = 88 hrs

which is equivalent to

$$88\ hrs \times 3600 \frac{sec}{hr} \times \frac{10\ in}{sec} \times \frac{1\ act.\ cycle}{15.3\ in} = 2.07 \times 10^5\ cycles$$

SUBJECT

DATE 3/13/72

WORK ORDER 1936-01-100

BY J.E.D.

CHK. BY

DATE

Acme Screw & Nut

Threads per inch = 4
No. of threads = Triple
Pitch = .250 in.
Lead = .750 in.
Height of thread = .1250 in
Total Height of thread = .1350 in
Thread thickness (Basic) = .1250 in

Dimensions (Class 2G)		
Feature	Screw (in.)	Nut (in.)
Major Diameter, D_o	1.5000/1.4875	1.5400/1.5200
Pitch Dia., D_m	1.3652/1.3429	1.3750/1.3973
Minor Diameter, D_i	1.2300/1.1965	1.2625/1.2500
Width of Flat		
Crest } Basic		.0927
Root } Basic		.0875

Backlash

$$B_{max} = (\overset{.0544}{1.3973 - 1.3429}) \tan(14.5^\circ) = .0141 \text{ in} = .358 \text{ mm}$$

$$B_{min} = (\overset{.0098}{1.3750 - 1.3652}) \tan 14.5^\circ = .0025 \text{ in.} = .0635 \text{ mm}$$

Acme Screw & Nut (cont.)

Bearing Stress

$$S_b = \frac{F_A}{\frac{\pi}{4}(D_o^2 - D_i^2)\,N} \qquad \text{(@ static cond., i.e., @ stall load)}$$

where

F_A = Actuator Stall Load

N = No. of threads in nut = 12

$$S_b = \frac{12000^{\#}}{\frac{\pi}{4}(1.4875^2 - 1.2625)(14)} = 1764\ \#/in^2$$

$$S_b = 12.16\ MN/m^2 \qquad M.S. = \frac{13,000}{1764} - 1 = \underline{\underline{6.4}}$$

Shear Stress

$$A_s = \pi D_m \left[.5 + \frac{1}{p}\tan 14.5^\circ (D_m - D_i) \right]$$

$$= \pi(1.2625)\left[.5 + 4(\tan 14.5)(1.3429 - 1.2625) \right]$$

$$= 2.313\ in^2$$

$$\tau = \frac{12,000}{2.313} = 5188\ \#/in^2 \qquad M.S. = \frac{43,000}{5200} - 1 = \underline{\underline{7.3}}$$

$$\tau = 35.77\ MN/m^2$$

No-Load Surface Speed of Sliding Surfaces

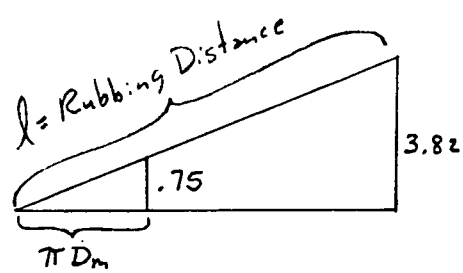

$$\frac{.75}{\sqrt{(\pi D_m)^2 + .75^2}} = \frac{3.82}{l} = \frac{.75}{4.384}$$

$$\therefore\ l = \frac{(3.82)(4.384)}{.75} = 22.33\ \text{inches} = .567\ m$$

$$\dot{l} = 22.33\ in \times \frac{3.809\ in/sec}{3.82\ in} = 22.3\ in/sec = 111.5\ ft/min. = .566\ m/sec.$$

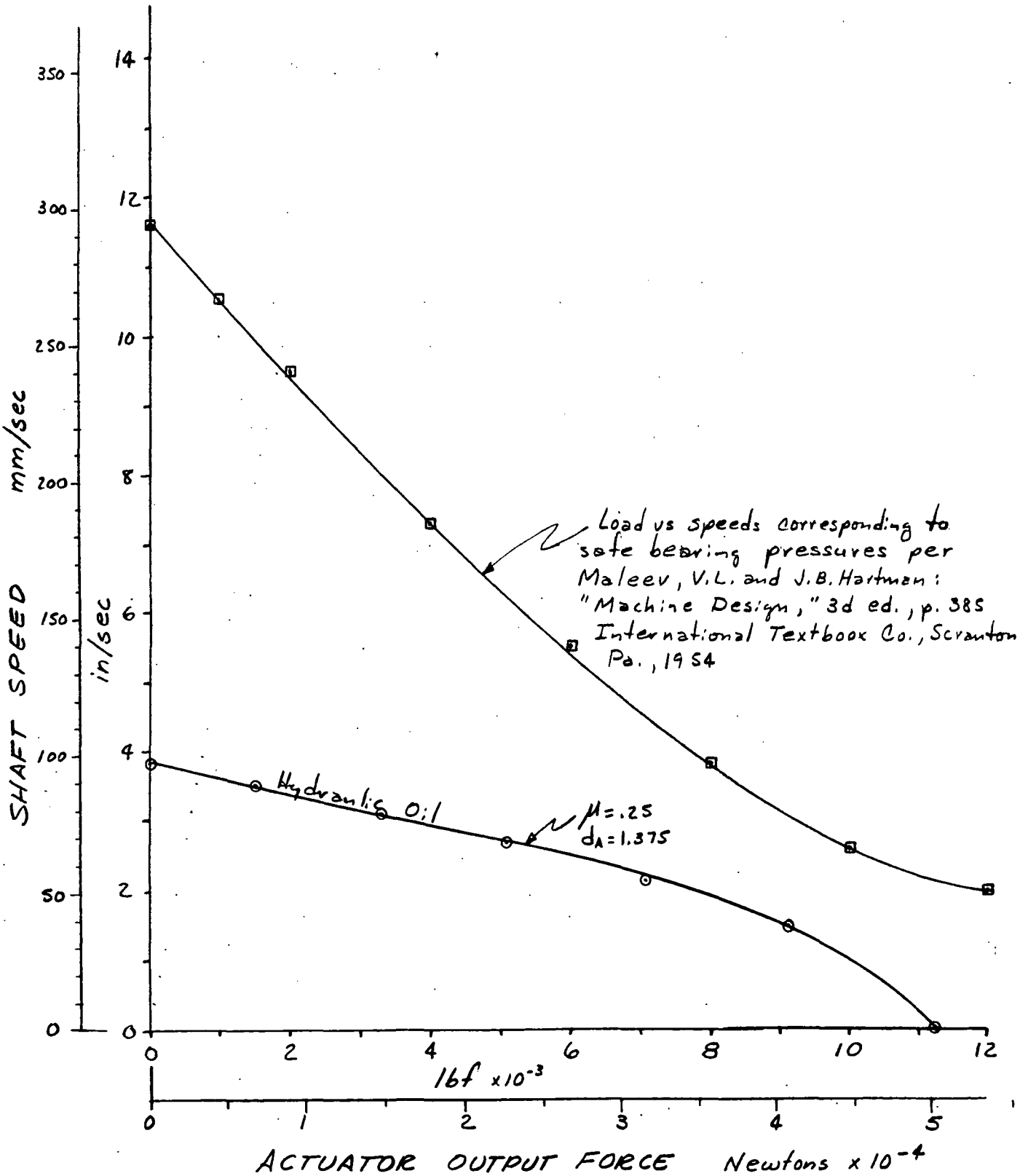
SHAFT SPEED mm/sec
in/sec
350
300
250
200
150
100
50
0
14
12
10
8
6
4
2
0
Load vs speeds corresponding to safe bearing pressures per Maleev, V.L. and J.B. Hartman: "Machine Design," 3d ed., p. 385 International Textbook Co., Scranton Pa., 1954
Hydraulic Oil
μ=.25
dA=1.375
0
2
4
6
8
10
12
lbf x10^-3
0
1
2
3
4
5
ACTUATOR OUTPUT FORCE Newtons x 10^-4

Acme Nut

Bearing:

$$P = \sigma_b = \frac{\Sigma W_i}{d \times l} = \frac{61.8\ \#}{(5.227)(.40)} = 29.56\ \#/in^2$$

$$V = \pi(5.227)\frac{in}{rev} \times \frac{1\ rev}{.75\ in} \times \frac{10\ in}{sec} = 220\frac{in}{sec} = 1095\ ft/min.$$

$$PV = (29.56\ \#/in^2)(1095\ ft/min) = 32{,}368\ \frac{\#\text{-}ft}{in^2\text{-}min} \quad @\ S = 10\ in/sec$$

$$= 12{,}950\ \frac{\#\text{-}ft}{in^2\text{-}min} \quad @\ S = 4\ in/sec$$

$$\sigma_t = \frac{(3000\ \#/in^2)(\pi/4)(5.227^2 - 2.109^2)}{\frac{\pi}{4}(3.25^2 - 2.00^2)} = \frac{53{,}895\ \#}{5.15\ in^2}$$

$$\sigma_t = 10{,}460\ \#/in^2$$

$$\sigma_t = 72.12\ MN/m^2$$

$$M.S. = \frac{18{,}000}{10{,}460} - 1 = \underline{\underline{.72}}$$

$$\tau = \frac{2(4000)(1.75)}{\pi(1.75^4 - 1.00^4)} = \frac{14{,}000}{26.32} = 532\ \#/in^2$$

$$\tau = 3.67\ MN/m^2$$

$$S_{max} = \frac{\sigma_t}{2} + \sqrt{\tau^2 + \left(\frac{\sigma_t}{2}\right)^2} = 10{,}490\ \#/in^2$$

$$S_{max} = 72.33\ MN/m^2$$

$$M.S. = \frac{18{,}000}{10{,}490} - 1 = \underline{\underline{.72}}$$

$$\tau_{max} = \sqrt{\tau^2 + \left(\frac{\sigma_t}{2}\right)^2} = 5{,}260\ \#/in^2$$

$$\tau_{max} = 36.27\ MN/m^2$$

$$M.S. = \frac{43{,}000}{5{,}260} - 1 = \underline{\text{Excess.}}$$

SUBJECT

DATE 3/28/72

WORK ORDER 1936-01-100

BY J.E.D.

CHK. BY

DATE

Sleeve Bearings:

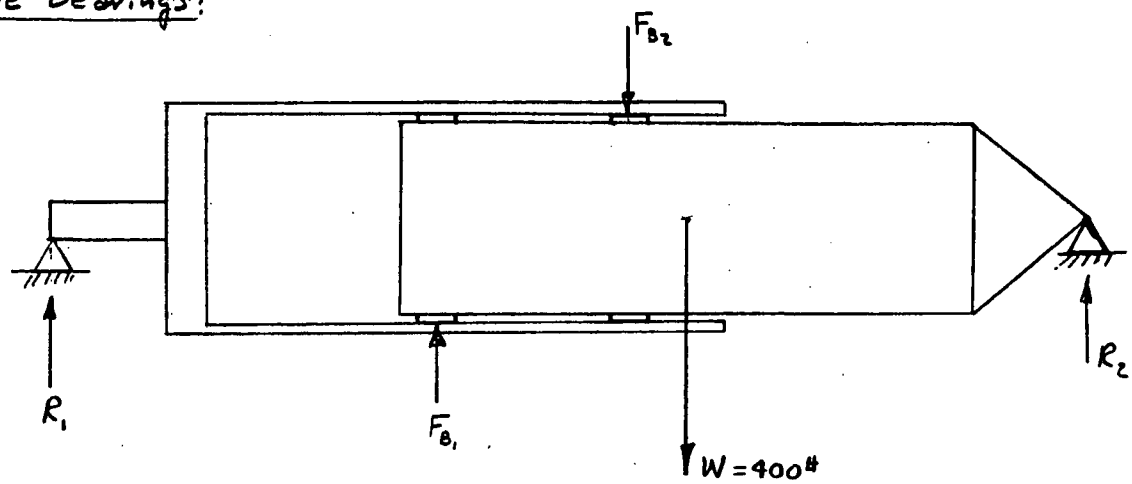

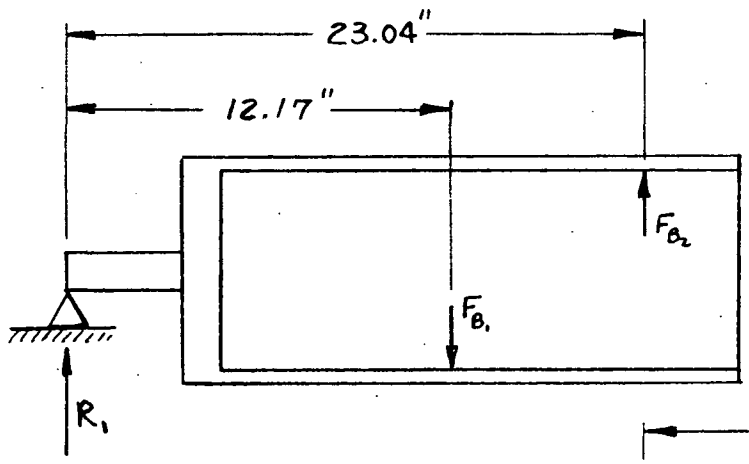

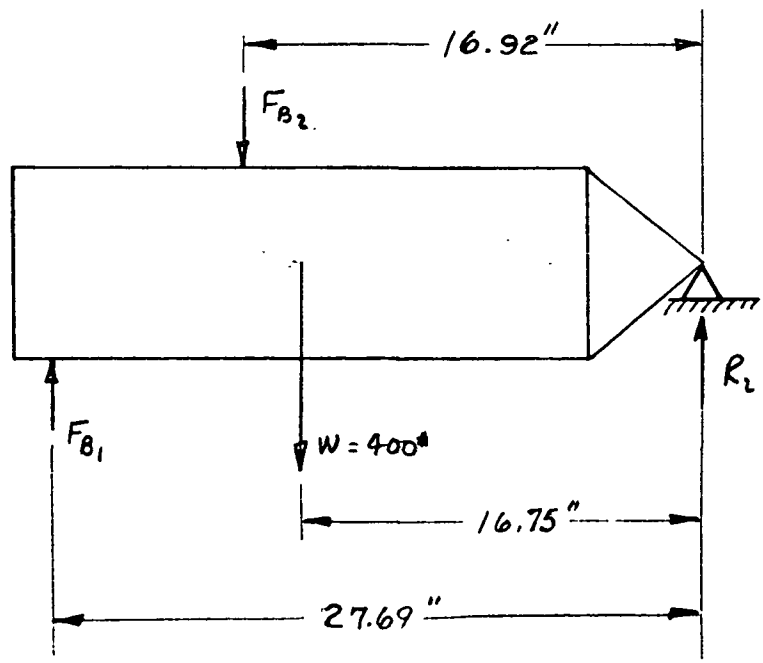

$$+\circlearrowright \Sigma M_{R_1} = 12.17 F_{B_1} - 23.04 F_{B_2} = 0$$

$$\therefore F_{B_1} = \frac{23.04}{12.17} F_{B_2} = 1.90 F_{B_2}$$

$$+\circlearrowright \Sigma M_{R_2} = 27.69 F_{B_1} - 16.92 F_{B_2} - 16.75 W = 0$$

$$\therefore (27.69)(1.90 F_{B_2}) - 16.92 F_{B_2} = 16.75(400)$$

$$F_{B_2} = \frac{16.75(400)}{(27.69)(1.9) - 16.92} = 188^{\#}$$

$$F_{B_1} = 1.90 F_{B_2} = 1.90(188) = 356^{\#}$$

$$+\uparrow \Sigma F_{y_1} = R_1 - 356 + 188 = 0$$

$$\therefore R_1 = 356 - 188 = 168^{\#}$$

$$+\uparrow \Sigma F_{y_2} = R_2 + 356 - 188 - 400 = 0$$

$$\therefore R_2 = 588 - 356 = 232^{\#}$$

Check:

$$R_1 + R_2 = 168 + 232 = 400^{\#}$$

<u>Bearing</u>: (FLUROLLY - D)

$$P = \sigma_b = \frac{356}{(7.0)(.75)} = 68.0\ \#/in^2$$

$$V = 10\ in/sec \times \frac{60 sec}{min} \times \frac{1 ft}{12 in} = 50\ ft/min$$

$$PV = (68.0\ \#/in^2)(50\ ft/min) = 3400\ \frac{\#\text{-}ft}{in\text{-}min.} \quad \left(= 1360 \frac{\#\text{-}ft}{in\text{-}min} @ S = 4\ in/sec \right)$$

$$\frac{WEAR}{10{,}000 cy} = \frac{PV}{K} \times Cycles = \frac{3400}{.75 \times 10^{10}} \times 10^4 = .0045 in = .114 mm$$

Bolts - Stationary End Cap (.500-20UNF-3A)

Pressure load

@ Proof $F_p = (4500\ \#/in^2)(5.227^2 - 1.621^2)\frac{\pi}{4}$

$F_p = 87,275\ \# = 388\ kN$

@ Working $F_w = (3000\ \#/in^2)(5.227^2 - 1.621^2)\frac{\pi}{4} + 12,000\ \#$

$F_w = 58,184 + 12,000 = 70,184\ \# = 312\ kN$

Try MS21293-27

$F_8 = F_{Preload} \geq F_w$

Using an 85,000 Min yield material w/ S-122 Lubricant

$F_8 = 80,835$ to $90,380\ \#$ (Torque = 630 ± 38 in-lb.)

$\therefore$ M.S. $= \frac{80,835}{70,184} - 1 = \underline{.15}$

The simple tension stress due to F_w & F_p is:

$\sigma_{t_w} = \frac{70,184}{8(.1625)} = 54,000\ \#/in^2 = 372.3\ MN/m^2$

& $\sigma_{t_p} = \frac{87,275}{8(.1625)} = 67,000\ \#/in^2 = 461.9\ MN/m^2$

M.S. $= \frac{85,000}{67,000} - 1 = \underline{.27}$

The shear stress in the thread in the housing is

$F_{bu} = (6000\ \#/in^2)(\pi/4)(5.227 - 1.621^2) = 116,100\ \# = 516.4\ kN$

$f_{bu} = \frac{F_{bu}}{8} = \frac{116,100\ \#}{8} = 14,550\ \# = 64.7\ kN/bolt$

$\tau_b = \frac{2 f_b}{\pi d_s l_e} = \frac{2(14,550)}{\pi(.500)(1.0)} = 18,300\ \#/in^2$

$\tau_b = 126.2\ MN/m^2$

Ult. Shear Strength for CRES 301 per MIL-HNDBK-5

M.S. $= \frac{50,000}{18,300} - 1 = \underline{1.74}$

SUBJECT

DATE 4-11-72

WORK ORDER 1936-01-100

BY J.E.D.

CHK. BY

DATE

Bolts - End Cap, Thrust Bearings (.375-24UNF-3A)

Pressure load

@ Proof $F_p = (4500\ \#/in^2)(\pi/4)(5.227^2 - 1.621^2)in^2$

$F_p = (4500\ \#/in^2)(19.395\ in^2) = 82,275\# = 366.0\ kN$

@ Working $F_w = (3000\ \#/in^2)(19.395\ in^2) + 12000\#$

$F_w = 70,185\# = 312.2\ kN$

Try MS21291-40

$F_{16} = F_{Preload} \geq F_w$

Using an 85,000 min. yield material, S-122 lubricant and a torque load of 261 ± 16 in-lb the resulting bolt load is

$F_{16} = 89,557$ to $96,956\#$ (Ref. Report No. 9600:M027)

$$M.S. = \frac{89,557}{70,185} - 1 = \underline{\underline{.28}}$$

The simple tension stress due to F_w & F_p is:

$$\sigma_{tw} = \frac{70,185}{16(.0894)} = 49,060\ \#/in^2 = 338.3\ MN/m^2$$

$$\sigma_{tp} = \frac{82,275}{16(.0894)} = 61,020\ \#/in^2 = 420.7\ MN/m^2$$

$$M.S = \frac{85,000}{61,020} - 1 = \underline{\underline{.39}}$$

The shear stress in the housing threads is:

$$F_{bu} = (6000\ \#/in^2)(\pi/4)(5.227^2 - 1.621^2) = 116,100\# = 516.4\ kN$$

$$f_{bu} = \frac{116,100}{16} = 72,700\ \#/bolt = 323.4\ kN/bolt$$

$$\tau = \frac{2 f_b}{\pi d_s l_e} = \frac{2(72,700)}{\pi(.375)(.9)} = 13,700\ \#/in^2 = 94.5\ MN/m^2$$

$$M.S. = \frac{50,000}{13,700} - 1 = \underline{\underline{2.65}}$$

Bolts - Bearing Retainer (.500-20UNF-3A)

Pressure Load:

@ Proof $F_p = (4500\ \#/in^2)(\pi/4)(5.227^2 - 1.996^2)\ in^2$

$F_p = (4500\ \#/in^2)(18.33\ in^2)$

$F_p = 82{,}485\ \# = 366.9\ kN$

@ Working $F_w = (3000\ \#/in^2)(18.33\ in^2) + 12{,}000\ \#$

$F_w = 66{,}990\ \# = 298.0\ kN$

Try MS21293-23

$F_8 = F_{Preload} \geq F_w$

Using an 85,000 min. yield material, S-122 lubricant and a torque load of 630±38 in-lb the resulting bolt load is:

$F_8 = 80{,}835$ to $90380\ \#$ (Ref. Report No. 9600:M027)

$$M.S. = \frac{80{,}835}{66{,}990} - 1 = \underline{\underline{.20}}$$

The simple tension stress due to F_w & F_p is:

$$\sigma_{tw} = \frac{66{,}990}{8(.1625)} = 51{,}500\ \#/in^2 = 355.1\ MN/m^2$$

$$\sigma_{tp} = \frac{82{,}485}{8(.1625)} = 62{,}250\ \#/in^2$$

$$\sigma_{tp} = 429.2\ MN/m^2$$

$$M.S. = \frac{85{,}000}{62{,}250} - 1 = \underline{\underline{.365}}$$

The shear stress in the power nut is

$$F_{bu} = (6000\ \#/in^2)(\pi/4)(5.227^2 - 1.996^2)\ in^2 = 110{,}000\ \# = 489.3\ kN$$

$$f_{bu} = \frac{110{,}000}{8} = 13{,}750\ \# = 61.2\ kN$$

$$\tau = \frac{2 f_{bu}}{\pi d_s l_e} = \frac{2(13{,}750)}{\pi(.500)(.90)} = 19{,}500\ \#/in^2$$

$$\tau = 134.4\ MN/m^2$$

Ult. Shear per ASME Metal Properties Handbook

$$M.S. = \frac{43{,}000}{19{,}500} - 1 = \underline{\underline{1.2}}$$

Servo Valve Mounting Bolts (1/4 - 28UNF)

$S/T = 1210.08$

$\therefore T_{max} = \frac{30,000}{1210.08} = 24.8$

$\therefore T = 20 - 24$ in-lb

$P/T = 32.63$

$P = 32.63 \begin{bmatrix} 20 \\ 24 \end{bmatrix} = \begin{matrix} 653 \\ 783 \end{matrix} = 717.86 \pm 65.26$ /bolt

Total Load $= 4(717.86 \pm 65.26) = 2871.44 \pm 261.04$

$T.L. = \begin{matrix} 2610 \\ 3132 \end{matrix}$ lbs. $= \begin{matrix} 11.6 \\ 13.9 \end{matrix}$ kN

Potentiometer Extension Clamp Screw (6-32UNC)

$S/T = 9381.7$

$T_{max} = \frac{30,000}{9381.7} = 3.2$ @ yield

$T_{max} = \frac{75,000 \times .8}{9381.7} = 6.4$ in-lb

$\therefore$ Use 3-5 in lb

$P/T = 54.2$

$P = 54.2 \begin{bmatrix} 3 \\ 5 \end{bmatrix} = \begin{matrix} 162.6 \\ 271.0 \end{matrix} = \begin{matrix} 723 \\ 1205 \end{matrix}$ N

Extension (3/4 - 16 UNF)

$S/T = 39.74$

$\therefore T_{max} = \frac{100,000}{39.74} = 2516$ in-lb

$P/T = 12.28$

$T = \frac{12,000}{12.28} = 977$ in-lb

Use T = 950-1050 in-lb (80-88 ft-lb)

$P = \begin{bmatrix} 950 \\ 1050 \end{bmatrix} (12.28) = \begin{matrix} 11,789 \\ 12,968 \end{matrix} = \begin{matrix} 52.4 \\ 57.7 \end{matrix}$ kN

$\tau = \frac{2P}{\pi d l} = \frac{2(12,968)}{\pi(.75)(.9)} = 12,230$ #/in² = 84.32 MN/m²

Potentiometer Mtg Bolts (4-40 UNC)

$S/T = 17421.2$

$\therefore T_{max} = \frac{30,000}{17421.2} = 1.7$

$\therefore$ Use T = 1.5 - 2.0

$P/T = 67.34$

$P = 67.34 \begin{bmatrix} 1.5 \\ 2.0 \end{bmatrix} = \begin{matrix} 101 \\ 134 \end{matrix}$

Total Load $= 4 \begin{bmatrix} 101 \\ 134 \end{bmatrix} = \begin{matrix} 404 \\ 536 \end{matrix}$ lbs. $= \begin{matrix} 1.797 \\ 2.384 \end{matrix}$ kN

Piston Thread Locking Bolt (8-32 UNC)

$S/T = 4906.7$

$\therefore S = 4906.7\,T$

@ $S = S_y$

$$T = \frac{30{,}000}{4906.7} = 6.114$$

$\therefore$ Use $T = 4$ To 6 in-lb

$P/T = 47.62$

$$\therefore P = 47.62\begin{bmatrix}4\\6\end{bmatrix} = \left.\begin{matrix}190.5\\285.7\end{matrix}\right\} \text{Say } 238 \pm 48 \text{ lbf}$$

Total Load $= 2(238 \pm 48) = 476 \pm 96$ lbf $= 2.117 \pm .427$ kN

Bearing Ring Bolts (#10-32 UNF)

$S/T = 2904.4$

$$\therefore T_{Max} = \frac{30{,}000}{2904.4} = 10.33$$

$\therefore$ Use 8-10 in lb

$P/T = 42.46$

$$P = 42.46\begin{bmatrix}8\\10\end{bmatrix} = \begin{matrix}340 \text{ lbf}\\425\end{matrix}/\text{bolt} = \begin{matrix}1.512\\1.890\end{matrix} \text{ kN/bolt}$$

SUBJECT

DATE 5-15-72

WORK ORDER 1936-01-100

BY J. E. Dever

CHK. BY

DATE

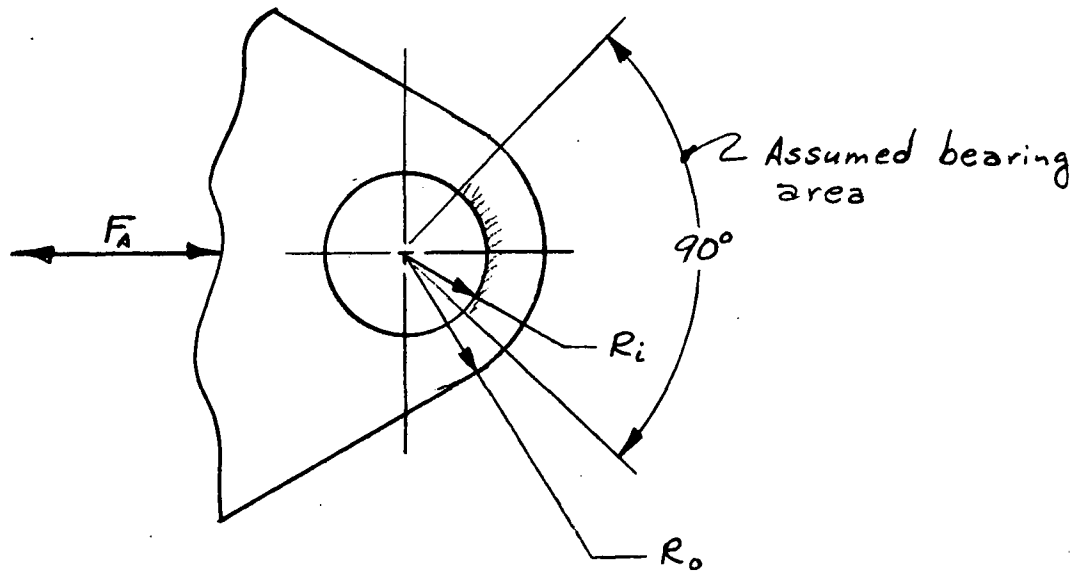

Double Shear - Mounting Bolt

$$\tau_d = \frac{F_A}{2\pi r_b^2} = \frac{13{,}000^{\#}}{2\pi\,(.4375\,in)^2} = 10{,}810\ \#/in^2$$

$$\tau_d = 74.5\ MN/m^2$$

Bearing

$$\sigma_{Br} = \frac{F_A}{(90/180)(2r_b)(2t)} = \frac{13{,}000^{\#}}{(90/180)(2\times .4375)(2\times .58)\,in^2} = 25{,}620\ \#/in^2$$

$$\sigma_{Br} = 176.6\ MN/m^2$$

$$M.S. = \frac{50{,}000}{25{,}620} - 1 = \underline{.95}$$

Tear Out

$$\sigma_t = \frac{F_A}{2t\,(R_o - R_i)} = \frac{13{,}000}{2\,(.58)(1.09-.4375)} = 17{,}180\ \#/in^2$$

$$\sigma_t = 118.4\ MN/m^2$$

$$M.S. = \frac{30{,}000}{17{,}180} - 1 = \underline{\underline{.746}}$$

Housing (cont.)

Ports:

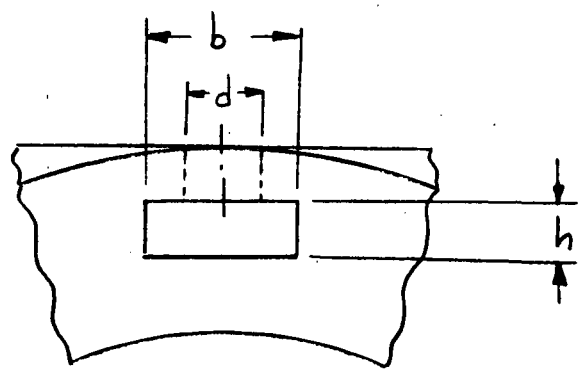

If we set the hydraulic radius of the rectangular slot equal to the hydraulic radius of the inlet port diameter we get

$$(R_H)_{Dia} = (R_H)_{slot}$$

$$\frac{\pi/4\, d^2}{\pi d} = \frac{bh}{2(b+h)}$$

or

$$\frac{d}{4} = \frac{bh}{2(b+h)}$$

$$d = \frac{2bh}{b+h}$$

$d = 9.525$ mm

$h = 6.35$ mm

$b = 19.05$ mm

if $d = .375$ in & $h = .250$, then

$$b = \frac{hd}{2h-d} = \frac{(.25)(.375)}{2(.25)-.375} = .750 \text{ in}$$

d	h	b
.375	.250	.750
	.300	.500
	.375	.375
.390	.250	.886
	.300	.557
	.375	.406

Housing (cont.)

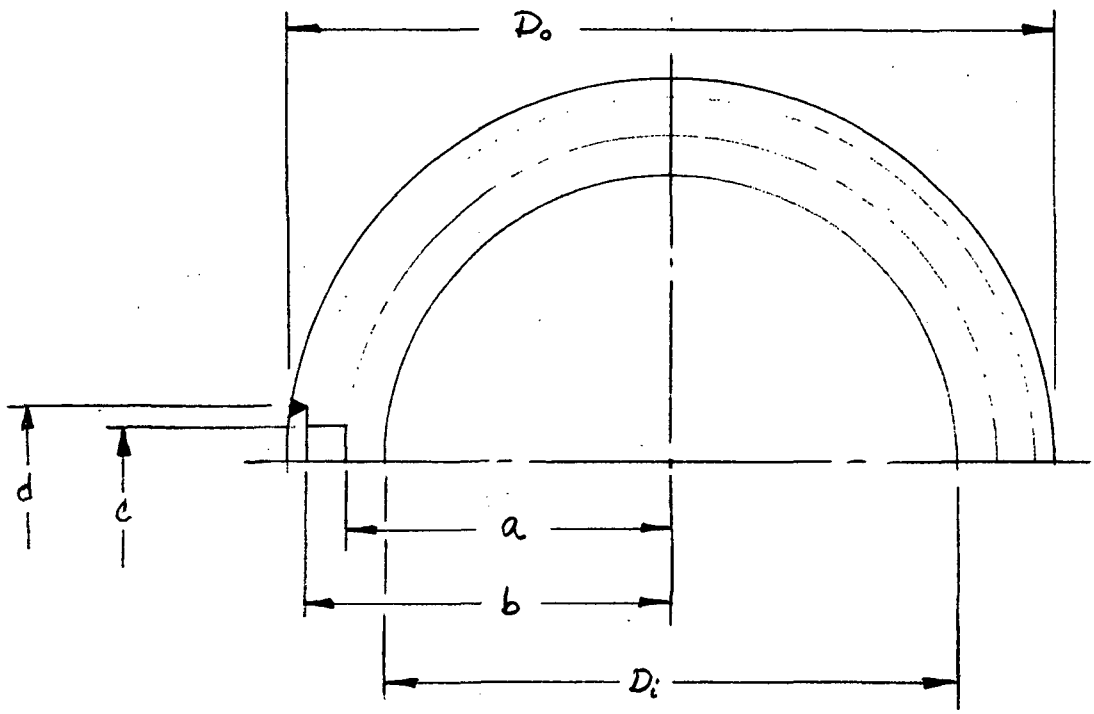

$a = 3.00''$ $\quad D_i = 5.23''$

$b = 3.28''$ $\quad D_o = 7.00''$

$c = .625''$

$d = .875''$

Assume pressure is contained by a cylinder with an inner diameter of D_i and an outer diameter of $2a$ combined with an outer shell with inner diameter of $2b$ and an outer diameter of D_o. Then

$$t = \left(3.00 - \frac{5.23}{2}\right) + (3.50 - 3.28) = (.385 + .220)$$

$$t = .605''$$

$$R_m = \frac{(R_{m_1} + R_{m_2})}{2} = \left(\frac{3.00 + 2.615}{2} + \frac{3.5 + 3.28}{2}\right) \times \frac{1}{2} = 3.099''$$

$$\frac{t}{R_m} = \frac{.605}{3.099} = .195 \therefore \text{ use thick wall analysis}$$

Housing (cont.)

Stresses

$$S_1 = \frac{p\,(D_i'/2)^2}{(D_o'/2)^2 - (\frac{D_i'}{2})^2}$$

$$D_i'/2 = R_m - t/2 = 3.099 - \frac{.605}{2} = 2.7965''$$

$$D_o'/2 = R_m + t/2 = 3.099 + \frac{.605}{2} = 3.4020''$$

$$p = 4500\,\#/in^2 = 31.03\ MN/m^2$$

$$\therefore S_1 = \frac{4500\,(2.7965)^2}{3.402^2 - 2.7965^2} = 9,380\,\#/in^2 = 64.67\ MN/m^2$$

$$S_2 = \frac{p\left[(D_o'/2)^2 + (D_i'/2)^2\right]}{(D_o/2)^2 - (D_i/2)^2} = \frac{(4500)(3.402^2 + 2.7965^2)}{3.402^2 - 2.7965^2} = 23,255\,\#/in^2 = 160.3\ MN/m^2$$

$$S_3 = p = 4500\,\#/in^2 = 31.03\ MN/m^2$$

$$\tau_{max} = p\,\frac{(D_o'/2)^2}{(D_o'/2)^2 - (D_i'/2)^2} = \frac{4500\,(3.402)^2}{3.402^2 - 2.7965^2} = 13,880\,\#/in^2$$

$$\tau_{max} = 95.70\ MN/m^2$$

$$M.S. = \frac{30,000}{23,255} - 1 = \underline{\underline{.29}}$$

Deflections:

$$\Delta(D_i'/2) = \frac{p\,(D_i'/2)}{E}\left\{\frac{(D_o'/2)^2 + (D_i'/2)^2}{(D_o'/2)^2 - (D_i'/2)^2} - \nu\left[\frac{(D_i'/2)^2}{(D_o'/2)^2 - (D_i'/2)^2} - 1\right]\right\}$$

$$= \frac{(4500)(2.7965)}{29\times10^6}\left[\frac{3.402^2 + 2.7965^2}{3.402^2 - 2.7965^2} - .3\left(\frac{2.7965^2}{3.402^2 - 2.7965^2} - 1\right)\right]$$

$$= .000434\left[5.167 - .3(1.084)\right] = .000434\,(4.842)$$

$$\Delta(D_i'/2) = .0021\ in. = .053\ mm$$

Housing (cont.)

$$\Delta\left(D_o'/2\right) = \frac{p\left(D_o'/2\right)}{E}\left[\frac{\left(D_i'/2\right)^2}{\left(D_o'/2\right)^2-\left(D_i'/2\right)^2}\left(2-\nu\right)\right]$$

$$= \frac{(4500)(3.402)}{29\times10^6}\left[\frac{2.7965^2}{3.402^2-2.7965^2}\left(2.0-.3\right)\right]$$

$$= .00187 \text{ in.} = .00475 \text{ mm}$$

$$p_u = S_u \ln\frac{D_o'/2}{D_i'/2} = (75{,}000)\ln\left(\frac{3.402}{2.7965}\right)$$

$$p_u = 14{,}700 \text{ psid} = 101.35 \text{ MN/m}^2$$

SUBJECT

DATE 12-11-72

WORK ORDER

BY J.E. DEVER

CHK. BY

DATE

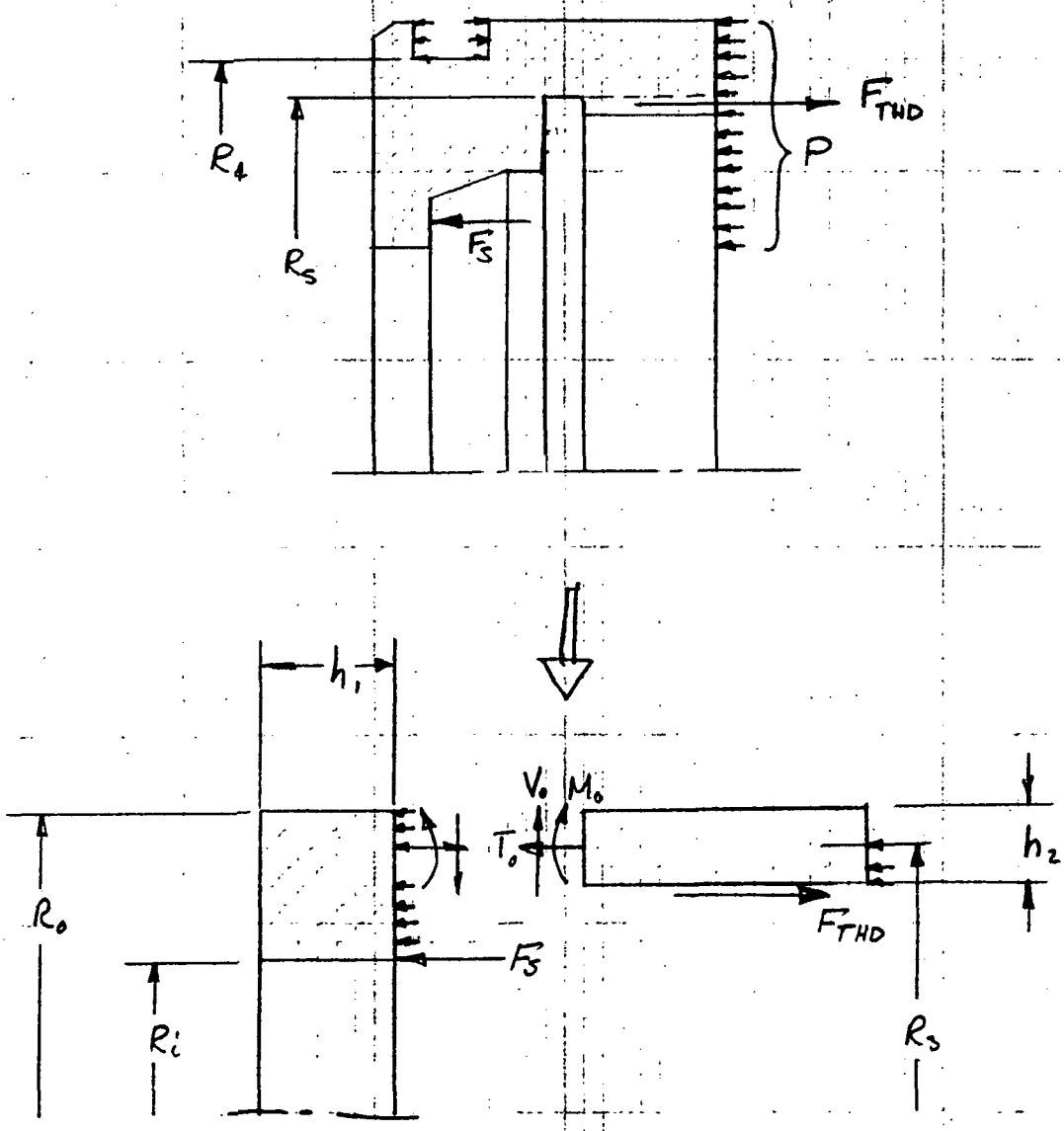

Case 17.

$$(S_r)_{max} = \frac{3w}{4t^2}\left[a^2 - 2b^2 + \frac{b^4(m-1) - 4b^4(m+1)\ln\frac{a}{b} + a^2b^2(m+1)}{a^2(m-1) + b^2(m+1)}\right]$$

$$= \frac{3(3000)}{4(1.25)^2}\left[2.6^2 - 2(1.25^2) + \frac{1.25^4(1.94) - 4(1.25^4)(3.94)\ln\frac{2.6}{1.25} + 2.6^2(1.25^2)(3.94)}{2.6^2(1.94) + 2.6^2(3.94)}\right]$$

$$= 1440\left[3.635 + \frac{18.174}{39.749}\right] = 5893\ \#/in^2 \quad (@\ \text{outer edge})$$

$$= 40.63\ MN/m^2$$

Case 18.

$$W = PA_s = (3000)\left(\frac{\pi}{4}\right)(3.0^2 - 2.125^2) = 10{,}570\#$$

$$(S_r)_{max} = \frac{3W}{2\pi t^2}\left[1 - \frac{2mb^2 - 2b^2(m+1)\ln a/b}{a^2(m-1) + b^2(m+1)}\right]$$

$$= \frac{3(10{,}570)}{2\pi(1.25)^2}\left[\frac{2(2.94)(1.25^2) - 2(1.25^2)(3.94)\ln\frac{2.6}{1.25}}{39.749}\right]$$

$$= (3230)\left(\frac{.17}{39.749}\right)$$

$$= 13.8\ \#/in^2 = 95.15\ kN/m^2$$

$$(S_r)_{Total} = 5893 + 13.8 = 5910\ \#/in^2 \quad @\ \text{outer edge}$$

$$= 40.75\ MN/m^2$$

SUBJECT

DATE 12-11-72

WORK ORDER.

BY J.E.D.

CHK. BY

DATE

Tensile Stress (Tube)

$$S_t = \frac{F}{A} = \frac{3000\pi(2.6^2 - 1.25^2) + 10,570}{\pi(2.6^2 - 2.26^2)}$$

$$S_t = \frac{59,560^{\#}}{5.19\ in^2} = 11,470\ \#/in^2$$

$$S_t = 79.08\ MN/m^2$$

$$M.S. = \frac{16,000}{11,470} - 1 = \underline{\underline{.39}}$$

Shear stress - Threads

$$\tau_{THD} = \frac{59,560}{\frac{1}{2}[\pi(4.438)(.6)]}$$

$$\tau_{THD} = \frac{59,560}{4.183} = 14,240\ \#/in^2 = 98.18\ MN/m^2$$

Assume $F_{su} = .6\,F_{tu} = .6(34,000) = 20,400\ \#/in^2$

$$M.S. = \frac{20,400}{14,240} - 1 = \underline{\underline{.43}}$$

Estimated Weight – Summary

1. Acme Nut	17.52
2. Bearing & Nut Retainer	6.03
3. Thrust Bearing + Races	2.08
4. End Cap - Thrust Bearings	12.56
5. Key-Ring	4.32
6. Shim	.47
7. Rod End	.46
8. Rod End Nut + Extension	.72
9. Acme Screw	4.71
10. Potentiometer Extension + Clamp	.43
11. Ball Screw	15.68
12. Ball Nut	12.74
13. Square Nut	8.58
14. Seal Assy	1.50
15. Piston	3.03
16. Cover	77.86
17. Seal Ring	5.18
18. Ball Bearing	1.03
19. Housing	127.27
20. End Cap - Stationary	29.52
	331.69#

Est. weight of Pot. + Servo Valve ≈ 6.31#

338.00# = Dry Weight

= 153.3 kg

APPENDIX B

SELF-LOCKING ACTUATOR ASSEMBLY PROCEDURES

SELF-LOCKING ACTUATOR
ASSEMBLY PROCEDURES

REFER DRAWING NO. 1162200

1. Clean all parts to levels indicated on individual details.

2. Install Retainer (21) subassembly on the O.D. of Ball Screw Assembly Nut (20), and install Ball Screw Seal (13) on screw of (20) snug against Ball Screw Nut (omit Shim (10)), put Key (30) into the keyway in Ball Screw Assembly (20).

3. Screw Piston (7) onto the end of Retainer (21) (hand tight) against the Ball Screw Seal (13) until slight drag of seal assembly can be felt when Ball Screw is rotated. If the threaded end of Retainer (21) bottoms out against the end of the Retainer (21), then remove, install Shim (10) and reassemble - otherwise omit Shim (10) and continue. Mark location of lockwire hole on Piston (7) and remove. Drill hole in Piston (7) as shown on drawing. (Note: Piston will be lockwired to ball return bracket screw on ball screw nut later on. If there are no holes in the head of the ball return bracket screw, drill hole through head large enough for lockwire at this time). Reclean Piston (7) and reassemble onto the ball nut subassembly and tighten hand tight (parts should fit snug - no axial play. - If practical tighten Piston (7) until a slight drag due to the seal assembly (13) can be felt when the ball screw is rotated). Lockwire Piston (7) to screw head as shown. Lubricate and install Packing (46) and Cap Seal (62) onto Piston (7). Note: Care should be taken to prevent damage and/or contamination of this (and all other seals) during subsequent assembly steps.

4. Lubricate and install Packing (46) and Cap Seal (62) onto Power Screw Nut (5). Lubricate and install Packing (43) into the bore on Nut (5). Turn the ball screw of Ball Screw Assembly (20) into Nut (5) until it bottoms out. Back-off screw until key slots align. Install Key (31) (2 required) and secure with Safety Wire (34)

wrapped around the O.D. of the ball screw in the groove provided. Bend the ends of the wire (after twisting together) into one of the keyway slots.

5. Lightly lubricate the ID of Housing (18), the OD of Retainer (21), the OD of Nut (5) and the ball screw.

6. Press Bearing (65) (make sure that bearing is packed with grease - if not, add grease) into End Cap (4) until flush or .010 below the surface of End Cap (4). Lubricate and install Packing (45), Packing (46), Retainer (49) and Retainer (50).

Note: Be sure retainers location with respect to packing is as shown on drawing.

7. Rotate the ball screw until the back face (one nearest the ball screw nut) of Power Screw Nut (5) contacts the nearest face of Piston (7). Insert the ball screw and Acme nut assembly into the housing. Install Key Ring (11), Race (69) (2 required), Bearing (68) (packed with grease) (2 required), End Cap (17) and Retainer (3). Hold in place with the two Bolts (36). Measure the depth from the open end of the Housing (18) to the nearest end of the ball screw nut retainer (21). Measure the length of the diameter of the End Cap (4) that fits within the cylinder. The difference between these two dimensions minus 7.64 equals the width of Shim (8). Remove Retainer (3), Bearing Race (69), Bearing (68), End Cap (17) and Ring (11).

8. Assemble end cap subassembly into end of Housing (18), install Bolts (36) and (37) and Washers (29) as shown, torque to indicated values and safety wire with (33).

9. Lubricate and assemble Packing (47), Packing (48) * and Retainer (51) (2 required) onto Bearing Ring (6). Lubricate the bearing surface and slide over the end of Housing (18). The end of Bearing Ring (6) with the four tapped holes should be toward the square portion of the housing.

*May be installed anytime prior to Step 12.

10. Install Key Ring (11) (with one key in line with the servo valve pad), Shim (8) (if required) and End Cap (17) and secure with 8 each of Bolt (35) and Washer (28), torque to values shown and safety wire with (32). Install Bearing (68) (packed with grease) and Race (69) onto Nut (5). Measure distance from face of Race (69) to land (with taped holes) of Nut (5). Size Shim (9) to give line-to-line to .001 gap between Retainer (3) and Race (69). Install Shim (9) and Retainer (3), secure with 8 each of Bolt (36) and Washer (29), torque to values shown and safety wire with (33).

11. Rotate Nut (5) by hand to make sure that there is no binding of the ball screw. Continue rotating Nut (5) until Retainer (21) bottoms against the End Cap (4).

12. Screw Power Screw (19) into Nut (5) until in contact with the Bolt Heads (36) then back off until one of the slots in the Power Screw (19) aligns with a key on the Key Ring (11). (Make sure that no lubricant is applied to the Acme thread). Install Packing (42) in the Sleeve (12). After noting the relative position of the four radial slots (machined into the flange on the end of Power Screw (19)) with respect to the key way on the end of the screw (should be in-line), slide Sleeve (12) over the end of Housing (18).

13. Slide Bearing Ring (6) into the end of Sleeve (12) and secure with four each Screws (57), torque to value shown and safety wire with (32).

14. Attach Extension (2) onto the end of Potentiometer (1) by means of Clamp (67), torque to value given and safety wire with (32). The dimension from the mounting face of the potentiometer to the end of the extension should be 34.40 inches at the 19.00 dimension shown on 1162201.

15. Lubricate Packing (41) and install onto Potentiometer (1). Install Potentiometer (1) into assembly making sure that electrical connector is pointing toward the servo valve area. Secure with 4 each Screws (52), torque to values given. Adjust Potentiometer (1) to give a potentiometer plus extension length of

32.70 inches when the actuator is fully contracted. Secure with 2 each Setscrews (24).

16. Install Nut (55) (2 required) and Clevis (66), adjust to given dimension* then secure with locking keys (if available) and safety wire with (32) or (33).

17. Install Vent Valve (64) plus Packing (38), and Union (25) plus Packing (40) (2 places).

18. Install Servo Valve (63), and four each Packing (39), orientated as shown on drawing no. 1162200 (Sleeve (12) should not hit Servo Valve (63) when actuator is fully contracted). Secure with four each of Screws (58) and torque to values shown.

* If the end of Potentiometer Extension Rod (2) extends into the clevis area trim Rod (2) flush with Clevis (66).

APPENDIX C

SELF-LOCKING ACTUATOR
BASIC PARTS LIST

BASIC PARTS LIST

DRAWING NO. 1162200

SHEET 1 OF 4

LET.	DATE	REVISION	BY	CK.D

TITLE

DRAWN J Dever | DATE

CHECKED

APPROVED

AEROJET-GENERAL CORPORATION
SACRAMENTO • CALIFORNIA

SIZE	DWG. NO.	REV.	1	2	3	4	5	6	PART NAME	NO. REQ'D.
E	1162200-9		x						Actuator-Self Locking, Linear	
D	1162201-1			x					Potentiometer	1*
D	1162202-9			x					Extension-Potentiometer	1
	1162202-1				x				Tube	1
	1162202-2				x				Rod	1
					x				Weld Rod	AR
D	1162203-1			x					Retainer-Thrust Bearing	1
E	1162204-1	**		x					End Cap-Housing	1
E	1162205-9	**		x					Nut-Power Screw	1
	1162205-1				x				Sleeve	1
	1162205-2				x				Nut	1
D	1162206-9			x					Bearing Ring - Sleeve	1
	1162206-1				x				Ring	1
	1162206-2				x				Bearing	1
D	1162207-1	**		x					Piston-Ball Screw	1
D	1162208-1	**		x					Shim	1
	1162208-2			x					Shim	1
	1162208-3			x					Shim	1
	1162208-4			x					Shim	1
D	1162209-9			x					Key Ring - Sleeve	1
	1162209-1				x				Key	1
	1162209-2				x				Ring	1
	MS24693C 30								Screw	4
D	1162211-9			x					Sleeve	1

BASIC PARTS LIST

DRAWING NO. 1162200

SHEET 2 OF 4

LET.	DATE	REVISION	BY	CK.D

TITLE: Actuator-Self Locking, Linear

AEROJET-GENERAL CORPORATION
SACRAMENTO • CALIFORNIA

DRAWN	DATE
J Dever	
CHECKED	
APPROVED	

SIZE	DWG. NO.	REV.	1	2	3	4	5	6	PART NAME	NO. REQ'D.		Code Ident. No.
	1162211-1				x				Sleeve	1		
	1162211-2				x				Plate			
	MS9390-450				x				Pin	2		
	NAS1352C08-6				x				Screw	28		
					x				Primer Locquic Gradet	AR		05972
					x				Sealing Compound MIL-S-22473 GradeC	AR		
	1162212-1			x					Retainer	1		
	1162212-2			x					Seal	1		
D	1162215-9	**		x					End Cap - Thrust	1		
	1162215-1				x				End Cap	1		
	1162215-2				x				Bearing	1		
D	1162216-9	**		x					Housing - Actuator	1		
	1162216-1				x				Housing	1		
	1162216-2				x				Port Cover	1		
	1162216-3				x				Key	2		
	MS16562-199				x				Pin	1		
	MS16562-250				x				Pin	8		
	MS24675-10				x				Screw	6		
	343102				x				Plug	14		92555
					x				Weld Rod A1S1349 MIL-R-5031 Class 6	AR		
D	1162217-1			x					Screw, Power-Acme Thread	1		
D	1162118-9			x					Screw Ball Screw & Nut Assembly	1		
	1162218-1				x				Nut			

BASIC PARTS LIST

DRAWING NO. 1162200

SHEET 3 OF 4

LET.	DATE	REVISION	BY	CK.D

TITLE: Actuator-Self Locking, Linear

AEROJET-GENERAL CORPORATION

DRAWN	DATE
J Dever	
CHECKED	
APPROVED	

SIZE	DWG. NO.	REV.	1	2	3	4	5	6	PART NAME	NO. REQ'D.		
	1162218-2				x				Ball Screw and Nut Assembly	1		
	1162218-3			x					Seal Retainer	1		
	AN565D4H3			x					Setscrew	2		
	AN815-8S			x					Union	2		
	MS20002C6			x					Washer	16		
	MS20002C8			x					Washer	16		
	MS20066-240			x					Key	1		
	MS20067-196			x					Key	2		
	MS20995C20			x					Wire, Safety	AR		
	MS20995C32			x					Wire, Safety	AR		
	MS20995C60			x					Wire, Safety	AR		
	MS21291-40			x					Bolt	16		
	MS21293-23			x					Bolt	9		
	MS21293-28			x					Bolt	7		
	MS28775-012			x					Packing	1		
	MS28775-014			x					Packing	4		
	MS28775-016			x					Packing	2		
	MS28775-021			x					Packing	1		
	MS28775-126			x					Packing	1		
	MS28775-226			x					Packing	1		
	MS28775-326			x					Packing	1		
	MS28775-427			x					Packing	3		

BASIC PARTS LIST

DRAWING NO. 1162200

SHEET 4 OF 4

LET.	DATE	REVISION	BY	CK.D

TITLE: Actuator-Self Locking, Linear

AEROJET-GENERAL CORPORATION

DRAWN: J Dever

DATE:

CHECKED:

APPROVED:

SIZE	DWG. NO.	REV.	1	2	3	4	5	6	PART NAME	NO. REQ'D.		
	MS28775-441			x					Packing	1		
	MS28775-443			x					Packing	1		
	MS28782-29			x					Retainer	1		
	MS28782-54			x					Retainer	5		
	MS28782-68			x					Retainer	2		
	MS35275-222			x					Screw	4		
	1.250-18 UNEF-3B			x					Nut	2*		
	NAS1351 C3H8			x					Screw	8		
	NAS1351 C4H14			x					Screw	4		
	30661-427N			x					Cap Seal	2		25220
	16-120B			x					Valve	1*		94697
	559T-4D-50			x					Valve	1		91816
	1209			x					Bearing	1		52676
	121-10078			x					Clevis	1*		94697
	CG103			x					Clamp	1		23266
	NTH-5684			x					Bearing	2		78784
	TRJ-5684			x					Race	2		78784
	.250-28UNF -3A X .25 LG MIN			x					Screws	4		
				x					Lubricant per ALRC-44159	AR		
				x					Lubricant per MIL-G-27617	AR		

*Government Supplied Part
**Changed during fabrication, see CDN 3003

APPENDIX D

WYLE LAB TEST REPORT

DATA SHEET REPORT

PROCUREMENT
SACRAMENTO
JAN 22 9 56 AM '73

WYLE LABORATORIES

18 JANUARY 1973

ASSOCIATED MACHINE COMPANY
400 MATHEW STREET
SANTA CLARA, CALIF. 95050

ATTENTION: MR. H. J. ZITZER
TEST TITLE: PROOF PRESSURE
REFERENCES:

Your Purchase Order No.	6707-7082
Wyle Laboratories Job No.	53294
Government Contract No.	N.A.
Wyle Laboratories Report No.	53294

Gentlemen:

This is to certify that the enclosed Test Data Sheets contain true and correct data obtained in the performance of the test program as set forth in your purchase order.

Where applicable, instrumentation used in obtaining this data has been calibrated using standards which are traceable to the National Bureau of Standards.

Test Results:

ONE (1) ACTUATOR, PART NUMBER 1162200, SERIAL NUMBER 1, WAS SUBJECTED TO THE PROOF PRESSURE TEST DESCRIBED HEREIN. THE SPECIMEN COMPLIED WITH THE SPECIFICATION REQUIREMENTS. THE ENCLOSED DATA IS PRESENTED FOR YOUR EVALUATION.

Enclosures: Data Sheets (1 Pages)

STATE OF CALIFORNIA
COUNTY OF LOS ANGELES } ss.

C. D. YIAKAS, being duly sworn, deposes and says: That the information contained in this report is the result of complete and carefully conducted tests and is to the best of his knowledge true and correct in all respects.

SUBSCRIBED and sworn to before me this 18 day of JAN., 19 73

OFFICIAL SEAL
William H. Vanderberg, Jr.
NOTARY PUBLIC-CALIFORNIA
PRINCIPAL OFFICE IN
LOS ANGELES COUNTY
My Commission Expires June 24, 1974

W-781

DEPARTMENT MECHANICAL SYSTEMS

TEST ENGINEER A. D. SNOW

TEST WITNESS

NOT APPLICABLE
DCAS-QAR VERIFICATION

QUALITY CONTROL

DATA SHEET

Test Title: PROOF PRESSURE

Customer: ASSOCIATED MACHINE CO.

Part No. 1162200

S/N 1

Spec. AM1162200 Rev.

Para. 4.1

Job. No. 53294

Date Test Started 1/11/73

Date Test Completed 1/11/73

Amb. Temp. 70±15F

Photo No

Test Med. MIL-H-5606

Specimen Temp. ROOM AMBIENT

Specimen ACTUATOR

SPECIFICATION REQUIREMENTS

SUBJECT THE SPECIMEN TO A HYDRAULIC PROOF PRESSURE OF 4500 PSIG. RECORD ANY EVIDENCE OF EXTERNAL LEAKAGE, DAMAGE OR DEFORMATION.

PROCEDURE AND RESULTS

THE SPECIMEN'S PRESSURE AND RETURN PORTS WERE SIMULTANEOUSLY PRESSURIZED TO 4500 PSIG WITH MIL-H-5606 HYDRAULIC FLUID. THE TEST PRESSURE WAS MAINTAINED FOR A MINIMUM DURATION OF TWO MINUTES DURING WHICH TIME THE SPECIMEN WAS MONITORED FOR EVIDENCE OF EXTERNAL LEAKAGE. THE TEST PRESSURE WAS THEN REDUCED TO ZERO PSIG AND THE SPECIMEN WAS VISUALLY EXAMINED.

THERE WAS NO EXTERNAL LEAKAGE. THERE WAS NO APPARENT DAMAGE OR DEFORMATION.

TEST EQUIPMENT

PRESS. GAUGE	0-5000 PSI	W/N 3552	CAL. DUE 2-10-73
TIMER	0- 60 MIN	W/N 6155	CAL. DUE 2-18-73

Tested By [signature]

Witness _____ Date: _____

Sheet No. _____ of _____

Approved [signature] Date: _____

Specimen Meets Spec. Requirements YES ☒ NO ☐

Q. C. Form Approval [signature]

W 614 A

NOTICE OF DEVIATION

WYLE LABORATORIES

RECEIVED SACRAMENTO JAN 22 10 12 AM

TEST REPORT NO.	PAGE
WYLE JOB NO.	53294
NOD NO.	1
PO NO.	6707-7082
DATE	1/11/73
GOV'T. CONT. NO.	

TO: ASSOCIATED MACHINE CO.

ATTN: MR. H. J. ZITZER

PART NAME: ACTUATOR

PART NO. 1162200 SERIAL NO. 1

TEST: FUNCTIONAL

SPECIFICATION AM 1162200 PARAGRAPH NO. 4.0

NOTIFICATION MADE TO: H.J. ZITZER DCAS — QAR No

DATE 1/11/73 BY A. SNOW VIA WITNESS

SPECIFICATION REQUIREMENTS:

NO SPECIFICATION REQUIREMENTS.

THIS NOTICE OF DEVIATION ISSUED FOR INFORMATION ONLY.

DESCRIPTION OF DEVIATION:

THE FOLLOWING ANOMALIES WERE ENCOUNTERED DURING THE FUNCTIONAL TESTING OF THE SPECIMEN.

(1) THE LINEAR POTENTIOMETER EXHIBITED AN ERRATIC CIRCUIT BETWEEN PINS "E" AND "F". THE MAXIMUM TRAVEL INDICATED WAS FIVE INCHES.

(2) INTERNAL LEAKAGE THROUGH THE SPECIMEN WAS SO GREAT THAT IT COULD NOT BE MEASURED WITH A GRADUATED CYLINDER.

(3) SERVO VALVE DID NOT FUNCTION PROPERLY.

(4) ACTUATOR WOULD NOT EXTEND WITH 3000 PSIG APPLIED TO THE INLET PORT.

SPECIMEN DISPOSITION: STOP TESTING AND RETURN TO CUSTOMER.

COMMENTS - RECOMMENDATIONS:

TEST WITNESS: TEST ENGINEER

REPRESENTING DEPT. MANAGER

QUALITY CONTROL

DISTRIBUTION:
ORIGINAL: QUALITY CONTROL
( ) COPIES: CUSTOMER
1 COPY: JOB CONTROL
1 COPY: WHITE FOLDER
1 COPY: GREEN FOLDER
1 COPY: CONTRACTS
( ) COPIES: DCAS — QAR

WL-109A

QC Form Approval