N73-20138

STUDY OF DESIGN AND CONTROL OF REMOTE MANIPULATORS PART II

VIBRATION CONSIDERATIONS IN MANIPULATOR DESIGN

Wayne J. Book

CASE FILE COPY

DSR 73784-2

February 15, 1973

Engineering Projects Laboratory
Department of Mechanical Engineering
Massachusetts Institute of Technology

NASA Contract NAS8-28055
Marshall Space Flight Center
Wilbur G. Thorton, Contract Monitor

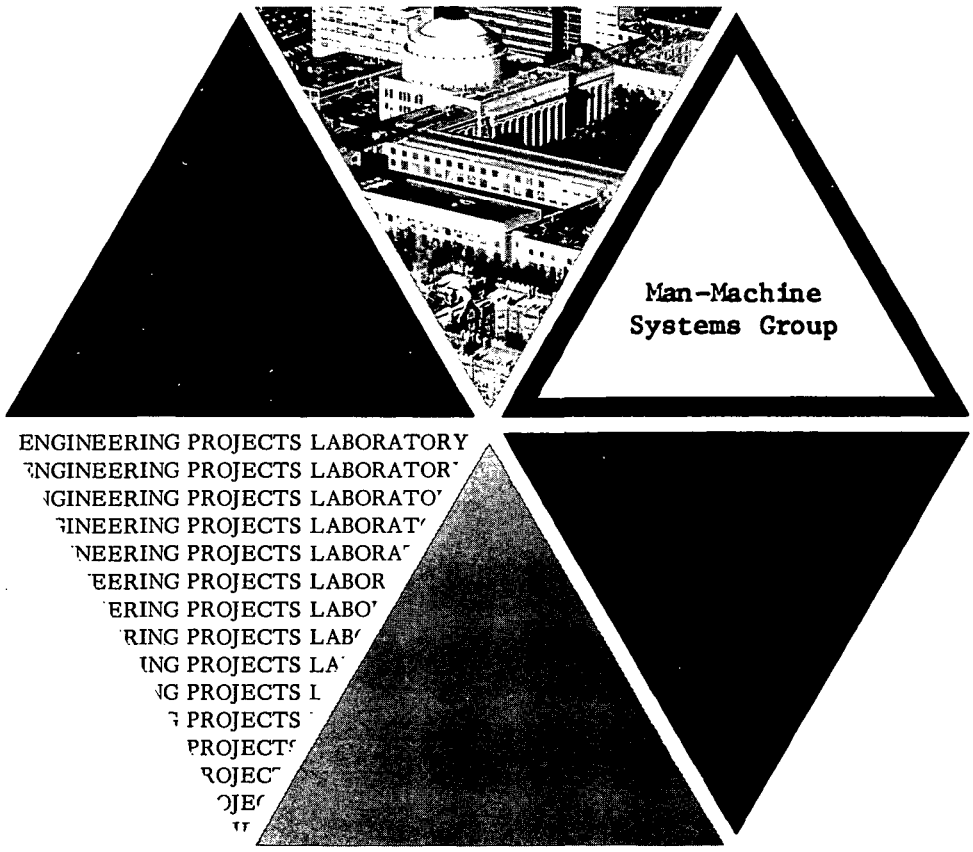

Final Report on NASA Contract NAS8-28055

Study of Design and Control of Remote Manipulators

Part II

Vibration Considerations in Manipulator Design

by

Wayne J. Book

Prepared by Department of Mechanical Engineering
Massachusetts Institute of Technology
Cambridge, Massachusetts 02139

For George C. Marshall Space Flight Center, NASA
Marshall Space Flight Center, Alabama 35812

February 15, 1973

Vibration Considerations in Manipulator Design

by

Wayne J. Book

Abstract

In the second quarterly report of Contract NAS8-28055 a mathematical procedure using 4x4 transformation matrices for analyzing the vibrations of flexible manipulators was reported and applied to a specific example. This report summarizes the previous work and extends the method to include flexible joints as well as links, and to account for the effects of various power transmission schemes. A systematic study of the allocation of structural material and the placement of components such as motors and gearboxes has been undertaken using the tools developed. As one step in this direction the variables which relate the vibration parameters of the arm to the task and environment of the arm have been isolated and non-dimensionalized. In this manner one is able to reduce the number of variables and yet hepefully retain an intuitive feel for the problem. This effort is being continued as a general problem, making reasonable assumptions as to the configuration and parameter ranges which are of interest to further reduce the large number of variables and arrive at a meaningful design tradeoff study. It is desirable at some future point to consider a more specific case, whether this case is established by NASA or assumed by the investigators.

The 4x4 transformation matrices have also been used to develop analytical expressions for the terms of the complete 6x6 compliance matrix for the case of two flexible links joined by a rotating joint, flexible about its axis of rotation. This seems to be the most frequently re-curring configuration. The availability of these analytical expressions in terms of the link and joint parameters will circumvent the numerical evaluation of these terms in further studies of this case.

The Compliance of Jointed Beams-Practical Matrix Approach

Manipulator arms are subject to deflection under loads and to vibrations about an equilibrium position when the loading on the arm is suddenly changed. The deflections deteriorate end point accuracy as computed from joint positions and the vibrations can seriously deteriorate the response of the arm, and the ability of an operator to perform desired maneuvers. The following is a method for analyzing the deflection of an arm under given loading conditions. The arm compliance matrix is arrived at giving three displacements and three rotations as a linear function of the applied forces and moments. The method can be used to evaluate the bending of the arm segments and flexible joints as well. If the compliance matrix is nonsingular it can be inverted to yield a spring constant matrix and hence forces end moments as a function of displacements and rotations. The motion of a lumped mass spring system can be described by a linear differential equation using these spring constants. The validity of this approximation for an arm vibrating about an equilibrium position depends largely on how well the mass involved can be lumped into a reasonable number of masses. It is less seriously limited by a small amplitude assumption, the assumption of negligible damping (only second order effects on the natural frequency), and the assumptions that the joint angles are not changing. When the mass of the payload is large compared to the mass of the arm the approximation is very good.

The Mechanics of Arm Deflection

Consider an arm in static equilibrium with the forces and moments on its two ends as is shown in Figure 1. Initially we will assume

1) the mass of the arm can be lumped for purposes of vibration studies
2) the arm joints are rigid
3) the arms segments are simple beams

When loads are applied to the ends of the arm the individual arm segments deform according to the forces and moments placed on them by the neighboring segments. When these forces are expressed in terms of a coordinate system which has one axis coincident with the neutral axis of the beam as shown in Fig. 2, the deflections over the length of the segment are simply obtained. Each of the deflections and angles along the three mutually perpendicular directions is a linear function of at most two of the loads. Notice that one end of the beam is assumed at the zero position:

$$\Delta X = \alpha_C \; F_X$$

$$\Delta Y = \alpha_{YF} \; F_Y + \alpha_{YM} \; M_Z$$

$$\Delta Z = \alpha_{ZF} \; F_Z - \alpha_{ZM} \; M_Y$$

Eq. 1

$$\theta_X = \alpha_T M_X$$

$$\theta_Y = -\alpha_{\theta_Y F} \; F_Z + \alpha_{\theta_Y M} \; M_Y$$

$$\theta_Z = \alpha_{\theta_Z F} \; F_Y + \alpha_{\theta_Z M} \; M_Z$$

For a beam whose cross section is symmetric about the Y and Z axes $\alpha_{YF} = \alpha_{ZF}$ and will be denoted α_{XF}. This will be the only case specifically considered. The development which follows could retain the extra subscript at some loss in readability. The simplification in notation is as follows:

$$\alpha_{XF} = \alpha_{YF} = \alpha_{ZF}$$

$$\alpha_{XM} = \alpha_{YM} = \alpha_{ZM}$$

$$\alpha_{\theta F} = \alpha_{\theta_Y F} = \alpha_{\theta_Z F}$$

$$\alpha_{\theta M} = \alpha_{\theta_Y M} = \alpha_{\theta_Z M}$$

Beam theory additionally requires that $\alpha_{XM} = \alpha_{\theta F}$. Determining the end displacement is a matter of summing the displacements of the individual segments and in accounting for the displacement due to end point rotations at a distance from the end of the segment where the rotation is calculated. For numerous arbitrary joint angles this becomes a complex bookkeeping task. The matrix procedure which is developed here automatically performs this task.

Transformation of Coordinates Using 4 x 4 Matrices

We are interested in a transformation between two coordinate systems whose origins are displaced from one another and whose axes are not parallel, as in Fig. 3. The position of point P is described in terms of coordinate system 2 by the vector $\underline{X}_2$. Given the vector $(\underline{X}_0)_1$ from O_1 to O_2 and the angles between the axes (or lines parallel to them), we desire to find the vector from O_1 to P. This vector is easily found by the following matrix multiplication:

$$\text{Eq. 3} \quad \begin{bmatrix} 1 \\ X_1 \\ Y_1 \\ Z_1 \end{bmatrix} = \begin{bmatrix} 1 & 0 & 0 & 0 \\ (X_0)_1 & \cos(X_2, X_1) & \text{Cos}(Y_2, X_1) & \text{Cos}(Z_2, X_1) \\ (Y_0)_1 & \cos(X_2, Y_1) & \text{Cos}(Y_2, Y_1) & \text{Cos}(Z_2, Y_1) \\ (Z_0)_1 & \cos(X_2, Z_1) & \text{Cos}(Y_2, Z_1) & \text{Cos}(Z_2, Z_1) \end{bmatrix} \begin{bmatrix} 1 \\ X_2 \\ Y_2 \\ Z_2 \end{bmatrix}$$

$$\text{or} \quad \begin{bmatrix} 1 \\ \hline \underline{X}_1 \end{bmatrix} = \left[\begin{array}{c|c} 1 & \underline{0}^T \\ \hline (\underline{X}_0)_1 & R_{21} \end{array}\right] \begin{bmatrix} 1 \\ \hline \underline{X}_2 \end{bmatrix}$$

The cosine terms are the cosines of the angles between intersecting lines parallel to the indicated axes. The sign convention is arbitrary for these angles since the cosine is an even function.

We are interested in coordinate transformations of two special types. One of these is the transformation due to joint angles and displacements.

The other transformation is due to the deflection of arm segments under loading. The former has been described for both rotating and sliding joints by J. Denavit and R. S. Hartenberg (1)* in terms of four independent parameters. The transformation for simple beam flexure, compression, and torsion will be developed in this paper.

Transformation of Coordinates Due to Elastic Deformation

The information we seek is the displacement and rotation of an arm, or more generally a jointed beam, due to the application of loads. The end of the beam can be described in a fixed reference coordinate system if one knows the transformation between the coordinate systems which are fixed to the individual segments. As seen in Fig. 4 the point p at the end of the beam can be described by two transformations, represented by two 4 x 4 matrices. The transformation A_i relates system i', the end point before deflection, to system i-1. The transformation E_i relates system i to system i'.

Eq 4 $$\begin{bmatrix} 1 \\ \hline \underline{X}_{i',\, i-1} \end{bmatrix} = A_i\, E_i \begin{bmatrix} 1 \\ \hline \underline{X}_{i,\, i} \end{bmatrix} = A_i\, E_i \begin{bmatrix} 1 \\ \underline{0} \end{bmatrix}$$

where: $\underline{X}_{i,\, i-1}$ = the position of the origin of system i in terms of system i-1

A_i = transformation with no deflection

E_i = transformation due to deflection

$\underline{0}$ a 3 x 1 vector whose elements are zero

$\underline{X}_{i,i}$ = location of point p in i coordinates = origin of i in this case

* A reader consulting this paper should be aware of the fact that α_1 in that paper is defined with opposite sign convention of this paper and later papers by Denavit and Hartenberg.

(1) J. Denavit and R. S. Hartenberg; "A Kinematic Notation for Lower-Pair Mechanisms Based on Matrices" Journal of Applied Mechanics June 1955 pp 215-221.

Any number of these transformations may be combined by multiplying the transformation matrices. In terms of the reference system 0, the end of a beam with N joints is located at $\underline{X}_{No}$ as is given by:

$$\text{Eq 5} \qquad \begin{bmatrix} 1 \\ \hline \underline{X}_{N,o} \end{bmatrix} = A_1 \, E_1 \, A_2 \cdots A_i \, E_i \cdots A_N \, E_N \begin{bmatrix} 1 \\ \hline \underline{0} \end{bmatrix}$$

We would like the variation of this position vector due to applied forces and moments. First the elements of the E matrices must be found. From Eq 3

$$\text{Eq 6} \qquad E_i = \begin{bmatrix} 1 & 0 & 0 & 0 \\ (X_0)_{i'} & \cos(X_i, X_{i'}) & \cos(Y_i, X_{i'}) & \cos(Z_i, X_{i'}) \\ (Y_0)_{i'} & \cos(X_i, Y_{i'}) & \cos(Y_i, Y_{i'}) & \cos(Z_i, Y_{i'}) \\ (Z_0)_{i'} & \cos(X_i, Z_{i'}) & \cos(Y_i, Z_{i'}) & \cos(Z_i, Z_{i'}) \end{bmatrix}$$

For small deflections and small angles the elements of this matrix simplify as follows:

$$\text{Eq 7} \qquad E_i = \begin{bmatrix} 1 & 0 & 0 & 0 \\ \Delta X & 1 & \cos(90 + \theta_Z) & \cos(90 - \theta_Y) \\ \Delta Y & \cos(90 - \theta_Z) & 1 & \cos(90 + \theta_X) \\ \Delta Z & \cos(90 + \theta_Y) & \cos(90 - \theta_X) & 1 \end{bmatrix}$$

where θ_X, θ_Y and θ_Z are the angles of rotation about the X, Y and Z axes respectively. For small angles the angles behave very nearly as vectors, thus the order of occurance is irrelevant. Furthermore the small angle assumption allows further simplification to

$$E_i = \begin{bmatrix} 1 & 0 & 0 & 0 \\ \Delta X & 1 & -\theta_Z & \theta_Y \\ \Delta Y & \theta_Z & 1 & -\theta_X \\ \Delta Z & -\theta_Y & \theta_X & 1 \end{bmatrix} \qquad \text{Eq 8}$$

But these elements were expressed in terms of forces and moments in Eq. 1. Thus E_i may be expressed as

$$E_i = \left[\begin{array}{c|c|c|c} 1 & 0 & 0 & 0 \\ \alpha_C F_{Xii} & 1 & -\alpha_{\theta Fi} F_{Yii} - \alpha_{\theta Mi} M_{Zii} & -\alpha_{\theta Fi} F_{Zii} + \alpha_{\theta Mi} M_{Yii} \\ \alpha_{XFi} F_{Yii} + \alpha_{XMi} M_{Zii} & \alpha_{\theta Fi} F_{Yii} + \alpha_{\theta Mi} M_{Zii} & 1 & -\alpha_{Ti} M_{Xii} \\ \alpha_{XFi} F_{Zii} - \alpha_{XMi} M_{Yii} & \alpha_{\theta Fi} F_{Zii} - \alpha_{\theta Mi} M_{Yii} & \alpha_{Ti} M_{Xii} & 1 \end{array}\right] \qquad \text{Eq 9}$$

where

F_{Xii}, F_{Yii}, F_{Zii} = Forces at the end of beam i, in terms of coordinate system i

M_{Xii}, M_{Yii}, M_{Zii} = Moments at the end of beam i, in terms of coordinate system i

Now one must determine the forces and moments on segment i which result from the loads on the end of the beam. This is done in the following section:

Equilibrium Forces on the Arm Segments

A free body diagram of the beam segments between coordinate system i and system N is shown in Figure 5. Equilibrium requires:

Eq 10

a) $\sum \underline{F} = 0 = R_{0i}\,\underline{F}_{No} - \underline{F}_{ii}$

b) $\sum M_i = 0 = R_{0i}\,\underline{M}_{No} + r_{ii} \times R_{0i}\,\underline{F}_{No} - \underline{M}_{ii}$

where: $\underline{r}_{ii}$ = the vector from system i to the end of the arm in terms of system i

$\underline{F}_{ii}$ = the force vector acting on the beam to the left of system i in Figure 5, expressed in system i

$\underline{M}_{ii}$ = the moment vector acting on the beam to the left of system i in Figure 5, expressed in system i

R_{0i} = 3 x 3 rotation matrix from system 0 to system i

$\underline{F}_{No}$ = applied force at the end of segment N, expressed in base coordinate frame

$\underline{M}_{No}$ = applied moment expressed in the base frame

Vectorially eq (10) may be expressed as

Eq 11
$$\left[\begin{array}{c} \underline{F}_{ii} \\ \hline \underline{M}_{ii} \end{array}\right] = \left[\begin{array}{c|c} R_{0i} & 0 \\ \hline \underline{r}_{ii} \times R_{0i} & R_{0i} \end{array}\right] \left[\begin{array}{c} \underline{F}_{No} \\ \hline \underline{M}_{No} \end{array}\right]$$

where $\underline{r}_{ii} \times R_{0i}$ may be represented by the matrix multiplication

$$\underline{r}_{ii} \times R_{0i} = \begin{bmatrix} 0 & -r_{Zii} & r_{Yii} \\ r_{Zii} & 0 & -r_{Xii} \\ -r_{Yii} & r_{Xii} & 0 \end{bmatrix} R_{0i}$$

In the above manner we can obtain the forces on the arm segments resulting from the loads on the end of the arm. It remains to evaluate the deflection of the arm by using these values in conjunction with the transformation matrices.

Arm Deflection with Load

Having described the position of the end of the arm (after loading has been placed on the end of the arm) by the coordinate transformation, one could subtract from this vector the vector describing the position of the arm before loading as in equation 13. Theoretically this would be correct.

$$\text{Eq 13} \quad \Delta \underline{X} = \left[\left(\Delta_1 E_1 A_2 E_2 \ldots E_{N-1} A_N E_N\right) - A_1 A_2 \ldots A_N\right)\right]\left[\frac{1}{\underline{0}}\right]$$

In practice the difference of these two vectors will be much smaller than the vectors themselves, leading to inaccuracies when the calculation is carried out with two few significant digits. A more practical way is to evaluate the partial derivative of the position of the end with respect to end point loads, for example F_{XNO} and M_{XNO}

$$\text{Eq 14a} \quad \frac{\partial \underline{X}_{NO}}{\partial F_{XNO}} = \frac{\partial}{\partial F_{XNO}} \left(\left[A_1 E_1 A_2 E_2 \ldots A_N E_N\right]\left[\frac{1}{\underline{0}}\right]\right)$$

$$\text{Eq 14b} \quad \frac{\partial \underline{X}_{NO}}{\partial M_{XNO}} = \frac{\partial}{\partial M_{XNO}} \left(\left[A_1 E_1 A_2 E_2 \ldots A_N E_N\right]\left[\frac{1}{\underline{0}}\right]\right)$$

One will now recall the assumption that the joints remain rigid. Because of this:

$$\frac{\partial A_i}{\partial F_{XNO}} = \frac{\partial A_i}{\partial M_{XNO}} = 0 \qquad i = 1, 2, \ldots, N$$

If one found that this assumption was not valid it would be relatively simple to evaluate these partial derivatives and include joint flexibility.

By the chain rule

Eq 16 $$\frac{\partial \underline{X}_{NO}}{\partial F_{XNO}} = A_1 \frac{\partial E_1}{\partial F_{XNO}} (A_2 E_2 \cdots A_N E_N) \left[\frac{1}{\underline{0}}\right] +$$

$$A_1 E_1 \frac{\partial}{\partial F_{XNO}} (A_2 E_2 \cdots A_N E_N) \left[\frac{1}{\underline{0}}\right]$$

Continuing this differentiation one eventually arrives at: (for example)

Eq 17a $$\frac{\partial \underline{X}_{NO}}{\partial F_{XNO}} = \left[\sum_{i=1}^{N} A_1 E_1 \ldots A_i \frac{\partial}{\partial F_{XNO}} E_i A_{i+1} \ldots A_N E_N\right]\left[\frac{1}{\underline{0}}\right]$$

and similarly for the other force components, as well as for the moments: (for example)

Eq 17b $$\frac{\partial \underline{X}_{NO}}{\partial M_{XNO}} = \left[\sum_{i=1}^{N} A_1 E_1 \ldots A_i \frac{\partial E_i}{\partial M_{XNO}} A_{i+1} \ldots A_N E_N\right]\left[\frac{1}{\underline{0}}\right]$$

Then deflections are obtained as $\Delta \underline{X}_{NO} = \frac{\partial \underline{X}_{NO}}{\partial F_{XNO}} \Delta F_{XNO}$ (17c) for example.

In order to proceed we must evaluate

$$\frac{\partial E_i}{\partial F_{XNO}}, \frac{\partial E_i}{\partial F_{YNO}}, \frac{\partial E_i}{\partial F_{ZNO}}, \frac{\partial E_i}{\partial M_{XNO}}, \frac{\partial E_i}{\partial M_{YNO}} \text{ and } \frac{\partial E_i}{\partial M_{ZNO}}$$

To do this we take the derivative of the individual elements of Eq. 9 as follows:

Eq 18 $$\frac{\partial E_i}{\partial F_{XNO}} = \left[\begin{array}{c|c|c|c} 0 & 0 & 0 & 0 \\ \alpha_C \dfrac{\partial F_{Xii}}{\partial F_{XNO}} & 0 & -(\ ) & -(\ ) \\ \alpha_{XFi} \dfrac{\partial F_{Yii}}{\partial F_{XNO}} + \alpha_{XMi} \dfrac{\partial M_{Zii}}{\partial F_{XNO}} & \alpha_{\theta Fi} \dfrac{\partial F_{Yii}}{\partial F_{XNO}} + \alpha_{\theta Mi} \dfrac{\partial M_{Zii}}{\partial F_{XNO}} & 0 & -(\ ) \\ \alpha_{XFi} \dfrac{\partial F_{Zii}}{\partial F_{XNO}} - \alpha_{XMi} \dfrac{\partial M_{Yii}}{\partial F_{XNO}} & \alpha_{\theta Fi} \dfrac{\partial F_{Zii}}{\partial F_{XNO}} - \alpha_{\theta Mi} \dfrac{\partial M_{Yii}}{\partial F_{XNO}} & \alpha_T \dfrac{\partial F_{Xii}}{\partial F_{XNO}} & 0 \end{array}\right]$$

Similarly for F_{YNO}, F_{ZNO}, M_{XNO}, M_{YNO}, and M_{ZNO}. Note that the derivative of the rotation submatrix is antisymmetric

There is but one thing left to evaluate, that is

$$\frac{\partial \underline{F}_{ii}}{\partial \underline{F}_{NO}}, \frac{\partial \underline{F}_{ii}}{\partial \underline{M}_{NO}}, \frac{\partial \underline{M}_{ii}}{\partial \underline{F}_{NO}} \text{ and } \frac{\partial \underline{M}_{ii}}{\partial \underline{M}_{NO}}.$$ Referring to Eq. 11

it is seen that these partial derivatives are readily evaluated if one assumes that R_{Oi} and $\underline{r}_{ii} \times R_{Oi}$ are essentially independent of the loading, which they are to first order. Then

Eq 19 $$\frac{\partial}{\partial F_{XNO}} \begin{bmatrix} \underline{F}_{ii} \\ \hline \underline{M}_{ii} \end{bmatrix} = \left[\begin{array}{c|c} R_{Oi} & 0 \\ \hline \underline{r}_{ii} \times R_{Oi} & R_{Oi} \end{array}\right] \begin{bmatrix} 1 \\ 0 \\ 0 \\ 0 \\ 0 \\ 0 \end{bmatrix}$$

In general

Eq 20
$$\begin{bmatrix} \underline{F}_{ii} \\ \hline \underline{M}_{ii} \end{bmatrix} \begin{bmatrix} \frac{\partial}{\partial F_{XNO}} & \frac{\partial}{\partial F_{YNO}} & \frac{\partial}{\partial F_{ZNO}} & \frac{\partial}{\partial M_{XNO}} & \frac{\partial}{\partial M_{YNO}} & \frac{\partial}{\partial M_{ZNO}} \end{bmatrix}$$

$$= \left[\begin{array}{c|c} R_{Oi} & 0 \\ \hline \underline{r}_{ii} \times R_{Oi} & R_{Oi} \end{array}\right]$$

These values can be substituted into Equation 18 to yield the derivative of the elastic deflection transformation matrix with respect to the end of arm loads. It has already been pointed out how the displacements are computed using these transformations. The next section will show how to arrive at the rotation of the end of the arm due to the loads.

End Point Rotations Under Loads

One would also like to know how the end of the arm rotates with applied forces and moments, i.e., determine the elements in the 6x3 matrix C_θ.

Eq 21
$$C_\theta = \begin{bmatrix} \frac{\partial}{\partial F_{XNO}} \\ \frac{\partial}{\partial F_{YNO}} \\ \frac{\partial}{\partial F_{ZNO}} \\ \frac{\partial}{\partial M_{XNO}} \\ \frac{\partial}{\partial M_{YNO}} \\ \frac{\partial}{\partial M_{ZNO}} \end{bmatrix} \begin{bmatrix} \theta_{XNO} & \theta_{YNO} & \theta_{ZNO} \end{bmatrix}$$

Most of the work to obtain these terms has already been done. It remains for us to recognize the result and transform it into the proper coordinates. What we have done up to now is to take the derivative of the equation

Eq 22(a) $$\begin{bmatrix} 1 \\ \hline \underline{X}_{NO} \end{bmatrix} = A_1 E_1 A_2 E_2 \; . \; . \; . \; A_N E_N \begin{bmatrix} 1 \\ \hline \underline{X}_{N,N} \end{bmatrix}$$

with respect to forces and moments applied to the arm. It was assumed in Eqs. 4 and 5 that the force was applied at the origin of the Nth coordinate system, which was also the endpoint of the arm; thus $\underline{X}_{N,N} = 0$. Let us use a general nonzero $\underline{X}_{N,N}$ and rewrite Eq. 22 as

Eq 22(b) $$\begin{bmatrix} 1 \\ \hline \underline{X}_{NO} \end{bmatrix} = \begin{bmatrix} 1 & 0 & 0 & 0 \\ (X_0)_{NO} & \cos(X_N,X_0) & \cos(Y_N,X_0) & \cos(Z_N,X_0) \\ (Y_0)_{NO} & \cos(X_N,Y_0) & \cos(Y_N,Y_0) & \cos(Z_N,Y_0) \\ (Z_0)_{NO} & \cos(X_N,Z_0) & \cos(Y_N,Z_0) & \cos(Z_N,Z_0) \end{bmatrix} \begin{bmatrix} 1 \\ \hline \underline{X}_{NN} \end{bmatrix}$$

which is the same as

Eq 22(c) $$\begin{bmatrix} 1 \\ \hline \underline{X}_{NO} \end{bmatrix} = \left[\begin{array}{c|c} 1 & \underline{0}^T \\ \hline (\underline{X}_0)_{NO} & R_{NO} \end{array}\right] \begin{bmatrix} 1 \\ \hline \underline{X}_{NN} \end{bmatrix}$$

Here $(\underline{X}_0)_{NO}$ is the vector from the origin of system 0 to the origin of system N, expressed in system 0 coordinates, while $\underline{X}_{NN}$ is the vector from the origin of system N to the point of application of the load, expressed in N coordinates.

Now we express the vector $\underline{X}_{NN}$ in coordinate system N' whose axes are parallel to the axes of system zero before loading but has the same origin as system N. (See Fig. 6.) The components of this new vector $\underline{X}_{NN'}$ are found from the expression:

Eq 23 $$\underline{X}_{NN'} = R_{NN'} X_{NN}$$

Now

Eq 24
$$\left[\begin{array}{c}1\\ \hline \underline{X}_{NO}\end{array}\right] = \left[\begin{array}{c|c}1 & \underline{0}^T \\ \hline (\underline{X}_O)_{NO} & R_{NO}\end{array}\right]\left[\begin{array}{c|c}1 & \underline{0}^T \\ \hline \underline{0} & R_{N'N}\end{array}\right]\left[\begin{array}{c}1\\ \hline \underline{X}_{NN'}\end{array}\right]$$

$$= \left[\begin{array}{c|c}1 & \underline{0}^T \\ \hline (\underline{X}_O)_{NO} & R_{N'O}\end{array}\right]\left[\begin{array}{c}1\\ \hline \underline{X}_{NN'}\end{array}\right]$$

Since the O and N' axes after loading are nearly parallel, for small deflections $\cos(90-\theta_{ZNO}) \cong \theta_{ZNO}$ etc. and simplifications can be made as follows

Eq 25
$$R_{N'O} = \begin{bmatrix} 1 & -\theta_{ZNO} & \theta_{YNO} \\ \theta_{ZNO} & 1 & -\theta_{XNO} \\ -\theta_{YNO} & \theta_{XNO} & 1 \end{bmatrix}$$

Thus to get the partial of the angles θ above with respect to a force or moment, say $\underline{F}_{XNO}$ one must simply multiply as follows

Eq 26
$$\frac{\partial}{\partial F_{XNO}}\begin{bmatrix} 1 & 0 & 0 & 0 \\ X_{NO} & 1 & -\theta_{ZNO} & \theta_{YNO} \\ Y_{NO} & \theta_{ZNO} & 1 & -\theta_{XNO} \\ Z_{NO} & -\theta_{YNO} & \theta_{XNO} & 1 \end{bmatrix} = \frac{\partial}{\partial F_{XNO}}\,[A_1E_1A_2\ldots A_NE_N]\begin{bmatrix} 1 & \underline{0}^T \\ \underline{0} & R_{N'N} \end{bmatrix}$$

For small deflections $R_{N'N} \cong R_{ON}$ evaluated before loading from only the joint angles.

Compliance Matrix and Spring Constant Matrix

Now we are able to piece together the above derivation to reach our original goal: a compliance matrix of the arm under force. Equations 16, 17 and 26 are evaluated (as well as the similar equations for the other forces and moments) and one can construct the following matrix equation.

$$\text{Eq 27a)}\quad \begin{bmatrix} \Delta X \\ \Delta Y \\ \Delta Z \\ \Delta\theta X \\ \Delta\theta Y \\ \Delta\theta Z \end{bmatrix}_{NO} = \begin{bmatrix} \frac{\partial X}{\partial F_X} & \frac{\partial X}{\partial F_Y} & \frac{\partial X}{\partial F_Z} & \frac{\partial X}{\partial M_X} & \frac{\partial X}{\partial M_Y} & \frac{\partial X}{\partial M_Z} \\ \frac{\partial Y}{\partial F_X} & \frac{\partial Y}{\partial F_Y} & \frac{\partial Y}{\partial F_Z} & \frac{\partial Y}{\partial M_X} & \frac{\partial Y}{\partial M_Y} & \frac{\partial Y}{\partial M_Z} \\ \frac{\partial Z}{\partial F_X} & \frac{\partial Z}{\partial F_Y} & \frac{\partial Z}{\partial F_Z} & \frac{\partial Z}{\partial M_X} & \frac{\partial Z}{\partial M_Y} & \frac{\partial Z}{\partial M_Z} \\ \frac{\partial\theta X}{\partial F_X} & \frac{\partial\theta X}{\partial F_Y} & \frac{\partial\theta X}{\partial F_Z} & \frac{\partial\theta X}{\partial M_X} & \frac{\partial\theta X}{\partial M_Y} & \frac{\partial\theta X}{\partial M_Z} \\ \frac{\partial\theta Y}{\partial F_X} & \frac{\partial\theta Y}{\partial F_Y} & \frac{\partial\theta Y}{\partial F_Z} & \frac{\partial\theta Y}{\partial M_X} & \frac{\partial\theta Y}{\partial M_Y} & \frac{\partial\theta Y}{\partial M_Z} \\ \frac{\partial\theta Z}{\partial F_X} & \frac{\partial\theta Z}{\partial F_Y} & \frac{\partial\theta Z}{\partial F_Z} & \frac{\partial\theta Z}{\partial M_X} & \frac{\partial\theta Z}{\partial M_Y} & \frac{\partial\theta Z}{\partial M_Z} \end{bmatrix}_{NO} \cdot \begin{bmatrix} F_X \\ F_Y \\ F_Z \\ M_X \\ M_Y \\ M_Z \end{bmatrix}_{NO}$$

or

$$\text{Eq 27b)}\quad \begin{bmatrix} \Delta\underline{X} \\ \hline \Delta\underline{\theta} \end{bmatrix}_{NO} = C_{NO} \begin{bmatrix} \underline{F} \\ \hline \underline{M} \end{bmatrix}_{NO}$$

The subscripts on the matrices are understood to apply to each element. Due to the nature of the problem the matrix C_{NO} will be symmetric. The inverse of the matrix C_{NO} will be the spring constant matrix K_{NO} and

Eq 28
$$\begin{bmatrix} \underline{F} \\ \hline \underline{M} \end{bmatrix}_{NO} = C_{NO}^{-1} \begin{bmatrix} \Delta\underline{X} \\ \hline \Delta\underline{\theta} \end{bmatrix}_{NO} = K_{NO} \begin{bmatrix} \Delta\underline{X} \\ \hline \Delta\underline{\theta} \end{bmatrix}_{NO}$$

C_{NO} will be nonsingular for all physical cases. For some arm configurations and parameters the inverse may require excessive accuracy, and hence be uncalculable. In this case one must eliminate one or more of the directions from consideration to get an invertible matrix.

Linear Beam Vibrations

Up until this point we have been considering the displacements of and loads on a static beam. If one considers a rigid mass and inertia placed at the loading point of the beam, the forces and moments on that mass are the negative of the forces and moments on the beam. These forces and moments can be determined from the spring constant matrix and the deviation of the mass from the equilibrium position. Since structural damping is small, the natural frequency of the spring-mass system as well as the amplitude ratios of the various modes of vibration can be determined. Nonlinearities such as Coriolis accelerations and centripital accelerations can be neglected for angular velocities which are appropriately small. This seems to be the case in practical arm problems with small vibrations. The equations of motion are then written as

Eq 29
$$\begin{bmatrix} M & 0 & 0 & 0 & 0 & 0 \\ 0 & M & 0 & 0 & 0 & 0 \\ 0 & 0 & M & 0 & 0 & 0 \\ 0 & 0 & 0 & I_{XX} & I_{XY} & I_{XZ} \\ 0 & 0 & 0 & I_{XY} & I_{YY} & I_{YZ} \\ 0 & 0 & 0 & I_{XZ} & I_{YZ} & I_{ZZ} \end{bmatrix} \frac{d^2}{dt^2} \begin{bmatrix} \Delta\underline{X} \\ \hline \Delta\underline{\theta} \end{bmatrix}_{NO} = -K_{NO} \begin{bmatrix} \Delta\underline{X} \\ \hline \Delta\underline{\theta} \end{bmatrix}_{NO}$$

where: M = the lumped mass at the end of the arm

I_{XX}, I_{YY}, I_{ZZ} = the mass moments of inertia of the lumped inertia at the end of the arm about axes parallel to the reference axes but through the center of mass

I_{XY}, I_{XZ}, I_{YZ} = the cross moments of inertia about axes parallel to the reference axes but through the center of mass.

For convenience Eq 29 will be rewritten as

$$J_{NO} \frac{d^2}{dt^2} \begin{bmatrix} \Delta \underline{X} \\ \Delta \underline{\theta} \end{bmatrix}_{NO} = - K_{NO} \begin{bmatrix} \Delta \underline{X} \\ \Delta \underline{\theta} \end{bmatrix}$$

This can be written in state variable form as

$$\text{Eq 31} \qquad \frac{d}{dt} \begin{bmatrix} \Delta \underline{X} \\ \Delta \underline{\theta} \\ \Delta \dot{\underline{X}} \\ \Delta \dot{\underline{\theta}} \end{bmatrix} = \begin{bmatrix} 0 & I \\ -J^{-1} K & 0 \end{bmatrix} \begin{bmatrix} \Delta \underline{X} \\ \Delta \underline{\theta} \\ \Delta \dot{\underline{X}} \\ \Delta \dot{\theta} \end{bmatrix} \triangleq A \begin{bmatrix} \Delta \underline{X} \\ \Delta \underline{\theta} \\ \Delta \dot{\underline{X}} \\ \Delta \dot{\underline{\theta}} \end{bmatrix}$$

The dot above $\Delta \underline{X}$ and $\Delta \underline{\theta}$ indicate a derivative with respect to time. The roots of the equation

$$\text{Eq 32} \qquad |sI - A| = 0$$

are the natural frequencies of the system. The amplitude ratios can found as for any undamped linear system.

Extensions - More Than One Lumped Mass

The case of the unloaded or lightly loaded arm is one in which the dynamics of the arm vibration are not dominated by one lumped mass. The criteria for modeling with lumped masses will not be discussed here, but rather the use of the technique developed will be extended to include any number of lumped masses. Figure 7 shows schematically a model that one may be interested in.

Initially one obtains spring constants between each mass point and its adjacent mass points. The nonequilibrium forces on each mass depend only on the difference in the vector positions between it and its neighbors. Thus for the example in Figure 7, with some change in notation:

Eq 33 $$J_i \ddot{\underline{X}}_i = K_{i,\ i-1} \ (\underline{X}_{i-1} - \underline{X}_i) + K_{i+1,\ i} \ (\underline{X}_{i+1} - \underline{X}_i)$$

where $\underline{X}_i = \begin{bmatrix} \Delta \underline{X} \\ \hline \Delta \underline{\theta} \end{bmatrix}_{i\,0}$ = position and angular orientation for mass i, measured from equilibrium in base coordinates

$K_{i,\ i-1}$ = spring constant matrix between mass i and mass i-1

$K_{i+1,\ i}$ = spring constant matrix between mass i and mass i+1

J_i = the inertia matrix for mass i

i = 1,2,...,M

This equation can be written for all M masses. The end masses are special cases

Eq 34 $$J_1 \ddot{\underline{X}}_1 = -K_{10} \ \underline{X}_1 + K_{21} \ (\underline{X}_2 - \underline{X}_1)$$

Eq 35 $$J_M \ddot{\underline{X}}_M = K_{M,\ M-1} \ (\underline{X}_{M-1} - \underline{X}_M)$$

If we assemble these into one matrix expression, its form is:

Eq 36

$$
\begin{bmatrix} \ddot{\underline{X}}_1 \\ \ddot{\underline{X}}_2 \\ \vdots \\ \ddot{\underline{X}}_i \\ \vdots \\ \ddot{\underline{X}}_M \end{bmatrix}
=
\left[\begin{array}{c|c|c|c|c|c|c}
J_1^{-1}(K_{21}+K_{10}) & J_1^{-1}K_{21} & & & & & \\
\hline
J_2^{-1}\,K_{21} & -J_2^{-1}(K_{31}+K_{21}) & J_2^{-1}\,K_{31} & \cdots & & & \\
\hline
 & \vdots & \vdots & & & & \\
\hline
 & & & J_i^{-1}K_{i,i-1} & -J_i^{-1}(K_{i+1,i}+K_{i,i-1}) & J_i^{-1}K_{i+1,i} & \cdots \\
\hline
 & & & & & & \\
\hline
\cdots & & & & \vdots & J_M^{-1}\,K_{M,\,M-1} & -J_M^{-1}\,K_{M,\,M-1}
\end{array}\right]
\begin{bmatrix} \underline{X}_1 \\ \underline{X}_2 \\ \vdots \\ \underline{X}_i \\ \vdots \\ \underline{X}_M \end{bmatrix}
$$

Simplifications - Some Moments of Inertia Insignificant

One or more of the moments of inertia of a lumped mass-inertia may be insignificant with respect to the mass and the other moments of inertia. In this case it is desirable to reduce the number of state variables by two by ignoring the associated angle and angular velocity. The moments will be continuous in the beam for the axes associated with the trivial moments of inertia. The other moments and the forces in the beam undergo a discontinuity in our lumped mass model due to the inertial loading. Let K designate the spring constant matrix of the entire arm, considering all points of loading. Its form

is similar to the large matrix in Eq 36, but the J^{-1} terms are removed. Then

Eq 37 $$\bar{C} = \bar{K}^{-1}$$

$$\begin{bmatrix} \bar{\underline{X}} \\ \hline \bar{\underline{\Theta}} \end{bmatrix} = \bar{C} \begin{bmatrix} \bar{\underline{F}} \\ \hline \bar{\underline{M}} \end{bmatrix}$$

where $\bar{\underline{F}}$ = unknown, possibly nonzero loading

$\bar{\underline{X}}$ = displacements or angles associated with the $\bar{\underline{F}}$ elements

$\bar{\underline{M}}$ = loading terms which will be identically zero

$\bar{\underline{\Theta}}$ = angles associated with the $\bar{\underline{M}}$ elements

Eq 39 $$\begin{bmatrix} \bar{\underline{X}} \\ \hline \bar{\underline{\Theta}} \end{bmatrix} = \bar{C} \begin{bmatrix} \bar{\underline{F}} \\ \hline \underline{0} \end{bmatrix} = \left[\begin{array}{c|c} \bar{C}_{11} & \bar{C}_{12} \\ \hline \bar{C}_{21} & \bar{C}_{22} \end{array}\right] \begin{bmatrix} \bar{\underline{F}} \\ \hline \underline{0} \end{bmatrix}$$

Eq 40 $$\bar{\underline{X}} = \bar{C}_{11} \bar{\underline{F}}$$

Eq 41 $$\bar{\underline{\Theta}} = \bar{C}_{21} \bar{\underline{F}}$$

Eq 42 $$\begin{bmatrix} \bar{\underline{F}} \\ \hline \underline{0} \end{bmatrix} = \bar{K} \begin{bmatrix} \bar{\underline{X}} \\ \hline \bar{\underline{\Theta}} \end{bmatrix} = \bar{K} \begin{bmatrix} \bar{\underline{X}} \\ \hline \bar{C}_{21} \bar{\underline{F}} \end{bmatrix}$$

Eq 43 $$= \left[\begin{array}{c|c} \bar{K}_{11} & \bar{K}_{12} \\ \hline \bar{K}_{21} & \bar{K}_{22} \end{array}\right] \begin{bmatrix} \bar{\underline{X}} \\ \hline \bar{C}_{21} \bar{\underline{F}} \end{bmatrix}$$

Eq 44 $$\underline{\overline{F}} = \overline{K}_{11}\,\underline{\overline{X}} + \overline{K}_{12}\;\overline{C}_{21}\;\underline{\overline{F}}$$

Eq 45 $$\underline{\overline{F}} = (I - \overline{K}_{12}\;\overline{C}_{21})^{-1}\;\overline{K}_{11}\;\underline{\overline{X}}$$

The above operations assume the inverse can be performed.

The reduced equations of motion are then:

Eq 46 $$M\,\frac{d^2}{dt^2}\,\underline{\overline{X}} = (I - \overline{K}_{12}\;\overline{C}_{21})^{-1}\;\overline{K}_{11}\;\underline{\overline{X}}$$

where M is the reduced inertia matrix obtained by eliminating the appropriate rows and columns from the unreduced inertia matrix.

Example Problem

In order to illustrate the theory presented above, a computer program was developed to evaluate the compliance matrix for an example arm. The compliance matrix was then input to an existing matrix manipulation program along with an inertia matrix to develop the equations of motion for a simple case.

As a realistic example the arm parameters and configuration were taken from a proposal by the Martin Marrietta Company for a boom for the space shuttle. These are shown in Table 1. Figure 8 shows the arm in the configuration of the example and the distribution of the 65,000 lb. load. These joint angles were chosen because they realistically duplicate a position in a retrieve maneuver for which the arm might be used. It also enables a separation of modes reducing the number of state variables to six. This is due to the planar motion of the mass. Figure 9 indicates the oscillations resulting from an initial displacement of ten inches in the Y direction at the endpoint.

The computer program required 0.08 hours of IBM 1130 computer time to evaluate the compliance matrix for six joint angle positions. This includes some compilation and program listing time, and the program could be considerably streamlined.

Rotational Compliance at a Point

As developed previously the transformation of coordinates due to deflection is given in Eq. 8. If only rotations at a point are of interest the form of the transformation for small angles is:

Eq 47

$$D = \begin{bmatrix} 1 & 0 & 0 & 0 \\ 0 & 1 & -\theta_Z & \theta_Y \\ 0 & \theta_Z & 1 & -\theta_X \\ 0 & -\theta_Y & \theta_X & 1 \end{bmatrix}$$

Here θ_X, θ_Y, and θ_Z are the angles of rotation due to loading about the X,Y, and Z axes in any coordinate system of interest.

These angles may be expressed in terms of the components of the moments acting on the point expressed in the same coordinate system as the angles, and a rotational joint compliance about each axis, here denoted α_{JX}, α_{JY}, and α_{JZ}

Eq 48

$$D = \begin{bmatrix} 1 & 0 & 0 & 0 \\ 0 & 1 & -\alpha_{JZ}M_Z & \alpha_{JY}M_Y \\ 0 & \alpha_{JZ}M_Z & 1 & -\alpha_{JX}M_X \\ 0 & -\alpha_{JY}M_Y & \alpha_{JX}M_X & 1 \end{bmatrix}$$

This matrix can represent a joint compliance. It can then be used to evaluate overall arm compliance in a manner similar to the matrix E of Eq 8. which represents the link compliance. Note that for joint compliance due to bearing supports, etc., on the end of two adjoining links

which change orientation with the joint angle, two point compliance matrices are necessary to properly account for a change in orientation as follows

Eq 49
$$\begin{bmatrix} 1 \\ \hline \underline{X}_{i,i-1} \end{bmatrix} = D_{i-} A_i D_{i+} E_i \begin{bmatrix} 1 \\ \hline \underline{X}_{i,i} \end{bmatrix}$$

where notation is the same as for Eq. 4 with the addition of D_{i-} and D_{i+}. D_{i-} is the point compliance matrix which accounts for deflection of bearings, supports and drive at joint i which remain stationary on the link i-1. D_{i+} accounts for compliances stationary on link i.

Flexibility and Mechanical Power Transmission

When power is transmitted to a joint from a prime mover which is located away from the joint, the deflection of the link between the motor and the joint will depend on the manner in which the power is transmitted. The torque which is taken from the joint is transferred to the prime mover in various ways and the manner in which this is done affects the state of stress in the intervening segment. For example, a band drive with no reduction completely removes the component of moment along the axis of the joint and increases the compressive normal stress. A bevel gear and shaft drive as shown in Fig. 10 with no reduction retains the moment M_Z along the joint axis but shifts the moment about the link axis by an amount M_Z divided by the distance of transmission. A flexible cable drive as shown in Fig. 11 removes joint axis moments while altering forces mutually perpendicular to the joint and link axes and moments along the link axis. The effects of a particular transmission system must be determined by equilibrium considerations and possibly deflection considerations. Once determined, the effects can be represented in a transformation matrix which enables one to conveniently determine the overall compliance. For example, consider the schematic in Fig. 13. The segment of the arm from the fixed mounting to the motor M would be described by a simple beam deflection transformation matrix E of the form of Eq 9. The segment between the motor and gearbox would be described by a drive deflection transformation E_d such as those displayed

in Fig. 10, 11 or 12, depending on the type of drive employed. The joint itself will have a rotational compliance which accounts for the bearing supports, joint shafts etc. In addition servo motor compliance (although nonlinear), twisting of drive shafts or stretching of drive cables, and deflections within the gearbox will manifest themselves in the joint compliance. These are rotational compliances which manifest themselves at a point, and should not be confused with the distributed deflection described by E_d. For Fig. 13 the complete transformation expression for end point loads would be:

Eq 50
$$\begin{bmatrix} 1 \\ \hline X_{20} \end{bmatrix} = E_1 E_d D_2 - A_2 D_2 + E_2 \begin{bmatrix} 1 \\ \hline 0 \end{bmatrix}$$

Design Analysis and Tradeoff Studies

Initially the simple but general case of an arm with two links and one joint is being studied. The criterion initially considered will be: maximize minimum resonant frequency and minimize the static deflection while penalizing the design weight. Fig. 13 shows the general case being studied. Even this simple case will have an unmanageable number of variables without certain assumptions. Among the assumptions being made are:

1) Hollow circular cross sections for all arm segments

2) Constant cross section over arm segment lengths

3) The same homogeneous material is used in all arm segments and power transmission members. Nonhomogeneous materials such as filament reinforced composites are excluded for the time being.

Additional assumptions will undoubtably be made as study indicates their reasonablemess.

Among the questions being addressed are:

1) What is the most desirable location of prime mover and speed reduction for varying sizes of prime movers?

2) What is the most desirable allocation of structural material between the arm and power transmission members?

3) How do these decisions depend on the penalties for natural frequency, deflection, and weight?

4) How do these decisions depend on the relative proportions of the arm?

5) How do these decisions depend on the mode of power transmission?

6) What is the limiting component of the design in terms of load capacity?

The analysis will be done in nondimensional variables to allow the broadest application and the presentation of results will be graphical whenever possible.

Analytical Expression for the Compliance Matrix

An analytical expression for the compliance matrix of a two link, one (compliant, revolute) joint arm has been derived. Fig. 14 displays the case and explains the variables. Eq. 51 gives the analytical results.

This was accomplished by using the coordinate transformation equation and its derivative with respect to force. The matrix manipulations were carried out manually with the terms being analytic expressions instead of numerical values which could be substituted in for a particular case. These results should avoid numerical evaluation of the compliance in many cases to be studied, and allow straightforward substitution of the arm parameters into an expression for the compliance.

Future Work

Preliminary work has developed the controllability matrix for the general case with joint angle position control. This has been used to show that the example problem above is controllable using two of the joints. Optimal control theory can now be used to determine suitable feedback gains if one has access to the state variables. The state variables can be partially measured and partially reconstructed using the measured variables. Measurements might be performed via accelerometers, optically, or in some other fashion. In all this future work the method developed here will make the determination of the equations of motion for arm vibration practical, even for complicated arm configurations.

Eqs. 51 Compliance Coefficients

$$C = \left[\begin{array}{c|c} C_{XF} & C_{XM} \\ \hline C_{\theta F} & C_{\theta M} \end{array}\right], \quad \left[\begin{array}{c} \underline{X} \\ \hline \underline{\theta} \end{array}\right] = C \left[\begin{array}{c} \underline{F} \\ \hline \underline{M} \end{array}\right]$$

α_J = joint compliance

α_{XF}, $\alpha_{\theta M}$, α_{XM}, $\alpha_{\theta F}$ as defined in Eq 1.

$\underline{X}$ = vector of deflections

$\underline{\theta}$ = vector of small rotations

ϕ defined in Fig. 14

$$C_{XF} = \begin{bmatrix} \left\{\begin{array}{l} \alpha_{C1}+(\alpha_{\theta M1}\ell_2^2+\alpha_J\ell_2^2+\alpha_{XF2})\sin^2\phi \\ \quad +\alpha_{C2}\cos^2\phi \end{array}\right\} & (\quad) & 0 \\ \left\{\begin{array}{l} (-(\alpha_{\theta M1}+\alpha_J)\ell_2^2+\alpha_{C2}-\alpha_{XF2})\sin\phi\cos\phi \\ -\alpha_{XM1}\ell_2\sin\phi \end{array}\right\} & \left\{\begin{array}{l} \alpha_{XF1}+(\alpha_{XM1}\ell_2+\alpha_{\theta F1}\ell_2)\cos\phi+\alpha_{C2}\sin^2\phi \\ \quad +(\alpha_{\theta M1}\ell_2^2+\alpha_J\ell_2^2+\alpha_{XF2})\cos^2\phi \end{array}\right\} & 0 \\ 0 & 0 & \left\{\begin{array}{l} \alpha_{XF1}+\alpha_{XF2}+(\alpha_{XM1}\ell_2+\alpha_{\theta F1}\ell_2)\cos\phi \\ \quad +\alpha_{\theta M1}\ell_2^2\cos^2\phi+\alpha_{T1}\ell_2^2\sin^2\phi \end{array}\right\} \end{bmatrix}$$

$$C_{XM} = \begin{bmatrix} 0 & 0 & (-\alpha_{\theta M}\ell_2-\alpha_J\ell_2-\alpha_{XM2})\sin\phi \\ 0 & 0 & \alpha_{XM1}+(\alpha_{\theta M1}\ell_2+\alpha_J\ell_2+\alpha_{XM2})\cos\phi \\ (\alpha_{T1}\ell_2+\alpha_{XM2})\sin\phi & -\alpha_{XM1}-(\alpha_{\theta M1}\ell_2+\alpha_{XM2})\cos\phi & 0 \end{bmatrix}$$

Eqs. 51 continued

$$C_{\theta M} = \begin{bmatrix} \alpha_{T1}+\alpha_{\theta M2}\sin^2\phi+\alpha_{T2}\cos^2\phi & (-\alpha_{\theta M2}+\alpha_{T2})\sin\phi\cos\phi & 0 \\ (-\alpha_{\theta M2}+\alpha_{T2})\sin\phi\cos\phi & \alpha_{\theta M1}+\alpha_{\theta M2}\cos^2\phi+\alpha_{T2}\sin^2\phi & 0 \\ 0 & 0 & \alpha_{\theta M1}+\alpha_J+\alpha_{\theta M2} \end{bmatrix}$$

$$C_{\theta F} = \begin{bmatrix} 0 & 0 & (\alpha_{T1}\ell_2+\alpha_{\theta F2})\sin\phi \\ 0 & 0 & -\alpha_{\theta F1}-(\alpha_{\theta M1}\ell_2+\alpha_{\theta F2})\cos\phi \\ (-(\alpha_{\theta M1}+\alpha_J)\ell_2-\alpha_{\theta F2})\sin\phi & \alpha_{\theta F1}+(\alpha_{\theta M1}+\alpha_J)\ell_2+\alpha_{\theta F2})\cos\phi & \end{bmatrix}$$

I	α_{Ci} AC(I)	α_{XFi} AXF(I)	α_{XMi} AXM(I)	$\alpha_{\theta Mi}$ ATM(I)	α_{Ti} AT(I)
1	7.7000E-07	2.9300E-04	3.0500E-06	4.2500E-08	5.3100E-08
2	0.0000E 00	0.0000E 00	0.0000E 00	0.0000E 00	0.0000E 00
3	1.4400E-06	4.7500E-03	2.5200E-05	1.7900E-07	1.2500E-07
4	0.0000E 00	0.0000E 00	0.0000E 00	0.0000E 00	0.0000E 00
5	3.6200E-06	1.1900E-02	6.3700E-05	4.5000E-07	5.6500E-07
6	0.0000E 00	0.0000E 00	0.0000E 00	0.0000E 00	0.0000E 00
7	0.0000E 00	0.0000E 00	0.0000E 00	0.0000E 00	0.0000E 00
8	9.2400E-07	1.9900E-04	8.3000E-06	4.6000E-07	5.7700E-07
	(in./lb_f)	(in./lb_f)	(in./in-lb_f)	(rad/in-lb_f)	(rad/in-lb_f)

$$\alpha_{\theta Fi}(\text{rad}/lb_f) = \alpha_{XMi}(\text{in.}/\text{in-}lb_f)$$

Table 1 Arm Parameters for Example Problem

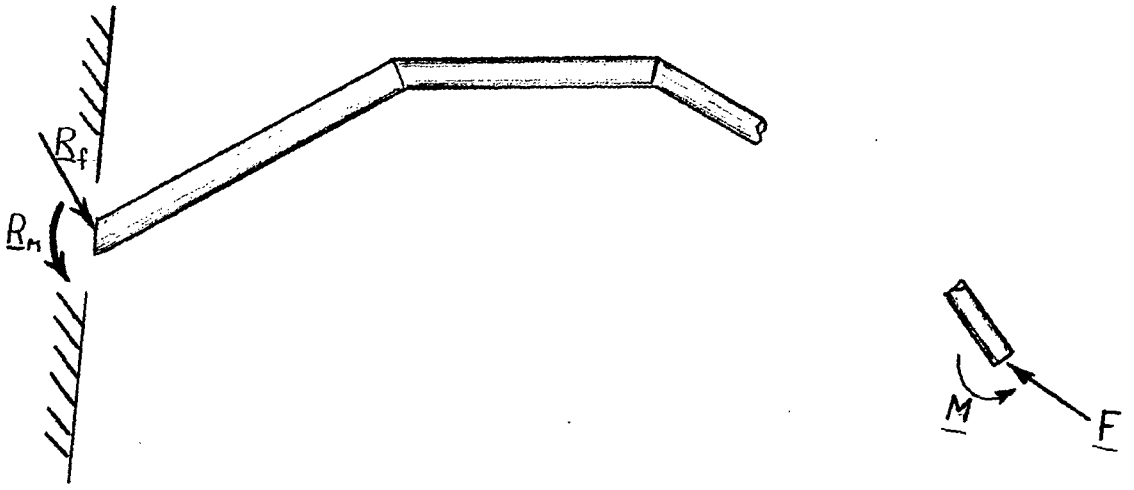

Fig 1. A multijointed arm in equilibrium under the applied loads $\underline{F}$ and $\underline{M}$ and the reactions $\underline{R}_F$ and $\underline{R}_M$.

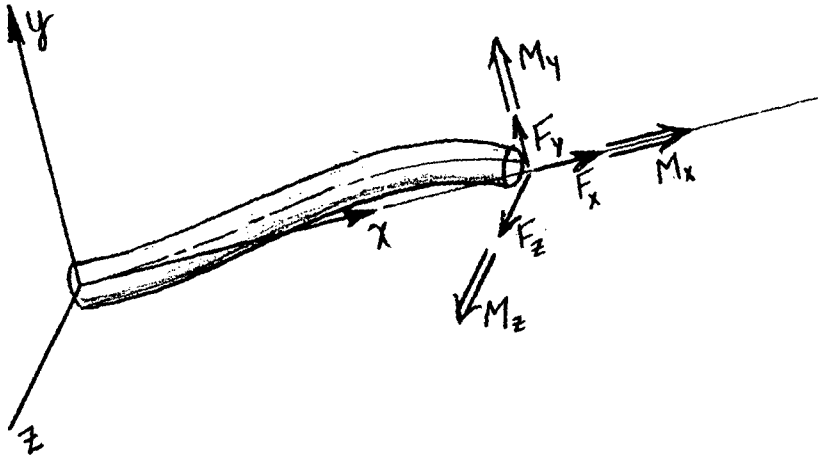

Fig 2. A coordinate system oriented with respect to an arm segment.

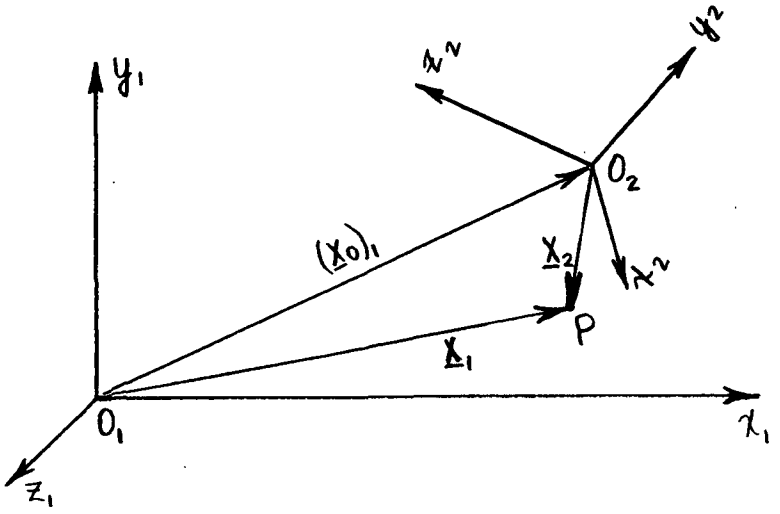

Fig 3. A transformation between coordinates.

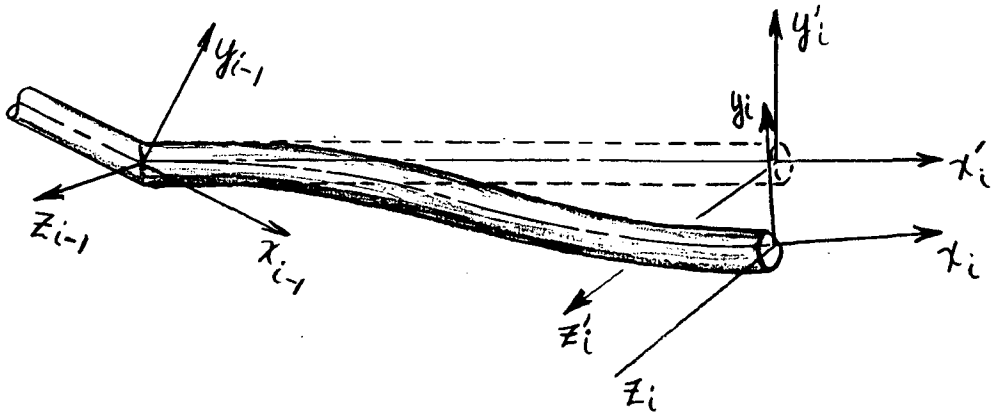

Fig 4. Transformations between deformed and undeformed beam.

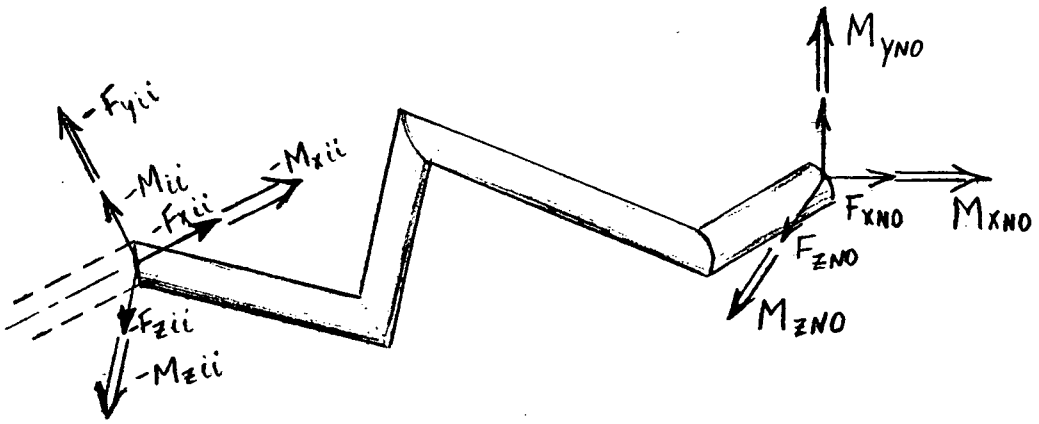

Fig 5. A free body diagram of a portion of an arm in equilibrium.

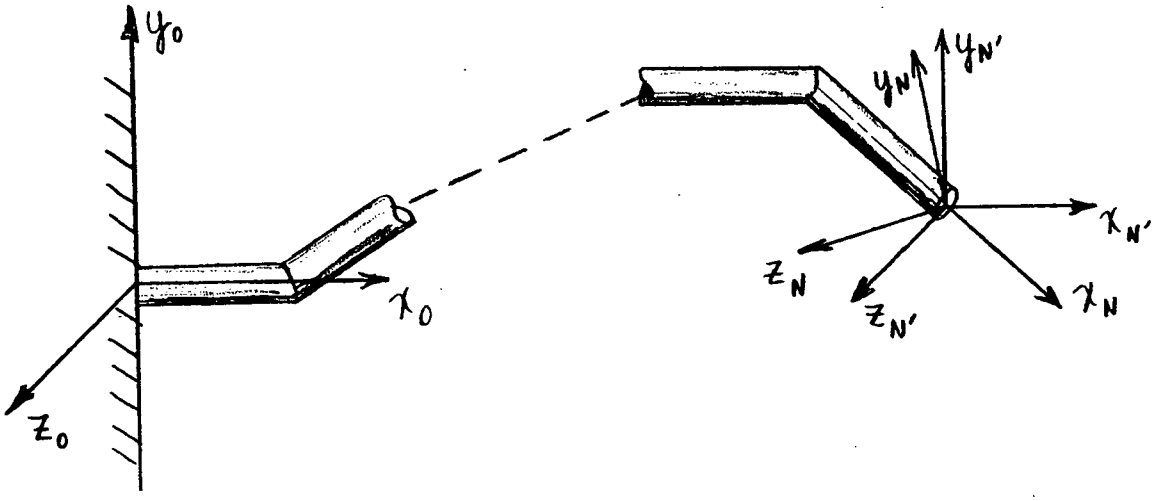

Fig 6. End point rotation in two coordinate systems.

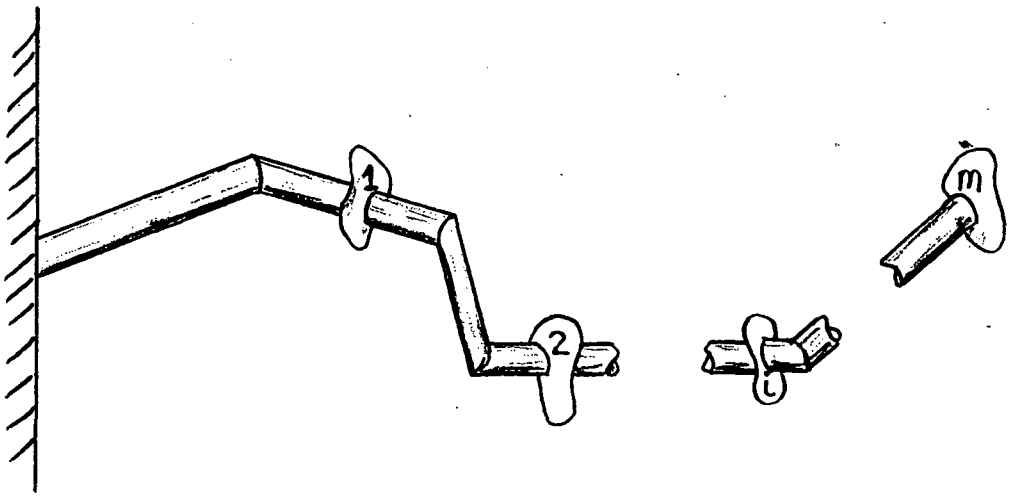

Fig 7. An arm modeled with multiple lumped masses.

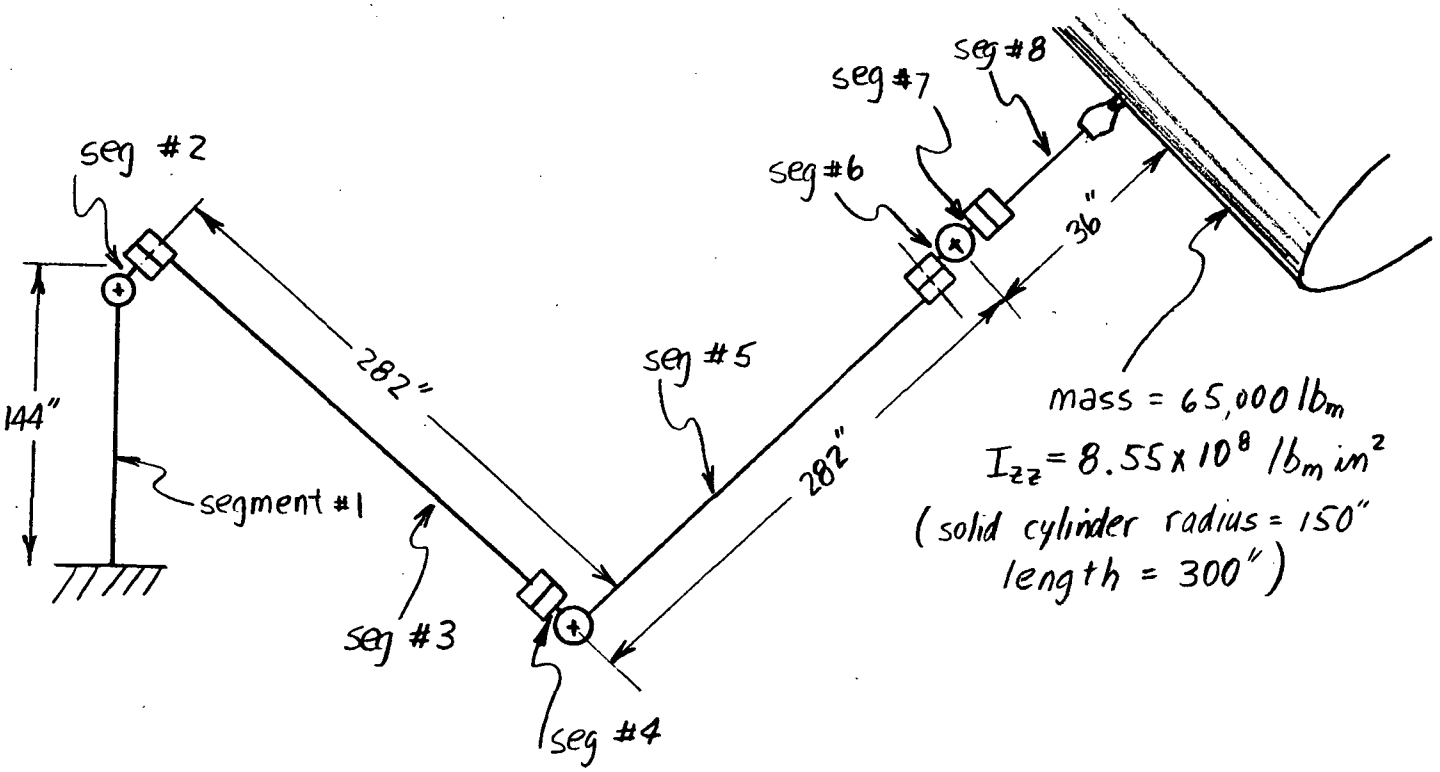

Fig 8. Example arm configuration.

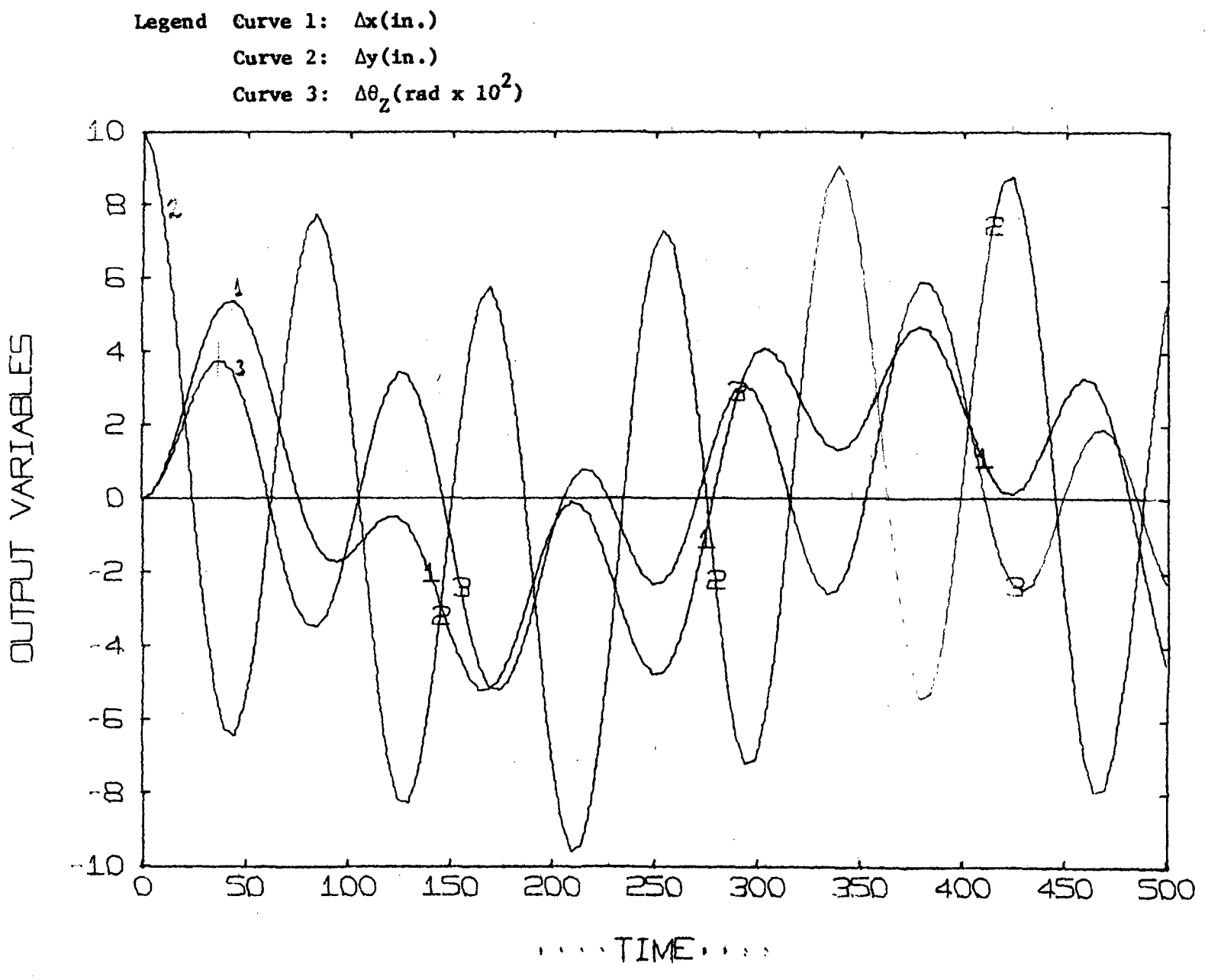

Figure 9. Time Response of example.

Fig. 10 Shaft Drive

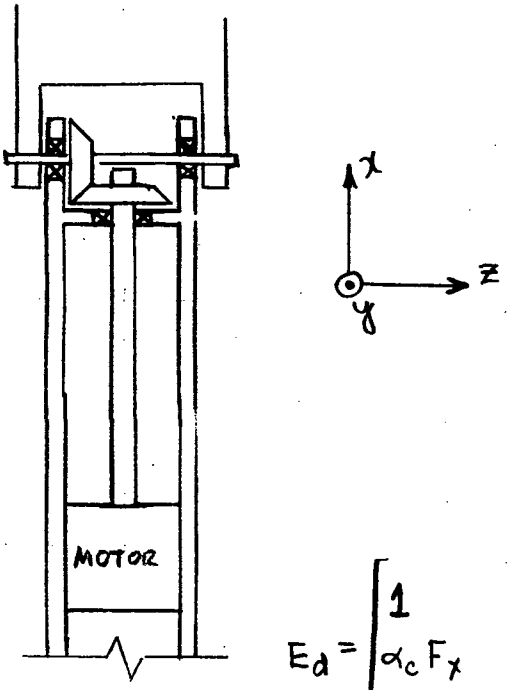

$$E_d = \begin{bmatrix} 1 & 0 & 0 & 0 \\ \alpha_c F_x & 1 & -(\quad) & -(\quad) \\ \alpha_{xF} F_y + \alpha_{xM} M_z & (\alpha_{\theta F} F_y + \alpha_{\theta M} M_z) & 1 & -(\quad) \\ \alpha_{xF} F_z - \alpha_{xM} M_y & (\alpha_{\theta F} F_z - \alpha_{\theta M} M_y) & \alpha_T (M_x + M_z) & 1 \end{bmatrix}$$

Fig. 11. Flexible Cable Drive

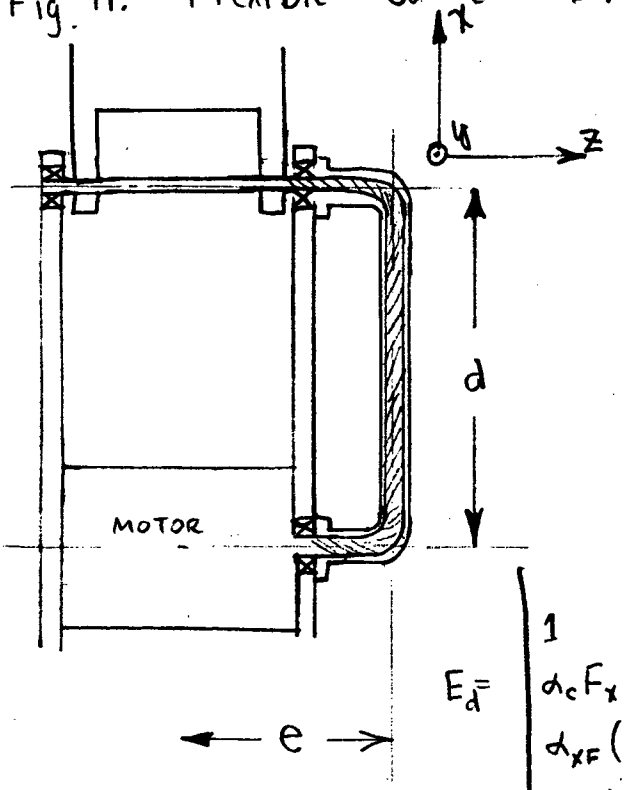

$$E_d = \begin{bmatrix} 1 & 0 & 0 & 0 \\ \alpha_c F_x & 1 & -(\quad) & -(\quad) \\ \alpha_{xF} (F_y - M/d) & \alpha_{\theta F} (F_y - M/d) & 1 & -(\quad) \\ \alpha_{xF} F_z - \alpha_{xM} M_y & (\alpha_{\theta F} F_z - \alpha_{xM} M_y) & \alpha_T \left(M_x - \frac{Me}{d}\right) & 1 \end{bmatrix}$$

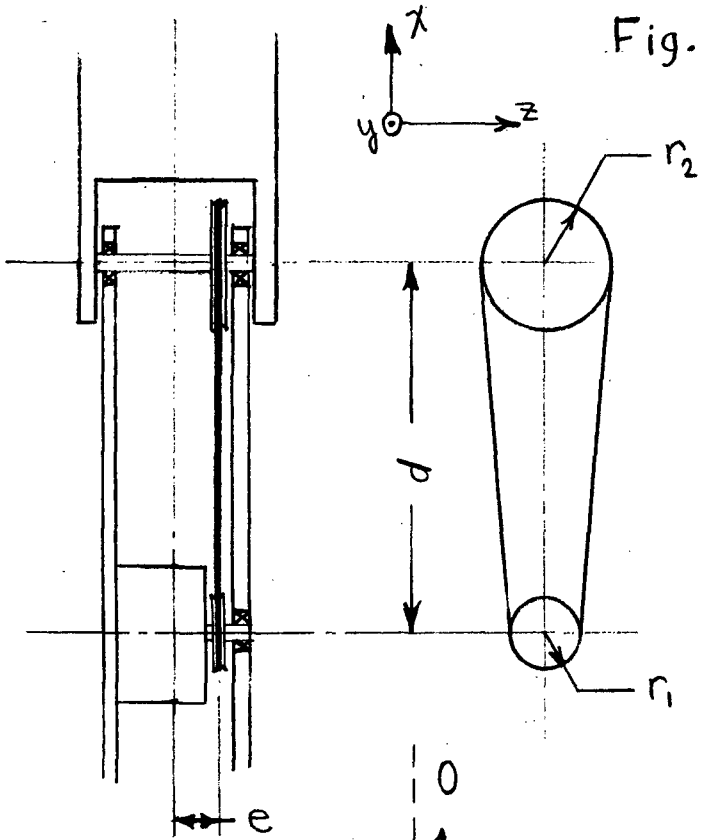

Fig. 12 Band and Pulley Drive

$$E_d = \begin{bmatrix} 1 & 0 & 0 \\ \alpha_c\left(F_x - \dfrac{\sqrt{d^2-(r_2-r_1)^2}\,|M_z|}{d\,r_2}\right) & 1 & -\left(\quad\right) \\ \alpha_{xF}\left(F_y + \dfrac{M_z(r_2-r_1)}{r_2 d}\right) & \alpha_{\theta F}\left(F_y + \dfrac{M_z(r_2-r_1)}{r_2 d}\right) & 1 \\ \alpha_{xF}\left(F_z - \dfrac{(r_2-r_1)M_z}{r_2 d}\right) - \alpha_{xM}\left(M_y - \dfrac{e\sqrt{d^2-(r_2-r_1)^2}\,|M_z|}{r_2 d}\right) & \alpha_{\theta F}\left(F_z - \dfrac{M_z(r_2-r_1)}{r_2 d}\right) - \alpha_{\theta M}\left(M_y - \dfrac{e\sqrt{d^2-(r_2-r_1)^2}\,|M_z|}{r_2 d}\right) & \alpha_T\left(M_x - \dfrac{e\,M_z}{r_2 d}(r_2-r_1)\right) \quad 1 \end{bmatrix}$$

Fig 13. Schematic of Case in Tradeoff Study

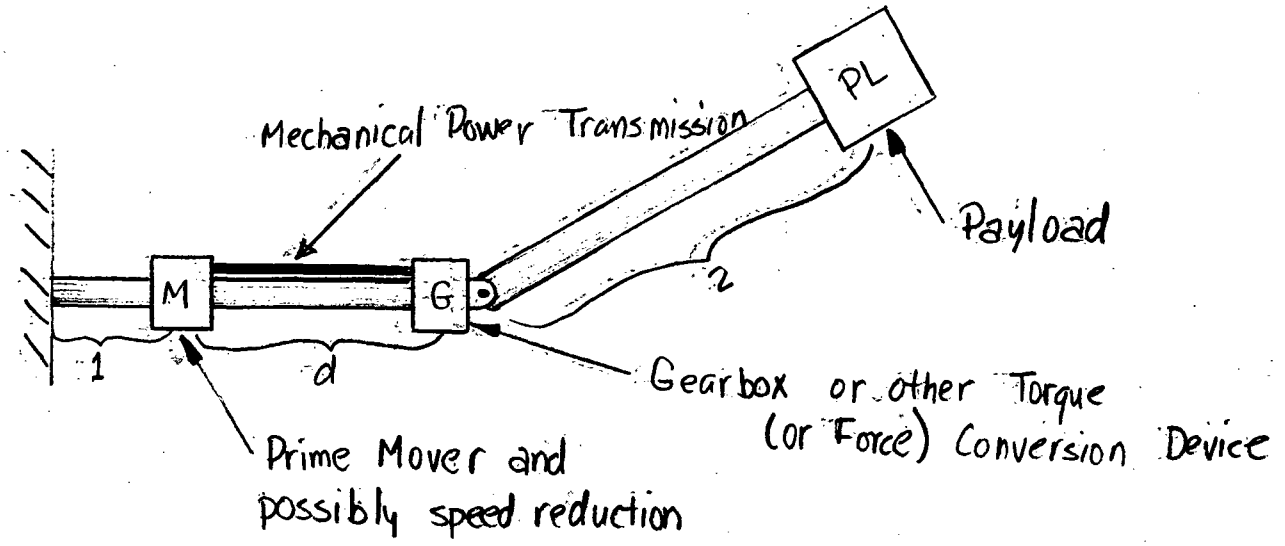
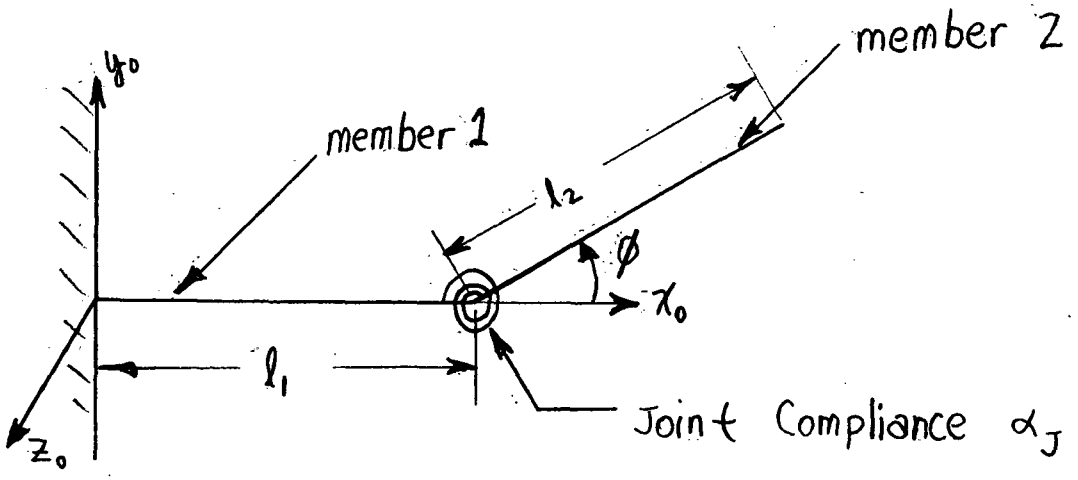
Fig 14 A Two Segment Arm, One Compliant Joint