N73-20139

# STUDY OF DESIGN AND CONTROL OF REMOTE MANIPULATORS PART IV

## EXPERIMENTS IN VIDEO CAMERA POSITIONING WITH REGARD TO REMOTE MANIPULATION

Jay Mackro

CASE FILE COPY

DSR 73784-2

February 15, 1973

Engineering Projects Laboratory
Department of Mechanical Engineering
Massachusetts Institute of Technology

NASA Contract NAS8-28055
Marshall Space Flight Center
Wilbur G. Thorton, Contract Monitor

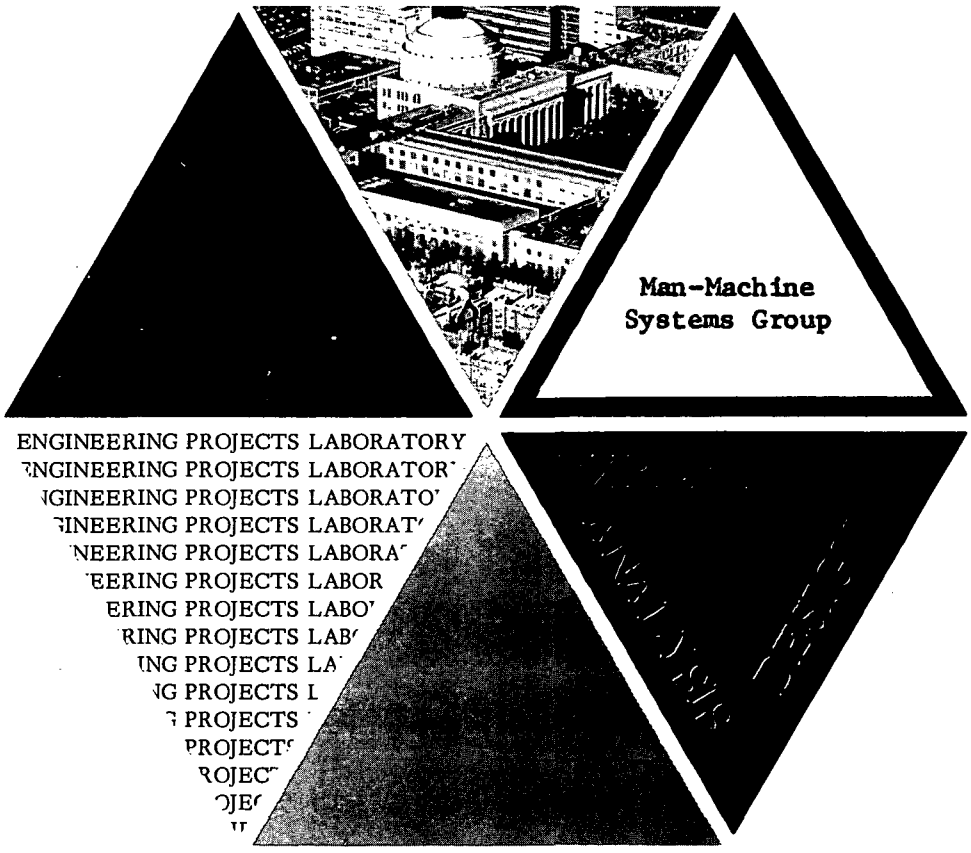

Final Report on NASA Contract NAS8-28055

Study of Design and Control of Remote Manipulators

Part IV

# Experiments in Video Camera Positioning with Regard to Remote Manipulation

by

Jay Mackro

Prepared by Department of Mechanical Engineering
Massachusetts Institute of Technology
Cambridge, Massachusetts 02139

For George C. Marshall Space Flight Center, NASA
Marshall Space Flight Center, Alabama 35812

February 15, 1973

# TASK 3-a: EXPERIMENTS IN VIDEO CAMERA POSITIONING WITH REGARD TO REMOTE MANIPULATION

by Jay Mackro

## INTRODUCTION

Remote manipulation is a tool that is used to perform tasks in environments which are too dangerous or too distant for a human to work in. When distance is involved, direct visual contact between the operator and the task becomes impossible. Closed circuit television is the obvious solution to provide the task-to-operator feedback needed for efficient performance. This report concerns the problem of choosing the remote video configuration that will result in the best overall system.

The tests which were run fell into two categories - those which involved remote control position (rate) of just the video system ("visual manipulation"), and those in which closed circuit T.V. was used along with manipulation of the objects themselves.

## EXPERIMENT I: VISUAL MANIPULATION

### General

Defining mechanical manipulation as the process of locating and/or working with a physical object, visual manipulation then becomes that process which involves the location and/or utilization of images. Many of the characteristics of conventional manipulation are unchanged when an image replaces a physical object in a manipulation task. The jaws of a mechanical system are replaced by a television camera; the object that

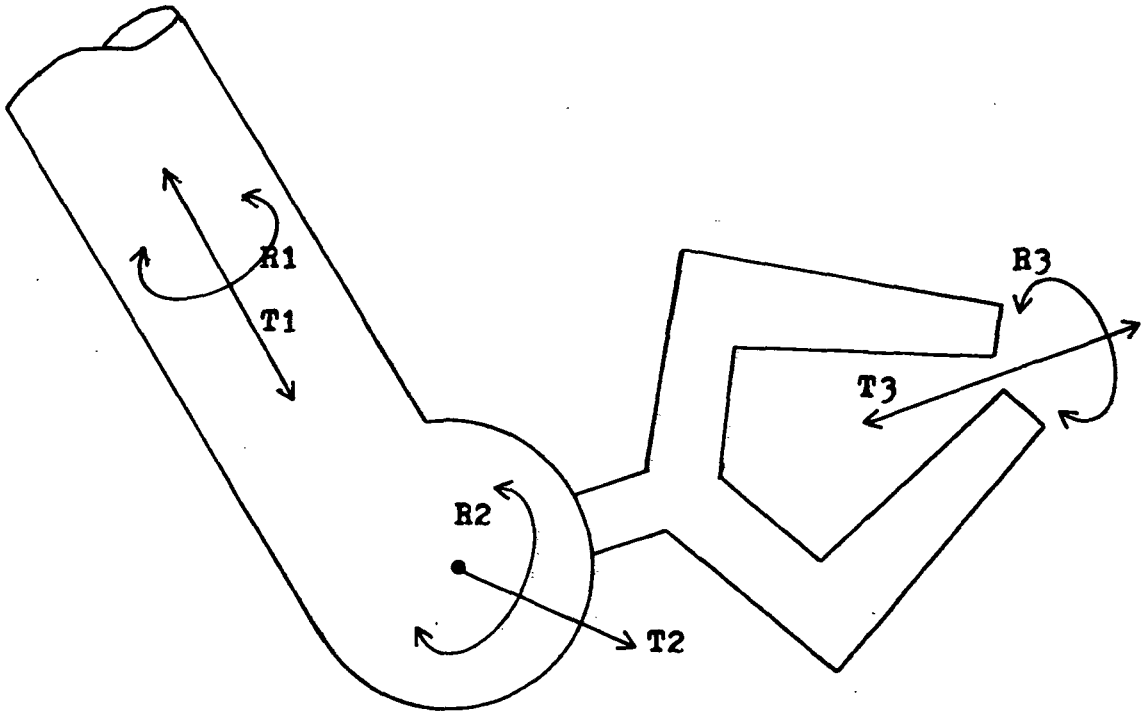


Translational and Rotational Degrees of Freedom
of a Remote Hand

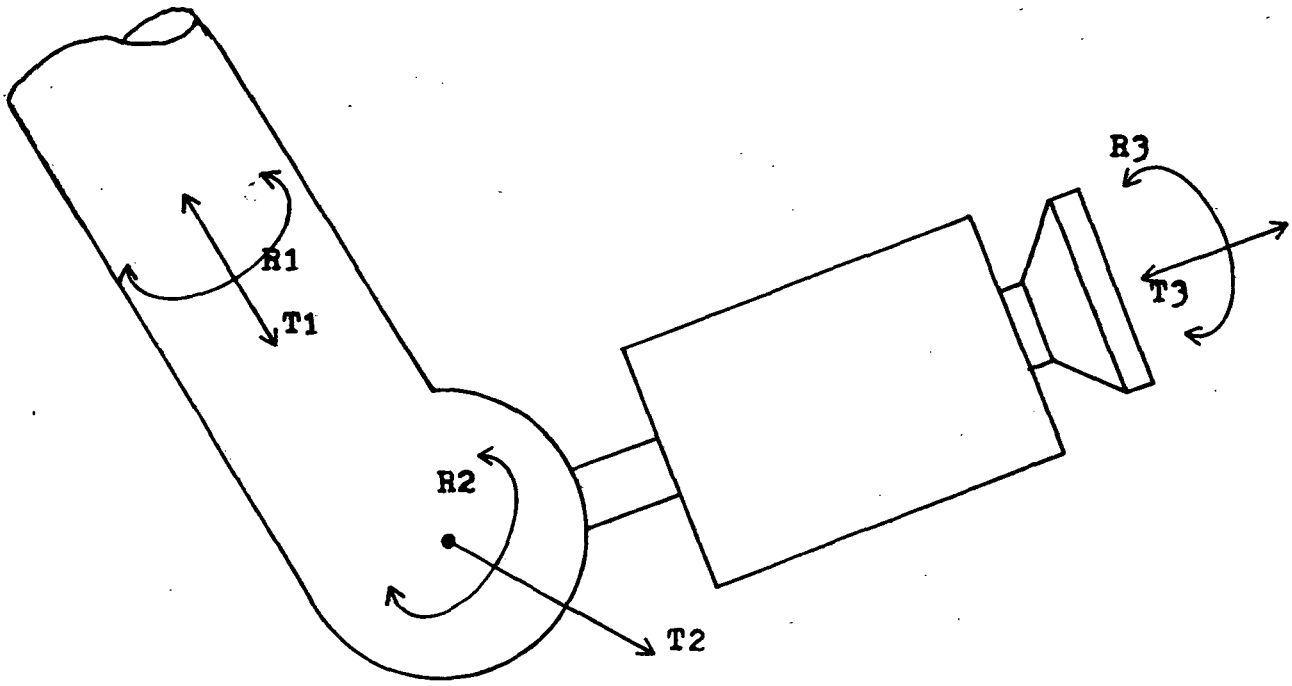


Translational and Rotational Degrees of Freedom
of a Remote Camera. Rotation #R3 is Redundant.

FIGURE 1 MANIPULATOR DEGREES OF FREEDOM

was grasped or prodded is replaced by an area which will be viewed from different angles or distances.

One area in which visual and mechanical manipulation differ is in their number of effective degrees of freedom. It is accepted that a remote hand can be displaced in six distinct dimensions - three translations and three rotations. A television camera, being a solid body like the remote hand, can also be displaced in six dimensions. However, one of these dimensions, namely sight axis rotation, will provide no additional information (see Figure 1). The visual display of a closed circuit T.V. system is planar: it is contained on the face of the monitor screen. The result of a sight axis rotation of the camera will be to rotate the monitor image about a perpendicular of its center. No additional information will be added by such a motion, and thus, it can be considered to be a redundant degree of freedom.

Task

Three methods of camera control were tested in this study: 1) Position control, in which the camera replaces the jaws of a conventional master-slave manipulator.* The monitor remains stationary in this mode. 2) "Moving Window", in which the fixed monitor of method no. 1 is replaced by a monitor fixed to the manipulator's position control input. Thus, the operator moves his picture directly to adjust the image. 3) Rate controlled pan and tilt, in which the camera's translational

*A mechanically coupled, six degree of freedom, AMF manipulator was used in this study.

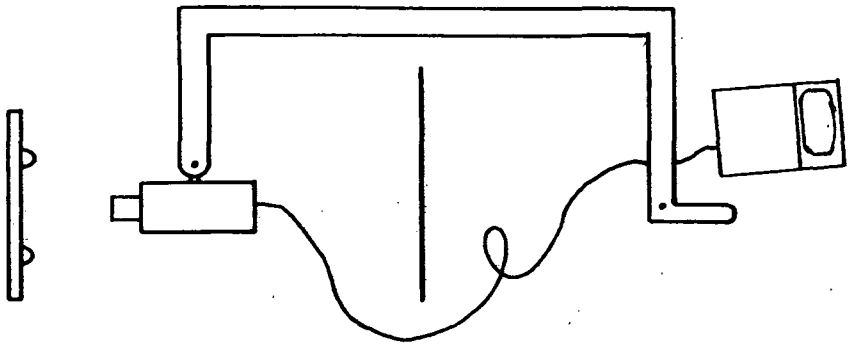

POSITION CONTROL

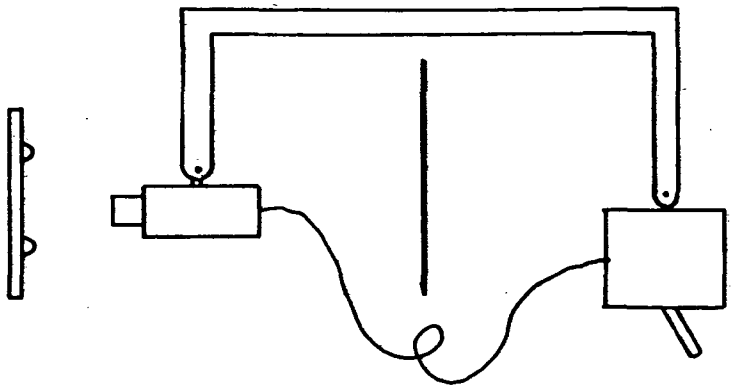

MOVING WINDOW

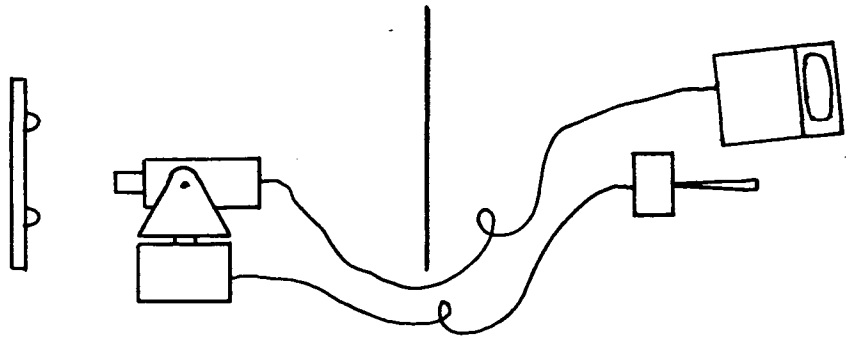

RATE CONTROLLED PAN AND TILT

FIGURE #2 Methods of camera manipulation

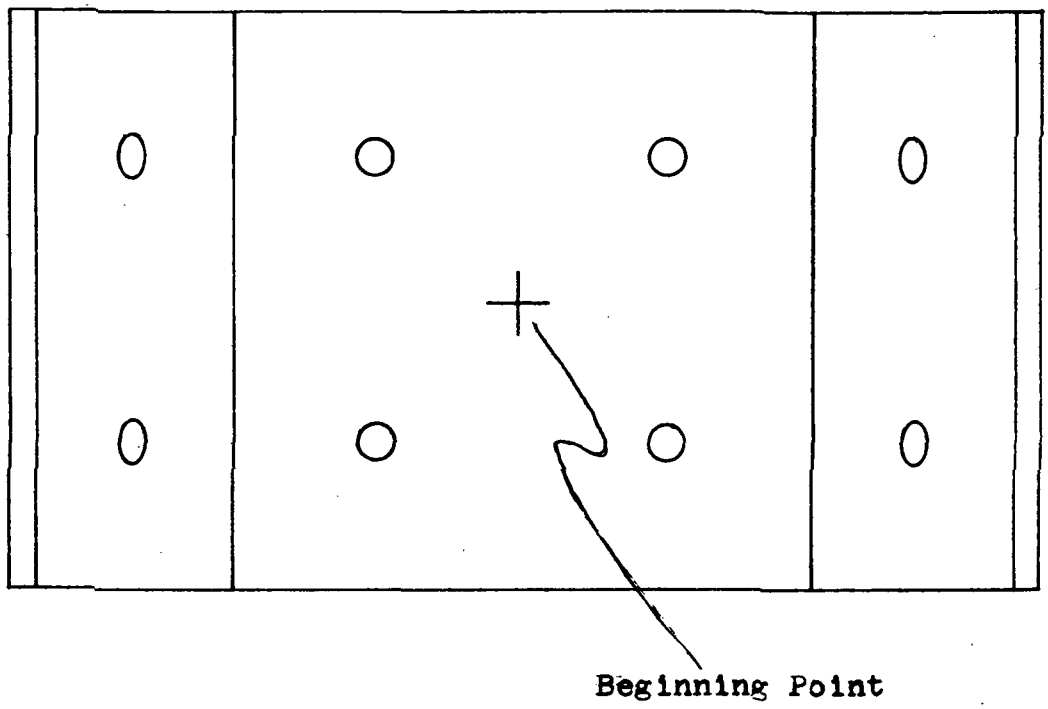


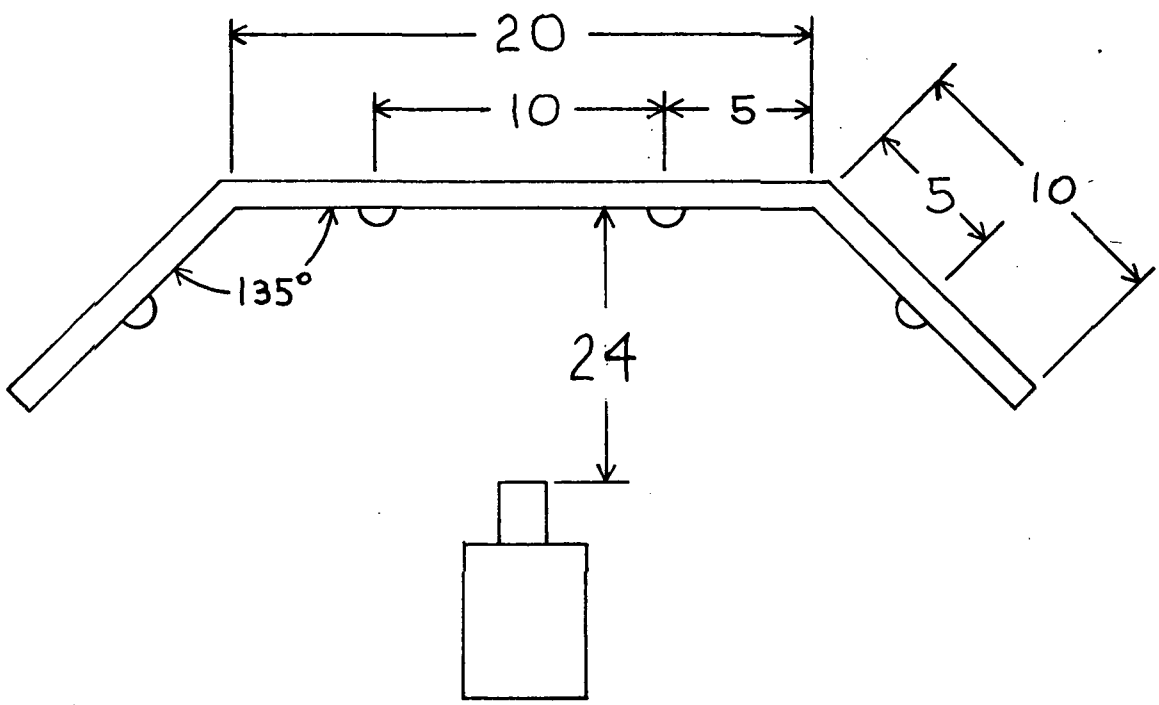


FIGURE #3 Layout and dimensions of experimental task.

degrees of freedom are fixed, and the operator uses a joystick to rotate the camera vertically and laterally. In this configuration, as in Fig. 1, the monitor remains stationary. (see Figure 2).

The task for this study involved locating a random point on a plane facing the camera, and positioning it within a target on the monitor acreen. A board containing a grid of eight lights was placed in front of the camera's center position. The mean camera-to-board distance and the focal length of the lens used were such that only one light could be included within the visual field at a time. (see Figure 3)

## Experimental Procedure

The operator was instructed to begin by aligning a two inch diameter ring on the monitor screen with a cross at the center of the light board. At the start signal, one of the eight lamps was lit, a timing clock was started, and the operator began scanning the board to locate the lit light. When the light was located, and positioned within the target ring on the monitor, the clock was stopped, recording the task completion time.

## Discussion of Results

The subject independently adopted a "spiral search" strategy, in which the lamps closest to the starting point were scanned first, before going on to the outer ones. The completion times then became a measure of how fast the camera could be moved around this spiral path. The times fell into two groups: near and far, corresponding to locating a light in the inner part of the spiral (near) and to locating one in

its outer part (far). The average completion time, as well as the averages for near and far light, are listed in Table 1.

Efficiency in location tasks such as this light search is highly dependent on the system's ability to move quickly, and to stop on command. Position control, and moving window yielded about the same times in this study, both being dependent on the speed and stopping ability of the operator's hand.

The moving window was slightly more efficient than the simple position controlled camera. The moving window system has a potential advantage over the other means of camera manipulation, which explains its greater performance. As was discussed previously, rotation of the viewing camera about its axis of sight provides no additional information to the operator. In actual practice, this redundant degree of freedom can serve to confuse the operator. For example, in a configuration in which the monitor is fixed (such as the position control tested here) a camera rotation of $90^{\circ}$ about the sight axis will change the monitor image orientation so that the direction that was "up" is now "right", while that which was "down" becomes "left". Such a transformation can be quite confusing to the operator, particularly if the image itself contains no reference directions.

Such rotations are cancelled out in the moving window system. Here, any motions that the camera undergoes are followed by the monitor; as a result, when the camera is rotated about its sight axis, the monitor moves to compensate, and the displayed image itself does not move. The operator of a fixed monitor is forced to either hold his camera

TABLE 1

AVERAGE COMPLETION TIMES REQUIRED TO LOCATE RANDOM LIGHT (SECONDS)

| | All Lights | Near | Far |
|---|---|---|---|
| Position Control | 3.44 | 2.16 | 4.72 |
| Moving Window | 3.12 | 1.88 | 4.36 |
| Rate Pan & Tilt | 17.5 | 12.14 | 22.97 |

from rotating, or to try to keep track of how his image has rotated with respect to his own orientation. If he fails in this, he can reverse the sign of the system's feedback, moving the camera in directions which he does not wish it to go.

The rate controlled pan and tilt means of camera control was clearly the least efficient of the methods tested. The limiting factor on this device was the speed at which it can move the camera. The pan and tilt apparatus used in this study had a single rate available, the control stick serving to turn it on or off (this is in contrast to a proportional rate control in which the rate is continuously adjusted by the amount of control stick deflection). The camera was rotated at a speed of approximately 0.5 rpm, which yielded a linear speed of 1.2 in/sec along the light board. Higher speeds would not necessarily lower the task completion times, however, because of the difficulty to stop a fast moving camera when the image is sighted.

## Conclusions

Thus, these tests indicate that efficiency in image manipulation, as in object manipulation, is highly dependent on the "convenience" with which the camera can be moved. Remote object grasping can be controlled by the operator's hands - the same organs which he uses to grasp objects under ordinary conditions. Unfortunately, the optical muscles, those organs which we normally use for visual manipulation, cannot easily be coupled to a remote manipulator. Such devices as the moving window, which provide a clear relationship between the control input and the resulting image motion, help to simplify the adaptation necessary to move the visual field manually.

## EXPERIMENT II: THE EFFECT OF VISUAL FEEDBACK ON REMOTE MANIPULATOR PERFORMANCE

### General

These tests involved a standard object manipulation task, performed in each case with the same master slave manipulator (the six degree of freedom A.M.F. device mentioned in Section I). The factor which varied between these tests was the means of visual feedback which allowed the operator to view his work. Several camera orientations were tested, and the results were compared to those yielded by direct viewing.

### Task

The task which was performed consisted of sequentially placing a 3/4 in. diameter by 4 in. long rod into three holes, each 1 in. in diameter by 2 in. deep. Two variations of hole direction were used: one in which all the centerlines were parallel (Task A, see Figure 4-A) and the second in which all centerlines met at angles of $120^{\circ}$ to each other (Task B, see Figure 4-B). Both tasks were run with the plane of the blocks parallel to, and inclined $30^{\circ}$ to, the floor (see Figure 5).

Four methods of viewing the task were employed: 1) Direct viewing, 2) closed circuit T.V. with the camera placed along the sight axis of method no. 1, 3) closed circuit with the camera mounted above the task, looking down at it, and 4) closed circuit with the camera mounted on the manipulator arm, again looking down on the task. (see Figure 6)

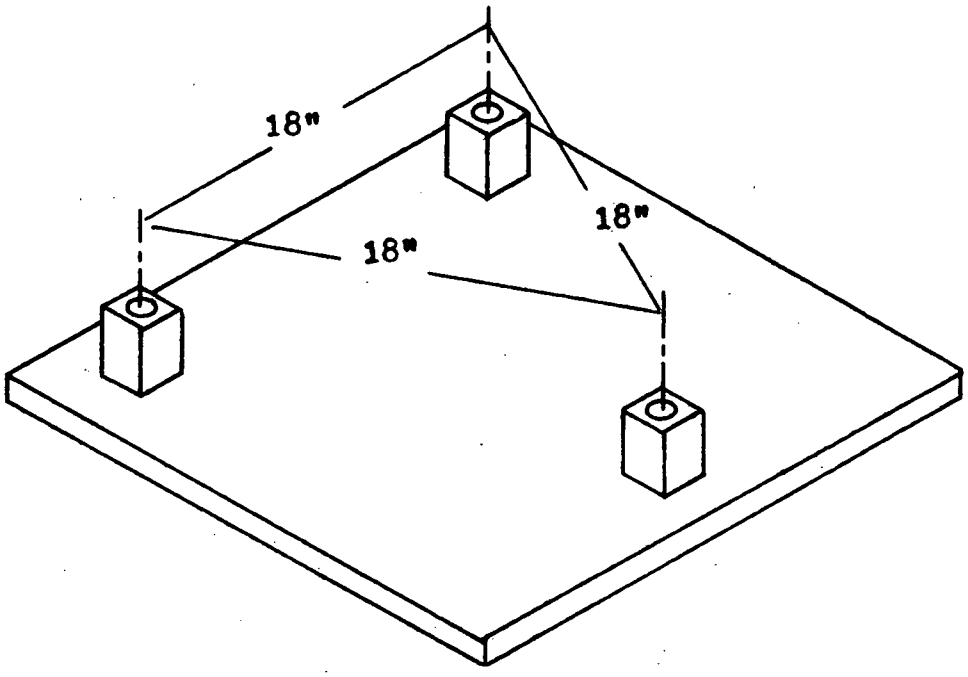


FIGURE 4-A TASK A

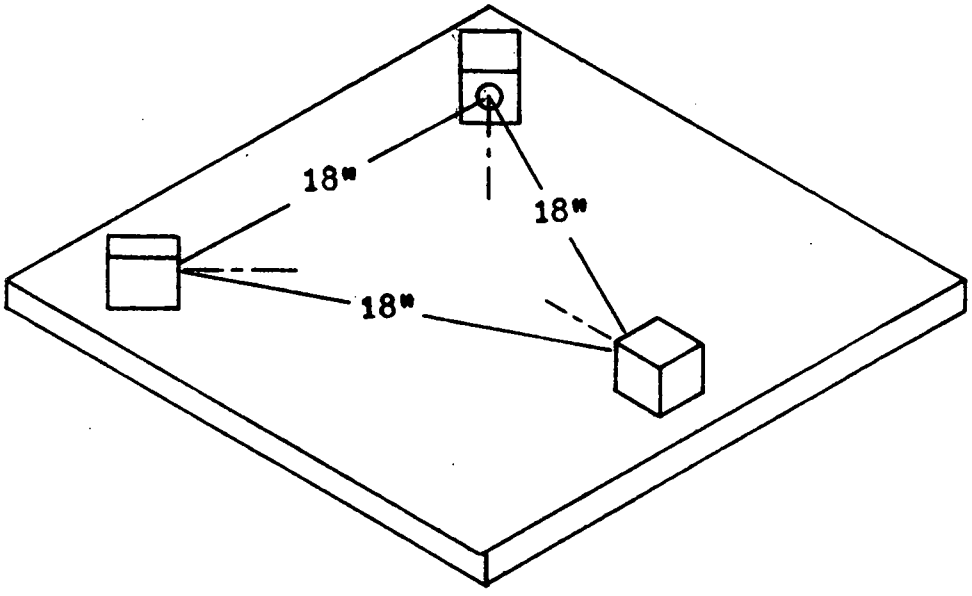


FIGURE 4-B TASK B

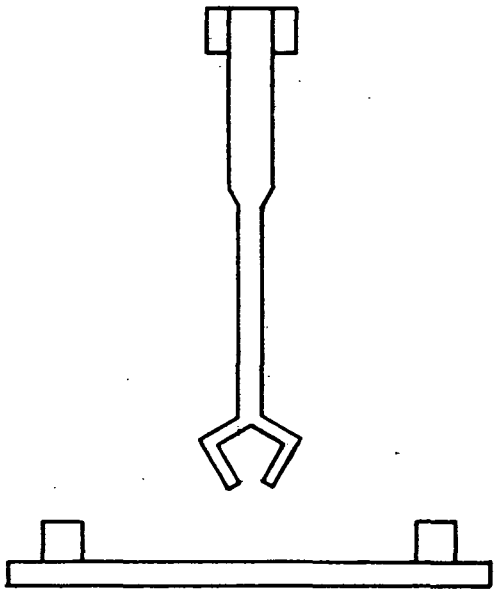

TASK PARALLEL TO FLOOR

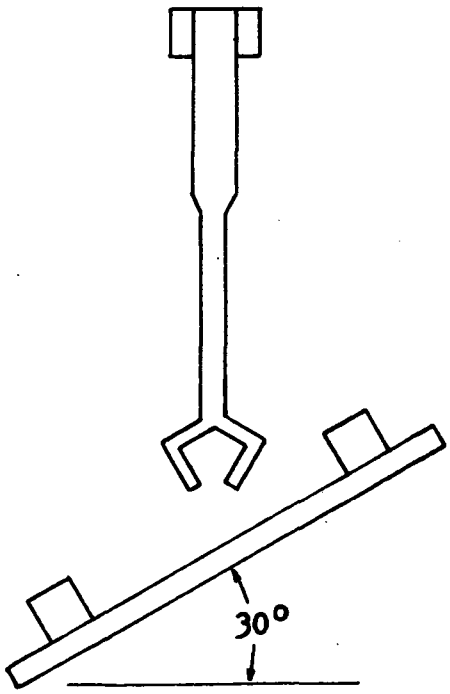


TASK AT 30° INCLINATION

FIGURE 5

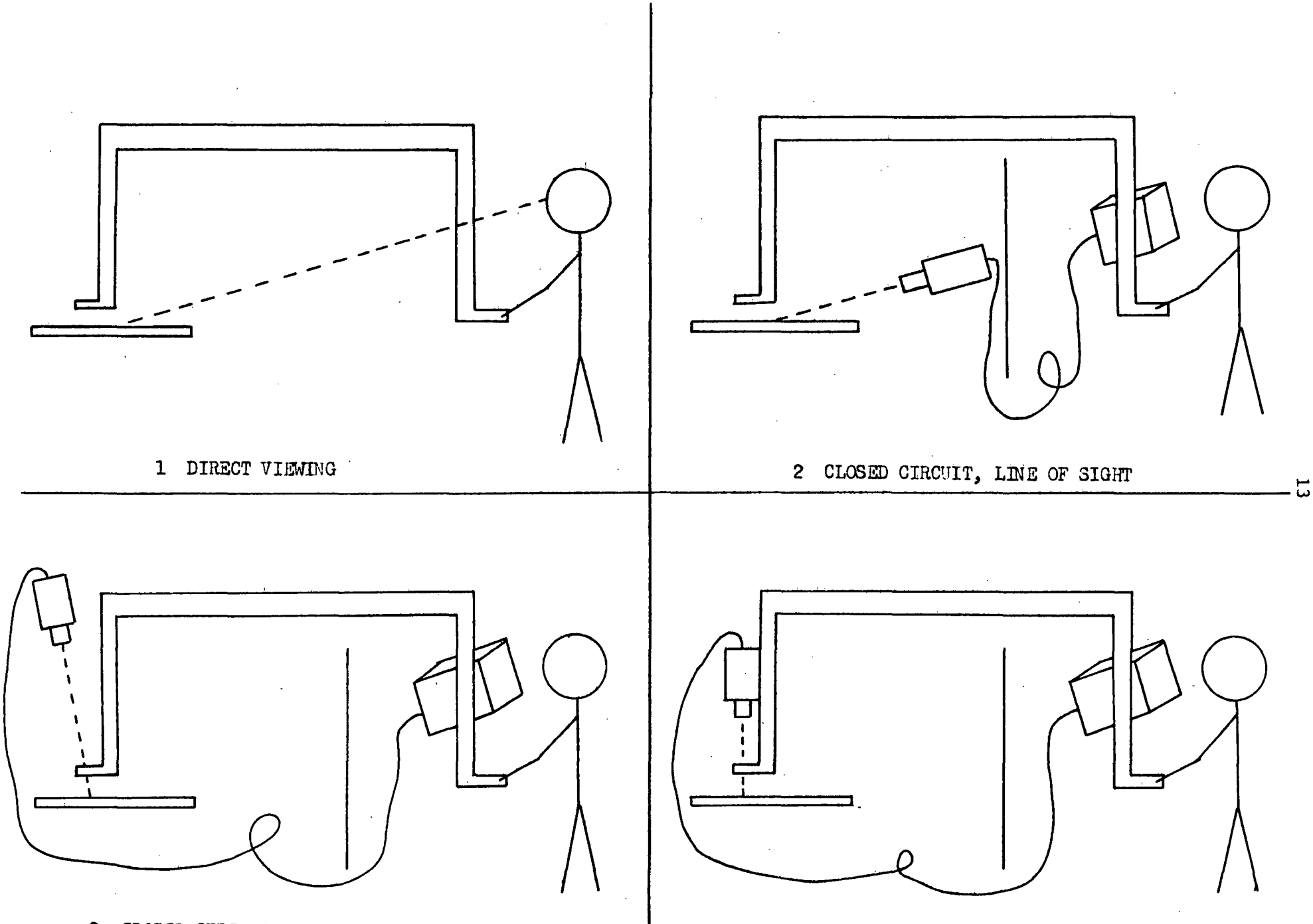


FIGURE 6 VIEWING CONFIGURATIONS

## Experimental Procedure

The procedure for running a test with all combinations of task and manipulator was as follows: The peg was initially placed in the right most hole (with respect to the operator) and all clocks were initialized. The subject was then to move the peg counterclockwise around the "triangle" of holes, finishing when it was back in the first hole. The times were recorded for each interval, and the procedure repeated. Ten runs were made for each combination of task, and video system.

The average of each of the three intervals was taken for each combination over all ten runs, as well as over the last five runs. This procedure was followed because it was observed that the reduction in task completion time due to learning took place largely in the first five runs. These averages are listed in Table 2.

By averaging the three intervals for each situation, a single indication of system efficiency can be produced. These averages are shown in Table 3-A. Taking the ratio of fixed camera and moving camera average times to direct viewing times for each task, a relative comparison can be made between the methods of visual feedback. These results are shown in Table 3-B.

## Discussion of Results

In all cases the force feedback inherent to the AMF mechanically coupled manipulator served to augment the operator's knowledge. Although in task B, the third hole is not clearly visible with the direct or fixed camera systems, the force feedback allows the operator to find the hole quite easily, once the gross alignment has been performed visually.

The repeatability of the motions involved in each of the tasks,

TABLE 2

AVERAGE TASK COMPLETION TIME (SECONDS)

(Averages taken over the final five trials to eliminate the effects of learning.)

(1) Direct Viewing

| | A-B | B-C | C-A |
|---|---|---|---|
| Task A Flat | 2.34 | 1.95 | 2.62 |
| " " 30° | 2.66 | 2.31 | 2.77 |
| Task B Flat | 2.93 | 2.56 | 3.04 |
| " " 30° | 3.38 | 3.09 | 3.25 |

(2) Fixed Camera Line of Sight

| | A-B | B-C | C-A |
|---|---|---|---|
| Task A Flat | 6.10 | 5.04 | 4.97 |
| " " 30° | 6.17 | 4.24 | 4.44 |
| Task B Flat | 6.10 | 4.98 | 4.39 |
| " " 30° | 5.87 | 5.69 | 5.39 |

(3) Fixed Camera Vertical

| | A-B | B-C | C-A |
|---|---|---|---|
| Task A Flat | 4.54 | 2.95 | 3.40 |
| " " 30° | 3.23 | 2.89 | 4.38 |
| Task B Flat | 5.70 | 5.19 | 6.18 |
| " " 30° | 7.19 | 8.46 | 6.97 |

(4) Camera on Manipulator

| | A-B | B-C | C-A |
|---|---|---|---|
| Task A Flat | 2.96 | 2.70 | 2.74 |
| " " 30° | 3.46 | 2.42 | 3.84 |
| Task B Flat | 3.82 | 3.61 | 3.36 |
| " " 30° | 6.20 | 8.40 | 6.16 |

TABLE 3-A

AVERAGE TIMES FOR EACH TASK, WITH INDIVIDUAL MOVES AVERAGED TOGETHER.

| | (1) Direct Viewing | (2) Fixed Line of Sight | (3) Fixed Vertical | (4) Camera on Manipulator |
|---|---|---|---|---|
| Task A, Flat | 2.30 | 5.35 | 3.63 | 2.80 |
| " ", 30° | 2.58 | 6.88 | 3.50 | 3.24 |
| Task B, Flat | 2.84 | 5.15 | 5.44 | 3.59 |
| " " 30° | 3.24 | 5.65 | 7.54 | 6.90 |

TABLE 3-B

RATIO OF AVERAGE CLOSED CIRCUIT TIMES/DIRECT VIEWING TIMES.

| | (2) Fixed Line of Sight | (3) Fixed Vertical | (4) Camera on Manipulator |
|---|---|---|---|
| Task A, Flat | 2.32 | 1.58 | 1.22 |
| " " 30° | 2.66 | 1.35 | 1.26 |
| Task B, Flat | 1.81 | 1.91 | 1.26 |
| " " 30° | 1.74 | 2.32 | 2.12 |

as well as the one to one nature of the manipulator, allowed the operator to adapt to a new task quite quickly. After the initial few runs, his memory of where and how far to move the master arm served to facilitate the gross positioning of the peg. This factor would not be present in an unrehearsed task.

When performing either task with the plane of the blocks inclined 30°, the time interval required to go from hole #2 to hole #3 was frequently lower than the other two intervals generated. This was because these two holes were at the same vertical level, and as a result, required one fewer degree of freedom to be oriented. This phenomenon was especially noticeable for task A, inclined, with the camera mounted on the manipulator arm. With this camera position, vertical distance cannot be seen directly; hence the maneuver which required the least vertical alignment was easiest to perform. The B-C time was not the lowest for task B, inclined, because the camera orientation did not allow viewing behind the manipulator arm; i.e., where block #C was located.

Noticably better performance was found for the camera on manipulator viewing system (#4) than for the fixed vertical orientation (#3). Since these two configurations give a similar image to the operator (i.e., a "bird's eye view" of the task) the difference in performance is of interest. The greater efficiency of the camera on manipulator system (#4) can be attributed to the fact that it provided the operator with a more magnified view of the task than did the fixed vertical system (#3). With the moving camera, the televised area could be quite small since the camera was automatically aimed at the area of interest; that is, the operator was given a "close up" view of his work. With

the fixed camera, the entire task board had to be visible at all times. As a result, the camera had to be mounted farther away, giving the operator a less detailed view.

In one case, task B inclined 30°, the "line of sight" camera orientation gave better performance than did either of the vertical viewing orientations. The reason for this was that the holes in blocks B and C were not visible to a vertical camera when the board was tipped up. This is apparent in the data in Table 2: for task B, 30°, with both methods of vertical viewing, the A-B, and B-C moves took more time than did the C-A move. This occurred because the hole in block A was the only one visible.

With the camera mounted to the manipulator arm, the line of sight rotation discussed previously became possible. The image orientations which would result from such a rotation are shown in Figure 7. The subject avoided this condition by holding the manipulator arm with his other hand, thus not allowing this direction of rotation. However, by doing this, he lost one degree of freedom on the mechanical manipulator, since this device can use all six possible degrees effectively. A better system would result if the camera were counter-rotated when the manipulator was turned, to cancel the line of sight rotation without limiting the jaws' degrees of freedom. An alternative solution would be to rotate the monitor along with the camera (as discussed in Section I) so that the image would hold its orientation.

## Conclusions

This study has shown that system performance is seriously impaired when direct visual contact between the operator and the task

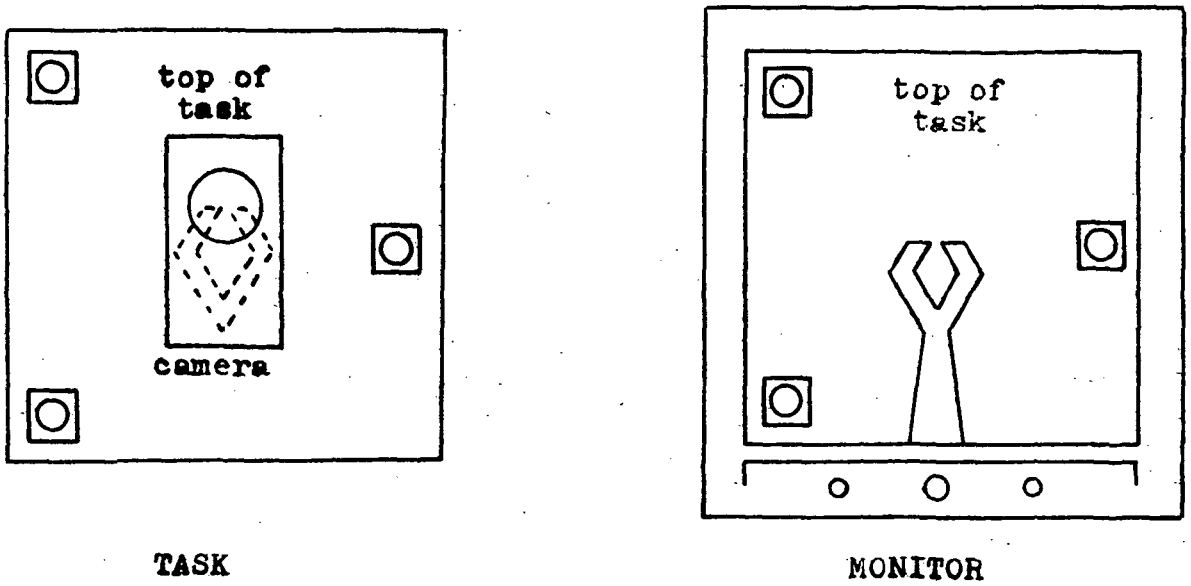


Camera orientation which provided the most useful image

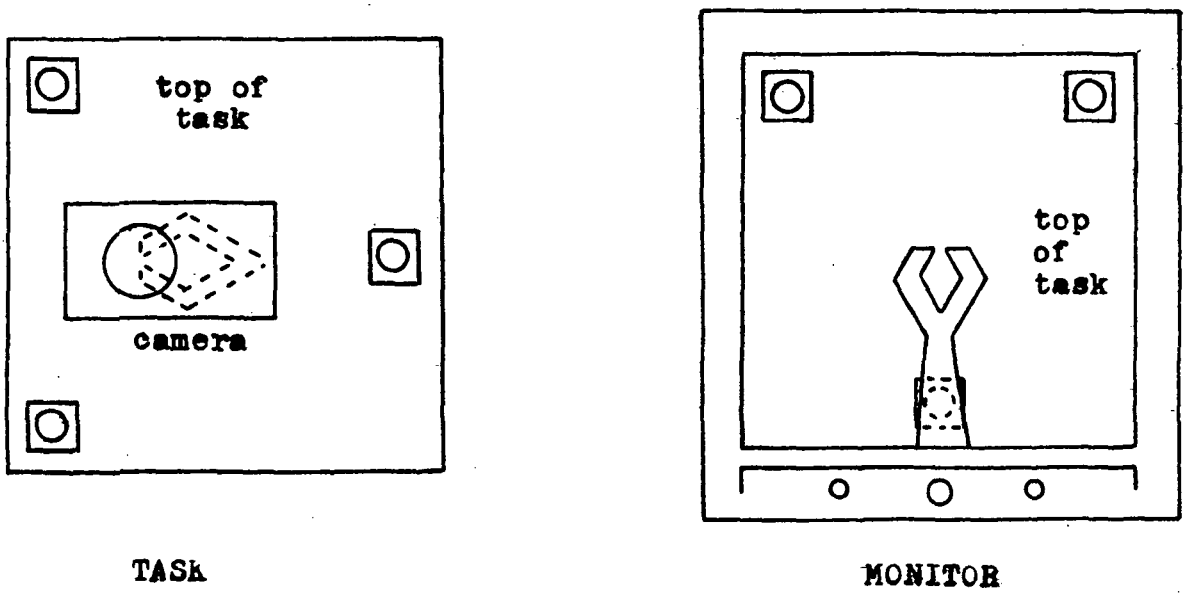


Camera orientation which provided a confusing image

FIGURE 7 Clarifying and Confusing Image Orientations

is replaced by closed circuit television. Some of this lost efficiency can be regained if the television camera is oriented in such a way as to view the more critical dimensions of the task. However, this optimum viewing angle is highly dependent on the task; no single camera position serves well for general work.

If two closed circuit video systems are available, a fixed camera viewing the work from a shallow angle (called "line of sight" in this study) augmented by a moving camera attached to the manipulator, and focused on the hand, should give the best combination. The manipulator camera alone serves well for small scale tasks, however, it cannot guide the operator when he has to reach for a distant object. Also the arm mounted camera cannot see when the hand has to reach under an object. A fixed camera will give the operator an overall view of his work, as well as provide a reference for the position of the hand.