NASA TECHNICAL NOTE

N73-23943

NASA TN D-7293

NASA TN D-7293

CASE FILE COPY

EFFECT OF PRIMARY-ZONE WATER INJECTION ON POLLUTANTS FROM A COMBUSTOR BURNING LIQUID ASTM A-1 AND VAPORIZED PROPANE FUELS

by Robert D. Ingebo and Carl T. Norgren

Lewis Research Center

Cleveland, Ohio 44135

NATIONAL AERONAUTICS AND SPACE ADMINISTRATION • WASHINGTON, D. C. • MAY 1973

1. Report No.	2. Government Accession No.	3. Recipient's Catalog No.
NASA TN D-7293		

4. Title and Subtitle	5. Report Date
EFFECT OF PRIMARY-ZONE WATER INJECTION ON POLLUTANTS FROM A COMBUSTOR BURNING LIQUID ASTM A-1 AND VAPORIZED PROPANE FUELS	May 1973
	6. Performing Organization Code
7. Author(s)	8. Performing Organization Report No.
Robert D. Ingebo and Carl T. Norgren	E-7355
	10. Work Unit No.
9. Performing Organization Name and Address	501-24
Lewis Research Center National Aeronautics and Space Administration Cleveland, Ohio 44135	11. Contract or Grant No.
	13. Type of Report and Period Covered
12. Sponsoring Agency Name and Address	Technical Note
National Aeronautics and Space Administration Washington, D.C. 20546	14. Sponsoring Agency Code

15. Supplementary Notes

16. Abstract

A combustor segment 0.457 meter (18 in.) long with a maximum cross section of 0.153 by 0.305 meter (6 by 12 in.) was operated at inlet-air temperatures of 590 and 700 K (1060° and 1260° R), inlet-air pressures of 4 and 10 atmospheres, and fuel-air ratios of 0.014 and 0.018 to determine the effect of primary-zone water injection on pollutants from burning either propane or ASTM A-1 fuel. At a simulated takeoff condition of 10 atmospheres and 700 K (1260° R), multiple-orifice nozzles used to inject water at 1 percent of the airflow rate reduced nitrogen oxides 75 percent with propane and 65 percent with ASTM A-1 fuel. Although carbon monoxide and unburned hydrocarbons increased with water injection, they remained relatively low; and smoke numbers were well below the visibility limit.

17. Key Words (Suggested by Author(s))	18. Distribution Statement
Air-pollution control; Combustor emissions; Nitrogen-oxides reduction; Primary-zone water injection; Fuel combustion; Turbojet combustor	Unclassified - unlimited

19. Security Classif. (of this report)	20. Security Classif. (of this page)	21. No. of Pages	22. Price*
Unclassified	Unclassified	18	$3.00

* For sale by the National Technical Information Service, Springfield, Virginia 22151

EFFECT OF PRIMARY-ZONE WATER INJECTION ON POLLUTANTS FROM A COMBUSTOR BURNING LIQUID ASTM A-1 AND VAPORIZED PROPANE FUELS

by Robert D. Ingebo and Carl T. Norgren

Lewis Research Center

SUMMARY

To determine the effect of primary-zone water injection on pollutant emissions, a combustor segment was operated with vaporized propane and ASTM A-1 fuels for comparison. The rectangular combustor segment was 0.457 meter (18 in.) in length including the diffuser, with a maximum combustor cross section of 0.153 by 0.305 meter (6 by 12 in.). A snout area of 40 percent of the combustor open area was used to admit air into the combustor primary zone.

Test conditions included fuel-air ratios of 0.014 and 0.018, inlet-air temperatures of 590 and 700 K (1060° and 1260° R), and inlet-air pressures of 4 and 10 atmospheres. Without water injection, combustion efficiency varied from 96 percent to near 100 percent with either vaporized propane or liquid ASTM A-1 fuel. The effect of primary-zone water injection on combustion efficiency was relatively small as determined from gas analysis data.

With primary-zone water injection at a rate of 1 percent of the airflow rate, a greater effect on pollutant emissions was obtained with vaporized propane than with liquid ASTM A-1 fuel. In both cases, nitrogen oxides markedly decreased, whereas carbon monoxide and unburned hydrocarbons increased. The NO_x emission index, g NO_2/kg fuel, decreased from 16.6 to 4.4 (or 75 percent) with vaporized propane and from 18.0 to 6.0 (or 65 percent) with liquid ASTM A-1 fuel, at an inlet-air temperature of 700 K (1260° R) and a pressure of 10 atmospheres. Although appreciable changes in carbon monoxide, unburned hydrocarbons, and smoke number occurred, initial values without water injection were quite low. Thus, the values obtained with primary-zone water injection remained relatively low.

Primary-zone water injection proved more effective in decreasing NO_x emission when inlet-air temperature was increased from 590 to 700 K (1060° to 1260° R): 8 and 13 percent more effective with vapor and liquid fuels, respectively. However, the effect of primary-zone water injection on NO_x emission with liquid ASTM A-1 fuel did not appreciably change when inlet-air pressure was increased from 4 to 10 atmospheres.

INTRODUCTION

The effect of primary-zone water injection on pollutant emissions from a combustor segment was investigated by injecting water through a multiple-orifice fuel nozzle directly into the primary zone. Water injection tests were made by burning vaporized propane and liquid ASTM A-1 fuels.

The present trend in developing advanced turbojet engines is to increase compressor pressure ratio, which correspondingly increases the combustor inlet-air temperature and pressure (ref. 1). Increasing the combustor inlet-air temperature causes the primary-zone flame temperature to rise, which increases the rate of formation of nitrogen oxides (NO_x). Also, there is an additional increase in the formation of nitrogen oxides with increasing combustor pressure, particularly when the equivalence ratio is near unity in the primary zone (ref. 2). Thus, there is an urgent need to develop methods of markedly reducing the formation of nitrogen oxides at their point of origin in the primary zone of the combustor.

Various techniques have been used to reduce the formation of nitrogen oxides in the primary zone. In reference 3, specially designed air-atomizing fuel nozzles were tested and, combustor pollutant emissions were compared with those obtained when conventional pressure-atomizing fuel nozzles were used. A splash-cone air-atomizing fuel nozzle gave approximately 30 percent less nitric oxide than the pressure-atomizing nozzle, at a combustor pressure of 20 atmospheres and an inlet-air temperature of 590 K (1060° R). Also, preliminary studies with air-atomizing fuel nozzles in swirl-can combustor modules have shown considerable promise in reducing the formation of nitrogen oxides at 4 atmospheres pressure and high inlet-air temperature (ref. 4).

Methods have been recently proposed to reduce the flame temperature and thereby decrease nitrogen oxides by either adding steam to the compressor discharge air or injecting water directly into the combustor primary zone. In reference 5, it was found that a primary-zone water injection rate of 2 percent of the airflow reduced nitrogen oxides by approximately 75 percent, whereas the same rate of steam addition to the compressor discharge air reduced nitrogen oxides by approximately 50 percent. Thus, primary-zone water injection was found to be considerably more effective in reducing nitrogen oxides than upstream steam addition, which causes a considerable portion of the water vapor to enter the secondary zone. A similar result was obtained in reference 6. Also, it was found that both primary-zone water injection and upstream steam addition tended to increase the rate of formation of carbon monoxide (CO) and unburned hydrocarbons.

To evaluate the effect of primary-zone water injection on pollutant emissions, a combustor segment 0.457 meter (18 in.) long with a maximum cross section of 0.153 by 0.305 meter (6 by 12 in.) was operated at inlet-air conditions of 590 and 700 K (1060°

and 1260° R), inlet-air pressures of 4 and 10 atmospheres, fuel-air ratios of 0.014 and 0.018, and a reference velocity of 21.3 meter per second (70 ft/sec). The following pollutants were determined with and without water injection: exhaust smoke number and emission indices for nitrogen oxides, carbon monoxide, and unburned hydrocarbons. Both ASTM A-1 and propane fuels were used. However, the results were not directly comparable since different techniques of water injection were used with the two fuels. Also, combustion efficiency data were obtained without water injection, and combustion inefficiency was calculated with and without water injection from gas analysis data.

APPARATUS AND PROCEDURE

The test facility is schematically shown in figure 1 and is described in detail in reference 7. Combustion air containing 0.03 percent water vapor by weight was drawn from the laboratory high-pressure supply system and indirectly heated to 700 K (1260° R) in a counterflow U-tube heat exchanger. The combustor inlet-air temperature was automatically controlled by mixing the heated air with varying amounts of bypassed air. Airflow rates and inlet-air pressure were regulated with the remote-control valves.

Test Section

The counterflow high-pressure test section shown in figure 1 was designed to prevent an accumulation of fuel in the housing as a safety precaution in the event of a fuel leak. Combustion air flowing through the outer annular passage and reversing direction through the inner annular passage was deflected by the dome into the bellmouth, which provided uniform airflow distribution at the diffuser inlet.

Test Combustor

The rectangular combustor segment shown in figure 2 simulated an annular combustor design with an overall length of 0.457 meter (18 in.), consisting of a diffuser length of 0.140 meter (5.5 in.) and a burner length of 0.317 meter (12.5 in.). The combustor cross section was 0.053 by 0.305 meter (2.1 by 12 in.) at the diffuser inlet, 0.153 by 0.305 meter (6 by 12 in.) at the midsection, and 0.051 by 0.305 meter (2 by 12 in.) at the exit. The open area of the diffuser snout was 40 percent of the combustor inlet area. In reference 7, airflow in the combustor primary and secondary mixing

zones is described in detail for the configuration used in this investigation.

The liquid jet fuel conforming to ASTM A-1 specifications and the vaporized propane had average hydrogen-carbon ratios of 0.161 and 0.220, respectively, and lower heating values of 43 000 and 46 200 joules per gram (18 600 and 19 927 Btu/lb), respectively. Ignition was obtained with a capacitor ignitor with a maximum energy of 12 joules.

Multiple-orifice atomizers. - The specially designed multiple-orifice nozzle configuration shown in figure 3, with an attached flow distributor and air swirler, was used to inject fuel and water into the combustor primary zone. In liquid fuel tests, as shown in figure 2, ASTM A-1 fuel injected through the pressure-atomizing nozzle in the center of the atomizer was surrounded by eight water jets, which were broken up by the swirling airstream. In the propane tests, water atomized by the pressure-atomizing nozzle was surrounded by eight jets of vaporized propane. The spray angle of the pressure-atomizing nozzle was approximately 90°. Variation in flow rate with pressure drop is given in table I for the two fuels and water.

Instrumentation and Data Acquisition

Combustor instrumentation stations are shown schematically in figure 2, and detailed locations are given in reference 7. Inlet-air total temperature and pressure were measured at station 1 in the diffuser inlet with four stationary rakes consisting of two Chromel-Alumel thermocouples and three total-pressure tubes, respectively, in each rake. Wall static-pressure taps were centrally located in the top and bottom of the diffuser inlet. Combustor exhaust temperature and pressure measurements and smoke samples were obtained with the probe by traversing the combustor exit at station 2. As shown in figure 4, the probe consisted of 12 elements: five aspirating platinum/platinum-13-percent-rhodium thermocouples, five total-pressure tubes, and two wedge-shaped static-pressure tubes. Smoke samples were withdrawn through the aspirating thermocouple lines. Incremental travel and dwell time of the probe were automatically controlled. Combustor exit temperature and pressure data were recorded every 1.27 centimeters (0.5 in.) of travel at 23 locations across the combustor exhaust.

Sharp-edged orifices installed according to ASME specifications were used to measure airflow rates. ASTM A-1, liquid propane, and water flow rates were measured with pairs of turbine flowmeters connected in series to crosscheck their accuracy. Three pairs of flowmeters were required to cover the flow range of each liquid. The liquid propane was passed through a steam-heated vaporizer before it entered the flow divider. All data were recorded on a punched paper tape and processed by the Lewis data processing system.

Smoke Measurement

Exhaust smoke samples were withdrawn through the exhaust probe while it traversed the combustor exit. Smoke samples were passed through the smoke meter shown in figure 5, and smoke numbers were determined in accordance with SAE Aerospace Recommended Practice (ARP 1179, ref. 8). The sample-gas flow rate at standard conditions was 2.36×10^{-4} cubic meter per second (0.5 ft^3/min); and four smoke samples were obtained at each test condition with time durations of 12, 22, 36, and 72 seconds, respectively. Thus, average smoke numbers based on 1.623 grams of gas per square centimeter of filter (0.023 lb of gas/$in.^2$ of filter) were determined by plotting the smoke number against the weight of the gas sample per unit area of filter.

Pollutant Emission Measurement

Exhaust gas samples were withdrawn through the air-cooled stationary sampling probe shown in figure 6, which was mounted approximately 0.92 meter (3 ft) downstream of the traversing probe and in the center of the exhaust gas stream, as shown in figure 1. Exhaust pollutant concentrations of nitrogen oxides, carbon monoxide, and unburned hydrocarbons were determined with the gas-analysis equipment shown in figure 7 in accordance with Aerospace Recommended Practice (ARP 1256, ref. 9). The gas sample temperature was maintained at approximately 423 K (760° R) in the electrically heated sampling line. Most of the gas sample entered the analyzer oven, while excess flow was bypassed to the exhaust system. To prevent fuel accumulation in the sample line, a nitrogen purge was used just before and during combustor ignition.

After it passed through the analyzer oven, the gas sample was divided into three parts and analyzed accordingly. Concentrations of nitrogen oxides, carbon monoxide, and unburned hydrocarbons were measured by the chemiluminescence, nondispersed-infrared, and flame-ionization methods, respectively. Gas samples used to determine nitrogen oxides and carbon monoxide were passed through a refrigerated dryer and analyzed on a dry basis. Thus, readings for nitrogen oxides and carbon monoxide were corrected and reported on a wet basis, which was the same as that used for unburned hydrocarbons. Nitrogen oxide emission indices are expressed as grams of NO_2 per kilogram of fuel.

Calculations

The U.S. customary system of units was used in primary measurements. Conversion to SI units (Systems International d'Unites) were made for reporting purposes, only.

In making the conversion, consideration is given to implied accuracy and generally result in rounding off the values expressed in SI units.

Combustion efficiency. - Without water injection, the combustion efficiency (defined as the ratio of actual to theoretical temperature rise) was calculated from the inlet-air temperature and the average mass-weighted exit temperature obtained from the total number of temperature readings taken at the combustor exit plane. The effect of water injection on combustion efficiency was determined from gas analysis data. An emission index of 42.5 for CO or 10 for unburned hydrocarbons gave a reduction in combustion efficiency of 1 percent in each case.

Smoke number. - Smoke spots on the filter tape were analyzed with a reflective densitometer calibrated with a Welsh Gray scale. Smoke numbers, as defined in reference 8, were determined from the following expression:

$$\text{Smoke number} = 100(1 - r)$$

where r is the ratio of the percent of absolute reflectivity of the smoke spot to that of the clean filter tape.

RESULTS AND DISCUSSION

To compare the effects of primary-zone water injection on pollutant emissions with liquid ASTM A-1 and vaporized propane fuels, the combustor was operated at inlet-air pressures of 4 and 10 atmospheres and inlet-air temperatures of 590 and 700 K (1060° and 1260° R). Combustor fuel-air ratios were 0.014 and 0.018, and combustor reference velocity was 21.3 meter per second (70 ft/sec) for all tests.

Without water injection, combustion efficiencies calculated from exit temperature data averaged between 95 and 100 percent and were found to agree within ±5 percent of calculated values based on the unburned hydrocarbon and carbon monoxide concentrations determined in the gas samples. The effect of primary-zone water injection on combustion efficiency as determined from gas analyses data was relatively small. This result will be treated further in the discussion of CO and hydrocarbon emission data.

Carbon dioxide (CO_2) concentrations in the gas samples were determined, and fuel-air ratios calculated from a carbon balance agreed to within 15 percent of values obtained from fuel and air flow-rate measurements. Thus, representative samples were obtained from the exhaust gases. Emission indices for nitrogen oxides, carbon monoxide, and unburned hydrocarbons were determined for all the test conditions; and smoke numbers were calculated for most conditions.

Nitrogen Oxides

Emission data for nitrogen oxides as obtained with vaporized propane and liquid ASTM A-1 fuels are shown in figure 8 as a function of the water-air ratio (i.e., the ratio of the primary-zone water injection rate to the combustor airflow rate plus the initial inlet-air water-air ratio of 0.0003). Increasing the water-air ratio markedly reduced nitrogen oxides for all the test conditions. With propane fuel and an inlet-air temperature of 700 K (1260° R), NO_x reduction increased when the fuel-air ratio was decreased from 0.018 to 0.014. No appreciable effect of fuel-air ratio on NO_x reduction was observed with ASTM A-1 fuel. Substantial reductions in nitrogen oxides were obtained at inlet-air temperatures of 590 and 700 K (1060° and 1260° R) and an inlet-air pressure of 10 atmospheres with both fuels, and also with ASTM A-1 fuel at 4 atmospheres and 590 K (1060° R).

To compare reductions in nitrogen oxides obtained with different operating conditions and fuels, a plot of the ratio of NO_x emission indices (with and without water injection) as a function of the water-air ratio is shown in figure 9. From this plot, it is evident that the primary-zone water injection technique used in this study is quite effective in reducing nitrogen oxides, particularly at high inlet-air temperatures and pressures. Also, the greatest reduction in NO_x was obtained with propane fuel. However, a direct comparison of NO_x reduction between the two fuels can not be made. Some of the decrease in NO_x obtained with propane may be attributed to better atomization of the water injected through the pressure-atomizing nozzles. In the case of ASTM A-1 fuel, the eight-orifice showerheads were used to inject the water, and they gave a considerably coarser spray. A water-air ratio of 0.01 reduced NO_x emissions by approximately 75 and 65 percent with propane and ASTM A-1 fuels, respectively, at a fuel-air ratio of 0.014, a pressure of 10 atmospheres, and a temperature of 700 K (1260° R).

In comparison with the method used in reference 10, the technique used in this study is somewhat more effective in reducing nitrogen oxides. It is difficult to estimate exactly how much improvement was obtained since reference 10 does not give the inlet-air conditions. However, if it is assumed that reference 10 takeoff conditions are similar to those of curve C, the improvement is approximately 25 percent at a water-air ratio of 0.01. Thus, the technique used in this study would require substantially less water to be carried on board the aircraft to obtain the same reduction in nitrogen oxides as the method of reference 10.

Carbon Monoxide

The effect of primary-zone water injection on the CO emission index is shown in figure 10. Although increasing the water-air ratio tended to increase CO emissions,

initial values without water injection were quite low and decreased with increasing fuel-air ratio, inlet-air temperature, and pressure. With propane and ASTM A-1 fuels at 590 K (1060° R) and 10 atmospheres, a water-air ratio of 0.01 gave CO emission indices near 42.5, which corresponds to a 1 percent decrease in combustion efficiency. Water injection increased combustion inefficiency based on CO emissions from approximately 1/2 up to 1 percent, or in other words decreased combustion efficiency by only 1/2 percent. Also, at 4 atmospheres with ASTM A-1 fuel, a water-air ratio of 0.01 decreased combustion efficiency by approximately 1/2 percent as a result of increased CO emissions. Primary-zone water injection at a water-air ratio of 0.01 did not cause CO emissions to become prohibitively large.

Unburned Hydrocarbons

The effect of primary-zone water injection on the unburned hydrocarbon emission index is shown in figure 11. As expected, it responded in a manner similar to that of the CO emission index. Initial values without water injection were quite low and decreased with increasing fuel-air ratio and inlet-air temperature and pressure. A water-air ratio of 0.01 gave unburned hydrocarbon emission indices of approximately 5, which corresponds to a 1/2 percent decrease in combustion efficiency caused by unburned hydrocarbons. Water injection decreased combustion efficiency by approximately 1/2 percent as a result of the increase in unburned hydrocarbons.

Smoke Number

The effect of primary-zone water injection on smoke number is shown in figure 12. Initial values without water injection were considerably below the visible limit (i.e., a smoke number of 25±5) and remained well below that value even though water injection with propane tended to increase smoke number. With ASTM A-1, no apparent trend appeared when the water-air ratio was increased. The scatter in the data was attributed to the relatively poor atomization of water obtained by using the eight-orifice showerhead injectors. However, smoke numbers were always below the visible limit.

SUMMARY OF RESULTS

Effects of primary-zone water injection on pollutant emissions from a combustor segment were compared by burning liquid ASTM A-1 and vaporized propane fuels. Ex-

haust smoke number and emission indices for nitrogen oxides (NO_x), carbon monoxide (CO), and unburned hydrocarbons were determined. Gas analysis data were used to show the effects of water injection on combustion efficiency. Test conditions consisted of fuel-air ratios of 0.014 and 0.018, inlet-air temperatures of 590 and 700 K (1060° and 1260° R), and inlet-air pressures of 4 and 10 atmospheres. The following results were obtained with primary-zone water injection at 1 percent of the airflow rate:

1. Primary-zone water injection reduced the NO_x emission index from 16.6 to 4.4 (or 75 percent) with vaporized propane and from 18.0 to 6.0 (or 65 percent) with liquid ASTM A-1 fuel, at an inlet-air temperature of 700 K (1260° R) and an inlet-air pressure of 10 atmospheres. Although carbon monoxide and unburned hydrocarbons increased with water injection, they remained relatively low; and smoke numbers were considerably below the visible limit.

2. Primary-zone water injection proved more effective in decreasing NO_x emission when inlet-air temperature was increased from 590 to 700 K (1060° to 1260° R): 8 and 13 percent more effective with vapor and liquid fuels, respectively. However, the effect of primary-zone water injection on NO_x emission with liquid fuel did not appreciably change when inlet-air pressure was increased from 4 to 10 atmospheres.

3. Combustion efficiency was slightly lower with primary-zone water injection, as determined from CO and unburned hydrocarbon emission indices. The net decrease in combustion efficiency was approximately 1/2 percent from increased CO emissions and 1/2 percent from increased unburned hydrocarbon emissions.

Lewis Research Center,
National Aeronautics and Space Administration,
Cleveland, Ohio, March 9, 1973,
501-24.

REFERENCES

1. Roudebush, William H.: State of the Art in Short Combustors. Paper 68-22, ICAS, Sept. 1968.
2. Edelman, Raymond; and Economos, Constantino: A Mathematical Model for Jet Engine Combustor Pollutant Emissions. Paper 71-714, AIAA, June 1971.
3. Ingebo, Robert D.; and Norgren, Carl T.: High-Pressure Combustor Exhaust Emissions with Improved Air-Atomizing and Conventional Pressure-Atomizing Fuel Nozzles. NASA TN D-7154, 1973.

4. Grobman, Jack: Review of Jet Engine Emissions. NASA TM X-68064, 1972.

5. Singh, P. P.; Young, W. E.; and Ambrose, J. J.: Formation and Control of Oxides of Nitrogen Emissions from Gas Turbine Combustion Systems. Paper 72-GT-22, ASME, Mar. 1972.

6. Nicholls, J. E.; El-Messiri, I. A.; and Newhall, H. K.: Inlet Manifold Water Injection for Control of Nitrogen Oxides, Theory and Experiment. Paper 690018, SAE, Jan. 1969.

7. Ingebo, Robert D.; Doskocil, Albert J.; and Norgren, Carl T.: High-Pressure Performance of Combustor Segments Utilizing Pressure-Atomizing Fuel Nozzles and Air Swirlers for Primary-Zone Mixing. NASA TN D-6491, 1971.

8. Anon.: Aircraft Turbine Exhaust Smoke Measurement. Aerospace Recommended Practice 1179, SAE, May 1970.

9. Anon.: Procedure for the Continuous Sampling and Measurement of Gaseous Emissions from Aircraft Turbine Engines. Aerospace Recommended Practice 1256, SAE, Oct. 1971.

10. Cornelius, Walter; and Agnew, William G., eds.: Emissions from Continuous Combustion Systems. General Motors Research Laboratory, 1972, p. 369.

TABLE I. - MULTIPLE-ORIFICE-ATOMIZER FLOW-RATE VARIATION

WITH PRESSURE DROP

Fluid	Flow rate		Pressure-atomizing nozzle	Eight-orifice showerhead
	kg/hr	lb/hr	Pressure drop, atm	
ASTM A-1, liquid	21.6	47.6	0.19	-----
	90	198	3.30	-----
Propane, vapor	21.6	47.6	----	8
	90	198	----	40
Water, liquid	21.6	47.6	0.13	0.04
	90	198	2.25	.72

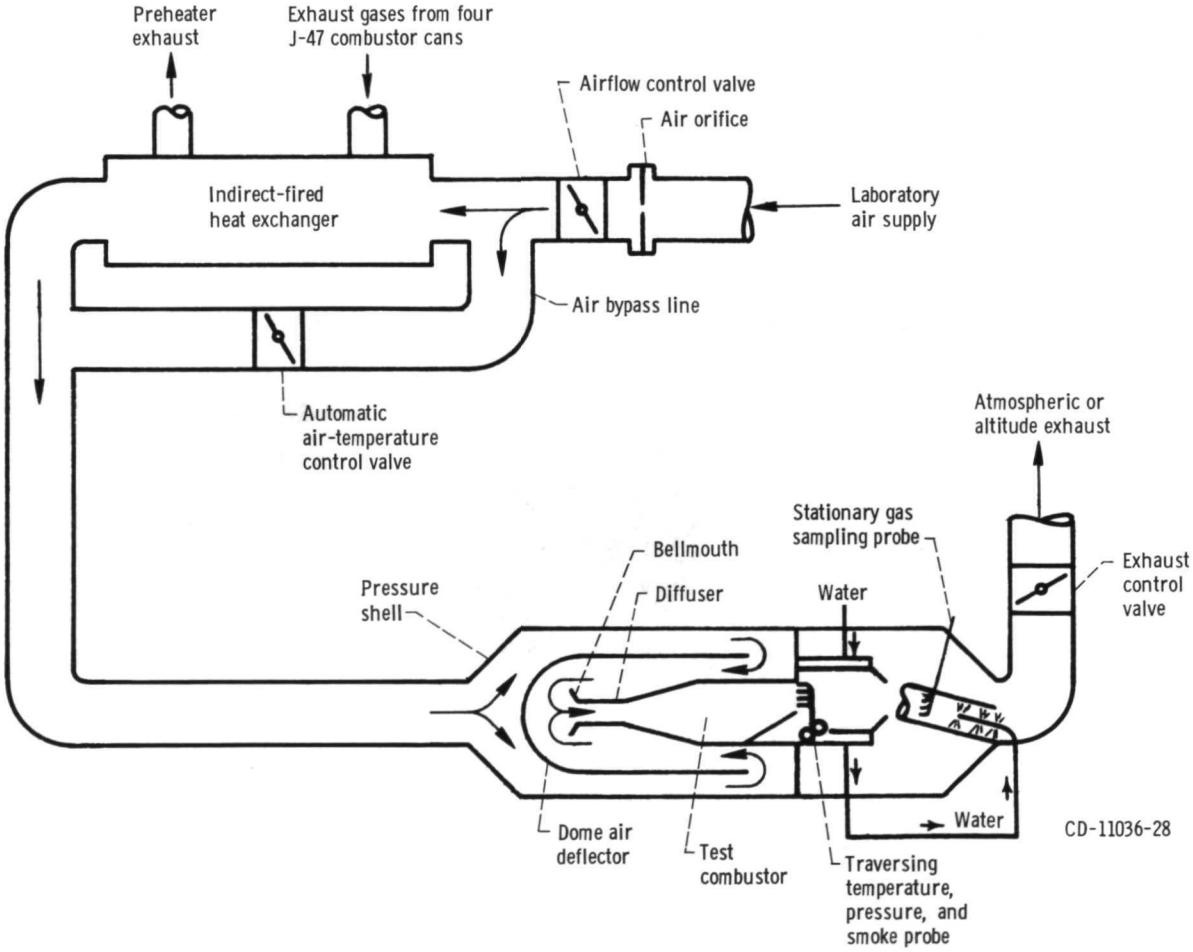

Figure 1. - Test facility and auxiliary equipment.

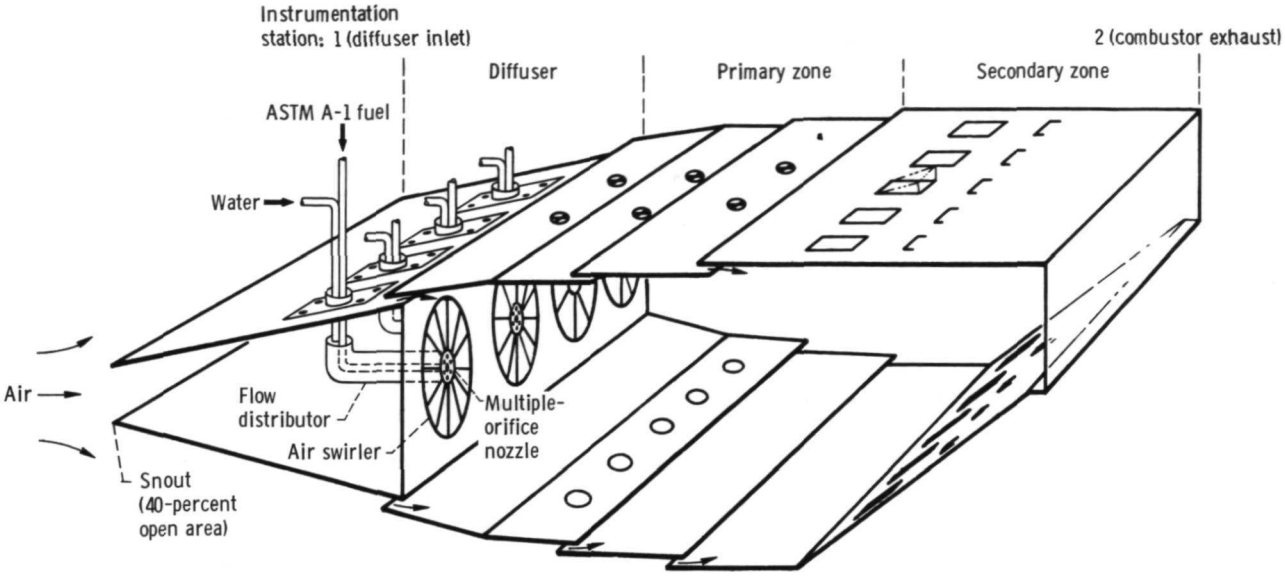

Figure 2. - Test combustor.

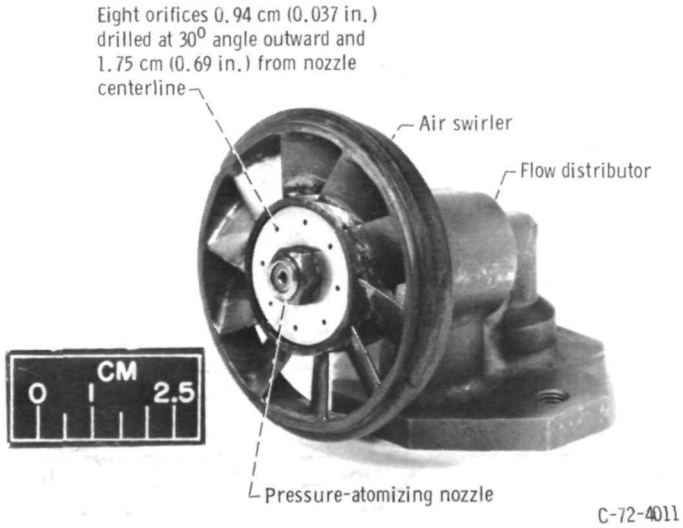

Figure 3. - Multiple-orifice nozzle assembly.

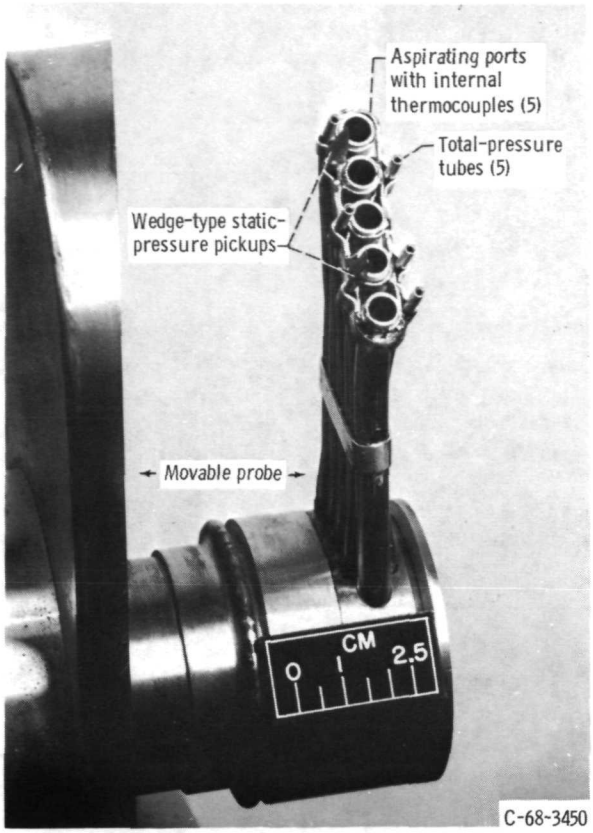

Figure 4. - Exhaust rake at station 2 (see fig. 2).

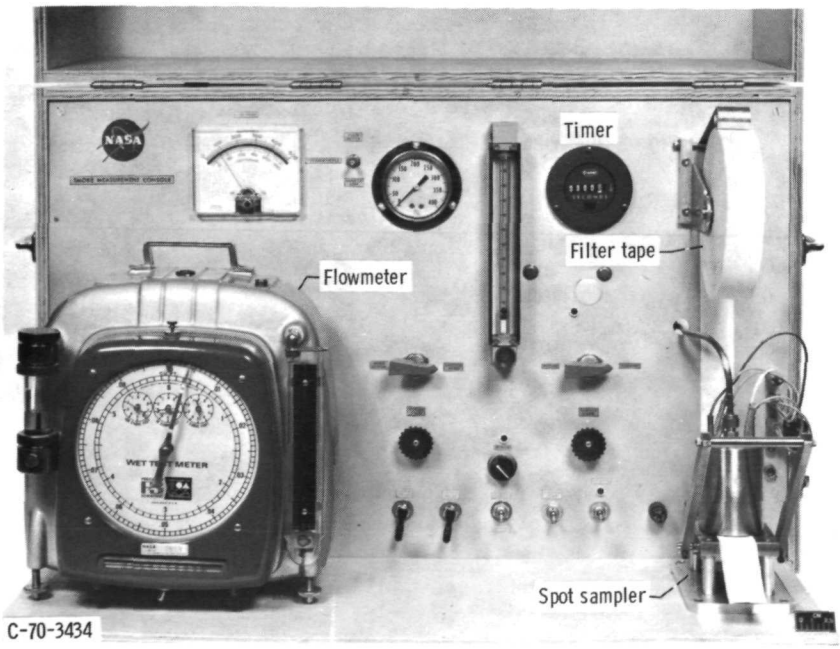

Figure 5. - Smoke meter.

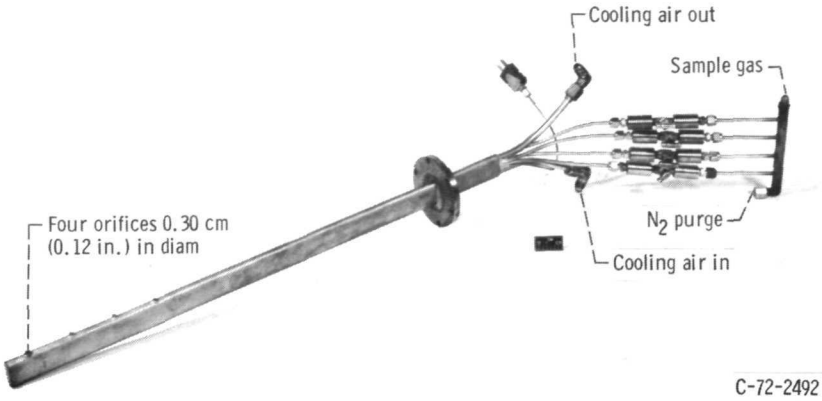

Figure 6. - Stationary gas-sampling probe.

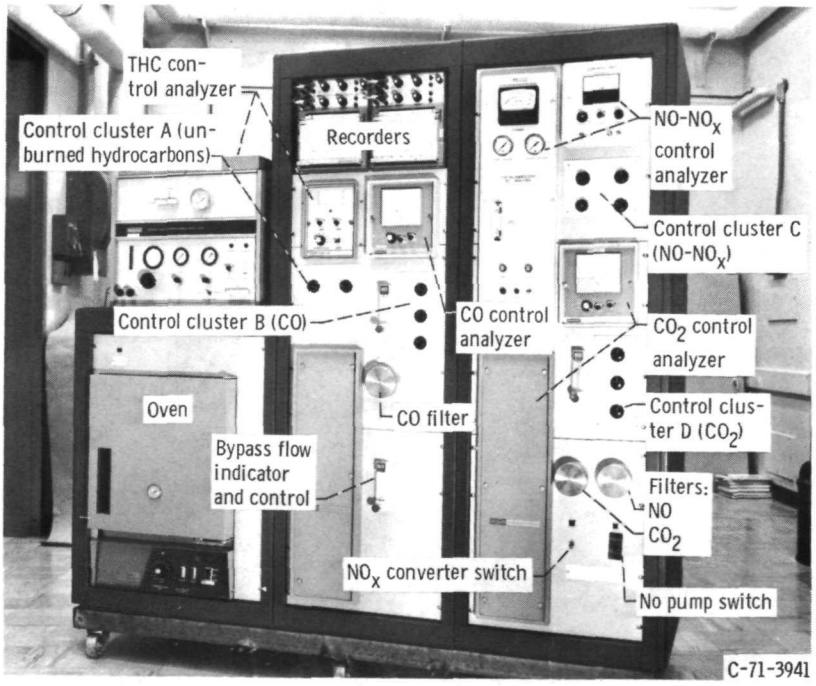

Figure 7. - Gas analysis equipment.

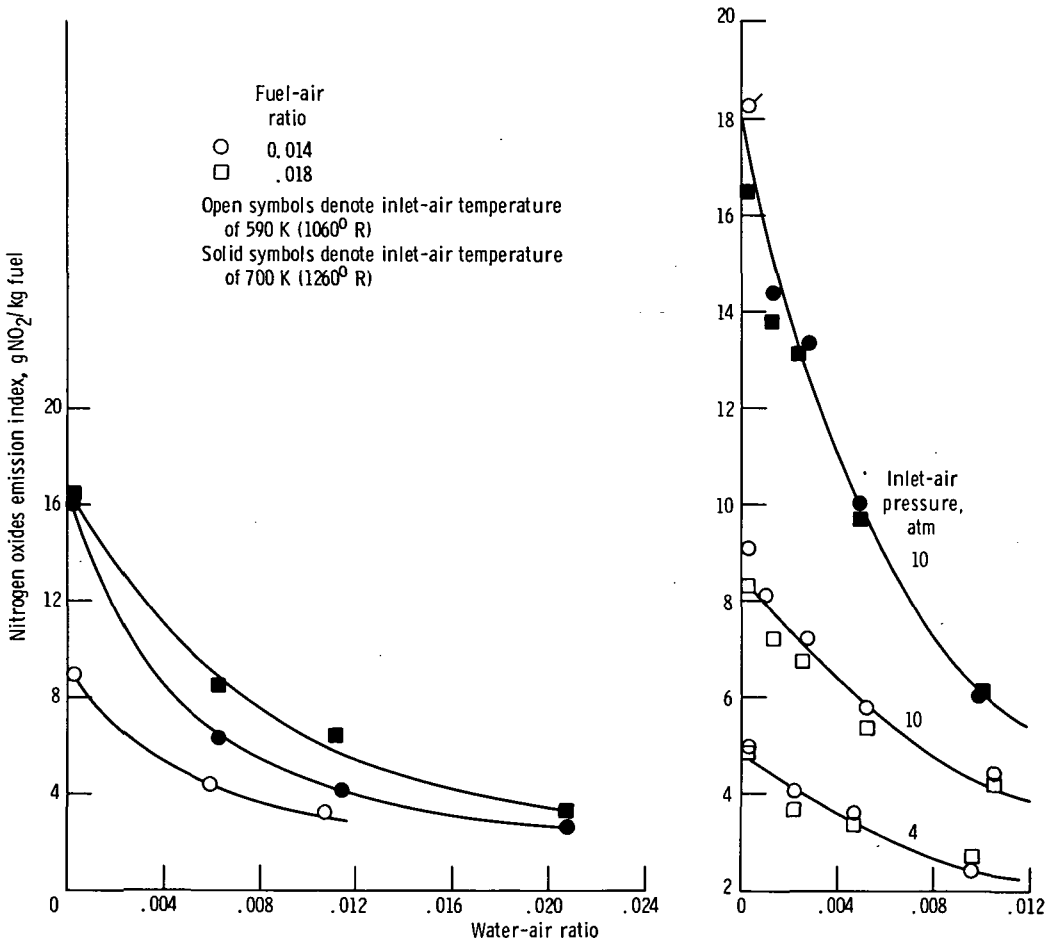

(a) Vaporized propane fuel; inlet-air pressure, 10 atmospheres.

(b) Liquid ASTM A-1 fuel.

Figure 8. - Effect of primary-zone water injection on formation of nitrogen oxides.

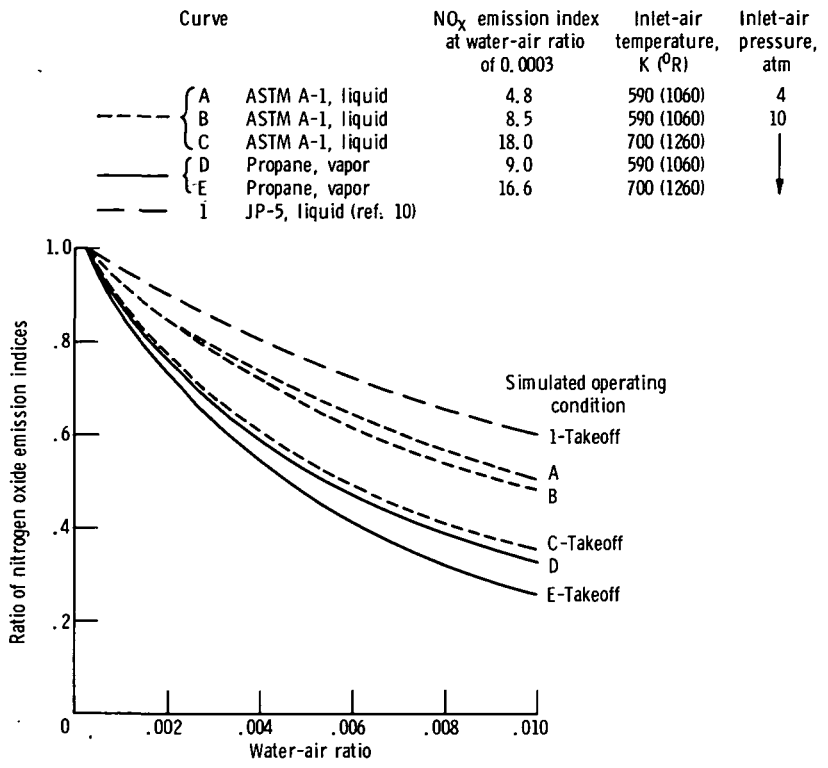

Figure 9. - Comparison of effect of primary-zone water injection on nitrogen oxide emission-index ratios for vapor and liquid fuels. Fuel-air ratio, 0.014.

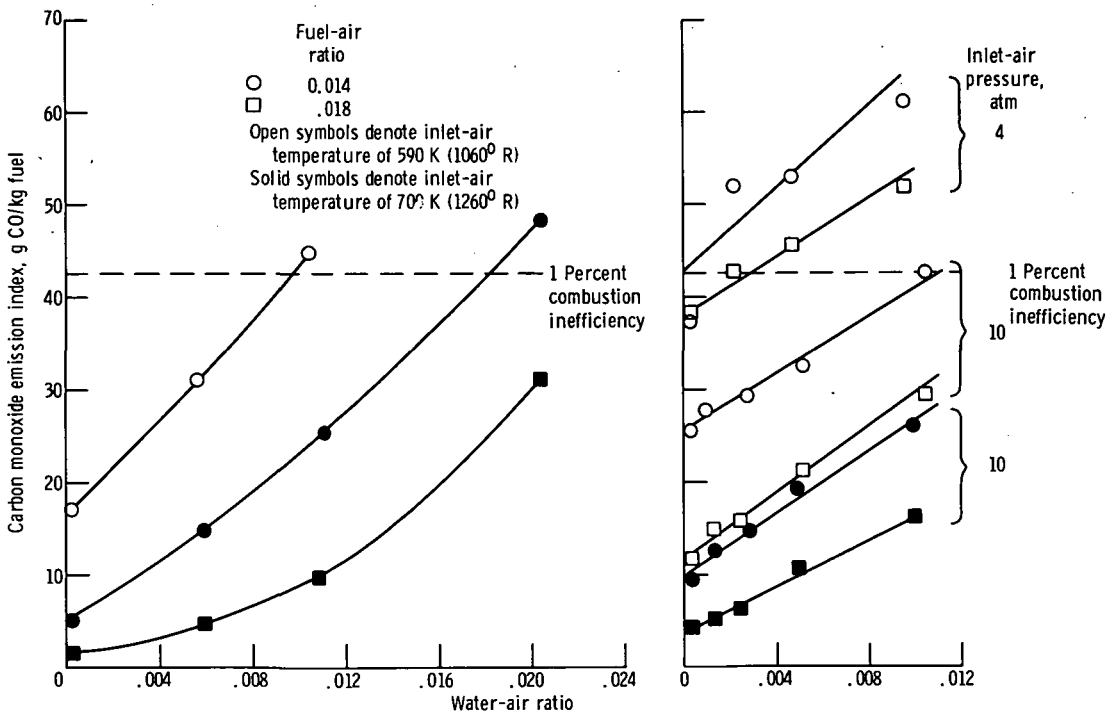

(a) Vaporized propane fuel; inlet-air pressure, 10 atmospheres.

(b) Liquid ASTM A-1 fuel.

Figure 10. - Effect of primary-zone water injection on formation of carbon monoxide.

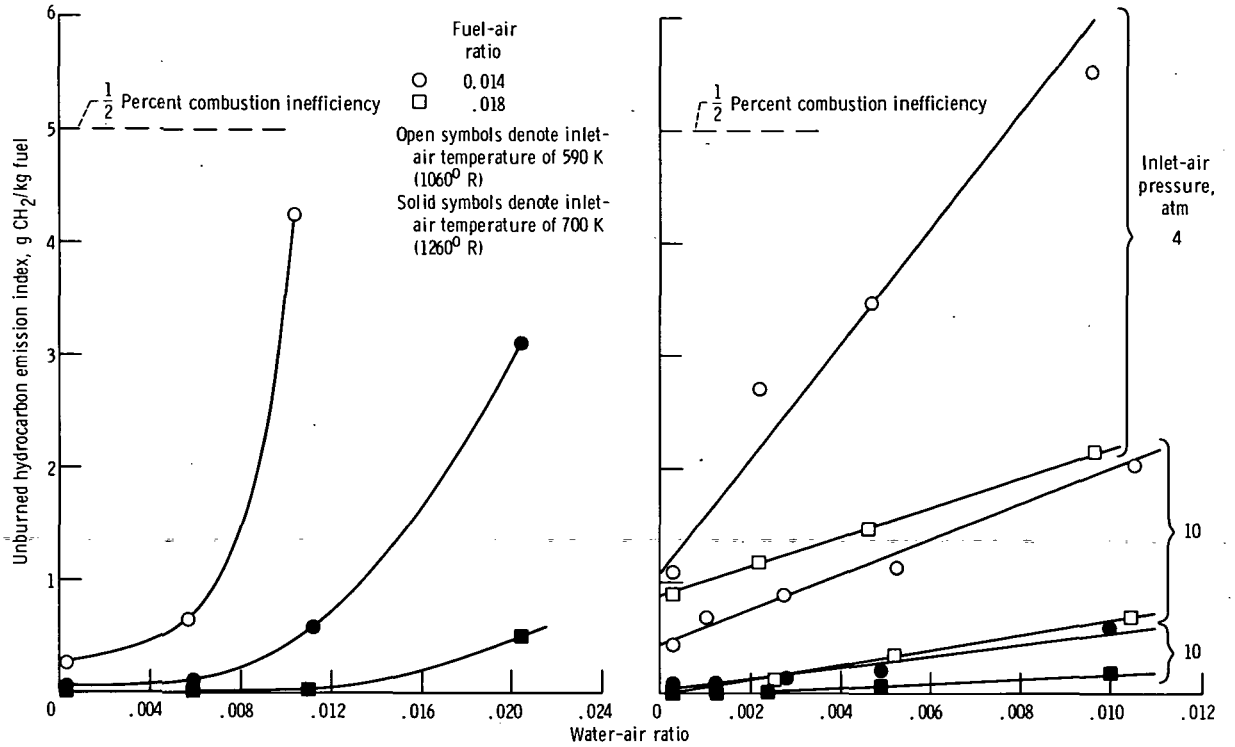

(a) Vaporized propane fuel; inlet-air pressure, 10 atmospheres.

(b) Liquid ASTM A-1 fuel.

Figure 11. - Effect of primary-zone water injection on formation of unburned hydrocarbons.

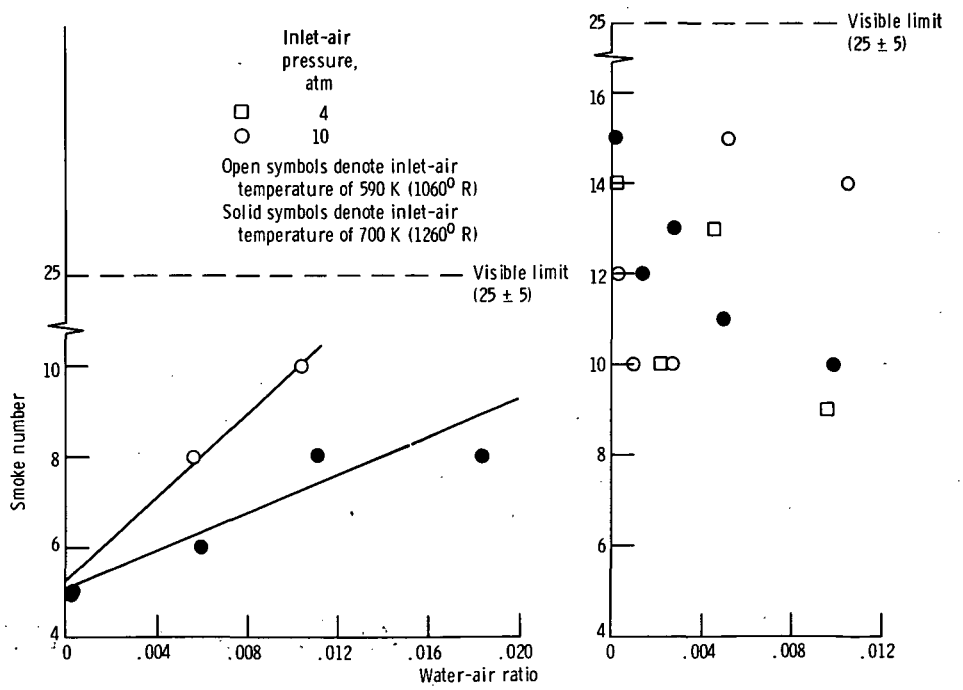

(a) Vaporized propane fuel; inlet-air pressure, 10 atmospheres.

(b) Liquid ASTM A-1 fuel.

Figure 12. - Effect of primary-zone water injection on smoke formation. Fuel-air ratio, 0.014.

NATIONAL AERONAUTICS AND SPACE ADMINISTRATION
WASHINGTON, D.C. 20546

OFFICIAL BUSINESS
PENALTY FOR PRIVATE USE $300

SPECIAL FOURTH-CLASS RATE
BOOK

POSTAGE AND FEES PAID
NATIONAL AERONAUTICS AND
SPACE ADMINISTRATION
451

U.S.MAIL

POSTMASTER: If Undeliverable (Section 158 Postal Manual) Do Not Return

"The aeronautical and space activities of the United States shall be conducted so as to contribute . . . to the expansion of human knowledge of phenomena in the atmosphere and space. The Administration shall provide for the widest practicable and appropriate dissemination of information concerning its activities and the results thereof."

—NATIONAL AERONAUTICS AND SPACE ACT OF 1958

NASA SCIENTIFIC AND TECHNICAL PUBLICATIONS

TECHNICAL REPORTS: Scientific and technical information considered important, complete, and a lasting contribution to existing knowledge.

TECHNICAL NOTES: Information less broad in scope but nevertheless of importance as a contribution to existing knowledge.

TECHNICAL MEMORANDUMS: Information receiving limited distribution because of preliminary data, security classification, or other reasons. Also includes conference proceedings with either limited or unlimited distribution.

CONTRACTOR REPORTS: Scientific and technical information generated under a NASA contract or grant and considered an important contribution to existing knowledge.

TECHNICAL TRANSLATIONS: Information published in a foreign language considered to merit NASA distribution in English.

SPECIAL PUBLICATIONS: Information derived from or of value to NASA activities. Publications include final reports of major projects, monographs, data compilations, handbooks, sourcebooks, and special bibliographies.

TECHNOLOGY UTILIZATION PUBLICATIONS: Information on technology used by NASA that may be of particular interest in commercial and other non-aerospace applications. Publications include Tech Briefs, Technology Utilization Reports and Technology Surveys.

Details on the availability of these publications may be obtained from:

SCIENTIFIC AND TECHNICAL INFORMATION OFFICE

NATIONAL AERONAUTICS AND SPACE ADMINISTRATION

Washington, D.C. 20546