N73 24069

NASA TECHNICAL MEMORANDUM

NASA TM X- 68231

NASA TM X- 68231

CASE FILE COPY

NUCLEAR AIR CUSHION VEHICLES

by John L. Anderson
Lewis Research Center
Cleveland, Ohio 44135

TECHNICAL PAPER proposed for presentation at
American Ordnance Association
Washington, D.C., May 8-9, 1973

NUCLEAR AIR CUSHION VEHICLES

by John L. Anderson

Lewis Research Center

E-7442

SUMMARY

This paper serves several functions. It identifies the "state-of-the-art" of the still-conceptual nuclear air cushion vehicle, particularly the nuclear powerplant. Using mission studies and cost estimates, the report describes some of the advantages of nuclear power for large air cushion vehicles. The paper also summarizes the technology studies on mobile nuclear powerplants and conceptual ACV systems/missions studies that have been performed at NASA Lewis Research Center.

INTRODUCTION

The air cushion vehicle or ACV is a relatively new vehicle. In 17 years it has developed from "table-top" demonstration to commercial vehicles carrying more than a million passengers each year.

Small ACVs, up to about 200 tons, appear to be both technically and economically practical. Based on this success, the design studies for 2000-3000 ton ACVs, and the opinion of experts in the industry, ACVs up to 10 000 tons seem clearly feasible. However, if large, multi-thousand ton ACVs must use chemically-fueled powerplants, their payload/range capability and hence, their usefulness will be limited.

Nuclear powerplants could offer distinct advantages in payload, range, and cost for large ACVs. The energy density of nuclear fuel could provide:

(1) Nearly unlimited ACV range without refueling and relatedly, energy independence and reserve endurance in remote areas, such as the Arctic;

(2) A larger "revenue-cargo" volume (which would have been taken up by the chemical fuel) as the vehicle power and range requirements get larger. Figure 1 (data from reference 1) shows that for ranges beyond about 2000 nautical miles a nuclear ACV would carry more payload than a "current-technology" chemical ACV of the same gross weight. The difference between the two would increase as the range increases so that at a transatlantic distance (3500 n. mi.) the nuclear ACV would have twice the payload of the chemical ACV. At a transpacific distance (6000 n. mi.) the nuclear ACV payload would be four times the chemical ACV payload.

(3) Lower cost in two respects. First, by analogy to land-based and merchant marine nuclear powerplants, the lower nuclear fuel cost should more than offset the higher nuclear capital costs. Second, the fuel/payload tradeoff that varies with range in chemical ACVs favors the nuclear ACV for transoceanic voyages.

However, civilian marine nuclear powerplants cannot be used for ACVs because they are too heavy. On the other hand, technology studies at NASA Lewis Research Center (refs. 2 to 14) have indicated that much lighter (by a factor of 10) mobile nuclear powerplants are technically feasible and could be safely used at ACV speeds.

The purpose of this report is to identify the "state-of-the-art" of the still-conceptual nuclear ACV and to describe some of the advantages of nuclear powering of large ACVs. To do this the report summarizes technology studies on mobile nuclear powerplants and conceptual ACV systems studies that have been performed at NASA Lewis Research Center and are described in references 1 to 20. The purpose of the technology studies has been to demonstrate feasibility of key components of a lightweight mobile nuclear powerplant - long-life fuel elements, impact survivability, meltdown survivability, and lightweight shield design. The purposes of the conceptual ACV systems studies have been to identify missions for large, multithousand ton ACVs (both chemically and nuclear powered), to estimate ACV operating costs, to identify their role in the transportation network, and to identify some of

the social and economic implications of large ACVs.

These studies have not considered the use of the hybrid, "rigid-sidewall" ACVs or surface effect ships because they are restricted to water. Given the energy abundance of a nuclear powerplant, the mobility and surface independence offered by the pure ACV is a freedom that cannot be ignored.

LARGE AIR CUSHION VEHICLES

Background information on large ACVs and/or mobile nuclear powerplants has appeared in references 21 to 25, and in the more specific NASA Lewis work described in references 1 to 20. Reference 21 is a technical and economic evaluation of a large chemically powered surface effect ship weighting 5000 metric tons. Reference 22 is a comparative study of five ACV designs for chemical vehicles up to 9000 metric tons. Parametric studies of nuclear ACVs have been presented in reference 15 and 16; economic performance has been estimated in references 1, 19 and 20; and missions studies are described in references 18 to 20, and 23. Other work at NASA Lewis on the benefits and emerging needs (vehicles, remote stations, and machines) for and feasibility of mobile nuclear powerplants in general has been described in references 24 and 25.

The NASA Lewis conceptual ACV designs described in references 17, 19 and 20 have formed the base from which to assess the feasibility of mobile nuclear powerplants, to estimate costs, and to identify missions and their social and economic implications. This section summarizes these ACV freighter designs. Although the British peripheral skirt concept (ref. 26) is used for the designs rather than the French multiple skirt concept (ref. 27) further studies are needed to determine which arrangement is better for such a freighter and its likely missions.

Conceptual Design Comparison

Figure 2 shows an artist's conception of a nuclear-powered ACV freighter with a gross weight of 4535 metric tons that was described in reference 17; it is shown schematically in figure 3. Figure 4 shows a later design of an ACV flatbed freighter (ref. 20) with a gross weight of 9070 metric tons. A 9070-metric-ton chemically-powered ACV tanker is shown in figure 5 (ref. 19). (Admittedly the oil tank configuration is probably more symbolic than realistic.)

The operating and design parameters for these three freighters are compared in table I. The variations in lift-to-drag ratio and specific power are partly results of starting the design with different assumptions (see footnote d in table I). For the 4535-metric-ton freighter the drags were calculated; then the thrust power needed was determined from a thrust-to-shaft horsepower ratio (T/SHP) appropriate to a prop-fan at 100 knots and then added to the lift power. For the 9070-metric-ton nuclear ACV Arctic freighter a lift-to-drag ratio appropriate to an ACV at 100 knots was chosen from figure 6 (from ref. 1) and then the power calculated.

The specific power for each of the 100-knot nuclear ACV freighters is about 70 horsepower per ton. For the 9070-metric-ton chemically powered ACV tanker a specific power of 30 horsepower per ton was chosen (representative of multithousand ton ACVs at 60 knots according to a consensus of literature). This lower specific power was also partly justified by the use of air propellers with higher T/SHP.

Weight Assumptions

The ACV freighters were conceptually designed using the formulae and techniques or references 15 and 16. A full list of design parameters for one ACV freighter is given in reference 17. The weight equations for the nuclear ACVs (from ref. 15) are shown next.

$$\text{Gross, } W_{GR}\text{, metric ton}$$

$$\text{Shield, } W_{SH} = 10.5\times10^3\sqrt{Q_R(\text{MW})}\text{, metric ton}$$

$$\text{Powerplant (2 lb per shaft hp), } W_{PP} = 0.907\ P_T\text{, hp}$$

$$\text{Structure, } W_{ST} = 0.175\ W_{GR} + 24.5 \cdot \text{Plan area } (\text{m}^2)$$

$$\text{Chemical fuel, } W_F = W_{GR}(1 - e^{-\alpha})$$

From Breguet range formula for chemically powered aircraft:

$$\alpha = \frac{R \cdot \text{sfc}}{\left(\frac{L}{D}\right) 550\ \eta_L}$$

where R is the range (n.mi.), sfc is the specific fuel consumption (lb/hr/hp), and L/D is the lift to drag ratio.

$$\text{Payload, } W_P = W_{GR} - W_{SH} - W_{pp} - W_{ST} - W_F\text{, metric ton}$$

$$\text{Lift-to-drag ratio, } \frac{L}{D} = \frac{W_{GR}(\text{lb}) \cdot V_o(\text{knots})}{326\ \eta P(\text{hp})}$$

(where $\eta P = \eta_f P_{Lift(hp)} + \eta_L P_{Thrust(hp)}$)

NUCLEAR POWER SYSTEM

The power for conceptual nuclear ACV freighter is supplied by a gas-cooled thermal reactor and steam turbine system (fig. 7). Air for the cushion and for propulsion enters through louvers on the top of the craft. The air is pressurized by the fans and then passed over condensers, which contain the turbine exhaust steam. The warmed, pressurized air from the lift fans goes into a plenum from which it is dis-

tributed to the peripheral jets. Under normal operation the steam comes from a boiler heated by the hot gas from the reactor. During an emergency, steam is generated in a chemically fired boiler (fig. 7). The freighter will carry enough reserve chemical fuel for a 925-kilometer (500-n. mi.) range at reduced speed.

Powerplant

A schematic for this conceptual reactor primary coolant loop is shown in figure 8. A range of operating conditions for the reactor and steam system that could produce a powerplant light enough for a nuclear ACV is shown in table II. A range is specified because a precise set of conditions for minimum powerplant weight and maximum payload has not yet been defined.

Furthermore, this gas-cooled thermal reactor and steam turbine system described here should only be considered typical of the reactor - cycle systems available. Other reactors may be the fast, liquid-metal cooled or the molten-uranium fueled and salt-cooled. (Some sources of technology for lightweight reactors are given in a following section.) Other cycles may be used, for example, the open-air Brayton, the closed Brayton, or the low-vapor-pressure (potassium) Rankine. Further study of all these systems is needed to determine which gives the lightest powerplant or the most payload or, more generally, which results in the most economic vehicle.

The gas-cooled thermal reactor core is shielded by a combination of borated water and tungsten or depleted uranium metal (fig. 8; ref. 3). The outer diameter of the shield would be from 7 to 9 meters (about 25 to 30 ft). Just outside the shield, the radiation level would be reduced to the maximum permissible general population level, 0.25 millirem per hour.

Comparative Size

In figure 9 the conceptual lightweight airborne reactor is compared to a representative advanced marine reactor. This size comparison illustrates the volume (and weight) savings that could be gained by development of a lightweight mobile reactor. The analytical and experimental studies described in references 2 to 4 have indicated that an airborne reactor and shield could be contained within a spherical containment vessel less than 9 meters in diameter and that the weight could be about one-tenth the weight of marine reactors.

Each of these mobile reactor concepts (marine and airborne) would produce 300 MWt. The CNSG IV reactor system (ref. 28) (actually designed to produce 314 MWt) has a volume of about 1800 cubic meters and a weight of 500 tons, excluding the biological shield. With the biological shield (concrete aggregate) the CNSG reactor system weighs more than 2000 tons. In contrast, the conceptual gas-cooled airborne reactor would have a volume of about 100 cubic meters and a weight of 210 metric tons, including the biological shield. For the CNSG reactor the radiation dose rate is about 1 millirem per hour at the outer surface of the shield. For the compact airborne reactor the dose rate would be about 4.5 millirem per hour just outside the shield (radius 2.9 m) and about 0.25 millirem per hour at 9.15 meters from its spherical center. However, it must be pointed out that the CNSG marine reactor is being built while the "much-lighter-weight" airborne reactors are still in the early conceptual stages.

Another interesting comparison is of the dimensions of 1000 MWt conceptual airborne reactor to an equivalent power, conventional land-based reactor (fig. 10). In each case the shield reduces the dose rate at the outer shield surface to that rate permissible for the general population (0.25 mrem/hr). This dose constraint is one-tenth of the exposure limits set for radiation workers and is derived from quarterly dose constraints set forth in Title 10, CFR, Part 20.

Technical Feasibility

It is not clear yet what the best reactor concept is for airborne use, in contrast to the prevalence of pressurized water reactors for present and planned marine use. However, civilian studies have tended to favor the gas-cooled reactor concept, with liquid metal cooling being the next choice. The technology for these reactors may also come from several sources: (1) high-temperature, gas-cooled land-based power reactors (HTGR's), (2) advanced space nuclear power systems, some of which are outgrowths of SNAP programs, and (3) technical feasibility studies of airborne nuclear reactors. However, the termination of work on space and airborne nuclear power and propulsion within NASA will freeze the technology that is available from this source. Hence, the HTGR's will provide a more useful, as well as a developing technology base.

A high-temperature, helium-cooled thermal reactor (300 MWt) for airborne use (refs. 10 and 11) might have a reactor coolant outlet temperature of about 750° C and a helium pressure of about 1070 newtons per square centimeter (1500 psi) (see table II). Some of the high-temperature materials and gas-cooling system technology may come from land-based electricity generating plants which entered the commercial market in 1971. The twin reactors (from Gulf General Atomic) for a Philadelphia Electric power station will have core outlet temperatures of about 765° C and a gas pressure of about 500 newtons per square centimeter (700 psi) (ref. 29; each reactor will have a thermal output of 3000 MW.

Space nuclear reactor power systems, which include the even-numbered SNAP systems such as 10A and 8, have had development goals of compactness, lightweight, and long-term reliable, unattended operation, some of which were more stringent than applications to ACVs would be. The SNAP 8 program evolved into a zirconium hydride (ZrH) reactor program (with thermoelectric power conversion) at Lewis Research Center under the joint support of NASA and the AEC

(administered by the Space Nuclear Systems Office). A technology base for the thermoelectric power conversion system has been provided by the SNAP 10A program. The ZrH reactor (NaK coolant, thermal spectrum) would produce 100 MWt and generate 5 kWe from the thermoelectric elements.

An advanced power reactor (lithium coolant, fast spectrum) has also been investigated at Lewis with the experimental criticality work being done by Atomics International. A reference design of this reactor calls for a 2 MWt output for 50 000 hours (ref. 30). Efforts were underway in materials compatibility and irradiation effects, bearings and seals, reactor physics and reactor control.

The terminated nuclear rocket program, NERVA, provides a technology base for uranium carbide fuel in a graphite matrix, using hydrogen coolant.

Investigations of airborne nuclear powerplant technology at NASA Lewis Research Center have stressed long-life fuel pins and heat exchangers, optimized shield design, and impact and meltdown safety. The results of these investigations have been described in references 2 to 14 and are summarized below.

The fuel pin concept that has been proposed is shown schematically in figure 11; the experimental components are shown in figure 12. The pin consists of a tube that is designed as a pressure vessel. Fuel is contained within the pin in a thin layer relative to the thickness of the tubular pressure vessel. The objective is to assure that the fuel material is weak compared to the clad strength so that when the fuel expands due to the buildup of fission products within it, the fuel will flow plastically into the central void without introducing significant strains in the strong clad material. The void also provides room for the gaseous fission products to expand. Tests results of pins based on this principle are shown in table III. One pin achieved 21 percent burnup of the heavy atoms without failing. For comparison in commercial power reactors only 3 percent burnup of the heavy atoms is achieved. A more meaningful comparison is energy density, which is 8300 kw hr/cc for

the strong clad pin compared to 6000 kw hr/cc for commercial fuel pins.

For an ACV nuclear powerplant the heat exchanger material will limit the turbine inlet temperature. Tests have been conducted to determine creep properties of high temperature oxidation resistant materials for heat exchangers. A suitable alloy was N-155 (ref. 12). This material is ductile, can be welded, worked, and machined readily; it can operate at temperatures up to 800° C.

A high pressure helium header (fig. 13) for the heat exchanger was designed to operate for 1500 hours at a pressure of 1000 psi and temperature of 840° C; it ran more than 5000 hours before it failed.

The reactor shield is the heaviest part of the nuclear powerplant and hence, directly affects its feasibility. Furthermore, nuclear powerplants for vehicles should use unit or 4π shields to reduce the radiation dose to allowable levels in all directions. In the shield weight optimization studies described in references 2 to 4, the dose level at 9 meters from the reactor center is reduced to that allowable for the general population (0.25 millirem per hour). Using Monte Carlo analysis and optimizing techniques the shield materials, layer thicknesses, and layer order were varied to minimize the shield weight. Results of these calculations for depleted uranium - water shields are shown in figure 14.

The safety problem of preventing radioactivity release as a result of an impact accident is a critical one. There are two stages of an accident. First, the kinetic energy of the reactor-shield-containment vessel (RSCV) system must be absorbed during the impact without rupturing the containment vessel. Second, after the impact, the thermal energy from decaying fission products must be transferred from the RSCV system without rupturing the containment vessel. Safety during an accident will also require prevention of uncontrolled criticality. This might be accomplished by designing the reactor so it can be made subcritical by neutron-poison addition or moderator removal. Radar sensing of impending impact situations would automatically activate

the reactor shutdown, the switch to chemical power, and the closing and sealing of penetrations of the containment vessel.

Two techniques for kinetic-energy absorption have been examined in the technology program at Lewis. One technique would surround the containment vessel with a material configuration that is highly energy-absorbing such as balsa wood, frangible tubes, or metal or plastic honeycomb (fig. 15). This passive technique appears reasonable for impact velocities up to about 100 meters per second (180 knots) (ref. 11). Above this speed another technique may be necessary.

The other energy-absorbing technique examined has been simply the deformation of the containment vessel itself. In fact, the reactor shield-containment vessel system (RSCV) would be designed so that all parts of the RSCV system would serve multiple purposes, one of which would be to absorb kinetic energy. Simulated RSCVs (two-foot-diameter valveless models weighing about 450 kg (1000 lb) each) have impacted concrete at velocities from 73 to 320 and 332 meters per second (240 to 1055 and 1090 ft/sec) without rupturing (refs. 5 to 7) (figs. 16 and 17). There have also been impact tests involving ground burial (ref. 8).

After an impact the second stage of the accident safety problem would occur - potential meltdown. To overcome this the reactor and safety system must be designed so that the heat from decaying fission products will not melt through the containment vessel. Preliminary studies indicate that for ACV's either of two approaches is feasible in principle. One approach is to provide enough impact energy absorber around the RSCV to ensure that the shutdown cooling system will function after an impact.

Another approach is to design an RSCV which will permit the core to melt, but not melt through the containment vessel (CV). An additional requirement is that this design must work regardless of the direction of impact of the RSCV (or vehicle) or the orientation of the RSCV after impact. This approach to meltdown has been discussed in references 10 and 11. Conceptually, the heat redistribution process in such an RSCV would be as follows:

By design, uranium dioxide (UO_2) would reside as a spherical shell of granular particles on the inside of the reactor vessel (see fig. 8). After an impact the high-density, high-melting-point UO_2 would act as an insulating material between the CV and pool(s) of melted core material floating on the UO_2. Some of the UO_2 will melt but since it has a higher density than the molten core, it will stay in place and act as a liquid insulator (ref. 42). The decaying fission product heat sources in the molten core would be boiled off and carried by vapor transport to materials above the pool or to the inside wall of the CV where they would condense and be deposited. This vapor transport should thus more uniformly distribute these heat sources in the CV causing the pool to solidfy. The heat flux to the outside of the CV must be fairly uniform so that the CV can be cooled by convection and radiation to the medium in which it is immersed; any pumped cooling system is assumed to be inoperable because of the impact.

A schematic of an experimental apparatus to test this meltdown concept is shown in figure 18. A photograph of the apparatus, which is essentially a model of a reactor and containment vessel, is shown in figure 19. In this photograph one-half of the spherical "containment vessel (CV)," the cylindrical "reactor-vessel," and 7 fuel pins in a hexagonal array are shown. The "CV" has a 13.4 cm outside diameter, the "reactor vessel" has a length and an outside diameter of 4.4 cm, and each fuel pin is about 3.9 cm long and 1.3 cm in diameter. For the experiment the assembled spherical "CV" was filled with UO_2 granules and the apparatus was positioned in the Plum Brook Reactor with the "reactor vessel" on its side.

Analysis of the temperature and pressure behavior of the apparatus monitored during the experiment indicated that the expected meltdown and heat redistribution process did occur.

A power increase in the apparatus indicated an outward progression of UO_2 toward the "CV" had occurred. From the measured "CV" surface temperature of about 830° C a back-calculation of the fuel pin temperature, assuming no melting, showed that a temperature consider-

ably above the fuel pin melting point would have been necessary.

Figure 20 is a neutron radiograph (2 views) of the apparatus after exposure in the Plum Brook Reactor. The top radiograph shows that the horizontally positioned fuel pins twisted about a vertical axis during the test. This was probably due to nonuniform heating and melting of the materials (which is, in turn, due to the spatial variation of neutron flux within the reactor). The bottom radiograph shows that the top fuel pins did indeed melt and flow down among the bottom pins which appear to be still intact (sharp edges at the bottom of the fuel mass). The stainless steel "reactor vessel" had begun to melt and flow into the surrounding UO_2 granules. The power was later doubled without significant changes in the model CV temperature distribution. Neutron radiographs have not yet been made at the higher power.

This meltdown concept and proof-of-principle experiment may have much broader implications than for just a nuclear-powered ACV. It may be the basis for a solution to the loss-of-coolant accident, a matter of considerable current importance for commercial nuclear powerplants.

Until this point this section has discussed the feasibility of reactors. Another important part of a power system, of course, is the subsystem that converts the reactor heat to a more usable form, electricity or shaft rotation, for example. Again, the requirements of aerospace power systems, compactness and light weight, may make their technology useful for mobile nonspace nuclear power systems.

Coupled with the space reactor development at Lewis is the development of dynamic power conversion systems. The status of several of these systems is given in reference 31. One important aspect of these dynamic power systems is that they are capable of providing electrical power over a broad range, a few kilowatts to thousands of kilowatts. They are also efficient, which will contribute to low fuel needs and hence compactness and light weight of the reactor system.

The Brayton power conversion system seems particularly attractive because of its versatility and its technical status as described in

reference 32. An overall efficiency of 30 percent appears readily attainable for Brayton power systems of 10 kWe output and above. "... in comparison with competitive power systems, the Brayton system offers the best change for a successful reactor because of its low demand for heat, the high fuel-volume fraction that is possible, the simple reactor construction, the tolerance of fuel swelling, and even the comparatively low reactor-fuel temperature (ref. 32).

"It is important to recognize that the Brayton-cycle technology derived from the NASA program is broadly applicable to undersea and terrestrial applications as well as space missions (ref. 32)." (The reactors that were being developed by NASA for space missions might well have a similar applicability.)

The major components of three power conversion systems for space reactors have successfully operated for several thousand hours. For the SNAP mercury-Rankine conversion system, every major component has successfully operated for at least 10 000 hours; the complete conversion system was tested for 7320 hours without replacement of any of its components. A 10 kWe Brayton rotating unit (turbine, alternator, and compressor) recently completed a 10 000-hour endurance run; for over 9000 of these hours the test had no one present and was controlled by a computer. As for static energy conversion the SNAP 10A thermoelectric system was ground tested for 10 000 hours (during 1965-1966) without failure.

Commercial Feasibility

This section summarizes three sources of information relating to nuclear power costs. The first is the growing number of land-based nuclear powerplants (built and ordered). The capital costs of a nuclear powerplant are higher than for an equivalent fossil power plant. But nuclear fuel has become cheaper than fossil fuel per unit of energy, enough that the nuclear system total life cost can now be lower than the cost of the fossil system. Furthermore, as the power level increases,

the nuclear system increases its economic advantage over the chemical system because of the increasing importance of fuel costs and the greater "economy of scale" offered by nuclear power (that is, the cost per unit of output power decreases as the total output power increases). Although not a mobile use of nuclear power, this example shows that at least for the less-technically-demanding, stationary land use, nuclear fueled power is now cheaper than fossil-fueled power (above some minimum power level that depends on several factors). Reference 33 discusses the trends in nuclear powerplant costs.

The second source is recent detailed economic studies for merchant shipping (refs. 28, 34, and 35). Several developments have brought about a substantial improvement in the economic attractiveness of maritime nuclear propulsion as compared to the picture as recently as 5 years ago. From reference 34. "The growth in population and in the volume of world trade has brought about a parallel and dramatic growth in ship sizes and propulsion power levels. The growth will accelerate...At higher power levels, nuclear powerplants for ships become more economical. Concurrent with the increase in the price of fossil fuels and a growing uncertainty regarding fuel availability. Meanwhile, as a consequence of the maturation of the central station nuclear electric power industry and advances in nuclear technology, the cost of nuclear fuel has decreased significantly in recent years."

The potential economy of nuclear power for merchant shipping has given rise to the Nuclear Propulsion program of MARAD (refs. 28 and 34) and the projection of the Japan Atomic Industrial Forum that there will be 280 nuclear container ships by the year 2000 (ref. 36).

The third source of information is from cost studies of conceptual vehicles - large air cushion vehicles and very large aircraft powered by mobile nuclear powerplants. Comparison of costs for nuclear versus chemically fueled air cushion vehicles (ACVs) appears in reference 1. These results are summarized in figure 21. Further, ACV cost estimates also constitute a major part of two ACV systems studies relating to the Arctic (refs. 19 and 20).

Another aspect of commercial feasibility is market demand. Given that nuclear ACVs are cheaper than chemical ACVs above certain power levels, will enough be needed to make it worthwhile to manufacture them. Although this is not easy to determine, future propulsion and power capabilities that may require lightweight nuclear powerplants to meet the technical and economic needs of international cargo transportation, resource development and scientific research are described in references 24 and 25. Future marketability of large ACVs is discussed in references 18 to 20, 24 and 25; thus marketability is also discussed in the following section within the context of missions.

ACV FREIGHTER MISSIONS

There is presently a carrier gap in overseas transportation (fig. 22) (see also table IV). Bulk cargo (such as oil) can be carried by conventional ships at low speed and low cost - less than 20 knots and less than 0.1 cents per ton-mile for super tankers. Some containerized cargo can be carried at higher speed and cost - 33 knots and 1.4 cents per ton-n. mi. At the other extreme, high value cargo is carried by aircraft at speeds greater than 200 knots but at costs greater than 15 to 20 cents per ton-mile. As discussed in the preceding section, an ACV in the 4000-10 000 ton class could fill this carrier gap as an intermediate speed (100 knots), intermediate cost (perhaps even low cost - 1 to 2 cents per ton-n. mi.) freighter.

The fact that in spite of the higher price a growing percentage of transoceanic cargo is going by air suggests that an ACV freighter that fits in the transportation gap would indeed be marketable.

A foreign trade forecast (fig. 23, from ref. 28) indicates that world dry cargo tonnage is increasing by about 4.5 percent per year. Thus, by 1980 the annual world dry cargo tonnage will increase by more than 50 percent to 1.3 billion metric tons (1.4 billion tons); by 1985 it may have doubled to about 1.6 billion metric tons. By comparison, the U.S. dry cargo trade tonnage is increasing at only 2 per-

cent per year, from 270 million metric tons (300 million tons) now to only about 360 million metric tons in 1980 (ref. 37). Also, the U.S. flag fleet in 1968 carried only about 7 percent of the U.S. dry cargo tonnage (ref. 38).

The introduction of a new American-built and operated international cargo vehicle could provide important benefits to American industry and to the U.S. balance-of-payments.

The speed, low cost, and flatbed design of this ACV freighter would make it well-suited to carry the containerized and roll on/roll off portions of dry cargo trade that are now handled by ships and also to carry wholly new types and configurations of cargo (ref. 18). However, super-tankers and bulk/ore carriers will continue to transport inexpensive bulk cargos such as oil, liquified natural gas, grain and ores between present sources and markets much more cheaply than a nuclear ACV could.

Table V lists some families of products that are presently "air-eligible," that is, products having a value of at least $2.20 per kilogram ($1.00 per pound) that now move long distances by air (ref. 39). The table also lists some products that would become air-eligible if the total air cargo cost were reduced by 25 to 35 percent. The nuclear ACV freighter described in this study could carry cargo at about one-fifth the projected cost of an air freighter. Hence, all the products listed in the table V would be ACV-eligible.

The nuclear ACV can provide up to 80 percent of the time savings of jet aircraft over ships on trips between the North Atlantic and the Orient for one-fifth the cost of the aircraft. Because of this speed, several categories of "perishables," including monthly newsprint, fresh and prepared foods, cut flowers, competitive products, and short-lived chemical compounds, might be carried by ACV.

Only very high value cargo or highly perishable cargo should remain the exclusive domain of air freighters. Examples of this type of cargo are: jewelry, cosmetics, daily newsprint, and small-lot highly competitive products for initial disclosure or demonstration (such as

fashion clothing, electronic or optical instruments).

In a roll on/roll off mode (fig. 24) this ACV freighter could carry cars, tractors, road construction machinery, recreation vehicles, mobile homes, and trailer trucks, and carry them to and from new ports (ref. 18) that cannot be reached by ships. It could transport containerized cargo or large preloaded pallets of machinery or appliances fast enough to allow expensive inventories of goods to be reduced. ACV's could carry modular, prefabricated and preoutfitted building units (fig. 25). A building unit might be a factory, equipment service center, educational center, hospital, barracks, field kitchen, or temporary office.

For nearly 500 years seafaring nations of the North Atlantic have searched for a Northwest Passage between the Atlantic and Pacific Oceans. Nuclear-powered ACV freighters could open a Northwest Passage (through the Canadian Arctic Islands) or other Arctic passages across the North Polar Cap to commercial traffic in the time period 1985-2000 (ref. 20, fig. 26). As described in reference 25, a nuclear-powered ACV freighter could provide (1) a shorter trade route between most of the major industrial and population centers of the world, (2) competitive cost with conventional displacement ships for containerized and roll on/roll off cargo, (3) independence from the Panama and Suez Canals, and (4) all-season Arctic-wide mobility.

The Arctic is now being recognized as an abundant source of many raw materials, especially petroleum. Oil has been discovered at Prudhoe Bay in Alaska and at the MacKenzie River Delta and Ellesmere Island in Canada. The Canadian Arctic Islands have been estimated to overlie a greater oil deposit than the Middle East (ref. 40). Near Mary River, a town in the northern part of Baffin Island, lies the largest and richest iron ore deposit in North America (ref. 41). Natural gas, iron, nickel, lead, zinc, silver, copper, and uranium have been discovered in the Canadian Arctic. The U.S.S.R. has enormous oil, gas, and mineral reserves in Siberia.

The possibility of using ACVs configured as tankers (fig. 5) to carry oil over the polar ice from the North Slope of Alaska around Point Barrow and south to be transshipped to a displacement tanker waiting in ice-free water has been described (ref. 19). Large ACVs will not likely compete economically with oil tanker or bulk ore carriers on open sea routes from present sources. But from Arctic sources they may. ACVs, with their potential Arctic-wide, year-round mobility, could provide an economical means of moving raw materials from remote ice-bound mines and wells to ice-free ports where the cargo could be transshipped to conventional displacement tankers, bulk carriers or pipelines.

POTENTIAL IMPACT

Two particular civilian implications of ACV freighters seem sufficiently important and far-reaching to stimulate the development of large ACVs, the growth of a large ACV industry, and the demand for a nuclear ACV.

The mobility of the large ACV would not only permit new transportation routes but it would also provide a totally new geographic freedom in locating ports and laying out a port-city (ref. 18, fig. 27). By the 1980's fleets of large ACV freighters could begin to carry ocean-going cargo. The mobility of an ACV fleet would allow hoverports to be located away from present crowded areas. Such hoverports would provide new transportation nodes and thus could support new business, industrial and population centers. New cities could arise along shallow or reef-bound seacoasts and rivers just as cities once arose around deep water seaports.

The presence of vast mineral and fuel resources in the Arctic plus its potential (using ACV freighters) as a trade route between ports of the North Pacific and North Atlantic Oceans may be the prelude to settlement and development of the Arctic. The nuclear ACV would provide the heavy-duty autonomous transportation needed to develop and operate in this remote and hostile region (refs. 19 and 20).

CONCLUDING REMARKS

The technical and economic feasibility of small ACVs has already been demonstrated; and there appear to be no technical limitations to building large ACVs. The feasibility of lightweight mobile nuclear powerplants is suggested by development work on nuclear space power systems, by successful experiments involving high-speed impact of simulated reactor containment vessels without rupture, and by analytical studies of optimized shield designs to minimize weight.

Nuclear ACV freighters may have an operating cost as low as 1.0 cent per metric ton-kilometer (1.7 cent/ton-n.mi.). Their flatbed design and cost would permit them to carry relatively high value cargo (containers, vehicles, and even modular housing) on transoceanic and trans-Arctic voyages. Their mobility and trade potential could spark the development of new shallow-water or reef-bound ports and cities.

REFERENCES

1. Rom, Frank E.; and Masser, Charles C.: Nuclear-Powered Air-Cushion Vehicles for Transoceanic Commerce. NASA TM X-2293, 1971.

2. Rom, Frank E.; and Finnegan, Patrick M.: Will the Nuclear-Powered Aircraft be Safe? Astronautics & Aeronautics, vol. 6, no. 3, Mar. 1968, pp. 32-40.

3. Jordan, Thomas M.; and Wohl, Millard L.: Shield Weight Optimization Using Monte Carlo Transport Calculations. NASA TM X-52973, 1971.

4. Wohl, Millard L.; Celnik, Jack; and Schamberger, Robert D.: Optimized 4π Spherical-Shell Depleted Uranium-Water Shield Weights for 200- to 550-Megawatt Reactors. NASA TM X-2503, 1972.

5. Puthoff, R. L.: High Speed Impact Tests of a Model Nuclear Reactor Containment System. NASA TM X-67856, 1971.

6. Puthoff, Richard L.: A 1055 Ft/Sec Impact Test of a Two Foot Diameter Model Nuclear Reactor Containment System Without Fracture. NASA TM X-68103, 1972.

7. Puthoff, Richard L.; Parker, W. G.; and Van Bibber, L. E.: Post Impact Behavior of Mobile Reactor Core Containment Systems. NASA TM X-68176, 1972.

8. Puthoff, Richard L.: A 810 Ft/Sec Soil Impact Test of a 2-Foot Diameter Model Nuclear Reactor Containment System. NASA TM X-68180, 1972.

9. Rom, Frank E.; Finnegan, Patrick M.; and McDonald, Glen E.: Very-High-Burnup Vapor-Transport Fuel-Pin Concept for Long-Life Nuclear Reactors. NASA TN D-4860, 1968.

10. Rom, Frank E.: Airbreathing Nuclear Propulsion - A New Look. NASA TM X-67837, 1971.

11. Rom, F. E.: Status of the Nuclear Powered Airplane. J. Aircraft, vol. 8, no. 1, Jan. 1971, pp. 26-33.

12. Morris, Richard E.: Creep-Rupture Data for Welded N-155 Tubes. NASA TN D-5195, 1969.

13. Morris, Richard E.: Permanent Impact Deformation of Spherical Shells. NASA TM X-2067, 1970.

14. Morris, Richard E.: Empirical Correlation of Small Hollow Sphere Impact Failure Data Using Dimensional Analysis. NASA TM X-52874, 1970.

15. Rom, Frank E.; Kascak, Albert F.: The Potential of Nuclear Power for High-Speed Ocean-Going Air-Cushion Vehicles. NASA TM X-1871, 1969.

16. Kascak, Albert F.: Parametric Study of Large Nuclear Surface Effect Machines. NASA TM X-1888, 1969.

17. Anderson, J. L.: A Nuclear Powered Air Cushion Freighter for the 1980's. NASA TM X-67876, 1971.

18. Anderson, J. L.; and Finnegan, P. M.: Creating New Cities Through the Large Air-Cushion Vehicle. Astronautics & Aeronautics, vol. 10, no. 1, Jan. 1972, pp. 46-54.

19. Anderson, John L.: Air Cushion Tankers for Alaskan North Slope Oil. NASA TM X-2683, 1973.

20. Anderson, John L.: Northwest Passage - Trade Route for Large Air-Cushion Vehicles. NASA TM X-2684, 1973.

21. Anon.: The Surface Effect Ship in the American Merchant Marine. Parts I-V, Booz-Allen Applied Research, Inc., Nov. 1963 to July 1965.

22. Fielding, Peter G.: Twentieth Century Yankee Clippers. Hovering Craft and Hydrofoil, vol. 5, Nov. 1965, pp. 6-17.

23. Westmoreland, J. C.; Dee, J. B.; and Loos, J. E.: A Conceptual Nuclear Propulsion System for Ground Effect Machines. Aerospace Eng., vol. 20, no. 7, July 1961, pp. 16-17, 59-64.

24. Anderson, John L.: Nuclear Powerplants for Mobile Applications. NASA TM X-68154, 1972.

25. Anderson, John L.: Emerging Needs for Mobile Nuclear Powerplants. NASA TM X-68164, 1972.

26. Wheeler, R. L.: The Development Phase of the Mountbatten Class (SR N4) Hovercraft. Paper 69-410, AIAA, May 1969.

27. Bertin, J.: French Marine Air Cushion Vehicles. Aeronaut. J., vol. 74, no. 717, Sept. 1970, pp. 726-735.

28. Anon.: Marine Nuclear Steam Propulsion Executive Briefing. U.S. Maritime Administration, Washington, D.C., Dec. 7, 1971.

29. Anon.: Persistence Rewarded. Nucl. Eng. Int., vol. 16, no. 185, Oct. 1971, pp. 874-875.

30. Krasner, Morton H.; Davison, Harry W.; and Diaguila, Anthony J.: Conceptual Design of a Compact Fast Reactor for Space Power. NASA TM X-67859, 1971.

31. English, R. E.: Technology for Nuclear Dynamic Space Power Systems. NASA TM X-52771, 1970.

32. English, R. E.: Technology of Nuclear-Brayton Space Power Systems. NASA TM X-67957, 1971.

33. Anon.: Trends in the Cost of Light Water Reactor Power Plants for Utilities. USAEC Rep. WASH-1150, May 1970.

34. Anon.: Competitive Nuclear Merchant Ships. U.S. Maritime Administration, Office of Research and Development, Dec. 20, 1971.

35. Anon.: Report on the Nuclear Ship Study. Dept. of Trade and Industry, Her Majesty's Stationery Office, London, 1971.

36. Rippon, Simon: 280 Nuclear Containershps on the High Seas by 2000. Nucl. Eng. J., June 1971, p. 443.

37. Ruhe, W. J.: Potentials of Nuclear Power at Sea. Nucl. News, vol. 12, no. 8, Aug. 1969, pp. 33-38.

38. Anon.: Essential United States Foreign Trade Routes. U.S. Dept. Commerce, Maritime Adm., Dec. 1969, p. 75.

39. Smick, A. Edward: Cargo Handling: Needed - A Marketing Systems Approach. Astronautics & Aeronautics, vol. 8, no. 1, Jan. 1970, pp. 68-74.

40. Boyle, Richard J.: Arctic Passages of North America. U.S. Naval Inst. Proc., vol. 95, no. 1, Jan. 1969, pp. 48-55.

41. Smith, William D.: Northwest Passage. American Heritage Press, 1970.

42. Zivi, S. M.: A Passive Safety Device Against a Melt-Through Accident. Nuclear Appl., vol. 5, Aug. 1968, pp. 53-54.

TABLE I. - CONCEPTUAL AIR CUSHION VEHICLES

Description	Transoceanic freighter (ref. 14)	Artic freighter (ref. 17)	Oil tanker (ref. 16)
Fuel	Nuclear	Nuclear	Chemical
Gross weight, metric tons	4535	9070	9070
Payload fraction	0.55	0.60	0.60[a]
Speed, knots	100	100	60
Length, m (ft)	137 (450)	87.4 (290)	83.9 (275)
Breadth, m (ft)	76 (250)	61.0 (200)	56.4 (185)
Daylight clearance (cm)	30.5	7.6	7.6
Base pressure, N/m^2 (lb/ft^2)	4800 (100)	19 200 (400)	19 200 (400)
Specific fuel consumption lb/hp/hr	0.4	0.35	0.35
Thermal efficiency	0.20	0.25	0.25
Thrust per shaft horsepower, lb/shp	1.6[b,d]	1.6[b]	2.8[c]
Installed horespower, hp	344 000	763 000	300 000
Reactor thermal power, MW	1280	2277	----------
Specific power, hp/ton	70	76	30[d]
Lift/drag	20	16[d]	24

[a]1500 n. mile round trip; 100% payload one way; no payload back.
[b]Ratio appropriate to prop-fan at 100 knots.
[c]Ratio appropriate to air propeller at 60 knots
[d]These parameters were the starting points for determing the power requirements in their respective designs.

TABLE II. - RANGE OF OPERATING CONDITIONS FOR GAS-COOLED THERMAL REACTOR-STEAM TURBINE SYSTEM

Steam turbine inlet temperature	315° to 600° C (600°-1100° F)
Steam turbine inlet pressure . . .	6.9 to 13.8×10^{6} N/m^{2} (1000-2000 lb/in.^{2})
Steam condenser pressure	6.9 to 69×10^{4} N/m^{2} (10-100 lb/in.^{2})
Steam condenser temperature	95° to 150° C (200°-300° F)
Reactor coolant outlet temperature	480° to 760° C (900°-1400° F)
Fuel element clad temperature	650° to 980° C (1200°-1800° F)
Reactor core average power density	70 to 280 W/cm^{3} (2-8 MW/ft^{3})

TABLE III. - LONG-LIFE FUEL PIN TESTS

(PLUMBROOK REACTOR FACILITY)

	Required for 10,000-hour propulsion reactor	Commercial power reactor	UO_2-TZM test	UN-TZM test
Fuel pin surface temperature, ^{o}F	1800	600	2100	2100
Fuel pin power[a] kW/cm^3	0.5	0.5	2.3	1.7
Total energy release $kW\text{-}hr/cm^3$ of pin	8300[b]	6050[b]	8300[c]	4900[d]
Burnup,[e] percent	21	3	21	7

[a]The volume in the kW/cm^3 is the total volume of the pin, i.e., the sum of the center void, the fuel, and the clad volume.

[b]End-of-core life.

[c]Blower-motor failure.

[d]Fuel pin rupture; failure believed to be understood and correctable.

[e]Burnup given is the percentage of heavy metal; burnup percentage of uranium-235 would be greater for commercial reactors than the others because of the low enrichment fuel used.

TABLE IV. - OCEAN-GOING VEHICLE HAULING COSTS

Vehicle	Gross weight, ton	Range, n. mi	Speed, knots	Cost (cents/ton-n. mi) DOC[a]	TOC[b]	Load factor	Reference
Nuclear ACV	10 000	----	100	1.3	1.7	1.0	17
Nuclear ACV	10 000	----	100	1.5	-----	.6	1
Nuclear ACV	4 000	----	100	1.8	-----	.6	1
Nuclear SES	4 000	----	85	2.5	-----	1.0	(c)
Chemical ACV	10 000	1500	60	---	1.2	.75	16
Chemical ACV	10 000	2000	100	2.5	-----	.6	1
Chemical ACV	10 000	4000	100	4.4	-----	.6	1
Chemical SES	4 000	2000	85	1.6	-----	1.0	(c)
Chemical SES	4 000	4000	85	3.3	-----	1.0	(c)
Containership (oil fired or nuclear)	(d, e)	----	33	---	1.4	1.0	17
Aircraft	(f)	3500	450	3.5	9.4	.85	17
Super tanker (oil-fired)	(g)	----	16	---	.034	1.0	17

[a]DOC = Direct operating cost.

[b]TOC = Total operating cost.

[c]James L. Decker: Economic Comparison of Large Aircraft and Surface Effect Ships for Ocean Commerce. ISESPO. Jan. 1968.

[d, e, f, g]Payload tonnage: 20 000 (oil-fired); 30 000 (nuclear); 120; 200 000.

TABLE V. - CARGO CATEGORIES

(FROM SMICK, REF. 39)

	Product value per pound	
	$0.65 - $1.00	>$1.00 (Air eligible - substantial percentages now move long distances by air)
Product families	Refrigerators	Electronic data processing machinery
	Automobiles	Finished apparel
	Air conditioners	Optical equipment
	Stoves	Hi-fi equipment
	Clothes washers	Transistor radios
	Dishwashers	

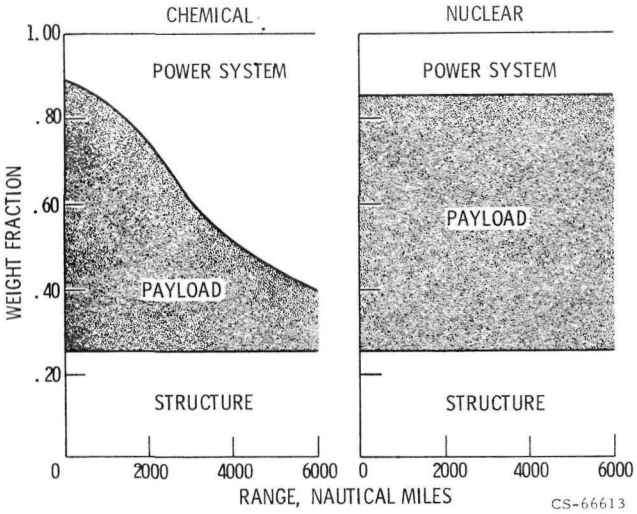

Figure 1. - Payload for 10 000 ton ACV.

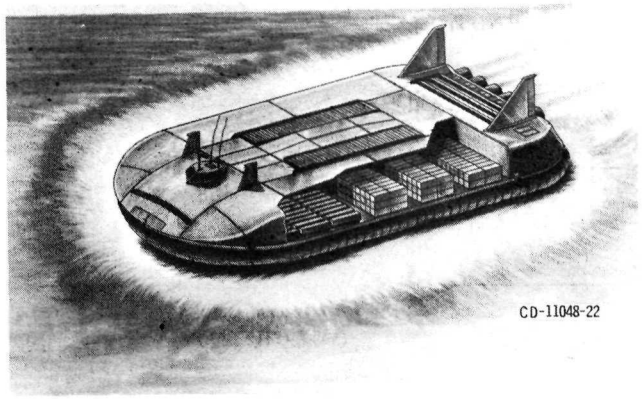

Figure 2. - 4500 Metric ton nuclear ACV freighter.

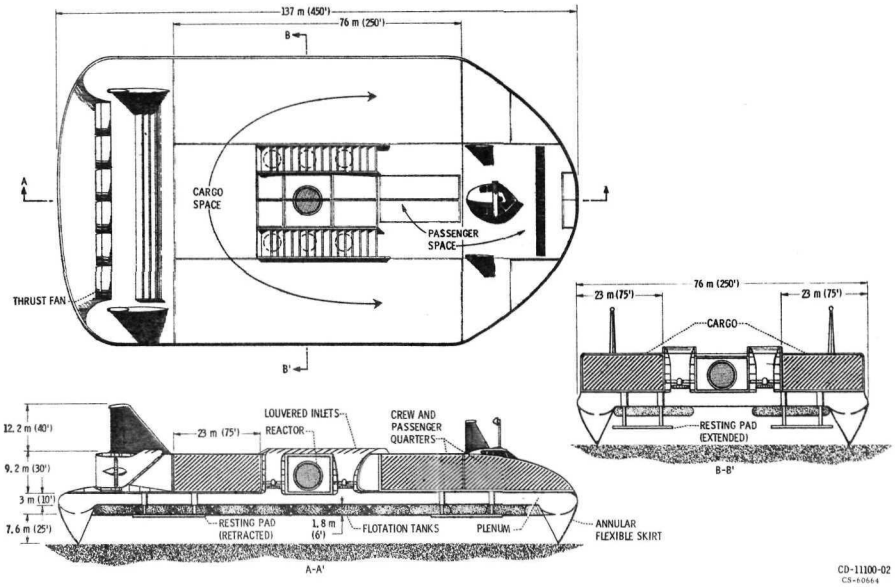

Figure 3. - Schematic drawings of 4500 metric ton ACV freighter.

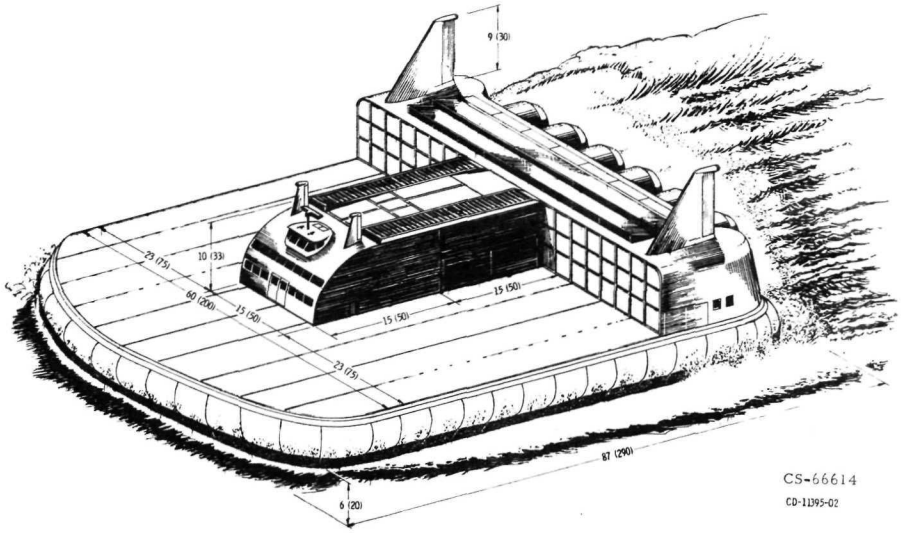

Figure 4. - 9070-Metric-ton (10 000-ton) nuclear air-cushion-vehicle-freighter flat-bed design. Dimensions are in meters (ft.)

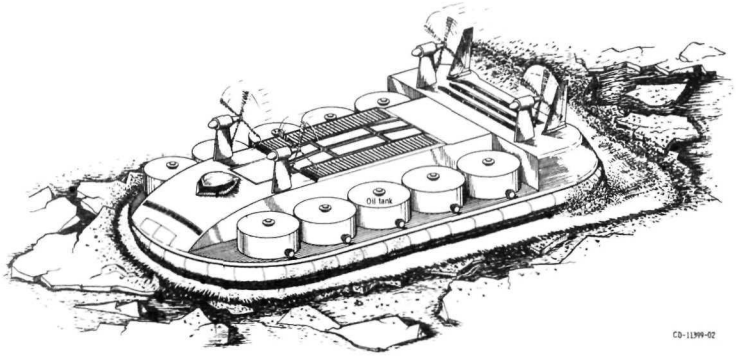

Figure 5. - 10 000-Ton air-cushion tanker.

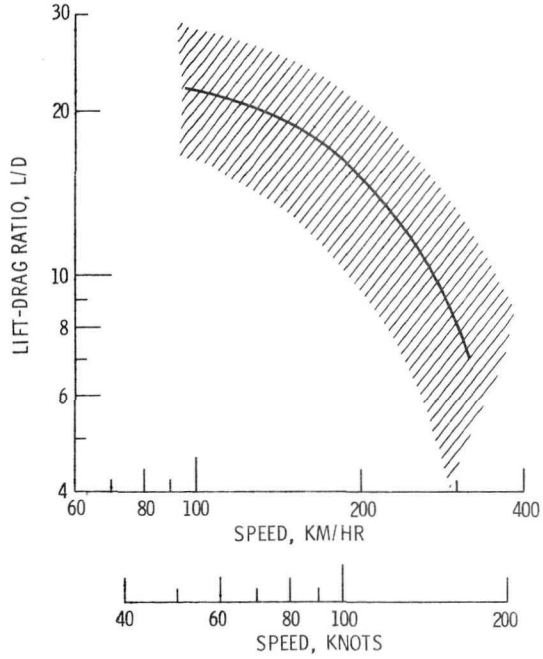

Figure 6. - Lift-drag ratios for air-cushion vehicles.

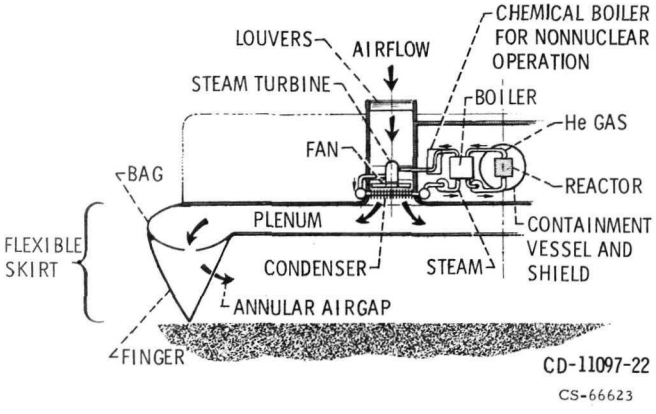

Figure 7. - Schematic drawing of steam turbine drive for lift fan.

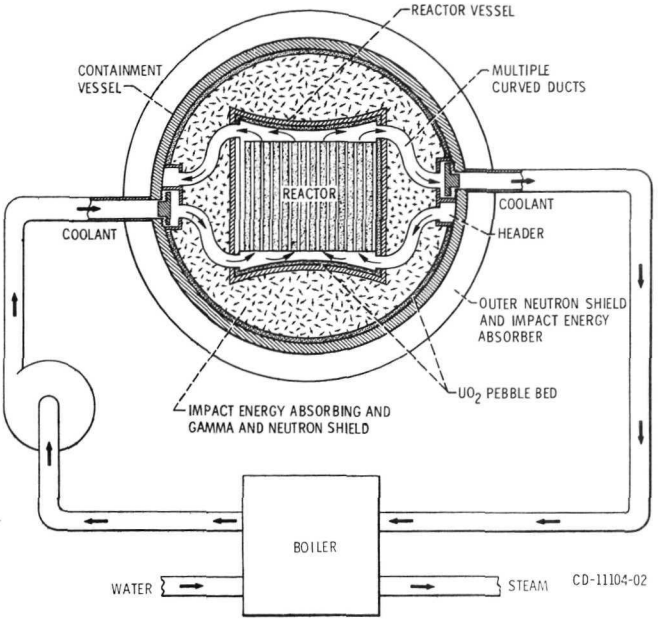

Figure 8. - Lightweight, compact mobile nuclear reactor concept.

E-7412

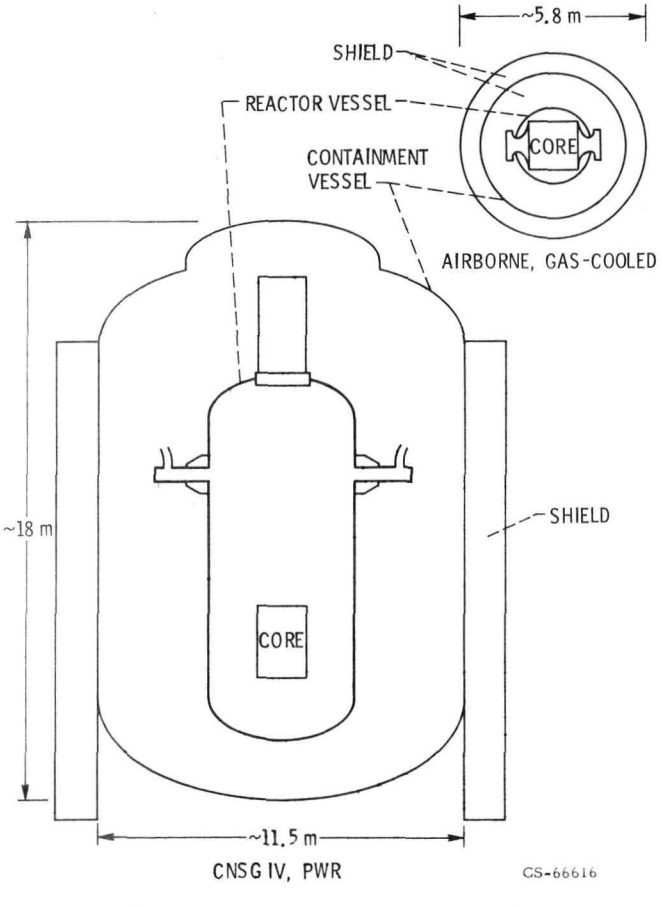

Figure 9. - Comparison of mobile reactor concepts at ~300 MWt.

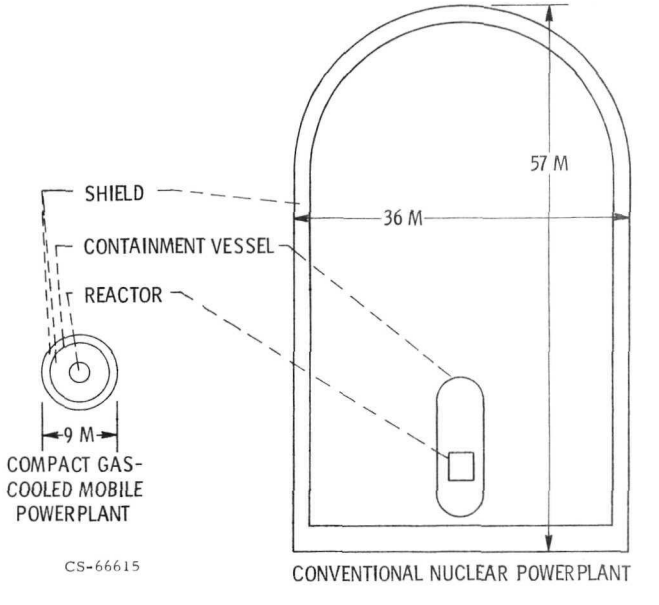

Figure 10. - Contrast of reactor sizes at 1000 MWt (shielded for 0.25 MR/hr at the outer shield surface.

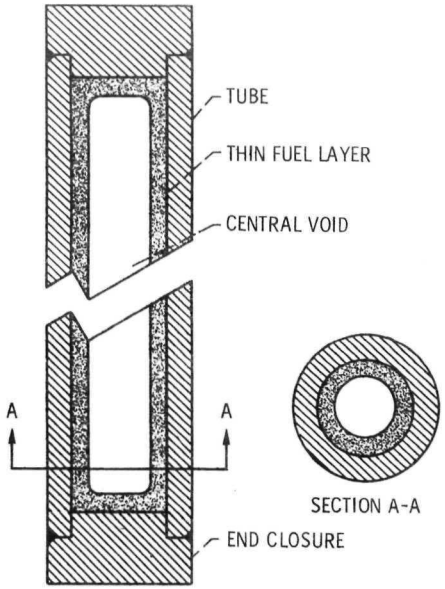

Figure 11. - Schematic drawing of very-high-burnup vapor-transport fuel-pin concept.

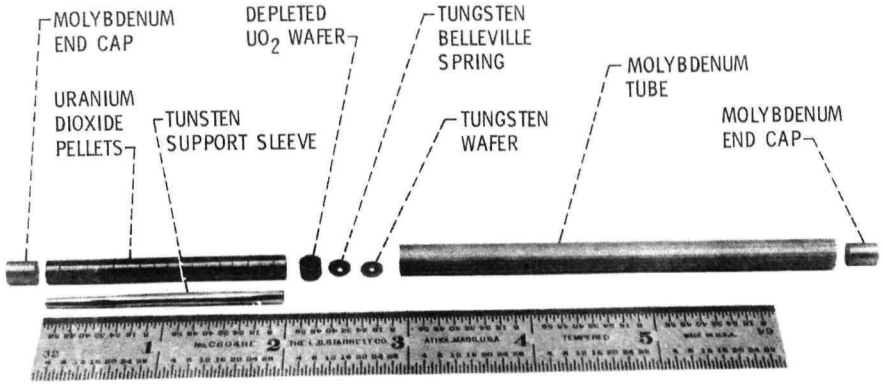

Figure 12. - Components for high temperature fuel pins containing UO_2 pellets. The tungsten support sleeves were used with cored pellets.

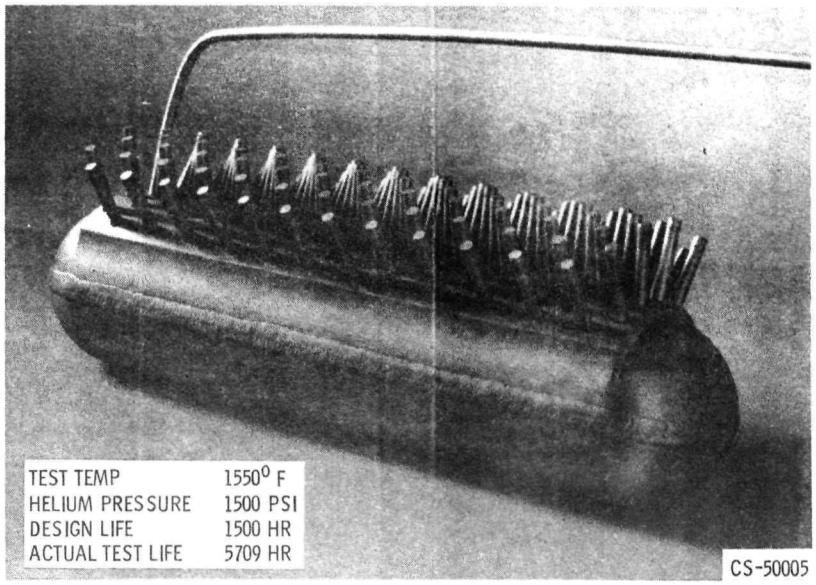

Figure 13. - Test of high pressure helium-to-air heat exchanger header.

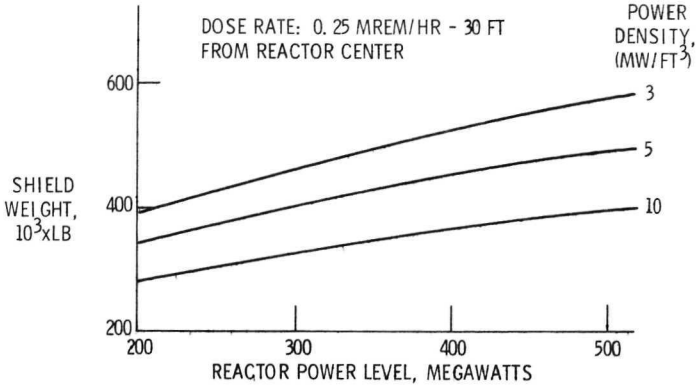

Figure 14. - Depleted uranium-water shield weights.

F-7442

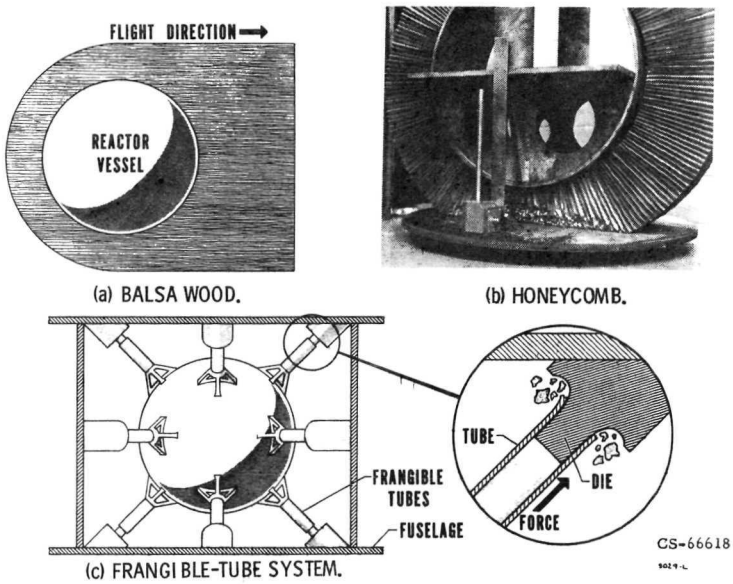

Figure 15. - Passive impact-energy absorbers.

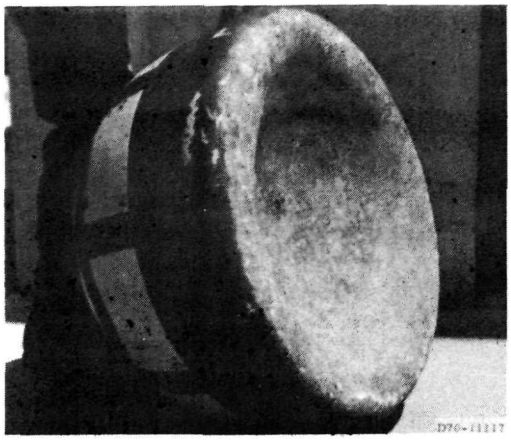

(a) 380 ft/sec.

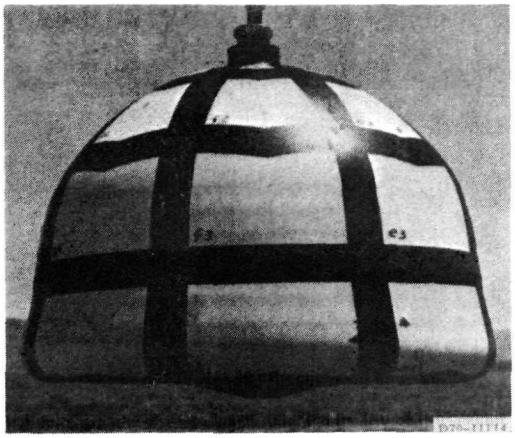

(b) 412 ft/sec.

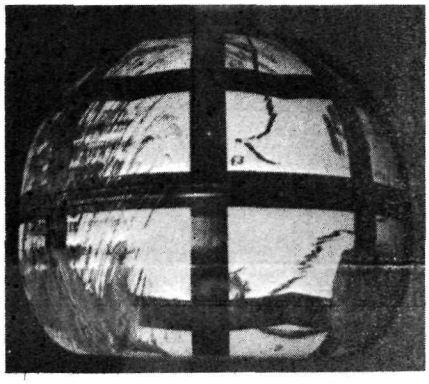

(c) 240 ft/sec.

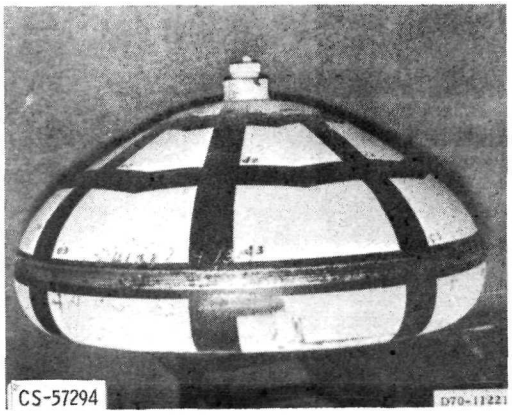

(d) 480 ft/sec.

(e) 580 ft/sec.

Figure 16. - Containment system models after impact at indicated velocities. No leaks were detected in any of the models.

E-7442

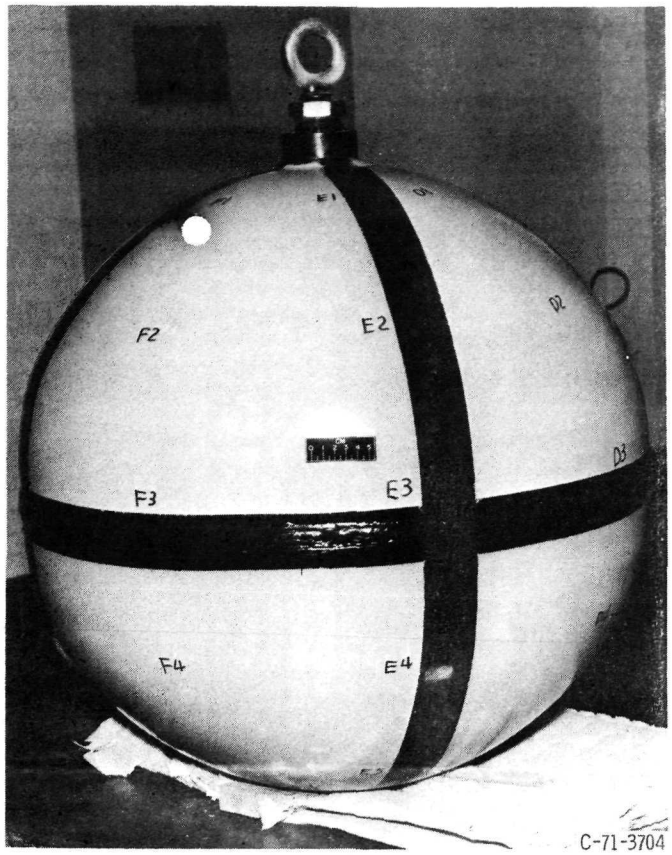

Figure 17(a). - Nuclear containment system - before impact.

Figure 17(b). - Nuclear containment system - after impact at 1055 ft/sec.

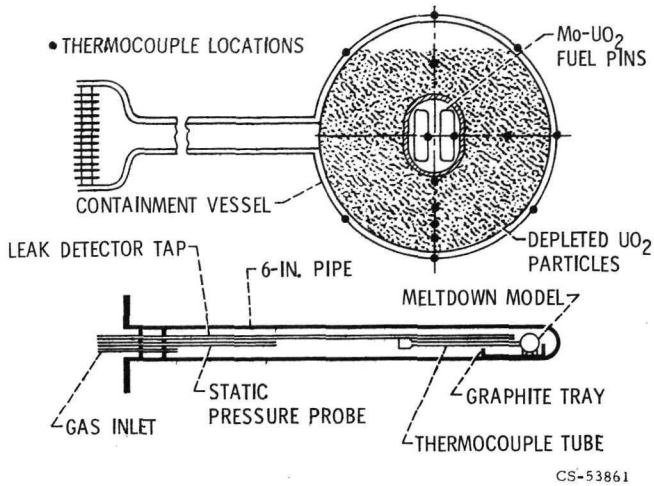

Figure 18. - Reactor meltdown containment experiment.

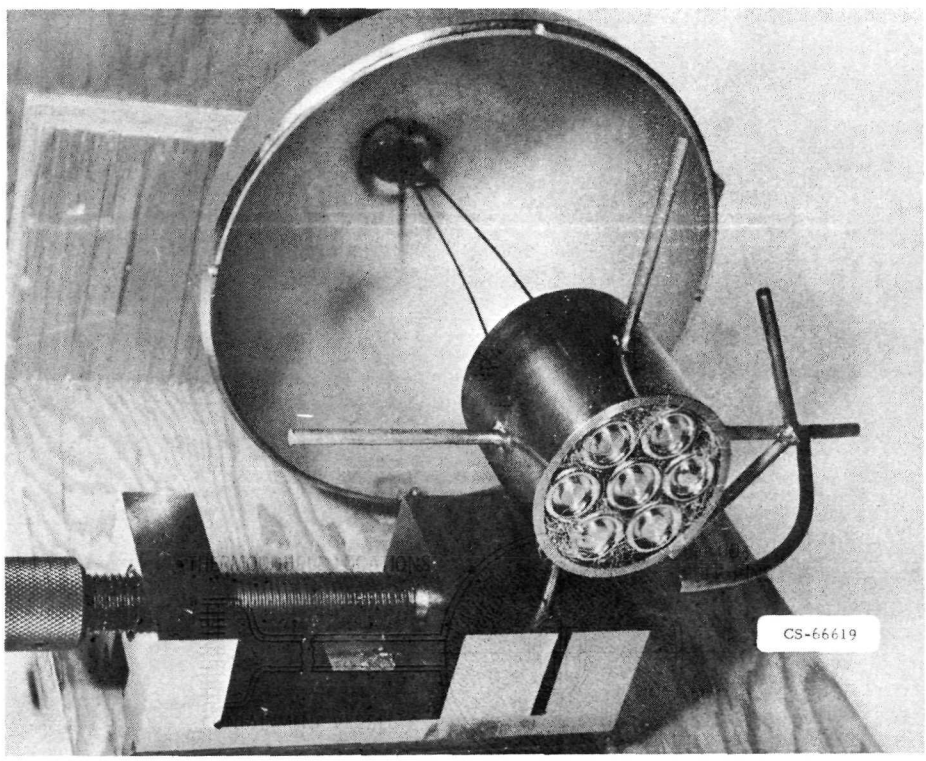

Figure 19. - Reactor meltdown containment apparatus.

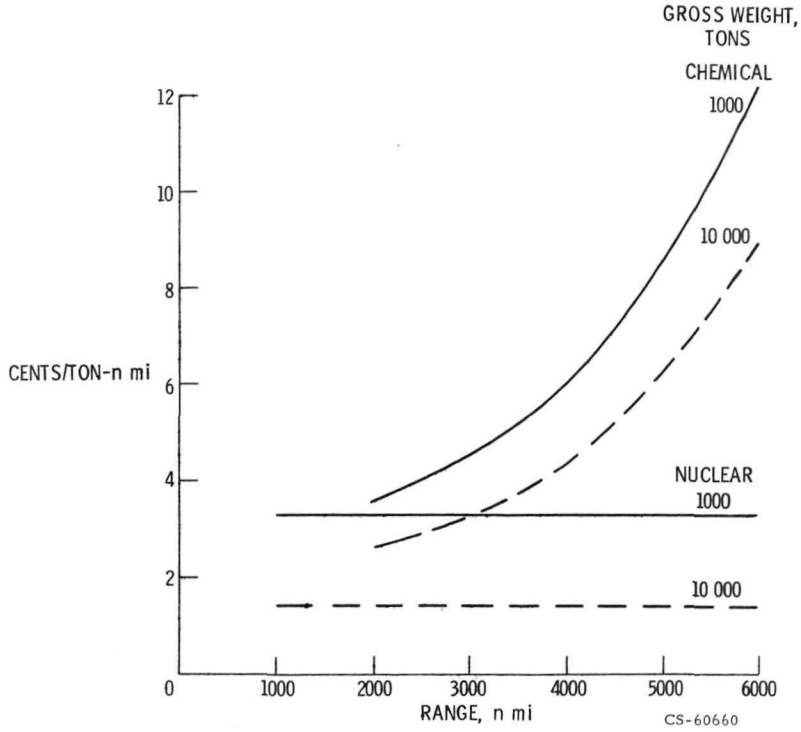

Figure 21. - Operating costs for nuclear and chemical ACVS.

E-7442

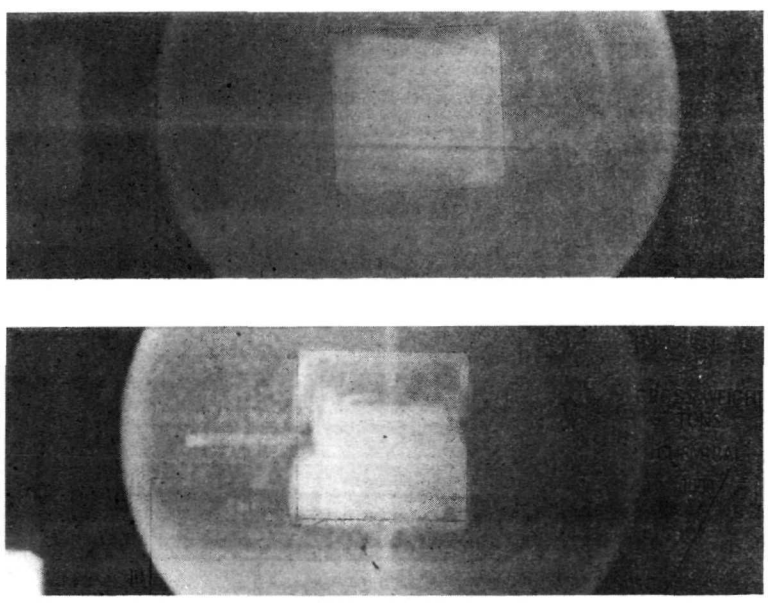

CS-66620

Figure 20. - Neutron radiograph of meltdown containment apparatus after experiment.

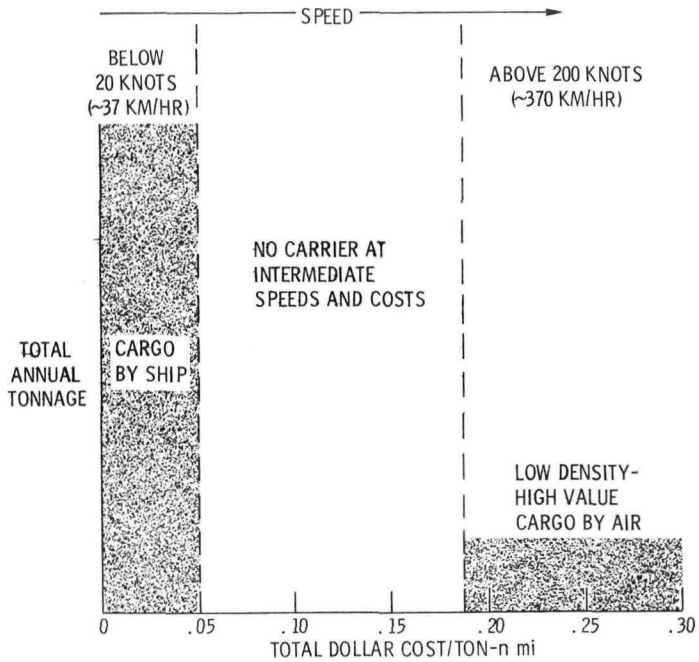

Figure 22. - Carrier gap in overseas transportation.

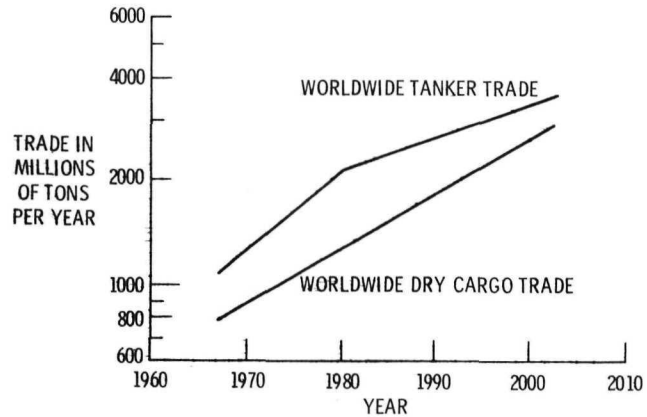

Figure 23. - Worldwide trade forecast (from ref. 28).

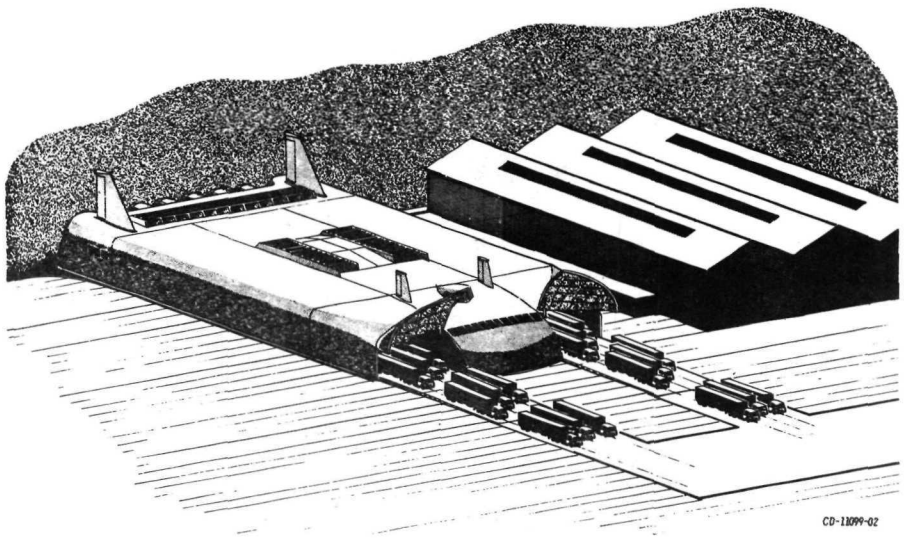

Figure 24. - ACV freighter in roll off cargo transfer mode.

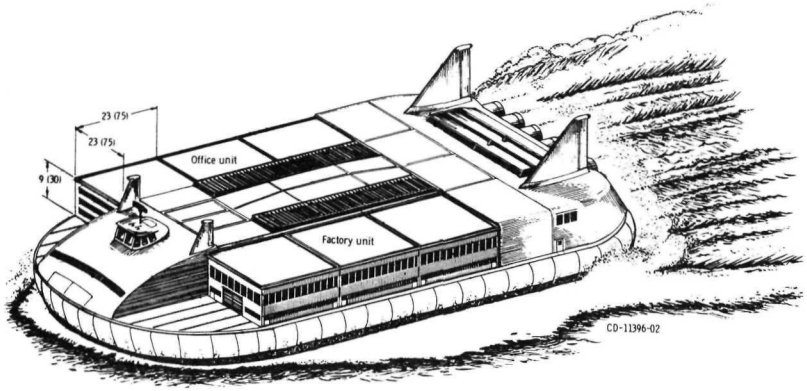

Figure 25. - Air-cushion-vehicle freighter in "mobile building" mode. Dimensions are in meters (ft).

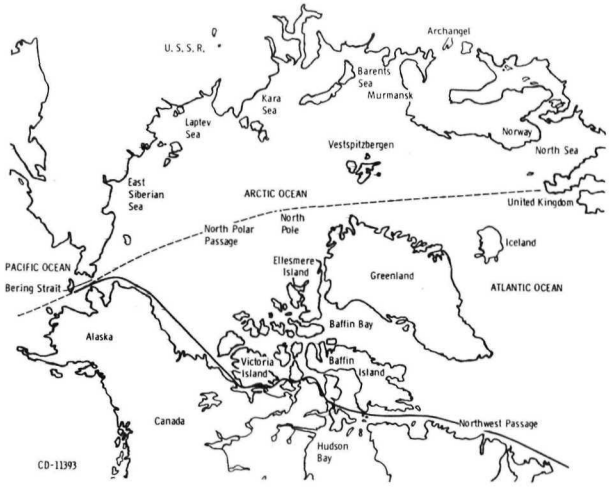

Figure 26. - Air-cushion-vehicle Arctic routes.

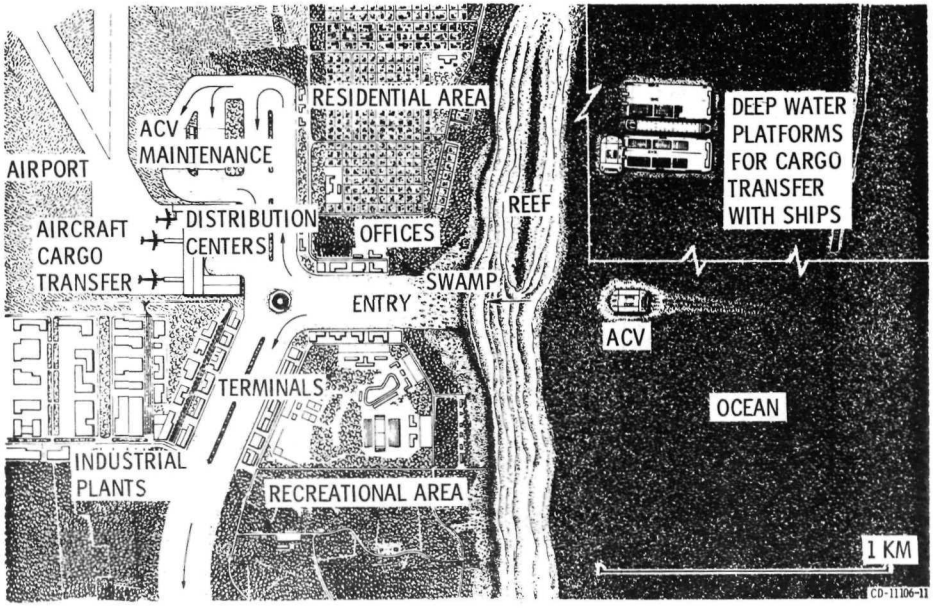

Figure 27. - City-port for nuclear ACV freighters.

NASA-Lewis-Com'l