N73 24485

LARS Information Note 022673

CASE FILE
COPY

A Linear Shift-Invariant Image Preprocessing Technique for Multispectral Scanner Systems

by
C. D. McGillem and
T. E. Riemer

The Laboratory for Applications of Remote Sensing

Purdue University, West Lafayette, Indiana

1973

LARS Information Note 022673

A Linear Shift-Invariant Image Preprocessing Technique for Multispectral Scanner Systems

C. D. McGillem
T. E. Riemer

February 1973

The work described in this report was sponsored by the National Aeronautics and Space Administration (NASA) under Grant Number NGL-15-005-112.

Table of Contents

Abstract		iii
I.	Introduction	1
II.	Statement of Problem	2
III.	Comparison of Proposed Technique	4
IV.	Analysis of Proposed Preprocessing Technique	8
V.	Numerical Solution Technique for Preprocessing Technique	37
VI.	Conclusions	41
VII.	References	43
Appendices		
	Appendix A	46
	Appendix B	47
	Appendix C	50
	Appendix D	53

ABSTRACT

A linear shift-invariant image preprocessing technique is examined which requires no specific knowledge of any parameter of the original image and which is sufficiently general to allow the effective radius of the composite imaging system to be arbitrarily shaped and reduced, subject primarily to the noise power constraint. In addition, the size of the point-spread function of the preprocessing filter can be arbitrarily controlled, thus minimizing truncation errors.

I. INTRODUCTION

The general problem of image processing has received much attention within the last decade. The intense interest in this area arises from the need for the highest possible image quality in the increasing application of the many forms of imagery, from X-rays in medicine to data collected from satellite-based multispectral optical line scanners for monitoring earth resources, to the solution of various related problems in many fields of science and engineering, made feasible by recent improvements in digital computer hardware. The general area of image processing may be divided into three major categories: image preprocessing, efficient image coding, and pattern recognition. There are several comprehensive tutorial surveys which cite the significant techniques for handling problems in each of these categories and which contain extensive references. (1, 12, 23)

Since no image collecting or imaging system will produce a perfect replica of the original image, some further processing is usually required. Image preprocessing deals primarily with the problem of processing the output of an imaging system in such a way that the significant parameters or features of the original image are, in some sense, enhanced or restored. This processing may be linear or nonlinear, shift-variant or invariant depending upon the type of degradation produced by the imaging system.

II. STATEMENT OF PROBLEM

The purpose of this research is the development of a technique to reduce the effective aperture radius of multispectral optical line scanners used for remote sensing of earth resources. The data gathered from such systems is used principally for the classification of individual resolution elements by pattern recognition techniques. The accuracy of such classification techniques is usually based upon the supposition that each resolution element of the imaging system output exactly represents a sample of a correspondingly located element of the original image. Because of the finite aperture size of the scanner, which is not only a function of the optics of the scanner but also the impulse response of any analog signal conditioning or recording equipment, [14] a two-dimensional spatial smearing or blurring of the original image is produced. This type of imaging degradation essentially maps many points from the original image into a single resolution element. In other words, a single resolution element of the imaging system output represents a two-dimensional weighted sum of many points adjacent to the correspondingly located sample of the original image. Thus, depending upon the density and shape of the aperture and the spatial and multispectral characteristics of the original image, serious classification errors may result. This smearing has been observed to seriously affect classification accuracy within several aperature diameters of the boundaries of data classes. In addition, the classification accuracy of any topographical feature of approximately two aperture diameters or less; for example, roads, streams, and buildings at an altitude of 1.5 kilometers or more, is substantially reduced.

It is expected that a reduction of the aperture radius will decouple the spatial correlation between adjacent resolution elements of the imaging system output, thus correcting each resolution

element so that it more accurately represents a single sample of a correspondingly located element of the original image and not a weighted sum of adjacent points. Consequently classification accuracy of both small topographical features and in the boundary areas of large data classes should be improved, as well as overall spatial resolution of the imaging system output.

An analysis of the multispectral optical line scanner system[14] indicates that the imaging system degradation could be assumed to be linear shift-invariant.[20, 23] The proposed preprocessing technique is based upon this assumption. The principle advantage in making such an assumption was to reduce the cost of preprocessing.

III. COMPARISON OF PROPOSED TECHNIQUE TO EXISTING TECHNIQUES

Numerous techniques have been proposed for [2, 4, 5, 6, 9, 10, 15, 19, 22, 27] processing linear shift-invariant degraded images. The majority of these techniques require some knowledge of the original image. [23] For example, when the mean-square error of the processed image is minimized, which incidently is not a very effective performance criterion, [23] the resulting filter requires a knowledge of the power spectral density of the original image. [3, 11, 13, 18, 23] When precise knowledge of the required parameter of the input signal is not known, the resulting error produced by the processor may often negate any possible image improvement. Such techniques must necessarily require that a different processing filter be used for each specific image class comprising images having similar "a priori" statistics.

In view of the potentially large number of image classes comprising the data processed at LARS, the cost of such a preprocessing technique requiring a separate "matched" filter for each specific image class would be prohibitive. The technique examined in this research does not require specific information about the original image. Thus a single processing filter for all image classes would be required. However, it should be noted that the resulting processing filter is suboptimal in the sense that "a priori" statistics of the original image are ignored.

The fundamental objectives of this technique are similar to those examined by Smith [24] and Stuller. [25] The diagram of the basic image preprocessing system is shown in Figure 1. The problem is to determine the optimal preprocessing filter point-spread function, $h_r(\bar{v})$, which will make the composite imaging system point-spread function $g(\bar{v})$, arbitrarily close to an impulse function, subject to a constraint on the mean-square noise component in the processed image, $n_T(\bar{v})$.

Stated more precisely, the problem is to choose the $h_r(\bar{v})$ that will minimize the functional

$$\int_{-\infty}^{\infty} \omega(\bar{v}) \quad g^2(\bar{v})d\bar{v} \qquad \text{where } \bar{v} \text{ is a two-dimensional vector}$$

and

$$g(\bar{v}) = h_b(\bar{v}) * h_r(\bar{v})$$

subject to the constraints

$$K_1 = E\left\{n^2(\bar{v})\right\}$$

$$K_2 = \int_{-\infty}^{\infty} g^2(\bar{v})d\bar{v}.$$

The function $\omega(\bar{v})$ is a penalty function designed to force the composite imaging point-spread function, $g(\bar{v})$, to be arbitrarily duration limited, thus approximating the desired impulse function. The more rapidly $\omega(\bar{v})$ increases with increasing $\bar{v}$, the more rapidly $g(\bar{v})$ will decrease with increasing $\bar{v}$. Both Smith and Stuller chose $\omega(\bar{v}) = \bar{v}^2$, because of resulting mathematical conveniences; although a more general formulation allowing for a higher order penalty function would be desirable. It would provide the filter designer with an additional parameter for controlling the degree of resolution improvement.

In practice it is also desirable to have $h_r(\bar{v})$ duration limited. Ultimately any preprocessing will be performed digitally; and since only a finite record length of $h_r(\bar{v})$ may be used, serious truncation errors may result.[12, 21] The technique proposed by Smith did not provide a means for arbitrarily controlling the duration of $h_r(\bar{v})$. The lack of such a constraint also leads to a difficulty in obtaining $h_r(\bar{v})$ from the solution of a differential equation. The technique proposed by Stuller provided for an

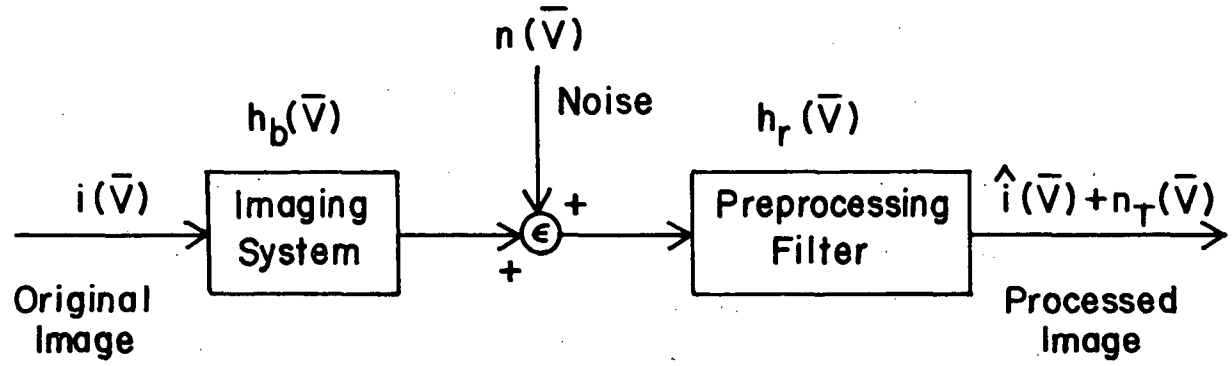

Figure 1 Block Diagram of Imaging and Preprocessing Systems

arbitrary control on the duration of $h_r(\bar{v})$ by allowing the solution for $h_r(\bar{v})$ to contain only a specified number of data points.

The technique proposed in this research adds an additional constraint to the previous two constraints

$$K_3 = \int_{-\infty}^{\infty} s(\bar{v}) h_r^2(\bar{v}) d\bar{v}$$

where $s(\bar{v})$ is an arbitrary penalty function designed to duration limit the preprocessing filter point-spread function, $h_r(\bar{v})$. The addition of this constraint provides a control on the rate of decay as well as the duration of $h_r(\bar{v})$. In addition the proposed technique allows for an arbitrary $\omega(\bar{v})$ and obtains a solution for $h_r(\bar{v})$ by using a different approach from that of Smith or Stuller, which may be easily adapted to additional constraints.

IV. ANALYSIS OF PROPOSED PREPROCESSING TECHNIQUE

The block diagram of the basic preprocessing system is shown in Figure 1. The fundamental design objective is to choose $h(\bar{v})$ so that the functional

$$F = \int_{-\infty}^{\infty} \omega(\bar{v}) g^2(\bar{v}) d\bar{v} \tag{1}$$

is minimized, where the "bar" over a variable indicates that the variable is a two-dimensional spatial vector and where

$$g(\bar{v}) = \int_{-\infty}^{\infty} h_r(\bar{z}) h_b(\bar{v} - \bar{z}) d\bar{z} = h_r(\bar{v}) * h_b(\bar{v}) \tag{2}$$

where "*" denotes a convolution, subject to the constraints

$$K_1 = \int_{-\infty}^{\infty} g^2(\bar{v}) d\bar{v} \tag{3}$$

$$K_2 = \int_{-\infty}^{\infty} s(\bar{v}) h_r^{\,2}(\bar{v}) d\bar{v} \tag{4}$$

$$K_3 = E\left\{n_T^{\,2}(\bar{v})\right\}. \tag{5}$$

As stated previously, $\omega(\bar{v})$ is an arbitrary penalty function designed to influence the solution for $h_r(\bar{v})$ so that $g(\bar{v})$ is duration limited. The more rapidly $\omega(\bar{v})$ increases with increasing $\bar{v}$, the more rapidly $g(\bar{v})$ will decrease with increasing $\bar{v}$. Thus by choosing $\omega(\bar{v})$, $g(\bar{v})$ can be made arbitrarily close to the desired impulse function. Similarly $s(\bar{v})$ is an arbitrary penalty function designed to duration limit $h_r(\bar{v})$. Since any preprocessing will be performed digitally, it is desirable to duration limit $h_r(\bar{v})$ so that truncation errors are minimized.

As a criterion for the degree of resolution improvement provided by a particular $h_r(\bar{v})$, the effective radius of the scanner aperture is defined as

$$R_r \triangleq \left[\frac{\int_{-\infty}^{\infty} |\bar{v}|^2 g^2(\bar{v}) d\bar{v}}{\int_{-\infty}^{\infty} g^2(\bar{v}) d\bar{v}} \right]^{\frac{1}{2}} . \tag{6}$$

Without preprocessing, the effective radius of the scanner aperture will be similarly defined as

$$R_b \triangleq \left[\frac{\int_{-\infty}^{\infty} |\bar{v}|^2 h_b^2(\bar{v}) d\bar{v}}{\int_{-\infty}^{\infty} h_b^2(\bar{v}) d\bar{v}} \right]^{\frac{1}{2}} . \tag{7}$$

Lagrange multipliers and the methods of functional analysis[7,8] will be used to solve Eq. 1 subject to the constraints of Eq. 3 to 5. Eq. 1, 3, 4, and 5 may be combined into an augmented functional, I, which must be minimized with respect to $h_r(\bar{v})$,

$$\begin{aligned} I &= \int_{-\infty}^{\infty} \omega(\bar{v}) g^2(\bar{v}) d\bar{v} + \Lambda_1 \int_{-\infty}^{\infty} g^2(\bar{v}) d\bar{v} + \Lambda_2 \int_{-\infty}^{\infty} s(\bar{v}) h_r^2(\bar{v}) d\bar{v} \\ &\quad + \Lambda_3 E\left\{ n_T^2(\bar{v}) \right\} \\ &= \int_{-\infty}^{\infty} \omega(\bar{v}) \int_{-\infty}^{\infty} h_r(\bar{z}) h_b(\bar{v} - \bar{z}) d\bar{z} \int_{-\infty}^{\infty} h_r(\bar{u}) h_b(\bar{v} - \bar{u}) d\bar{u} d\bar{v} \\ &\quad + \Lambda_1 \int_{-\infty}^{\infty} \int h_r(\bar{z}) h_b(\bar{v} - \bar{z}) d\bar{z} \int_{-\infty}^{\infty} h_r(\bar{u}) h_b(\bar{v} - \bar{u}) d\bar{u} d\bar{v} \\ &\quad + \Lambda_2 \int_{-\infty}^{\infty} \int s(\bar{u}) \delta(\bar{u} - \bar{v}) h_r(\bar{v}) h_r(\bar{u}) d\bar{u} d\bar{v} \\ &\quad + \Lambda_3 E\left\{ \int_{-\infty}^{\infty} n(\bar{v} - \bar{z}) h_r(\bar{z}) d\bar{z} \int_{-\infty}^{\infty} n(\bar{v} - \bar{u}) h_r(\bar{u}) d\bar{u} \right\} . \end{aligned} \tag{8}$$

Eq. 8 may be written in quadratic functional form as,

$$I = \int_{-\infty}^{\infty}\int a_1(\bar{u},\bar{z})h_r(\bar{z})h_r(\bar{u})d\bar{z}d\bar{u}$$
$$+\Lambda_1\int_{-\infty}^{\infty}\int a_2(\bar{u},\bar{z})h_r(\bar{z})h_r(\bar{u})d\bar{z}d\bar{u}$$
$$+\Lambda_2\int_{-\infty}^{\infty}\int a_3(\bar{u},\bar{z})h_r(\bar{z})h_r(\bar{u})d\bar{z}d\bar{u}$$
$$+\Lambda_3\int_{-\infty}^{\infty}\int a_4(\bar{u},\bar{z})h_r(\bar{z})h_r(\bar{u})d\bar{z}d\bar{u} \tag{9}$$

where $a_1(\bar{u},\bar{z})$, $a_2(\bar{u},\bar{z})$, $a_3(\bar{u},\bar{z})$ and $a_4(\bar{u},\bar{z})$ are linear operators defined as[8]

$$a_1(\bar{u},\bar{z}) = \int_{-\infty}^{\infty}\omega(\bar{v})h_b(\bar{v}-\bar{z})h_b(\bar{v}-\bar{u})d\bar{v} \tag{10}$$

$$a_2(\bar{u},\bar{z}) = \int_{-\infty}^{\infty}h_b(\bar{v}-\bar{z})h_b(\bar{v}-\bar{u})d\bar{v} \tag{11}$$

$$a_3(\bar{u},\bar{z}) = s(\bar{u})\delta(\bar{u}-\bar{z}) \tag{12}$$

$$a_4(\bar{u},\bar{z}) = E\left\{n(\bar{v}-\bar{z})n(\bar{v}-\bar{u})\right\} \tag{13}$$

$= R_{nn}(\bar{z}-\bar{u})$, for $n(\cdot)$ a stationary ergodic random process.

By taking the gradient of Eq. 9 with respect to $h_r(\cdot)$ where the adjoint linear operators of Eq. 10 to 13 are

$$a_1'(\bar{u},\bar{z}) = a_1(\bar{u},\bar{z}) \tag{14}$$

$$a_2'(\bar{u},\bar{z}) = a_2(\bar{u},\bar{z}) \tag{15}$$

$$a_3'(\bar{u},\bar{z}) = a_3(\bar{u},\bar{z}) \tag{16}$$

and

$$a_4'(\bar{u},\bar{z}) = a_4(\bar{u},\bar{z}) \tag{17}$$

and setting the gradient equal to zero, a homogeneous Fredholm integral equation of the second kind sometimes referred to as a Fredholm integral equation of the third kind, is obtained as

$$\int_{-\infty}^{\infty}\left[a_1(\bar{v},\bar{z}) + \Lambda_1 a_2(\bar{v},\bar{z}) + \Lambda_3 a_4(\bar{v},\bar{z})\right]h_r(\bar{z})d^{-}$$

$$+ \Lambda_2 s(\bar{v})h_r(\bar{v}) = 0. \tag{18}$$ ∠1

The solution of this equation coupled with the constraint equations, Eq. 3, 4, and 5, would give the required point-spread function of the preprocessing filter, $h_r(\bar{v})$. However, because of the numerical difficulties which may arise in the general solution of this type of equation and in order to more conveniently use the results of the multispectral scanner system analysis[14], the solution for $h_r(\bar{v})$ will be formulated in the two-dimensional spatial frequency domain.

Eq. 9 may be rewritten using inner product notation[8] as

$$I = (a_1 h_r, h_r) + \Lambda_1(a_2 h_r, h_r) + \Lambda_2(a_3 h_r, h_r)$$

$$+ \Lambda_3(a_4 h_r, h_r). \tag{19}$$

∠1 See Appendix A for derivation.

Eq. 19 may also be written as a quadratic functional in the spatial frequency domain as

$$I = (B_1 H_r, H_r) + \Lambda_1 (B_2 H_r, H_r) + \Lambda_2 (B_3 H_r, H_r) + \Lambda_3 (B_4 H_r, H_r) \tag{20}$$

where $H_r(\cdot) = \mathcal{F}\left\{h_r(\cdot)\right\}$ and

$\mathcal{F}\left\{\cdot\right\}$ denotes the Fourier transform

and B_1, B_2, B_3, and B_4 are the spatial frequency linear operators which are the Fourier transforms of the spatial domain linear operators a_1, a_2, a_3, and a_4. Thus

$$B_1(\bar{f},\bar{\nu}) = \int_{-\infty}^{\infty}\int a_1(\bar{u},\bar{z}) e^{-j2\pi\bar{f}\bar{u}} e^{j2\pi\bar{\nu}\bar{z}} d\bar{u}d\bar{z} \tag{21a}$$

which after substituting Eq. 10 into Eq. 21a may be simplified to

$$B_1(\bar{f},\bar{\nu}) = H_b^*(\bar{f}) H_b(\bar{\nu}) W(\bar{f} - \bar{\nu}) \tag{21b}$$

where $H_b(\cdot) = \mathcal{F}\left\{h_b(\cdot)\right\}$

$W(\cdot) = \mathcal{F}\left\{\omega(\cdot)\right\}$

and $H_b^*(\cdot)$ is the complex conjugate of $H_b(\cdot)$.

The adjoint of $B_1(\bar{f},\bar{\nu})$, defined as $B_1'(\bar{f},\bar{\nu})$, may be written as

$$B_1'(\bar{f},\bar{\nu}) = B_1^*(\bar{\nu},\bar{f}) \tag{22a}$$

which from Eq. 21b becomes

$$B_1'(\bar{f},\bar{\nu}) = H_b(\bar{\nu})H_b^*(\bar{f})W^*(\bar{\nu} - \bar{f}). \tag{22b}$$

Similarly,

$$B_2(\bar{f},\bar{\nu}) = H_b^*(\bar{f})H_b(\bar{\nu})\delta(\bar{f} - \bar{\nu}) \tag{23}$$

$$B_2'(\bar{f},\bar{\nu}) = H_b(\bar{\nu})H_b^*(\bar{f})\delta(\bar{\nu} - \bar{f}) \tag{24}$$

$$B_3(\bar{f},\bar{\nu}) = S(\bar{f} - \bar{\nu}) \tag{25}$$

where $$S(\cdot) = \mathcal{F}\left\{s(\cdot)\right\},$$

$$B_3'(\bar{f},\bar{\nu}) = S^*(\bar{\nu} - \bar{f}) \tag{26}$$

$$B_4(\bar{f},\bar{\nu}) = \Phi_{nn}^*(\bar{\nu})\ \delta(\bar{f} - \bar{\nu}) \tag{27}$$

where $$\Phi_{nn}(\cdot) = \mathcal{F}\left\{R_{nn}(\cdot)\right\}$$

and $$B_4'(\bar{f},\bar{\nu}) = \Phi_{nn}(\bar{f})\delta(\bar{\nu} - \bar{f}). \tag{28}$$ [2]

The gradient of the quadratic functional of Eq. 20 becomes

$$\nabla I = (B_1 + B_1')H_r + \Lambda_1(B_2 + B_2')H_r$$

$$+ \Lambda_2(B_3 + B_3')H_r + \Lambda_3(B_4 + B_4')H_r \tag{29a}$$

which, upon expanding the linear operator notation of Eq. 29a becomes

---

[2] See Appendix B for a complete derivation of these spatial frequency linear operators.

$$\nabla I = \int_{-\infty}^{\infty} \Big[B_1(\bar{f},\bar{\nu}) + B_1'(\bar{f},\bar{\nu}) + \Lambda_1\Big\{B_2(\bar{f},\bar{\nu})$$

$$+ B_2'(\bar{f},\bar{\nu})\Big\} + \Lambda_2\Big\{B_3(\bar{f},\bar{\nu}) + B_3'(\bar{f},\bar{\nu})\Big\}$$

$$+ \Lambda_3\Big\{B_4(\bar{f},\bar{\nu}) + B_4'(\bar{f},\bar{\nu})\Big\} \Big] H_r(\bar{\nu})d\bar{\nu} = 0 . \qquad (29b)$$

Substituting Eq. 21b, 22b, 23, 24, 25, 26, 27, and 28 into Eq. 29b,

$$\nabla I = \int_{-\infty}^{\infty} \Big[H_b^*(\bar{f})H_b(\bar{\nu}) \Big\{W(\bar{f} - \bar{\nu}) + W^*(\bar{\nu} - \bar{f})\Big\}$$

$$+ \Lambda_2 \Big\{S(\bar{f} - \bar{\nu}) + S^*(\bar{\nu} - \bar{f})\Big\}\Big] H_r(\bar{\nu})d\bar{\nu}$$

$$+ \Big[2\Lambda_1|H_b(\bar{f})|^2 + 2\Lambda_3\Phi_{nn}(\bar{f})\Big] H_r(\bar{f}) = 0 . \qquad (30)$$

Eq. 30 represents the general expression for the gradient of Eq. 20 with respect to $H_r(\cdot)$, which, when combined with the constraint equations, completely specifies the spatial frequency spectrum of the preprocessing filter. The constraint equations, Eq. 3, 4, and 5, may be rewritten in the spatial frequency domain as

$$K_1 = (B_2H_r,H_r) \qquad (31a)$$

which after substituting Eq. 23 into 31a becomes

$$K_1 = \int_{-\infty}^{\infty}\int H_b^*(\bar{f})H_b(\bar{\nu})H_r(\bar{\nu})H_r^*(\bar{f})\delta(\bar{f} - \bar{\nu})d\bar{\nu}d\bar{f}$$

$$= \int_{-\infty}^{\infty} |H_b(\bar{f})|^2|H_r(\bar{f})|^2d\bar{f}, \qquad (31b)$$

$$K_2 = (B_3 H_r, H_r) \tag{32a}$$

which after substituting Eq. 25 into 32a becomes

$$K_2 = \int_{-\infty}^{\infty}\int S(\bar{f} - \bar{\nu}) H_r(\bar{\nu}) H_r^*(\bar{f}) d\bar{\nu} d\bar{f}, \tag{32b}$$

and

$$K_3 = (B_4 H_r, H_r) \tag{33a}$$

which after substituting Eq. 27 into 33a becomes

$$K_3 = \int_{-\infty}^{\infty}\int \Phi_{nn}(\nu) \delta(\bar{f} - \bar{\nu}) H_r(\bar{\nu}) H_r^*(\bar{f}) d\bar{\nu} d\bar{f}$$

$$= \int_{-\infty}^{\infty} \Phi_{nn}(\bar{f}) |H_r(\bar{f})|^2 d\bar{f} \ . \tag{33b}$$

Before Eq. 30 can be reduced to a form more suitable for the evaluation of the spatial frequency spectrum of the preprocessing filter, the penalty functions $\omega(\bar{v})$ and $s(\bar{v})$ in Eq. 1 and 4 respectively, must be further examined. Since $\omega(\bar{v})$ is designed to influence the solution of $h_r(\bar{v})$ so that the composite imaging system point-spread function, $g(\bar{v})$, is duration limited, a possible choice for $\omega(\bar{v})$ would be

$$\omega(\bar{v}) = 1 \quad \text{for} \quad \bar{v}_1 \leq \bar{v} \leq \bar{v}_2$$

$$= \infty, \text{ otherwise.}$$

However, such a choice for $\omega(\bar{v})$ would lead to analytical difficulties in Eq. 30, since the Fourier transform of $\omega(\bar{v})$ does not

exist. Thus the expression for $\omega(\bar{v})$ must be chosen in such a manner that it allows enough flexibility to arbitrarily control the duration as well as the rate of decay of $g(\bar{v})$ and, in addition, to have a Fourier transform[28]. Also, because of the form of Eq. 1, $\omega(\bar{v})$ must be a positive valued function and also be convex to insure the existence of a global minimum to Eq. 1.

One function for $\omega(\bar{v})$[16] which satisfies all the previous requirements, written in terms of one variable, is

$$\omega(v) = \left[\frac{2v - v_1 - v_2}{v_2 - v_1} \right]^{2k} + c \tag{34}$$

for $$0 < c < 1$$

and k a positive integer, as shown in Figure 2. For convenience, $s(\bar{v})$ will also be described by the same type of function.

The following analysis is based upon a rectangular coordinate system. Eq. 30 may be rewritten in terms of the x- and y- components of $\bar{f}$ and $\bar{\nu}$,

$$\begin{aligned} \nabla I = \int_{-\infty}^{\infty}\int \Big[& H_b^*(f_x,f_y)H_b(\nu_x,\nu_y) \Big\{ W(f_x - \nu_x, f_y - \nu_y) \\ & + W^*(\nu_x - f_x, \nu_y - f_y)\Big\} + \Lambda_2 \Big\{ S(f_x - \nu_x, f_y - \nu_y) \\ & + S^*(\nu_x - f_x, \nu_y - f_y)\Big\}\Big] H_r(\nu_x,\nu_y)d\nu_x d\nu_y \\ & + \Big[2\Lambda_1 \left|H_b(f_x,f_y)\right|^2 + 2\Lambda_3\Phi_{nn}(f_x,f_y)\Big] H_r(f_x,f_y) = 0 . \end{aligned} \tag{35}$$

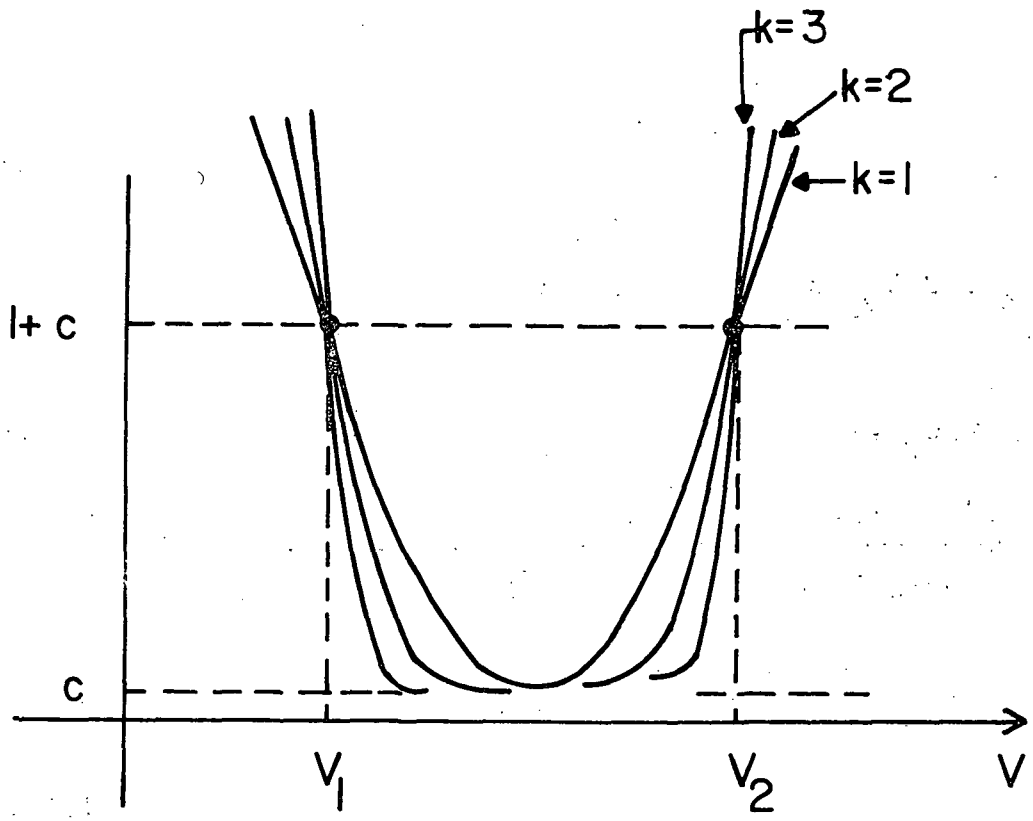

Figure 2 One-Dimensional Penalty Weighting Function

For convenience in handling the analysis with respect to a rectangular coordinate system, both $\omega(\bar{v})$ and $s(\bar{v})$ will be defined as the product of their x- and y- components, from Eq. 34,

$$\omega(\bar{v}) = \omega_x(x)\,\omega_y(y) \tag{36a}$$

$$= \left[\left\{\frac{2x - x_{w1} - x_{w2}}{x_{w2} - x_{w1}}\right\}^{2k_{wx}} + c_x\right]\left[\left\{\frac{2y - y_{w1} - y_{w2}}{y_{w2} - y_{w1}}\right\}^{2k_{wy}} + c_y\right] \tag{36b}$$

where

$$0 < c_x < 1$$
$$0 < c_y < 1 \tag{36c}$$

and for k_{wx} and k_{wy} positive integers.
Similarly,

$$s(\bar{v}) = s_x(x)\,s_y(y) \tag{37a}$$

$$= \left[\left\{\frac{2x - x_{s1} - x_{s2}}{x_{s2} - x_{s1}}\right\}^{2k_{sx}} + d_x\right]\left[\left\{\frac{2y - y_{s1} - y_{s2}}{y_{s2} - y_{s1}}\right\}^{2k_{sy}} + d_y\right] \tag{37b}$$

where

$$0 < d_x < 1$$
$$0 < d_y < 1 \tag{37c}$$

and for k_{sx} and k_{sy} positive integers.

Choosing $k_{wx} = 1 = k_{wy}$, the Fourier transform of Eq. 36b becomes

$$W(f_x, f_y) = W_x(f_x) W_y(f_y) \tag{38a}$$

where

$$W_x(f_x) = \frac{1}{(x_{w2} - x_{w1})^2} \left[- \frac{1}{\pi^2} \delta''(f_x) - j \frac{2(x_{w1} + x_{w2})}{\pi} \delta'(f_x) + \left\{ (x_{w1} + x_{w2})^2 + (x_{w2} - x_{w1})^2 c_x \right\} \delta(f_x) \right] \tag{38b}$$

and

$$W_y(f_y) = \frac{1}{(y_{w2} - y_{w1})^2} \left[- \frac{1}{\pi^2} \delta''(f_y) - j \frac{2(y_{w1} + y_{w2})}{\pi} \delta'(f_y) + \left\{ (y_{w1} + y_{w2})^2 + (y_{w2} - y_{w1})^2 c_y \right\} \delta(f_y) \right], \tag{38c}$$

A similar expression results from taking the Fourier transform of Eq. 37b,

$$S(f_x, f_y) = S_x(f_x) S_y(f_y) \tag{39a}$$

where

$$S_x(f_x) = \frac{1}{(x_{s2} - x_{s1})^2} \left[- \frac{1}{\pi^2} \delta''(f_x) - j \frac{2(x_{s1} + x_{s2})}{\pi} \delta'(f_x) + \left\{ (x_{s1} + x_{s2})^2 + (x_{s2} - x_{s1})^2 d_x \right\} \delta(f_x) \right] \tag{39b}$$

and

$$S_y(f_y) = \frac{1}{(y_{s2} - y_{s1})^2}\left[-\frac{1}{\pi^2}\delta''(f_y) - j\,\frac{2(y_{s1} + y_{s2})}{\pi}\,\delta'(f_y)\right.$$

$$\left. + \left\{(y_{s1} + y_{s2})^2 + (y_{s2} - y_{s1})^2\, d_y\right\}\delta(f_y)\right] . \qquad (39c)$$

If it is assumed, as would usually be the case, that the penalty functions, $\omega(x,y)$ and $s(x,y)$, are centered about the origin, then

$$\begin{aligned} x_{w1} &= -x_{w2} = x_\omega \\ y_{w1} &= -y_{w2} = y_w \\ x_{s1} &= -x_{s2} = x_s \\ y_{s1} &= -y_{s2} = y_s \quad . \end{aligned} \qquad (39d)$$

Substituting Eq. 39d into 38b, 38c, 39b, and 39c,

$$W_x(f_x) = -\frac{1}{4\pi^2 x_w^{\,2}}\,\delta''(f_x) + c_x\delta(f_x) \qquad (39e)$$

$$W_y(f_y) = -\frac{1}{4\pi^2 y_w^{\,2}}\,\delta''(f_y) + c_y\delta(f_y) \qquad (39f)$$

$$S_x(f_x) = -\frac{1}{4\pi^2 x_s^{\,2}}\,\delta''(f_x) + d_x\delta(f_x) \qquad (39g)$$

$$S_y(f_y) = -\frac{1}{4\pi^2 y_s^{\,2}}\,\delta''(f_y) + d_y\delta(f_y) \quad . \qquad (39h)$$

Substituting Eq. 39e, 39f, 39g, 39h, 39a, and 38a into Eq. 35,

$$\nabla I = \frac{H_b^*(f_x,f_y)}{8\pi^4 x_w^2 y_w^2} \left\{ \frac{\partial^4}{\partial f_x^2 \partial f_y^2} H_b(f_x,f_y) H_r(f_x,f_y) \right.$$

$$- 4\pi^2 y_w^2 c_y \frac{\partial^2}{\partial f_x^2} H_b(f_x,f_y) H_r(f_x,f_y)$$

$$- 4\pi^2 x_w^2 c_x \frac{\partial^2}{\partial f_y^2} H_b(f_x,f_y) H_r(f_x,f_y)$$

$$\left. + 8\pi^4 x_w^2 y_w^2 c_x c_y H_b(f_x,f_y) H_r(f_x,f_y) \right\}$$

$$+ \frac{\Lambda_2}{8\pi^4 x_s^2 y_s^2} \left\{ \frac{\partial^4}{\partial f_x^2 \partial f_y^2} H_r(f_x,f_y) - 4\pi^2 y_s^2 d_y \frac{\partial^2}{\partial f_x^2} H_r(f_x,f_y) \right.$$

$$\left. - 4\pi^2 x_s^2 d_x \frac{\partial^2}{\partial f_y^2} H_r(f_x,f_y) + 8\pi^4 x_s^2 y_s^2 d_x d_y H_r(f_x,f_y) \right\}$$

$$+ \left[2\Lambda_1 |H_b(f_x,f_y)|^2 + 2\Lambda_3 \Phi_{nn}(f_x,f_y) \right] H_r(f_x,f_y) = 0 \qquad (40a)$$

which, when expanded in terms of $H_r(f_x,f_y)$, becomes

$$
\begin{aligned}
\nabla I = {} & \left[A(f_x,f_y)H_b(f_x,f_y) + B(f_x,f_y)\right] \frac{\partial^4 H_r(f_x,f_y)}{\partial f_x^{\,2}\partial f_y^{\,2}} \\
& + 2A(f_x,f_y)\frac{\partial H_b(f_x,f_y)}{\partial f_y} \; \frac{\partial^3 H_r(f_x,f_y)}{\partial f_x^{\,2}\partial f_y} \\
& + 2A(f_x,f_y)\frac{\partial H_b(f_x,f_y)}{\partial f_x} \; \frac{\partial^3 H_r(f_x,f_y)}{\partial f_x \partial f_y^{\,2}} \\
& + 4A(f_x,f_y)\frac{\partial^2 H_b(f_x,f_y)}{\partial f_x \partial f_y} \; \frac{\partial^2 H_r(f_x,f_y)}{\partial f_x \partial f_y} \\
& + \left[A(f_x,f_y)\frac{\partial^2 H_b(f_x,f_y)}{\partial f_x^{\,2}} + E(f_x,f_y)H_b(f_x,f_y) + G(f_x,f_y)\right]\frac{\partial^2 H_r(f_x,f_y)}{\partial f_y^{\,2}} \\
& + \left[A(f_x,f_y)\frac{\partial^2 H_b(f_x,f_y)}{\partial f_y^{\,2}} + D(f_x,f_y)H_b(f_x,f_y) + F(f_x,f_y)\right]\frac{\partial^2 H_r(f_x,f_y)}{\partial f_x^{\,2}} \\
& + \left[2A(f_x,f_y)\frac{\partial^3 H_b(f_x,f_y)}{\partial f_x^{\,2}\partial f_y} + 2E(f_x,f_y)\frac{\partial H_b(f_x,f_y)}{\partial f_y}\right] \frac{\partial H_r(f_x,f_y)}{\partial f_y} \\
& + \left[2A(f_x,f_y)\frac{\partial^3 H_b(f_x,f_y)}{\partial f_x \partial f_y^{\,2}} + 2D(f_x,f_y)\frac{\partial H_b(f_x,f_y)}{\partial f_x}\right] \frac{\partial H_r(f_x,f_y)}{\partial f_x} \\
& + \left[C(f_x,f_y) + \frac{\partial^4 H_b(f_x,f_y)}{\partial f_x^{\,2}\partial f_y^{\,2}} + D(f_x,f_y)\frac{\partial^2 H_b(f_x,f_y)}{\partial f_x^{\,2}}\right. \\
& \qquad \left. + E(f_x,f_y)\frac{\partial^2 H_b(f_x,f_y)}{\partial f_y^{\,2}} + H(f_x,f_y)\right] H_r(f_x,f_y) = 0 \qquad (40b)
\end{aligned}
$$

where

$$A(f_x,f_y) = \frac{H_b^*(f_x,f_y)}{8\pi^4 x_w^2 y_w^2} \tag{40c}$$

$$B(f_x,f_y) = \frac{\Lambda_2 H_b^*(f_x,f_y)}{8\pi^4 x_s^2 y_s^2} \tag{40d}$$

$$C(f_x,f_y) = 2\Lambda_1 |H_b(f_x,f_y)|^2 + 2\Lambda_3 \Phi_{nn}(f_x,f_y) \tag{40e}$$

$$D(f_x,f_y) = -\frac{H_b^*(f_x,f_y)c_y}{2\pi^2 x_w^2} \tag{40f}$$

$$E(f_x,f_y) = -\frac{H_b^*(f_x,f_y)c_x}{2\pi^2 y_w^2} \tag{40g}$$

$$F(f_x,f_y) = -\frac{\Lambda_2 d_y}{2\pi^2 x_s^2} \tag{40h}$$

$$G(f_x,f_y) = -\frac{\Lambda_2 d_x}{2\pi^2 y_s^2} \tag{40i}$$

$$H(f_x,f_y) = c_x c_y |H_b(f_x,f_y)|^2 + \Lambda_2 d_x d_y \ . \tag{40j}$$

Thus Eq. 40 in conjunction with the constraint equations, Eq. 31b, 32b, and 33b, specify the general form of the required preprocessing filter spatial frequency transform.

1. <u>Separable Aperture</u>

A large class of physically realizable apertures may be modelled as separable apertures, where it is assumed that

$$H_b(f_x,f_y) = H_{bx}(f_x)H_{by}(f_y) \tag{41}$$

$$\Phi_{nn}(f_x,f_y) = \Phi_{nnx}(f_x)\Phi_{nny}(f_y) \tag{42}$$

$$H_r(f_x,f_y) = H_{rx}(f_x)H_{ry}(f_y), \tag{43}$$

With the assumptions of Eq. 41 to 43, the solution of Eq. 40 can be considerably simplified by use of the method of separation of variables. Instead of substi-stuting Eq. 41, 42, and 43 into Eq. 40 and separating Eq. 40 into two differential equations, one a function of f_x and the other a function of f_y, a somewhat more fundamental approach will be used.

Taking the inverse two-dimensional Fourier transform of Eq. 41,

$$h_b(x,y) = h_{bx}(x)h_{by}(y). \tag{44}$$

Similarly, Eq. 42 and 43 become respectively,

$$R_{nn}(x,y) = R_{nnx}(x)R_{nny}(y) \tag{45}$$

and

$$h_r(x,y) = h_{rx}(x)h_{ry}(y). \tag{46}$$

Writing Eq. 1 in terms of the two spatial dimensions,

$$F = \int_{-\infty}^{\infty}\int \omega(x,y)g^2(x,y)dxdy \tag{47}$$

where from Eq. 2,

$$g(x,y) = h_r(x,y)**h_b(x,y), \tag{48}$$

Substituting Eq. 44 and 46 into 48 and using the properties of two-dimensional convolution

$$\begin{aligned} g(x,y) &= \left[h_{rx}(x)h_{ry}(y)\right]**\left[h_{bx}(x)h_{by}(y)\right] \\ &= \left[h_{rx}(x)*h_{bx}(x)\right]\left[h_{ry}(y)*h_{by}(y)\right] \\ &= g_x(x)g_y(y) \end{aligned} \tag{49a}$$

where

$$g_x(x) = h_{rx}(x)*h_{bx}(x) \tag{49b}$$

$$g_y(y) = h_{ry}(y)*h_{by}(y). \tag{49c}$$

Substituting Eq. 36a and 49a into Eq. 47,

$$\begin{aligned} F &= \int_{-\infty}^{\infty} \omega_x(x)g_x^2(x)dx \int_{-\infty}^{\infty} \omega_y(y)g_y^2(y)dy \\ &= F_xF_y \end{aligned} \tag{50a}$$

where $$F_x = \int_{-\infty}^{\infty} \omega_x(x) g_x^2(x) dx \tag{50b}$$

$$F_y = \int_{-\infty}^{\infty} \omega_y(y) g_y^2(y) dy \ . \tag{50c}$$

Substituting Eq. 49a into Eq. 3,

$$K_1 = \int_{-\infty}^{\infty} g_x{}^2(x) dx \int_{-\infty}^{\infty} g_y{}^2(y) dy$$

$$= K_{1x} K_{1y} \tag{51a}$$

where $$K_{1x} = \int_{-\infty}^{\infty} g_x{}^2(x) dx \tag{51b}$$

and $$K_{1y} = \int_{-\infty}^{\infty} g_y{}^2(y) dy \ . \tag{51c}$$

Substituting Eq. 37a and 46 into Eq. 4,

$$K_2 = \int_{-\infty}^{\infty} s_x(x) h_{rx}{}^2(x) dx \int_{-\infty}^{\infty} s_y(y) h_{ry}{}^2(y) dy$$

$$= K_{2x} K_{2y} \tag{52a}$$

where $$K_{2x} = \int_{-\infty}^{\infty} s_x(x) h_{rx}{}^2(x) dx \tag{52b}$$

and $$K_{2y} = \int_{-\infty}^{\infty} s_y(y) h_{ry}{}^2(y) dy \ . \tag{52c}$$

Substituting Eq. 42 and 43 into Eq. 33b,

$$K_3 = \int_{-\infty}^{\infty} \Phi_{nnx}(f_x)\,|H_{rx}(f_x)|^2\, df_x \int_{-\infty}^{\infty} \Phi_{nny}(f_y)\,|H_{ry}(f_y)|^2\, df_y$$

$$= K_{3x}K_{3y} \tag{53a}$$

where $$K_{3x} = \int_{\infty}^{\infty} \Phi_{nnx}(f_x)\,|H_{rx}(f_x)|^2\, df_x \tag{53b}$$

$$= \int_{-\infty}^{\infty} \Phi_{nnTx}(f_x)\, df_x \tag{53c}$$

where $\Phi_{nnTx}(f_x)$ is the power spectral density of the x-component noise in the processed image, and since the noise is assumed to be a sample function from a stationary ergodic random process,

$$K_{3x} = E\left\{n_{Tx}^{\;2}(x)\right\}. \tag{53d}$$

Similarly,

$$K_{3y} = \int_{-\infty}^{\infty} \Phi_{nny}(f_y)\,|H_{ry}(f_y)|^2\, df_y \tag{54a}$$

$$= E\left\{n_{Ty}^{\;2}(y)\right\}. \tag{54b}$$

Thus, the problem of determining the optimum preprocessing filter point-spread function, $h_r(x,y)$, reduces to finding the $h_{rx}(x)$ that will minimize Eq. 50b

subject to the constraints of Eq. 51b, 52b, and 53d, and to finding the $h_{ry}(y)$ that will minimize Eq. 50c subject to the constraints of Eq. 51c, 52c, and 54b. The original two-dimensional preprocessing problem reduces to two one-dimensional processes which have similar equations. From the preceeding vector notational analysis used in Eq. 1 to 34 and Eq. 36 to 39, the system of equations necessary to solve for $h_{rx}(x)$ and $h_{ry}(y)$ may be formulated.

To solve for $h_{rx}(x)$, the augmented quadratic functional of the form of Eq. 8 determined by Eq. 50b, 51b, 52b, and 53d becomes

$$I_x = \int_{-\infty}^{\infty} \omega_x(x) g_x^{\,2}(x)\,dx + \Lambda_{1x}\int_{-\infty}^{\infty} g_x^{\,2}(x)\,dy$$

$$+ \Lambda_{2x}\int_{-\infty}^{\infty} s_x(x) h_{rx}^{\,2}(x)\,dx + \Lambda_{3x} E\left\{n_{Tx}^{\,2}(x)\right\}, \qquad (55)$$

which may be written as a quadratic functional in the spatial frequency domain from Eq. 20 as,

$$I_x = \left(B_{1x}H_{rx}, H_{rx}\right) + \Lambda_{1x}\left(B_{2x}H_{rx}, H_{rx}\right)$$

$$+ \Lambda_{2x}\left(B_{3x}H_{rx}, H_{rx}\right) + \Lambda_{3x}\left(B_{4x}H_{rx}, H_{rx}\right) \qquad (56)$$

where from Eq. 21b,

$$B_{1x}\left(f_x, \nu_x\right) = H_{bx}^{*}\left(f_x\right) H_{bx}\left(\nu_x\right) W_x\left(f_x - \nu_x\right) \qquad (57)$$

from Eq. 22b,

$$B'_{1x}(f_x,\nu_x) = H_{bx}(\nu_x)H_{bx}^*(f_x)W_x^*(\nu_x - f_x) \tag{58}$$

from Eq. 23,

$$B_{2x}(f_x,\nu_x) = H_{bx}^*(f_x)H_{bx}(\nu_x)\delta(f_x - \nu_x) \tag{59}$$

from Eq. 24,

$$B'_{2x}(f_x,f_y) = H_{bx}(\nu_x)H_{bx}^*(f_x)\delta(\nu_x - f_x) \tag{60}$$

from Eq. 25,

$$B_{3x}(f_x,\nu_x) = S_x(f_x - \nu_x) \tag{61}$$

from Eq. 26,

$$B'_{3x}(f_x,\sigma_x) = S_x^*(\nu_x - f_x) \tag{62}$$

from Eq. 27,

$$B_{4x}(f_x,\nu_x) = \Phi_{nnx}^*(\nu_x)\delta(f_x - \nu_x) \tag{63}$$

and from Eq. 28,

$$B'_{4x}(f_x,\nu_x) = \Phi_{nnx}(f_x)\delta(\nu_x - f_x). \tag{64}$$

The gradient of Eq. 56 may be written in the form of Eq. 29a

$$\nabla I_x = (B_{1x} + B_{1x}')H_{rx} + \Lambda_{1x}(B_{2x} + B_{2x}')H_{rx}$$

$$+ \Lambda_{2x}(B_{3x} + B_{3x}')H_{rx} + \Lambda_{3x}(B_{4x} + B_{4x}')H_{rx} \ , \quad (65)$$

which may be expanded to the form of Eq. 30,

$$\nabla I_x = \int_{\infty}^{\infty} \Big[H_{bx}^*(f_x) H_{bx}(\nu_x) \ \Big\{ W_x(f_x - \nu_x) + W_x^*(\nu_x - f_x) \Big\}$$

$$+ \Lambda_{2x} \Big\{ S_x(f_x - \nu_x) + S_x^*(\nu_x - f_x) \Big\} \Big] H_{rx}(\nu_x) d\nu_x$$

$$+ \Big[2\Lambda_{1x} |H_{bx}(f_x)|^2 + 2\Lambda_{3x}\Phi_{nnx}(f_x) \Big] H_{rx}(f_x) = 0 \ . \quad (66)$$

Substituting Eq. 39e and 39g into Eq. 66, the following differential equation arises

$$H_{rx}''(f_x) + \frac{2H_{bx}^*(f_x) H_{bx}'(f_x) X_s^2}{|H_{bx}(f_x)|^2 X_s^2 + \Lambda_{2x} X_w^2} + H_{rx}'(f_x)$$

$$+ X_s^2 \frac{\Big[H_{bx}^*(f_x) H_{bx}''(f_x) - 4\pi^2 X_w^2 \Big\{ (c_x + \Lambda_{1x}) |H_{bx}(f_x)|^2 + \Lambda_{3x}\Phi_{nnx}(f_x) + d_x \Big\} \Big]}{|H_{bx}(f_x)|^2 X_s^2 + \Lambda_{2x} X_w^2} H_{rx}(f_x)$$

$$= 0. \quad (67)$$ [43]

---

[43] For derivation see Appendix C.

From Eq. 31 and 51,

$$K_{1x} = \int_{\infty}^{\infty} |H_{bx}(f_x)|^2 |H_{rx}(f_x)|^2 \, df_x \tag{68}$$

and from Eq. 32, 39g, and 52

$$K_{2x} = -\frac{1}{4\pi^2 X_s^2} \int_{-\infty}^{\infty} \Big[H''_{rrx}(f_x) H_{rrx}(f_x)$$

$$+ H''_{rix}(f_x) H_{rix}(f_x) \Big] df_x$$

$$+ d_x \int_{-\infty}^{\infty} |H_{rx}(f_x)|^2 \, df_x \tag{69a}$$ [4]

where $$H_{rx}(f_x) = H_{rrx}(f_x) + jH_{rix}(f_x) \tag{69b}$$

and where $H_{rrx}(f_x)$ is the real part and $H_{rix}(f_x)$ is the imaginary part of $H_{rx}(f_x)$.

Restating Eq. 53b,

$$K_{3x} = \int_{-\infty}^{\infty} \Phi_{nnx}(f_x) |H_{rx}(f_x)|^2 \, df_x \, . \tag{53b}$$

Thus the simultaneous solution of the differential equation Eq. 67, and the constraint equations, Eq. 68, 69, and 53b, specify the form of the x-component of the spatial frequency transform, or equivalently

---

[4] For derivation see Appendix D.

the point-spread function, of the preprocessing filter.

In a similar manner it is possible to solve for $h_{ry}(y)$ by forming an augmented quadratic functional of the form of Eq. 8 determined by Eq. 50c, 51c 52c, and 54b,

$$I_y = \int_{-\infty}^{\infty} \omega_y(y) g_y^{\,2}(y)\,dy + \Lambda_{1y} \int_{-\infty}^{\infty} g_y^{\,2}(y)\,dy$$

$$+ \Lambda_{2y} \int_{-\infty}^{\infty} s_y(y) h_{ry}^{\,2}(y)\,dy + \Lambda_{3y} E\left\{ n_{Ty}^{\,2}(y) \right\}. \qquad (70)$$

By following an analogous procedure to that used for determining $h_{rx}(x)$ in Eq. 55-69, the equations which specify $h_{ry}(y)$ may be formulated. Only the results will be stated since the derivation of the equations for $h_{ry}(y)$ is identical in form to that given for $h_{rx}(x)$ with the appropriate change in variables from x- to y- dependency.

The differential equation specifying the form of $H_{ry}(f_y)$ becomes,

$$H''_{ry}(f_y) + \frac{2H_{by}^*(f_y) H'_{by}(f_y) y_s^{\,2}}{|H_{by}(f_y)|^2 y_s^{\,2} + \Lambda_{2y} y_w^{\,2}} H_{ry}(f_y)$$

$$+ y_s^{\,2} \frac{\left[H_{by}^*(f_y) H''_{by}(f_y) - 4\pi^2 y_w^{\,2} \left\{ (c_y + \Lambda_{1y}) |H_{by}(f_y)|^2 + \Lambda_{3y} \Phi_{nny}(f_y) + d_y \right\} \right]}{|H_{by}(f_y)|^2\, y_s^{\,2} + \Lambda_{2y} y_w^{\,2}} H_{ry}(f_y)$$

$$= 0, \qquad (71)$$

while the constraint equations become,

$$K_{1y} = \int_{-\infty}^{\infty} |H_{by}(f_y)|^2 |H_{ry}(f_y)|^2 \, df_y \tag{72}$$

$$K_{2y} = -\frac{1}{4\pi^2 y_s^2} \int_{-\infty}^{\infty} \Big[H''_{rry}(f_y) H_{rry}(f_y)$$

$$+ H''_{riy}(f_y) H_{riy}(f_y) \Big] \, df_y + d_y \int_{-\infty}^{\infty} |H_{ry}(f_y)|^2 \, df_y \tag{73}$$

and $$K_{3y} = \int_{-\infty}^{\infty} \Phi_{nny}(f_y) |H_{ry}(f_y)|^2 \, df_y. \tag{54a}$$

Thus the simultaneous solution of Eq. 71, 72, 73, and 54a will specify the y-component of the preprocessing filter.

2. <u>Radially Symmetric Aperture</u>

Probably the most common type of aperture, because of the physical ease in construction, is the radially symmetric aperture. For this case it is assumed that

$$H_b(f_x, f_y) = H_{br}(f_r) \tag{74}$$

$$\Phi_{nn}(f_x, f_y) = \Phi_{nnr}(f_r) \tag{75}$$

and $$H_r(f_x, f_y) = H_{rr}(f_r) \tag{76}$$

where $$f_x^2 + f_y^2 = f_r^2. \tag{77}$$

The solution to Eq. 40 is analogous to the solution for $h_{rx}(x)$ where all variables dependent upon x are replaced by corresponding variables dependent upon r. From Eq. 36a,

$$\omega(\bar{v}) = \omega_r(r)$$

$$= \left[\frac{2r - r_{w1} - r_{w2}}{r_{w2} - r_{w1}} \right]^{2k_{wr}} \tag{78a}$$

for k_{wr} a positive integer and

$$r^2 = x^2 + y^2. \tag{78b}$$

From Eq. 37a,

$$s(\bar{v}) = s_r(r)$$

$$= \left[\frac{2r - r_{s1} - r_{s2}}{r_{s2} - r_{s1}} \right]^{2k_{sr}} \tag{79}$$

for k_{sr} a positive integer.

Choosing $k_{wr} = 1 = k_{sr}$ and

$$r_{w1} = -r_{w2} = r_w \tag{80}$$

$$r_{s1} = -r_{s2} = r_s,$$

the Fourier transforms of Eq. 78a and 79 become

$$W_r(f_r) = -\frac{1}{4\pi^2 r_w^2}\,\delta''(f_r) \tag{81}$$

$$S_r(f_r) = -\frac{1}{4\pi^2 r_s^2}\,\delta''(f_r). \tag{82}$$

To solve for $h_{rr}(r)$, the augmented quadratic functional of the form of Eq. 8 which must be minimized with respect to $h_{rr}(r)$ becomes,

$$\begin{aligned} I_r = &\int_{-\infty}^{\infty} \omega_r(r) g_r^2(r)\,dr + \Lambda_{1r}\int_{-\infty}^{\infty} g_r^2(r)\,dr \\ &+ \Lambda_{2r}\int_{-\infty}^{\infty} s_r(r) h_{rr}^2(r)\,dr \\ &+ \Lambda_{3r}\, E\left\{n_{Tr}^2(r)\right\} . \end{aligned} \tag{83}$$

By following an analogous procedure to that used for determining $h_{rx}(x)$ in Eq. 55-69, the equations which specify $h_{rr}(r)$ may be formulated. Again, only the results will be stated since the derivation of the equations for $h_{rr}(r)$ is identical in form to that given for $h_{rx}(x)$ with the appropriate change in variables.

The differential equation specifying the form of $H_{rr}(f_r)$ becomes,

$$H''_{rr}(f_r) + \frac{2H_{br}^*(f_r)H'_{br}(f_r)r_s^2}{|H_{br}(f_r)|^2 r_s^2 + \Lambda_{2r}r_w^2} H'_{rr}(f_r)$$

$$+ r_s^2 \frac{\left[H_{br}^*(f_r)H''_{br}(f_r) - 4\pi^2 r_w^2 \left\{\Lambda_{1r}|H_{br}(f_r)|^2 + \Lambda_{3r}\Phi_{nnr}(f_r)\right\}\right]}{|H_{br}(f_r)|^2 r_s^2 + \Lambda_{2r}r_w^2} H_{rr}(f_r)$$

$$= 0 , \tag{83}$$

while the constraint equations become,

$$K_{1r} = \int_{-\infty}^{\infty} |H_{br}(f_r)|^2 |H_{rr}(f_r)|^2 \, df_r \tag{84}$$

$$K_{2r} = -\frac{1}{4\pi^2 r_s^2} \int_{-\infty}^{\infty} \Big[H''_{rrr}(f_r)H_{rrr}(f_r)$$

$$+ H''_{rir}(f_r)H_{rir}(f_r)\Big] \, df_r \tag{85}$$

and

$$K_{3r} = \int_{-\infty}^{\infty} \Phi_{nnr}(f_r)|H_{rr}(f_r)|^2 \, df_r . \tag{86}$$

Thus the simultaneous solution of Eq. 83, 84, 85, and 86 will give the spatial frequency spectrum of the required preprocessing filter.

V. NUMERICAL SOLUTION TECHNIQUE FOR PREPROCESSING FILTER

Since the form of the differential equations specifying the shape of $h_{rx}(x)$, Eq. 67, $h_{ry}(y)$, Eq. 71, and $h_{rr}(r)$, Eq. 83, is the same, a single method of solution is applicable. In this discussion specific reference will be made to the solution of Eq. 67, 68, 69, and 53b for $H_{rx}(f_x)$.

Eq. 67 may be written in the form,

$$H''_{rx}(f_x) + A(f_x)H'_{rx}(f_x) + B(f_x)H_{rx}(f_x) = 0 \tag{87}$$

where

$$A(f_x) = \frac{2H_{bx}^*(f_x)H_{bx}(f_x)x_s^2}{|H_{bx}(f_x)|^2 x_s^2 + \Lambda_{2x}x_w^2} \tag{88}$$

and

$$B(f_x) = x_s^2 \frac{\left[H_{bx}^*(f_x)H''_{bx}(f_x) - 4\pi^2 x_w^2\left\{(c_x+\Lambda_{1x})|H_{bx}(f_x)|^2 + \Lambda_{3x}\Phi_{nnx}(f_x) + d_x\right\}\right]}{|H_{bx}(f_x)|^2 x_s^2 + \Lambda_{2x}x_w^2}. \tag{89}$$

It should be noted that $H_{rx}(f_x)$, $A(f_x)$ and $B(f_x)$ are complex. Defining

$$H_{rx}(f_x) = H_{rrx}(f_x) + jH_{rix}(f_x) \tag{69b}$$

$$A(f_x) = A_r(f_x) + jA_i(f_x) \tag{90}$$

and

$$B(f_x) = B_r(f_x) + jB_i(f_x) \tag{91}$$

as the sum of real and imaginary components, then by substituting Eq. 69b, 90, and 91 into Eq. 87,

$$\left[H''_{rrx}(f_x) + jH''_{rix}(f_x)\right] + \left[A_r(f_x) + jA_i(f_x)\right]\left[H'_{rrx}(f_x) + jH'_{rix}(f_x)\right]$$
$$+ \left[B_r(f_x) + jB_i(f_x)\right]\left[H_{rrx}(f_x) + jH_{rix}(f_x)\right] = 0 \tag{92}$$

or by collecting the real and imaginary components,

$$H''_{rrx}(f_x) + A_r(f_x)H'_{rrx}(f_x) - A_i(f_x)H'_{rix}(f_x) + B_r(f_x)H_{rrx}(f_x)$$

$$- B_i(f_x)H_{rix}(f_x) + j\Big[H''_{rix}(f_x) + A_i(f_x)H'_{rrx}(f_x)$$

$$+ A_r(f_x)H'_{rix}(f_x) + B_i(f_x)H_{rrx}(f_x) + B_r(f_x)H_{rix}(f_x)\Big] = 0. \tag{93}$$

Eq. 93 may be separated into two differential equations formed by the real and imaginary components of Eq. 93[17],

$$H''_{rrx}(f_x) + A_r(f_x)H'_{rrx}(f_x) - A_i(f_x)H'_{rix}(f_x) + B_r(f_x)H_{rrx}(f_x)$$

$$- B_i(f_x)H_{rix}(f_x) = 0, \tag{94}$$

and

$$H''_{rix}(f_x) + A_i(f_x)H'_{rrx}(f_x) + A_r(f_x)H'_{rix}(f_x) + B_i(f_x)H_{rrx}(f_x)$$

$$+ B_r(f_x)H_{rix}(f_x) = 0. \tag{95}$$

Thus, the original complex second order differential equation, Eq. 87, has been reduced to a system of second order differential equations, Eq. 94, 95.

To make use of the many subprograms available for handling systems of first order differential equations, Eq. 94 and 95 may be reduced to a system of first-order differential equations[17] by introducing the variables,

$$H_1(f_x) = H_{rrx}(f_x)$$

$$H_2(f_x) = H'_{rrx}(f_x)$$

$$H_3(f_x) = H_{rix}(f_x)$$

$$H_4(f_x) = H'_{rix}(f_x)$$

By substituting Eq.96 into 94 and 95, the following system of first-order differential equations is formed.

$$
\begin{aligned}
H_1'(f_x) &= H_2(f_x) \\
H_2'(f_x) &= -B_r(f_x)\,H_1(f_x) - A_r(f_x)\,H_2(f_x) + B_i(f_x)\,H_3(f_x) \\
&\quad + A_i(f_x)\,H_4(f_x) \\
H_3'(f_x) &= H_4(f_x) \\
H_4'(f_x) &= -B_i(f_x)\,H_1(f_x) - A_i(f_x)\,H_2(f_x) - B_r(f_x)\,H_3(f_x) \\
&\quad - A_r(f_x)\,H_4(f_x)\,. \qquad (97)
\end{aligned}
$$

After specifying initial conditions for $H_1(0)$, $H_2(0)$, $H_3(0)$ and $H_4(0)$, $H_{rx}(f_x)$ may be obtained as

$$H_{rx}(f_x) = H_1(f_x) + j\,H_3(f_x)\,. \qquad (98)$$

In order to solve for $H_{rx}(f_x)$, the system of differential equations, Eq. 97, plus the constraint equations, Eq. 67, 69, and 53b, must be solved simultaneously. The constraint equations may be considered to be a system of non-linear equations where the unknown parameters are Λ_{1x}, Λ_{2x}, and Λ_{3x}. For a given value of these parameters, Eq.97 may be used to determine $H_{rx}(f_x)$ and the constraint equations checked to determine if they are satisfied. If the constraint equations are not satisfied, appropriate pertubations in Λ_{1x}, Λ_{2x}, and Λ_{3x} can be made and a new value of $H_{rx}(f_x)$ computed. This procedure would be repeated until the constraint equations are satisfied. A program for solving a system of non-linear equations has been developed and could be used for determining Λ_{1x}, Λ_{2x}, and Λ_{3x}.

Two possible problems which might prevent obtaining a solution for $H_{rx}(f_x)$ using the procedure described above must be considered. One problem would be the possibility of obtaining

a solution which would represent a local minimum to Eq. 55 but not necessarily the best solution which would represent a global minimum. This problem should not arise because of the choice of the functionals in Eq. 50b, 51b, 52b, and 53d. Since all of these functionals are convex, a global minimum is assured[16].

The second problem that could arise is related to the solution of the system of differential equations, Eq. 97. Is it possible for a given set of Λ_{1x}, Λ_{2x}, and Λ_{3x} that either no solution or several solutions to Eq. 97 exists? A theorem in Section 7 of [26] states that as long as $B_r(f_x)$, $B_i(f_x)$, $A_r(f_x)$, and $A_i(f_x)$ are continuous functions, then for a given set of initial conditions one and only one set of solutions exist.

VI. CONCLUSIONS

The preceeding analysis was based upon $k_{wx} = k_{wy} = k_{sx} = k_{sy} = 1$, or for $k_{wr} = k_{sr} = 1$, as a convenience for formulating the equations specifying the required preprocessing filter. The larger the integer value of k_w or k_s, the greater the reduction in the effective scanner radius of the composite imagery system. However, the size of the system of differential equations increases and results in a system of $4k_{max}$ linear differential equations, where k_{max} is the largest integer value of k_{wx}, k_{wy}, k_{sx}, k_{sy}, or k_{wr}, k_{sr}. For example, if $k_{wx} = 3$, $k_{wy} = 2$, $k_{sx} = k_{sy} = 1$, then a system of differential equations similar to equation 97 will result composed of 12 simultaneous linear differential equations. However, one of the major advantages of this proposed technique for image preprocessing is that it is sufficiently general to allow for any integer value of k_w and k_s and thus allows the effective scanner radius of the composite imaging system to be arbitrarily reduced, subject primarily to the noise constraint.

Although Equation 40 in conjunction with Equation 31b, 32b, and 33b, specify the general form of the spatial frequency transform of any preprocessing filter, it was shown that in the case of a separable aperture or a radially symmetric aperture the solution can be considerable simplified. These two classes represent the most common types of apertures used for data collection.

There exist many functions which are separable in the sense that the function can be expressed as the product of its x- and y- components. By appropriately choosing such a function, many types of asymmetric apertures may be approximated as symmetric, separable apertures. For example, by properly selecting the parameters of a two-dimensional Gaussian function, an elliptical aperture of uniform density could be approximated. By using a two-dimensional Gaussian function, it is also possible to approximate a radially symmetric aperture as a separable aperture. The

principal advantage for choosing a separable aperture is that two-dimensional convolutions with such an aperture is equivalent to two one-dimensional convolutions along each orthogonal axis. Thus preprocessing time for a given data set can be significantly reduced by using a separable aperture.

The preprocessing filter theory presented in this paper, and in particular the filters described in Equations 67, 71, and 83, will be applied to the multispectral scanner data at LARS to determine the best set of parameters for reducing the effective scanner aperture and the effect of such a reduction on classification accuracy.

References

1. Andrews, H. C., A. G. Tescher, and R. P. Kruger, "Image Processing by Digital Computer", I.E.E.E. Spectrum, July 1972, pp. 20-32.

2. Arguello, R., H. Sellner, and J. A. Stuller, "Transfer Function Compensation of Sampled Imagery", I.E.E.E. Transactions on Computers, July 1972, pp. 812-818.

3. Becherer, R. J., "Optimum Shaded Apertures for Reducing Photographic Grain Noise", SPIE - Image Information Recovery Seminar Proceedings, Oct. 24-25, 1968, pp. 89-96.

4. Bracewell, R. N., "Correcting for Gaussian Aerial Snoothing", Austrialian Journal of Physics, 8:54, 1955, pp. 54-60.

5. Bracewell, R. N., "A Method of Correcting the Broadening of X-ray Line Profiles", Austrialian Journal of Physics, 8:61, 1955, pp. 61-67.

6. Bracewell, R. N., "Correcting for Running Means by Successive Substitutions", Austrialian Journal of Physics, Vol. 8, No. 3, 1955, pp. 329-334.

7. Epstein, B., Linear Functional Analysis, W. B., Saunders, Co., 1970.

8. Franks, L. E., Signal Theory, Prentice-Hall, 1969.

9. Harris, J. L. Sr., "Image Evaluation and Restoration", Journal of the Optical Society of America", May 1966, pp. 569-574.

10. Harris, J. L. Sr.,"Image Restoration", Proceedings of the National Aerospace Electronics Conference, 1963, pp. 403-408.

11. Horner, J. L. and M. J. Rycus, "Restoration of Linearly Smeared Transparencies", SPIE - Image Information Recovery Seminar Proceedings, Oct. 24-25, 1968, pp. 121-129.

12. Huang, T. S., W. F. Schreiber, et. al., "Image Processing", Proceedings of the I.E.E.E., Nov. 1971, pp. 1586-1609.

13. Kinzly, R. E., R. C. Haas, and P. G. Roetling, "Designing Filters for Image Processing to Recover Detail", SPIE - Image Information Recovery Seminar Proceedings, Oct. 24-25, 1968, pp. 97-104.

14. McGillem, C. D. and T. E. Riemer, "Moiré Patterns and Two-Dimensional Aliasing in Line Scanner Data Acquisition Systems", LARS Information Note 111772.

15. Nathan, R., R. Selzer, and F. Billingsley, "Image Processing", JPL Technical Report 30-792, Jan30, 1970.

16. Pierre, D. A., Optimization Theory with Applications, Wiley, 1969.

17. Pontryagin, L. S., Ordinary Differential Equations, Addison-Wesley, 1962.

18. Pratt, W. K., "Generalized Wiener Filtering Computation Techniques", I.E.E.E. Transactions on Computers, July 1972, pp. 636-641.

19. Rice, R. B., "Inverse Convolution Filters", Geophysics, Vol. XXVII, No. 1, Feb. 1962, pp. 4-18.

20. Robbins, G. M. and T. S. Huang "Inverse Filtering for Linear Shift-Variant Imaging Systems", Proceedings of the I.E.E.E., July 1972, pp. 862-872.

21. Robinson, E. A., Statistical Communication and Detection, Charles Griffin and Co., 1967.

22. Slepian, D., "Restoration of Photographs Blurred by Image Motion", Bell System Technical Journal, Dec. 1967, pp. 2353-2362.

23. Sondhi, M. M., "Image Restoration: The Removal of Spatially Invariant Degradations", Proceedings of the I.E.E.E., July 1967, pp. 842-853.

24. Smith, H. A., "Improvement of the Resolution of a Linear Scanning Device", SIAM Journal on Applied Mathematics, Jan. 1966, Vol. 14, No. 1.

25. Stuller, J. A., "An Algebraic Approach to Image Restoration Filter Design", Computer Graphics and Image Processing, Dec. 1972, pp. 107-122.

26. Yosida, K., Lectures on Differential and Integral Equations Interscience Publishers, Inc., 1960.

27. Yu, F. T. S., "Image Restoration, Uncertainty, and Information", Applied Optics, Jan, 1969, pp. 53-58.

28. Zemanian, A. H., Distribution Theory and Transform Analysis, McGraw-Hill, 1965.

Bibliography

1. Dettman, J. W., Mathematical Methods in Physics and Engineering, McGraw-Hill, 1962.

2. Papoulis, A., The Fourier Integral and Its Applications, McGraw-Hill, 1962.

3. Papoulis, A., Systems and Transforms with Applications in Optics, McGraw-Hill, 1968.

4. Temes, G. A., V. Barcilon, and F. C. Marshall III, The Optimization of Bandlimited Systems", Proceedings of I.E.E.E., Feb 1973, pp. 196-234.

APPENDIX A - DERIVATION OF EQUATION 18

The gradient of Eq. 9 may be written as

$$\nabla I = \int_{-\infty}^{\infty} [a_1 (\bar{u}, \bar{z}) + a_1' (\bar{u}, \bar{z})] \, h_r (\bar{z}) \, d\bar{z}$$

$$+ \Lambda_1 \int_{-\infty}^{\infty} [a_2 (\bar{u}, \bar{z}) + a_2' (\bar{u}, z)] \, h_r (\bar{z}) \, d\bar{z}$$

$$+ \Lambda_2 \int_{-\infty}^{\infty} [a_3 (\bar{u}, \bar{z}) + a_3' (\bar{u}, \bar{z})] \, h_r (\bar{z}) \, d\bar{z}$$

$$+ \Lambda_3 \int_{-\infty}^{\infty} [a_4 (\bar{u}, \bar{z}) + a_4' (\bar{u}, \bar{z})] \, h_r (\bar{z}) \, d\bar{z} \, . \qquad \text{(A1)}$$

Substituting Eq. 12, 14, 15, 16, and 17 with Eq. A1,

$$\nabla I = \int_{-\infty}^{\infty} [a_1 (\bar{u}, \bar{z}) + \Lambda_1 a_2 (\bar{u}, \bar{z}) + \Lambda_3 a_4 (\bar{u}, \bar{z})] \, h_r (\bar{z}) \, d\bar{z}$$

$$+ \Lambda_2 \int_{-\infty}^{\infty} s(\bar{u}) \quad \delta(\bar{u} - \bar{z}) \, H_r (\bar{z}) \, d\bar{z}$$

$$= \int_{-\infty}^{\infty} [a_1 (\bar{u}, \bar{z}) + \Lambda_1 a_2 (\bar{u}, \bar{z}) + \Lambda_3 a_4 (\bar{u}, \bar{z})] \, h_r (z) \, dz$$

$$+ \Lambda_2 \, s(\bar{u}) \, h_r(\bar{u}) = 0 \, . \qquad \text{(A2)}$$

APPENDIX B - DERIVATION OF EQUATIONS 21b, 23, 25, and 27

Substituting Eq. 10 into 21a,

$$B_1(\bar{f},\bar{\nu}) = \iiint_{-\infty}^{\infty} w(\bar{v})\ h_b(\bar{v} - \bar{z})\ h_b(\bar{v} - \bar{u})\ d\bar{v}\ e^{-j2\pi\bar{f}\bar{u}}\ e^{j2\pi\bar{\nu}\bar{z}}\ d\bar{u}\ d\bar{z}. \tag{B1}$$

Introducing a change of variable in Eq. B1 where

$$\bar{v} - \bar{u} = \bar{\alpha} \tag{B2}$$

$$B_1(\bar{f},\bar{\nu}) = \iiint_{-\infty}^{\infty} w(\bar{v})\ h_b(\bar{v} - \bar{z})\ h_b(\bar{\alpha})\ e^{-j2\pi\bar{f}(\bar{v} - \bar{\alpha})}\ e^{j2\pi\bar{\nu}\bar{z}}\ d\bar{v}\ d\bar{\alpha}\ d\bar{z}$$

$$= H_b^*(\bar{f}) \iint_{-\infty}^{\infty} w(\bar{v})\ h_b(\bar{v} - \bar{z})\ e^{-j2\pi\bar{f}\bar{v}}\ e^{j2\pi\bar{\nu}\bar{z}}\ d\bar{v}\ d\bar{z} \tag{B3}$$

and introducing another change of variable in Eq. B3 where

$$\bar{v} - \bar{z} = \bar{\beta} \tag{B4}$$

$$B_1(\bar{f},\bar{\nu}) = H_b^*(\bar{f}) \iint_{-\infty}^{\infty} w(\bar{v})\ h_b(\bar{\beta})\ e^{-j2\pi\bar{f}\bar{v}}\ e^{j2\pi\bar{\nu}(\bar{v} - \bar{\beta})}\ d\bar{v}\ d\bar{\beta}$$

$$= H_b^*(\bar{f})\ H_b(\bar{\nu}) \int^{\infty} w(\bar{v})\ e^{-j2\pi\bar{v}(\bar{f} - \bar{\nu})}\ d\bar{v}$$

$$= H_b^*(\bar{f})\ H_b(\bar{\nu})\ W(\bar{f} - \bar{\nu}), \tag{B5}$$

Following a similar development

$$B_2(\bar{f},\ \bar{\nu}) = \iint_{-\infty}^{\infty} a_2(\bar{u},\ \bar{z})\ e^{-j2\pi\bar{f}\bar{u}}\ e^{j2\pi\bar{\nu}\bar{z}}\ d\bar{u}\ d\bar{z} \tag{B6a}$$

which after substituting Eq. 11 into B6a becomes

$$B_2(\bar{f},\bar{\nu}) = \iiint_{-\infty}^{\infty} h_b(\bar{v} - \bar{z})\ h_b(\bar{v} - \bar{u})\ e^{-j2\pi\bar{f}\bar{u}}\ e^{j2\pi\bar{\nu}\bar{z}}\ d\bar{v}\ du\ dz\ . \tag{B6b}$$

Introducing the change of variable of Eq. B2 into B6b,

$$B_2(\bar{f},\bar{\nu}) = \iiint_{-\infty}^{\infty} h_b(\bar{v} - \bar{z})\ h_b(\bar{\alpha})\ e^{-j2\pi\bar{f}(\bar{v} - \bar{\alpha})}\ e^{j2\pi\bar{\nu}\bar{z}}\ d\bar{v}\ d\bar{\alpha}\ d\bar{z}$$

$$= H_b^*(\bar{f}) \iint_{-\infty}^{\infty} h_b(\bar{v} - \bar{z})\ e^{-j2\pi\bar{f}\bar{v}}\ e^{j2\pi\bar{\nu}\bar{z}}\ d\bar{v}\ dz \tag{B7}$$

and introducing the change of variable of Eq. B4 into B7,

$$B_2(\bar{f},\bar{\nu}) = H_b^*(\bar{f}) \iint_{-\infty}^{\infty} h_b(\bar{\beta})\ e^{-j2\pi\bar{f}\bar{v}}\ e^{j2\pi\bar{\nu}(\bar{v} - \bar{\beta})}\ d\bar{v}\ d\bar{\beta}$$

$$= H_b^*(\bar{f})\ H_b(\bar{\nu}) \int_{-\infty}^{\infty} e^{-j2\pi\bar{v}(\bar{f} - \bar{\nu})}\ d\bar{v}$$

$$= H_b^*(\bar{f})\ H_b(\bar{\nu})\ \delta(\bar{f} - \bar{\nu}). \tag{B8}$$

$$B_3(\bar{f},\ \bar{\nu}) = \iint_{-\infty}^{\infty} a_3(\bar{u},\ \bar{z})\ e^{-j2\pi\bar{f}\bar{u}}\ e^{j2\pi\bar{\nu}\bar{z}}\ d\bar{u}\ d\bar{z}. \tag{B9}$$

Substituting Eq. 12 into B9,

$$B_3(\bar{f},\ \bar{\nu}) = \iint_{-\infty}^{\infty} s(\bar{u})\ \delta(\bar{u} - \bar{z})\ e^{-j2\pi\bar{f}\bar{u}}\ e^{j2\pi\bar{\nu}\bar{z}}\ d\bar{u}\ d\bar{z}$$

$$= \int_{-\infty}^{\infty} s(\bar{z})\ e^{-j2\pi\bar{z}(\bar{f} - \bar{\nu})}\ d\bar{z}$$

$$= S(\bar{f} - \bar{\nu}). \tag{B10}$$

$$B_4(\bar{f},\ \bar{\nu}) = \iint_{-\infty}^{\infty} a_4(\bar{u},\ \bar{z})\ e^{-j2\pi\bar{f}\bar{u}}\ e^{j2\pi\bar{\nu}\bar{z}}\ d\bar{u}\ d\bar{z}. \tag{B11}$$

Substituting Eq. 13 into B11,

$$B_4(\bar{f},\ \bar{\nu}) = \iint_{-\infty}^{\infty} R_{nn}(\bar{z} - \bar{u})\ e^{-j2\pi\bar{f}\bar{u}}\ e^{j2\pi\bar{\nu}\bar{z}}\ d\bar{u}\ d\bar{z}. \tag{B12}$$

Introducing the change of variable

$$\bar{z} - \bar{u} = \bar{\alpha} \tag{B13}$$

into Eq. B12,

$$B_4(\bar{f}, \bar{\nu}) = \iint_{\infty}^{\infty} R_{nn}(\bar{\alpha})\ e^{-j2\pi\bar{f}\bar{u}}\ e^{j2\pi\bar{\nu}(\bar{u} + \bar{\alpha})}\ d\bar{u}\ \ d\bar{\alpha}$$

$$= \Phi_{nn}{}^*(\bar{\nu}) \int_{\infty}^{\infty} e^{-j2\pi\bar{u}(\bar{f} - \bar{\nu})}\ d\bar{u}$$

$$= \Phi_{nn}{}^*(\bar{\nu})\ \ \delta(\bar{f} - \bar{\nu}). \tag{B14}$$

APPENDIX C - DERIVATION OF EQUATION 67

Substituting Eq. 39e and 39g into Eq. 66,

$$\nabla I_x = \int_{\infty}^{\infty} \Bigg[H_{bx}^*(f_x)\, H_{bx}(\nu_x) \Bigg\{ -\frac{1}{4\pi^2 x_w^2}\, \delta''(f_x - \nu_x) + c_x \delta(f_x - \nu_x)$$

$$- \frac{1}{4\pi^2 x_w^2}\, \delta''(\nu_x - f_x) + c_x \delta(\nu_x - f_x) \Bigg\}$$

$$+ \Lambda_{2x} \Bigg\{ -\frac{1}{4\pi^2 x_s^2}\, \delta''(f_x - \nu_x) + d_x \delta(f_x - \nu_x)$$

$$- \frac{1}{4\pi^2 x_s^2}\, \delta''(\nu_x - f_x) + d_x \delta(\nu_x - f_x) \Bigg\} \Bigg] H_{rx}(\nu_x)\, d\nu_x$$

$$+ \left[2\Lambda_{1x} \left| H_{bx}(f_x) \right|^2 + 2\Lambda_{3x}\, \Phi_{nnx}(f_x) \right] H_{rx}(f_x) = 0, \qquad \text{(C1)}$$

or

$$\nabla I_x = -\frac{H_{bx}^*(f_x)}{2\pi^2 x_w^2} \frac{d^2}{df_x^2} \left[H_{bx}(f_x)\, H_{rx}(f_x) \right]$$

$$+ 2c_x \left| H_{bx}(f_x) \right|^2 H_{rx}(f_x)$$

$$- \frac{\Lambda_{2x}}{2\pi^2 x_s^2} \frac{d^2}{df_x^2} H_{rx}(f_x) + 2d_x H_{rx}(f_x)$$

$$+ \left[2\Lambda_{1x} \left| H_{bx}(f_x) \right|^2 + 2\Lambda_{3x}\, \Phi_{nnx}(f_x) \right] H_{rx}(f_x) = 0, \qquad \text{(C2)}$$

or,

$$\nabla I_x = -\frac{H_{bx}^*(f_x)}{2\pi^2 x_w^2}\left[H_{bx}''(f_x)\,H_{rx}(f_x) + 2H_{bx}'(f_x)\,H_{rx}'(f_x) + H_{bx}(f_x)\,H_{rx}''(f_x)\right] - \frac{\Lambda_{2x}}{2\pi^2 x_s^2}\,H_{rx}''(f_x)$$

$$+ \left[2(c_x + \Lambda_{1x})\,\left|H_{bx}(f_x)\right|^2 + 2\Lambda_{3x}\,\Phi_{nnx}(f_x) + 2d_x\right] H_{rx}(f_x) = 0, \quad \text{(C3)}$$

$$\nabla I_x = -\left[\frac{\left|H_{bx}(f_x)\right|^2}{2\pi^2 x_w^2} + \frac{\Lambda_{2x}}{2\pi^2 x_s^2}\right] H_{rx}''(f_x)$$

$$- \frac{H_{bx}^*(f_x)\,H_{bx}'(f_x)}{\pi^2 x_w^2}\,H_{rx}'(f_x)$$

$$- \left[\frac{H_{bx}^*(f_x)\,H_{bx}''(f_x)}{2\pi^2 x_w^2} - 2(c_x + \Lambda_{1x})\left|H_{bx}(f_x)\right|^2 + 2\Lambda_{3x}\,\Phi_{nnx}(f_x) + 2d_x\right] H_{rx}(f_x) = 0, \quad \text{(C4)}$$

$$\nabla I_x = -\left[\frac{\left|H_{bx}(f_x)\right|^2 x_s^2 + \Lambda_{2x} x_w^2}{2\pi^2 x_w^2 x_s^2}\right] H_{rx}''(f_x)$$

$$- \frac{H_{bx}^*(f_x)\,H_{bx}'(f_x)}{\pi^2 x_w^2}\,H_{rx}'(f_x)$$

$$- \frac{\left[H_{bx}^*(f_x)\,H_{bx}''(f_x) - 4\pi^2 x_w^2\left\{(c_x + \Lambda_{1x})\,\left|H_{bx}(f_x)\right|^2 + \Lambda_{3x}\,\Phi_{nnx}(f_x) + d_x\right\}\right]}{2\pi^2 x_w^2}$$

$$\cdot\, H_{rx}(f_x) = 0, \quad \text{(C5)}$$

or in normalized form,

$$\nabla I_x = H_{rx}''(f_x) + \frac{2H_{bx}^*(f_x)\, H_{bx}'(f_x)\, x_s^2}{|H_{bx}(f_x)|^2\, x_s^2 + \Lambda_{2x} x_w^2}\, H_{rx}'(f_x)$$

$$+ \frac{\left[H_{bx}^*(f_x)\, H_{bx}''(f_x) x_s^2 - 4\pi^2 x_w^2 x_s^2 \{(c_x + \Lambda_{1x})|H_{bx}(f_x)|^2 + \Lambda_{3x}\Phi_{nnx}(f_x) + d_x\}\right]}{|H_{bx}(f_x)|^2\, x_s^2 + \Lambda_{2x}\, x_w^2}$$

$$\cdot\, H_{rx}(f_x) = 0 \,. \qquad \text{(C6)}$$

APPENDIX D - DERIVATION OF EQUATION 69

From Eq. 32, 39g, and 52,

$$K_{2x} = -\frac{1}{4\pi^2 x_s^2} \iint_{-\infty}^{\infty} \delta''(f_x - \nu_x)\, H_{rx}^*(f_x)\, H_{rx}(\nu_x)\, d\nu_x\, df_x$$

$$+ d_x \iint_{-\infty}^{\infty} \delta(f_x - \nu_x)\, H_{rx}^*(f_x)\, H_{rx}(\nu_x)\, d\nu_x\, df_x \tag{D1}$$

$$= -\frac{1}{4\pi^2 x_s^2} \int_{-\infty}^{\infty} H_{rx}^*(f_x)\, H_{rx}''(f_x)\, df_x$$

$$+ d_x \int_{\infty}^{\infty} |H_{rx}(f_x)|^2\, df_x\,. \tag{D2}$$

From Eq. 69b,

$$H_{rx}''(f_x) = H_{rrx}''(f_x) + j\, H_{rix}''(f_x) \tag{D3}$$

and

$$H_{rx}^*(f_x) = H_{rrx}(f_x) - j\, H_{rix}(f_x)\,. \tag{D4}$$

From Eq. D3 and D4,

$$H_{rx}''(f_x)\, H_{rx}^*(f_x) = H_{rrx}''(f_x)\, H_{rrx}(f_x)$$

$$+ H_{rix}''(f_x)\, H_{rix}(f_x) + j\, [H_{rix}''(f_x)\, H_{rrx}(f_x)$$

$$- H_{rix}''(f_x)\, H_{rix}(f_x)\,]. \tag{D5}$$

Substituting Eq. D5 into D2,

$$K_{2x} = -\frac{1}{4\pi^2 x_s^{\,2}} \left[\int_{-\infty}^{\infty} \left\{ H''_{rrx}(f_x)\, H_{rrx}(f_x) + H''_{rix}(f_x)\, H_{rix}(f_x) \right\} df_x \right.$$

$$\left. + j \int_{-\infty}^{\infty} \left\{ H''_{rix}(f_x)\, H_{rrx}(f_x) - H''_{rrx}(f_x)\, H_{rix}(f_x) \right\} df_x \right]$$

$$+ d_x \int_{-\infty}^{\infty} |H_{rx}(f_x)|^2 \; df_x \; . \qquad \text{(D6)}$$

Since $h_{rx}(x)$ is assumed to be a real function, then

$H''_{rrx}\,(f_x)$ is an even function

and

$H''_{rix}(f_x)$ is an odd function.

Thus, the second integral in Eq. D6 is zero, and

$$K_{2x} = -\frac{1}{4\pi^2 x_s^{\,2}} \int_{\infty}^{\infty} [H''_{rrx}(f_x)\, H_{rrx}(f_x) + H''_{rix}(f_x)\, H_{rix}(f_x)]\, df_x$$

$$+ d_x \int_{\infty}^{\infty} |H_{rx}(f_x)|^2 \, df_x \; . \qquad \text{(D7)}$$