N73-26671

NATIONAL AERONAUTICS AND SPACE ADMINISTRATION

Technical Memorandum 33-629

Preliminary Nuclear Electric Propulsion (NEP) Reliability Study

T. M. Hsieh

A. M. Nakashima

J. F. Mondt

(NASA-CR-133233) PRELIMINARY NUCLEAR ELECTRIC PROPULSION (NEP) RELIABILITY STUDY (Jet Propulsion Lab.) 22 p HC $3.25 CSCL 21C

N73-26671

Unclas

G3/22 08274

JET PROPULSION LABORATORY

CALIFORNIA INSTITUTE OF TECHNOLOGY

PASADENA, CALIFORNIA

July 1, 1973

NATIONAL AERONAUTICS AND SPACE ADMINISTRATION

Technical Memorandum 33-629

Preliminary Nuclear Electric Propulsion (NEP) Reliability Study

T. M. Hsieh
A. M. Nakashima
J. F. Mondt

JET PROPULSION LABORATORY
CALIFORNIA INSTITUTE OF TECHNOLOGY
PASADENA, CALIFORNIA

July 1, 1973

PRECEDING PAGE BLANK NOT FILMED

PREFACE

The work described in this report was performed by the Propulsion Division of the Jet Propulsion Laboratory.

PRECEDING PAGE BLANK NOT FILMED

CONTENTS

I. System Reliability Analysis 1

II. Preliminary Failure Mode, Failure Effect, and Criticality Analysis and Reliability Block Diagrams of NEP System 3

A. System Definition 5

B. Classification of Criticality 5

C. Reactor Subsystem 5

D. Thrust Subsystem 6

E. Heat Rejection Subsystem 6

III. Reliability Modeling and Computer Program 9

A. Reliability Modeling 9

B. Reliability Computer Program 12

IV. Approach to NEP System Reliability Computation 13

A. Definition of Success of Mission 13

B. Mean-Time to Failure 13

C. Variance Analysis and Reliability Engineer 14

References 16

TABLES

1. Arbitrary reliability allocation of NEP system 4

2. FMECA of reactor subsystem. 7

3. FMECA of thrust subsystem 8

4. FMECA of heat rejection subsystem 10

5. Reliability of the heat rejection subsystem 14

CONTENTS (contd)

FIGURES

1. Reliability analysis block diagram 17

2. Reliability of a system as a function of varying numbers of components (from Ref. 11). 18

3. NEP system/spacecraft, side thrust concept 19

4. Reliability block diagram of reactor subsystem. 20

5. Reliability block diagram of thrust subsystem. 21

6. Reliability block diagram of heat rejection subsystem. . . 22

ABSTRACT

A preliminary failure mode, failure effect, and criticality analysis (FMECA) of the major subsystems of nuclear electric propulsion (NEP) is presented. Simplified reliability block diagrams (RBDs) are also given. A computer program, developed at JPL, was used to calculate the reliability of the heat rejection subsystem.

I. SYSTEM RELIABILITY ANALYSIS

The reliability of a system is the probability that it can successfully fulfill its intended mission in a given time when operated under specified conditions. The objective of reliability analysis is to help make this probability of success as large as possible, within the limitations imposed by weight and cost. Two opposite approaches (forward and backward) to reliability analysis may be applied. In the forward approach, an overall system reliability goal is established. Subsystem and component reliabilities are allocated accordingly and expanded into a reliability tree. The salient feature of this forward approach is that engineering design must meet stringent reliability requirements, which, of course, implies stringent requirements on specifications, materials, and the quality of engineering technology. Since all reasonable programs are cost-constrained, however, it is often unrealistic to insist on achieving a reliability objective set for a particular component or subsystem.

In the backward approach, the reliability of each component is estimated based on available performance data and engineering judgment. This gives a realistic estimation of the reliability which can be achieved for a certain component. Unacceptably low reliability components are identified, and efforts to improve these components can then be implemented. In case of insufficient data to estimate component reliability, an acceptable reliability can be specified. Then that component is designed and developed to the specified reliability.

Reliability analysis contributes significantly to system reliability through the process of identifying sources and causes of unreliability and subsequent design modifications. Reliability analysis should begin right after the proposed design starts. Some problems can be eliminated before they arise, and some can even be solved at an early stage when design

modification can be made without causing large increases in cost. Negligence of the importance of early reliability analysis will probably cause extraordinary, high cost efforts later.

A simplified block diagram of reliability analysis during the design phase is shown in Fig. 1.

As soon as the proposed design is conceived, the reliability engineer should start reliability analysis. He can study the failure modes and effects of each component, analyze the criticality of each failure mode, and then make overall reliability computations. The information required by the reliability engineer must come either from test results of the designed component or a similar component used on previous missions.

Failure mode and effect analysis is the procedure for considering, qualitatively, different failure modes during operation of components and the effects these failure modes have on other components, subsystems, or system operation and, hence, on mission success. At this stage, modes of failure of lower-level elements are identified and their effects on the components noted. The likelihood of component failure and the mode of failure are inputs to the reliability prediction logic model. Experience with the components during developmental testing, or experience with similar components in other applications, provides the basis for evaluating the likelihood of failure in various modes of operation. Great care must be exercised to be sure that all possible failure modes and effects are identified and described. Some failure modes result from simultaneous failure of more than one component and must also be included in the analysis.

Criticality analysis is a quantitative procedure of identifying the catastrophic failure mode and estimating the degree of severity by considering failure data, failure mode frequency ratio, and environmental stress factors. A number, preferably in failures per million hours, is thus obtained for the critical part or component from which the system reliability is calculated.

Reliability computations of the system can be made from knowledge of the behavior of the components. The computed reliability of the system may suggest that either a redesign or a more refined and updated analysis technique is required. Another technique would be to increase reliability of a part or component by truncating material strength distribution or application

stress distribution or both through proof load and material test. The truncation eliminates some potential failures and hence increases the reliability (Ref. 1). Physical constraints, costs, schedules, and parametric trade studies become important considerations in this process. If the reliability requirement for a system greatly exceeds the predicted value, an entirely different design concept, functional approach, or redundancy scheme may then be examined. In selection among alternatives to achieve a given level of reliability, the cost must be kept at a minimum. Examination of different schemes should be repeated until there is no great difference between predicted and required reliability and the cost is minimum.

One important aspect of reliability analysis during the design phase is that the reliability analysis should serve as a tool of parameter study for component/subsystem tradeoffs. Regarding thermionic converter networks, for example, reliability is one of the most important parameters to be considered in selecting series-parallel connections.

Emphasis here is placed on failure modes and effects analysis. For each of the major subsystems of nuclear electric propulsion (NEP), a failure mode and effect and criticality analysis (FMECA) and greatly simplified reliability block diagrams (RBDs) are given. Detailed and sophisticated FMECA and RBD are impossible at this stage.

To estimate NEP system reliability, arbitrary reliability figures for NEP subsystems were assigned, and system reliability was computed as shown in Table 1. The overall reliabilities obtained seem low. It is clear from Fig. 2 that any system with more than a few components in series has a low reliability unless each of the series component reliabilities is in the range of 0.995 or greater.

II. PRELIMINARY FAILURE MODE, FAILURE EFFECT, AND CRITICALITY ANALYSIS AND RELIABILITY BLOCK DIAGRAMS OF NEP SYSTEM

A preliminary failure mode, failure effect, and criticality analysis (FMECA) is given in this section. A reliability block diagram (RBD) for each of the subsystems is also included. A quantitative criticality analysis should be implemented whenever sufficient failure data, failure mode frequency ratio, and environmental stress factors are available.

Table 1. Arbitrary reliability allocation of NEP system

Control subsystem	.9900	.9500	.9000	.8000	.6000	.8500	.8500	.8500	.8500	.8500	.8500	.8500	.8500	.8500	.8500
NEP/spacecraft interfaces	.9950	.9747	.9487	.8944	.7746	.9220	.9220	.9220	.9220	.9220	.9220	.9220	.9220	.9220	.9220
NEP/Centaur/shuttle interfaces	.9950	.9747	.9487	.8944	.7746	.9220	.9220	.9220	.9220	.9220	.9220	.9220	.9220	.9220	.9220
Structure subsystem	.9900	.9900	.9900	.9900	.9900	.9900	.9900	.9900	.9900	.9900	.9900	.9900	.9900	.9900	.9900
Stage adapter	.9967	.9967	.9967	.9967	.9967	.9967	.9967	.9967	.9967	.9967	.9967	.9967	.9967	.9967	.9967
Flight structure	.9967	.9967	.9967	.9967	.9967	.9967	.9967	.9967	.9967	.9967	.9967	.9967	.9967	.9967	.9967
Deployment mechanisms	.9967	.9967	.9967	.9967	.9967	.9967	.9967	.9967	.9967	.9967	.9967	.9967	.9967	.9967	.9967
Power subsystem	.9900	.9500	.9000	.8000	.6000	.9900	.9500	.9000	.8500	.8000	.7000	.9500	.9000	.8500	.8000
Thermionic reactor	.9950	.9747	.9487	.8944	.7746	.9950	.9747	.9487	.9220	.8944	.8367	.9747	.9487	.9220	.8944
Reactor control	.9990	.9949	.9895	.9779	.9502	.9990	.9949	.9895	.9839	.9779	.9650	.9949	.9895	.9839	.9779
TFE	.9990	.9949	.9895	.9779	.9502	.9990	.9949	.9895	.9839	.9779	.9650	.9949	.9895	.9839	.9779
Reactor components	.9990	.9949	.9895	.9779	.9502	.9990	.9949	.9895	.9839	.9779	.9650	.9949	.9895	.9839	.9779
Vessel and internal structure	.9990	.9949	.9895	.9779	.9502	.9990	.9949	.9895	.9839	.9779	.9650	.9949	.9895	.9839	.9779
Electrical buses	.9990	.9949	.9895	.9779	.9502	.9990	.9949	.9895	.9839	.9779	.9650	.9949	.9895	.9839	.9779
Heat rejection subsystem	.9950	.9747	.9487	.8944	.7746	.9950	.9747	.9487	.9220	.8944	.8367	.9747	.9487	.9220	.8944
Primary loop	.9983	.9915	.9826	.9635	.9184	.9983	.9915	.9826	.9733	.9635	.9423	.9915	.9826	.9733	.9635
Heat pipe radiator	.9983	.9915	.9826	.9635	.9184	.9983	.9915	.9826	.9733	.9635	.9423	.9915	.9826	.9733	.9635
Thermal insulation	.9983	.9915	.9826	.9635	.9184	.9983	.9915	.9826	.9733	.9635	.9423	.9915	.9826	.9733	.9635
Thrust subsystem	.9900	.9500	.9000	.8000	.6000	.9900	.9900	.9900	.9900	.9900	.9900	.9500	.9000	.8500	.8000
Power conditioners	.9980	.9898	.9791	.9564	.9029	.9980	.9980	.9980	.9980	.9980	.9980	.9898	.9791	.9680	.9564
Thrust vector control	.9980	.9898	.9791	.9564	.9029	.9980	.9980	.9980	.9980	.9980	.9980	.9898	.9791	.9680	.9564
Thrusters	.9980	.9898	.9791	.9564	.9029	.9980	.9980	.9980	.9980	.9980	.9980	.9898	.9791	.9680	.9564
Cabling	.9980	.9898	.9791	.9564	.9029	.9980	.9980	.9980	.9980	.9980	.9980	.9898	.9791	.9680	.9564
Attitude control	.9980	.9898	.9791	.9564	.9029	.9980	.9980	.9980	.9980	.9980	.9980	.9898	.9791	.9680	.9564
Propellant subsystem	.9900	.9500	.9000	.8000	.6000	.9900	.9900	.9900	.9900	.9900	.9900	.9900	.9900	.9900	.9900
Mercury	.9967	.9830	.9655	.9283	.8434	.9967	.9967	.9967	.9967	.9967	.9967	.9967	.9967	.9967	.9967
Tanks	.9967	.9830	.9655	.9283	.8434	.9967	.9967	.9967	.9967	.9967	.9967	.9967	.9967	.9967	.9967
Feed system	.9967	.9830	.9655	.9283	.8434	.9967	.9967	.9967	.9967	.9967	.9967	.9967	.9967	.9967	.9967
NEP system (calculated)	.9510	.8064	.6495	.4055	.1283	.8165	.7835	.7423	.7010	.6598	.5773	.7519	.6748	.6019	.5332

A. System Definition

The reference NEP system/spacecraft is of side-thrust configuration and is shown in Fig. 3. The NEP system consists mainly of a thrust subsystem and a power subsystem. The power subsystem consists mainly of a 120-kWe, 20,000 equivalent full power hours (EFPH) thermionic reactor, a heat-rejection subsystem, and a nuclear shield. The thrust subsystem consists mainly of 18 30-cm ion thrusters and 36 power conditioning units. (The number of components and other data given here are for reference purposes and do not imply a final design.)

B. Classification of Criticality

At this stage, only qualitative criticality analysis is possible. The criticality of a component is classified according to the following criteria:

Class I: Catastrophic failure of the NEP system occurs in a relatively short time. If this critical failure mode of a component takes place, the mission is impossible to accomplish.

Class II: Performance characteristics of the subsystem and/or system may be changed. If sufficient redundancy is available or degradation of performance is not significant, the mission can still be completely successful. If performance degradation is within certain limits, the mission may be achieved partially.

Class III: Effect on system and/or the mission is small and negligible; performance may degrade but not below design value.

C. Reactor Subsystem

The reactor subsystem is composed of a thermionic reactor and its auxiliary control elements, a LiH neutron shield, and miscellaneous structures. The reactor consists of 162 thermionic fuel elements (TFEs), arranged in six full hexagonal rings with six additional TFEs per side in the

seventh ring and 18 radial reflectors which are movable in pairs by nine stepping motors. Each TFE consists of six series-connected flashlight converters sharing a common cesium reservoir and an electrical heater. The emitter is of tungsten and operates at about 1900 K. The collector is of niobium and operates at about 1100 K. The converter efficiency is about 11%. The coolant, NaK, enters the core at 975 K and leaves the core at 1075 K, carrying the waste heat to the heat rejection subsystem. Neutron detectors and ion chambers are used to measure the neutron flux and the power level and feed signals to the automatic control mechanism. The reactivity is controlled by the rotation of the radial reflector drums, which are made of BeO. Each pair of the reflectors is to be driven by one motor. The design maximum thermal power plant output is 1840 kWe. A single TFE is expected to produce 800-1000 kWe at 5.5-6 V. The total reactor lifetime is expected to be more than 50,000 h.

Table 2 presents the preliminary FMECA of the reactor subsystem; Fig. 4 shows its RBD. Note in Fig. 4 that some blocks should be expanded into more detail whenever the detailed design is consolidated.

D. Thrust Subsystem

The thrust subsystem is composed of 18 30-cm-diameter mercury electron bombardment ion thrusters, 36 power conditioning units (PCU) to convert the power output from the thermionic reactor into suitable power for the thrusters, eight gimbal actuators, and two translator actuators with carriage and translator rods, one thruster array structure (TAS) for mounting the ion thrusters, two propellant (Hg) storage tanks which also serve a major role as gamma radiation shielding, and the auxiliary propellant-feed system components. Some of the thrusters are provided as active standby such that partial failure is allowed to occur without loss of the thrust or thrust vector control capability.

The FMECA of the thrust subsystem is given in Table 3; the RBD is shown in Fig. 5. Again, some blocks should be expanded when detailed design is available.

E. Heat Rejection Subsystem

The heat rejection subsystem is a large and important part of the propulsion system which justifies a separate FMECA. First, any

Table 2. FMECA of reactor subsystem

Component	Function	Failure modes	Failure effects	Criticality
Reactor vessel	Integrating framework of the entire thermionic reactor	(a) Weld failure. (b) Corrosion or deterioration of vessel material. (c) Seal failure at TFE penetrations in vessel head.	(a) Loss of coolant in the core leading to melting down of the reactor or shutdown of the power plant. (b) Same effect as (a) or no effect at all if corrosion within tolerance. (c) Same as (a).	(a) Class I. (b) Class III. (c) Class I.
Thermionic fuel element (TFE)	Electrical power source for the entire system; confinement of fission products and vent path for fission gas.	(a) Fuel swelling. (b) Emitter/collector insulator breakdown. (c) Sheath or cladding mechanical failure. (d) Open circuit of internal series connections.	(a) Spacing between emitter and collector distorted; emitter, collector and local coolant temperature may rise, but within tolerance. (b) Converter short circuit, loss of partial power of a TFE. (c) Local coolant temperature rising, deteriorating the cell. (d) Loss of 1/2 power of one TFE.	(a) Class III. (b) Class II. (c) Class II. (d) Class II.
Radial reflector drum and control mechanism	Lockout of the reflectors, keeping the reactor subcritical during launching; moving the reflector drums to change the neutron leakage rate and to control the reactivity of the reactor.	(a) Spiral spring or locking device failure. (b) Electrical wiring failure in the stepper motor. (c) Bearing failure. (d) Shaft fracture.	(a) Unsafe for launching; spiral spring failure after launch affecting the control of the reactor. (b) The reflector scramming outward away from the core during the startup phase; loss of reactivity control after startup. (c) Degradation of performance of reflector control. (d) Loss of control on one pair of reflectors.	(a) Class I, or II. (b) Class I or II. (c), (d) Class II. Note: Severe environments - high temperature and high radiation.
Neutron detector, ion chamber and other instruments	Feeding necessary signals to control mechanism for starting up and controlling of reactor power level.	Electrical malfunction or damage.	Loss of power level control.	Class II or I.
Cesium reservoir and heater, cesium passage	Maintaining optimal operating condition for converter.	(a) Meteoroid puncture of the cesium reservoir. (b) Heater breakdown. (c) Blockage or leakage of cesium path.	(a) Loss of cesium and (b). (b) Degradation of performance of converter. (c) Same as (a) and (b).	(a) (b) (c) Class II.
Fission gas vent and storage chamber	Venting of the fission gas in the fuel element to alleviate fuel swelling; confinement of fission gas in the storage chamber	(a) Blockage of fission gas path. (b) Meteoroid puncture damage on fission gas storage chamber or other kind of leakage.	(a) Excessive fuel swelling, degrading performance of converter. (b) On-board radiation environment worsening.	(a) (b) Class II.
Low-voltage cable	Connecting fuel element electrical outputs to power processors	(a) Insulator breakdown. (b) Fracture of cable.	(a) Short circuit. (b) Open circuit.	(a), (b) Class II.
Auxiliary power conditioner	Supplying necessary electrical power to power subsystem such as reactor control, cesium heater, etc.	(a) Transformer over-heat. (b) Wire failure.	(a) Auxiliary power conditioner performance. (b) Performance degradation, reactor control; power plant shutdown.	(a) Class II. (b) Class II or I.
LiH shield	Reducing the integrated neutron flux to an acceptable level to the science instrument.	(a) Excessive neutron- and gamma-induced heating. (b) Crack or void in the shield. (c) Meteoroid puncture.	(a) Thermal stress. (b) Increasing hydrogen evolution neutron flux at payload. (c) Mission failure.	(a) Class III. (b) Class II. (c) Class I.
Batteries	Supplying the startup power for the reactor.	Open or short circuit.	Prevent startup of the power plant.	Class I.

Table 3. FMECA of thrust subsystem

Component	Function	Failure modes	Failure effects	Criticality
Thruster	Providing thrust power to the spacecraft at high specific impulse.	(a) Grid wearout; depletion of the cathode emissive material. (b) Restart failure. (c) Short circuit.	(a) Reducing specific impulse. (b) Loss of thrusting power. (c) Power transient propagating to power conditioners.	(a) Class II. (b) Class II or I. (c) Class II.
Thrust vector control mechanism	Providing translational and rotational direction control of the spacecraft.	(a) Failure of a gimbal actuator. (b) Failure of a translator actuator	(a) (b) Gimbal and translational motion are redundant such that the resultant thrust vector coincides with the center of gravity of the spacecraft.	(a) Class II. (b) Class II. *If (a) (b) occurs simultaneously it would be a catastrophic failure and should be classified as I.
Inverter	Converting dc power output from TFE to ac for power conditioning.	(a) Transistor damage by meteoroid puncture. (b) Performance drifting	(a) (b) Performance degradation; loss of one TFE string.	(a) (b) Class II.
Main power conditioner	Supplying necessary electrical power to the thruster such as beam power, arc power, etc.	(a) Transformer overheat, short or open circuit, insulation breakdown, arc. (b) Wire failure. (c) Meteoroid puncture.	(a) (b) PC performance degradation. (c) Loss of fraction of power capability.	(a) (b) Class II. (c) Class II.
Power conditioner radiator	(a) Rejecting the heat generated in the power conditioner and maintaining desired operating temperature in the PCU. (b) Primary meteoroid shielding for PC electronics.	(a) Dislocation or reduction of unshaded panel surface area for heat rejection. (b) Large meteoroid puncture.	(a) (b) Performance degradation of PCU.	(a) (b) Class II.
High-voltage electrical busbar	(a) Charged partical shielding for PC electronics; supplying necessary electrical power to the thruster screen grids.	Open circuit.	Equivalent to that particular thruster failure.	Class II.
Mercury tank and feed system	(a) Supplying mercury to the thruster. (b) Maintain spacecraft CG. (c) Neutron and gamma shielding.	(a) Leakage. (b) Stoppage of valve, manifold, or others on the feed line. (c) Unbalance use of mercury.	(a) (b) Specific impulse being changed. (c) CG being changed.	(a) (b) Class II or I. (c) Class I (if beyond TVC capability).

loss-of-coolant incident in the reactor core would lead to complete mission failure. Second, severe degradation of a single cell of any TFE due to improper cooling may propagate to other cells and possibly lead to a complete shutdown of the thermionic reactor power plant in a relatively short time.

This subsystem consists of approximately 2500 heat pipes, including necessary redundancy, which are brazed to three NaK coolant headers, an EM pump with dual windings which circulates the NaK coolant, and two accumulators, which compensate for the volumetric change of the coolant due to temperature variations. Each accumulator consists of a gas-pressurized bellow and a concentric passive cylindrical tank which serves as secondary containment such that if any mechanical failure of the bellow occurs, loss of coolant would be prevented by the tank.

The heat rejection subsystem FMECA and RBD are shown in Table 4 and Fig. 6, respectively.

III. RELIABILITY MODELING AND COMPUTER PROGRAM

A. Reliability Modeling

Some basic reliability models (Refs. 3-7) are presented as follows:

(a) n series configuration with constant failure rate λ_i (independent components). The reliability of this configuration is

$$R = \prod_{i=1}^{n} e^{-\lambda_i t}$$

(b) n parallel configuration with constant failure rate λ_i (no switching or perfect switching). The reliability of this configuration is

$$R = 1 - \prod_{i=1}^{n} (1 - e^{-\lambda_i t})$$

Table 4. FMECA of the heat rejection subsystem

Component	Function	Failure modes	Failure effects	Criticality
Heat pipe	Rejecting the waste heat from the thermionic power plant into space.	(a) Flow blockage in wick. (b) Corrosion. (c) Meteoroid puncture. (d) Braze failure. (e) Failure to start up.	(a) Loss of capillary pumping power. (b) (c) (d) Heat rejecting rate decreasing; collector temperature increasing; Converter performance degrading. (e) Heat rejection subsystem inactive.	(a) (b) (c) (d) Class II or III. (e) Class I.
Electromagnetic pump	Providing the coolant circulation pumping power as the flow rate and pressure drop demands.	(a) Electrical failure in the winding and/or insulation. (b) Cavitation in the liquid metal before entering the EM pump.	(a) Loss of pumping power. (b) Overcurrent in the electrical winding.	(a) Class I. (b) Class II or III.
Accumulator	Accommodating the change in coolant volume because of temperature variation.	(a) Bellow leakage. (b) Tank leakage.	(a) Loss of function of coolant expansion compensation or pressurization; performance of thermionic reactor. (b) Loss of gas for pressurization; same effect as (a).	(a) (b) Class II. *If (a) (b) occurs at the same time, Class I.
Header	Supporting structure for heat pipes; carrying NaK and transferring heat to heat pipes by conduction.	(a) Meteoroid puncture. (b) Leakage. (c) Stoppage.	(a) (b) Loss of coolant. (c) Performance of reactor.	(a) (b) Class I. (c) Class II.
Other piping	Transporting the heat rejection loop coolant from the thermionic reactor to the heat pipe radiator.	Weld failure.	Loss of coolant.	Class I.

(c) Two identical units (one standby) with a failure rate λ_0 while operating and λ_d while in dormant state

$$R = e^{-\lambda_0 t} + \frac{\lambda_0}{\lambda_d}\left[e^{-\lambda_0 t} - e^{-(\lambda_0 + \lambda_d)t}\right]$$

(d) n identical and independent units, allowing m unit failure without causing serious degradation

$$R = \sum_{n=m}^{n} \binom{n}{i} e^{-\lambda t}(1 - e^{-\lambda t})^{n-i}$$

Example of application area: heat pipes in heat rejection subsystem.

(e) n-1 standby units which cannot fail until operated and with a switching failure rate λ_s

$$R = \sum_{i=0}^{n-1} \frac{(\lambda t)^i}{i!} e^{-\left[\lambda + (n-1)\lambda_s\right]t}$$

In formulas (a) through (e) it is assumed that the causes of failure are all external to the element and unrelated to previous use. However, if the failure rate should be changing with time, a more flexible distribution, such as a generalized Weibull distribution (Ref. 8), is required.

(f) A configuration with W series of N parallel units supported by M spares in dormancy.

$$R = \frac{(NW\lambda)^M}{(M-1)!}\int_0^t y^{M-1} e^{-NW\lambda y}\left[R_N(t-y)\right]^W dy + 1$$

$$- \frac{(NW\lambda)^M}{(M-1)!}\int_0^t y^{M-1} e^{-NW\lambda y} dy$$

in which y is the time, assuming a gamma distribution, at which the last spare unit has been consumed and RN is the reliability of the N parallel units.

Example of application area of formula (e) and (f): thrusters in the thrust subsystem.

(g) Simulation (Monte Carlo method): an analogous stochastic process to simulate the random failure and wearout failure of a complex system. Example of application area: converter network in the reactor subsystem.

B. Reliability Computer Program

Reliability calculation can be handled by analytical probability theory if the system configuration is not complex in the sense of a reliability block diagram. For calculation of the reliability of a system consisting of a complex combination of dormant and/or active redundancy with imperfect switch function, a computer program has been developed at JPL (Ref. 9). Two computer subroutines are also established to calculate the survival probability of heat pipes and other piping due to meteoroid puncture and the probability of expected number of survivors from "n" identical active redundant elements, respectively.

A reliability block diagram computation program was developed by Chelson and Eckstein at JPL. It is useful in handling active/standby combinations of redundancies, including the effects of imperfect switching in any standby redundancy. As an exemplified application of the program, assume we want to know the reliability of a heat rejection subsystem for a 20,000-h operation, given the failure rates of each component. The reliability of a NEP heat rejection subsystem for a 20,000-h mission is estimated by applying the computer programs. The heat rejection subsystem reliability block diagram is shown in Fig. 6.

The λ's are the element failure rate as the number of failures occurring in one million hours. Block 1 represents the heat pipes of the radiator; 2341 out of 2496 heat pipes must be operating at end of mission (about 6.3% redundancy). The failure rates λ_1 and λ_{14} are calculated based on heat pipe and header meteoroid puncture probability. Blocks 2 and 3 represent two active redundant EM pumps. Blocks 4 through 7 represent two series-of-two

active redundant accumulators (the heat rejection subsystem fails if both in-parallel accumulators fail). Blocks 8 through 13 represent the three headers of the radiator. It is assumed that in one out of three headers NaK coolant flow is allowed to be blocked (flow stoppage but no leaks) without causing mission failure. Block 14 is incorporated separately for the three headers in the reliability block diagram, considering the catastrophic failure mode due to meteoroid puncture. Block 15 represents all the other piping of the subsystem. Failure rates λ_2 through λ_{13} and λ_{15} are estimated (Ref. 10). Equal failure rates are assumed for identical components. Based on the above, the reliability of the heat rejection subsystem is calculated to be 0.99577 for 20,000 h. Table 5 presents part of the computer output; it shows the calculated reliability for each block (which represents the critical function of a component) and the overall subsystem reliability.

IV. APPROACH TO NEP SYSTEM RELIABILITY COMPUTATION

A. Definition of Success of Mission

System reliability computation demands a clear-cut definition of system success. Without this guideline, it is difficult to evaluate the unreliability of subsystems and components. For example, suppose the LiH shielding cracked because of overheating during the mission propulsion phase and allowed higher doses at the science equipment. However, sufficient scientific data was received from the spacecraft to satisfy the mission objectives. Then we can say that the shielding reliability is 1, because the crack did not affect the return of mission data and thus the mission was successful.

B. Mean-Time to Failure

Mean-time to failure (MTTF) for each component is required for computation of reliability of a nonmaintainable system such as NEP. Several failure-rate data sources will provide some of the needed information. In addition, a plan for testing will be required for some elements of subsystems, such as heat pipes, TFE, etc. Tests should be designed to give the best estimate of the reliability of elements. Environmental conditions for all the elements should be specified and used in estimating MTTF for the mission.

Table 5. Reliability of the heat rejection subsystem

	Active F/R	Dormant F/R	R-Initial	Reliability
Block 1	.5000000-10	.0000000		.9999990+000
Block 2	.3000000-06	.0000000		.9940180+000
Block 3	.3000000-06	.0000000		.9940180+000
Block 4	.4000000-07	.0000000		.9992003+000
Block 5	.4000000-07	.0000000		.9992003+000
Block 6	.4000000-07	.0000000		.9992003+000
Block 7	.4000000-07	.0000000		.9992003+000
Block 8	.2100000-06	.0000000		.9958088+000
Block 9	.2100000-06	.0000000		.9958088+000
Block 10	.2100000-06	.0000000		.9958088+000
Block 11	.2100000-06	.0000000		.9958088+000
Block 12	.2100000-06	.0000000		.9958088+000
Block 13	.2100000-06	.0000000		.9958088+000
Block 14	.5500000-10	.0000000		.9999989+000
Block 15	.2100000-06	.0000000		.9958088+000

Reliability of the heat rejection subsystem through 20000. hours = .99577

C. Variance Analysis and Reliability Engineer

If both distributions of the material strength and the stress under various environmental conditions that a component will experience through an entire mission are known, the probability of failure of that component can be calculated. Assume the performance of that component is Y, which relates to n variables X_i, such as temperature, pressure, etc. We can then express the performance of a component as a function of these variables:

$$Y = f(X_1, X_2, \cdots, X_n)$$

and the variance σ^2 as

$$\sigma^2 = \sum_{i=1}^{n} \left(\frac{\partial f}{\partial x_i}\right)^2 \sigma_i^2 + \sum_{\substack{i=1 \\ j=1 \\ i \neq j}}^{n} \rho_{ij} \left(\frac{\partial f}{\partial x_i}\right)\left(\frac{\partial f}{\partial x_j}\right) \sigma_i \sigma_j$$

where σ_i^2 is the variance associated with x_i, and ρ_{ij} is the degree of dependence between variables x_i and x_j (Ref. 11). If the variables are statistically independent, then $\rho_{ij} = 0$.

Through the variance analysis, the variance which contributes most to the unreliability of that component can be determined. Efforts can then be concentrated on work to reduce that particular variance and hence increase the reliability.

In order to have an efficient and realistic estimate of reliability during the design and development phase, the reliability engineer should be involved in design and development testing, and should be informed of any system modifications or change. Through this involvement, he will have an understanding of each component failure mode, its effects and criticality, and a best estimate of NEP system reliability for the entire mission.

REFERENCES

1. Gabriel, D. S., and Helms, I. L., "Nuclear Rocket Engine Program Status - 1970," AIAA Paper No. 70-711, June, 1970.

2. Pieruschka, E., Principles of Reliability, Prentice-Hall, Inc., Englewood Cliffs, N. J., 1963.

3. Jones, H. C., "Reliability Modeling," Proceedings of 1972 Annual Reliability and Maintainability Symposium, San Francisco, Calif., pp. 24-29, Jan. 1972.

4. Reliability Engineering, ARINC Research Corporation, Prentice-Hall, Inc., Englewood Cliffs, N.J., 1964.

5. Technical Investigation D2-22022-21, Section II, The Boeing Co., Seattle, Wash. (an internal document).

6. Shooman, M. L., Probabilistic Reliability - An Engineering Approach, McGraw-Hill, New York, 1968.

7. Sandler, G. H., System Reliability Engineering, Prentice-Hall, Englewood Cliffs, N. J., 1963.

8. Antle, C. E., Choice of Model for Reliability Studies and Related Topics, TR 72-0108, Aerospace Research Laboratories, Wright-Patterson AFB, Aug. 1972.

9. Chelson, P. O., and Eckstein, R. E., Reliability Computation from Reliability Block Diagram, Technical Report 32-1543, Jet Propulsion Laboratory, Pasadena, Calif., Dec. 1, 1971.

10. Study of Low-Acceleration Space Transportation Systems, Report F-910262-20, United Aircraft Research Laboratory, East Hartford, Conn., Oct. 1967.

11. Beers, Y., Introduction to the Theory of Error, Addison-Wesley Publishing Co., Inc., Reading, Mass., 1967.

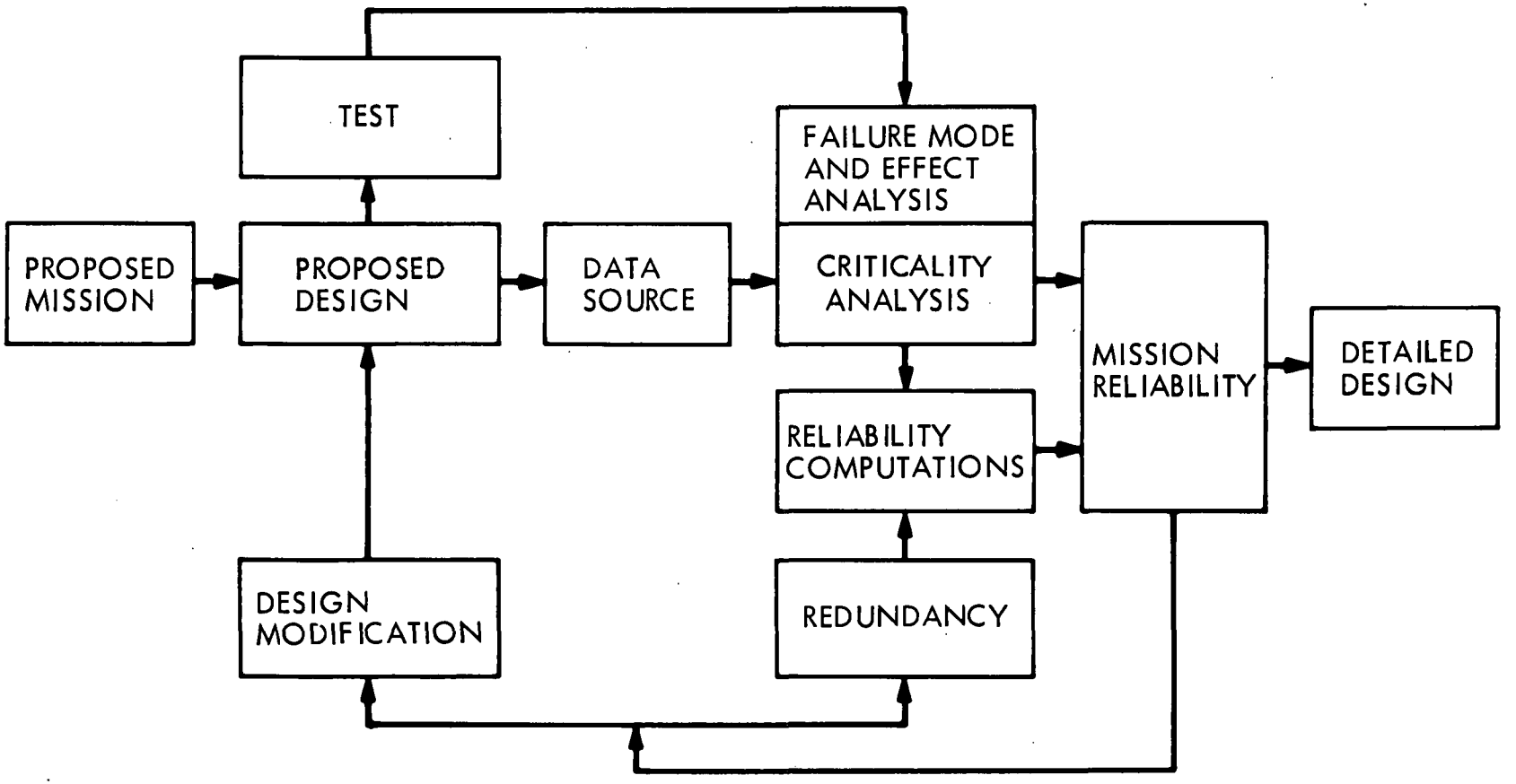

Fig. 1. Reliability analysis block diagram

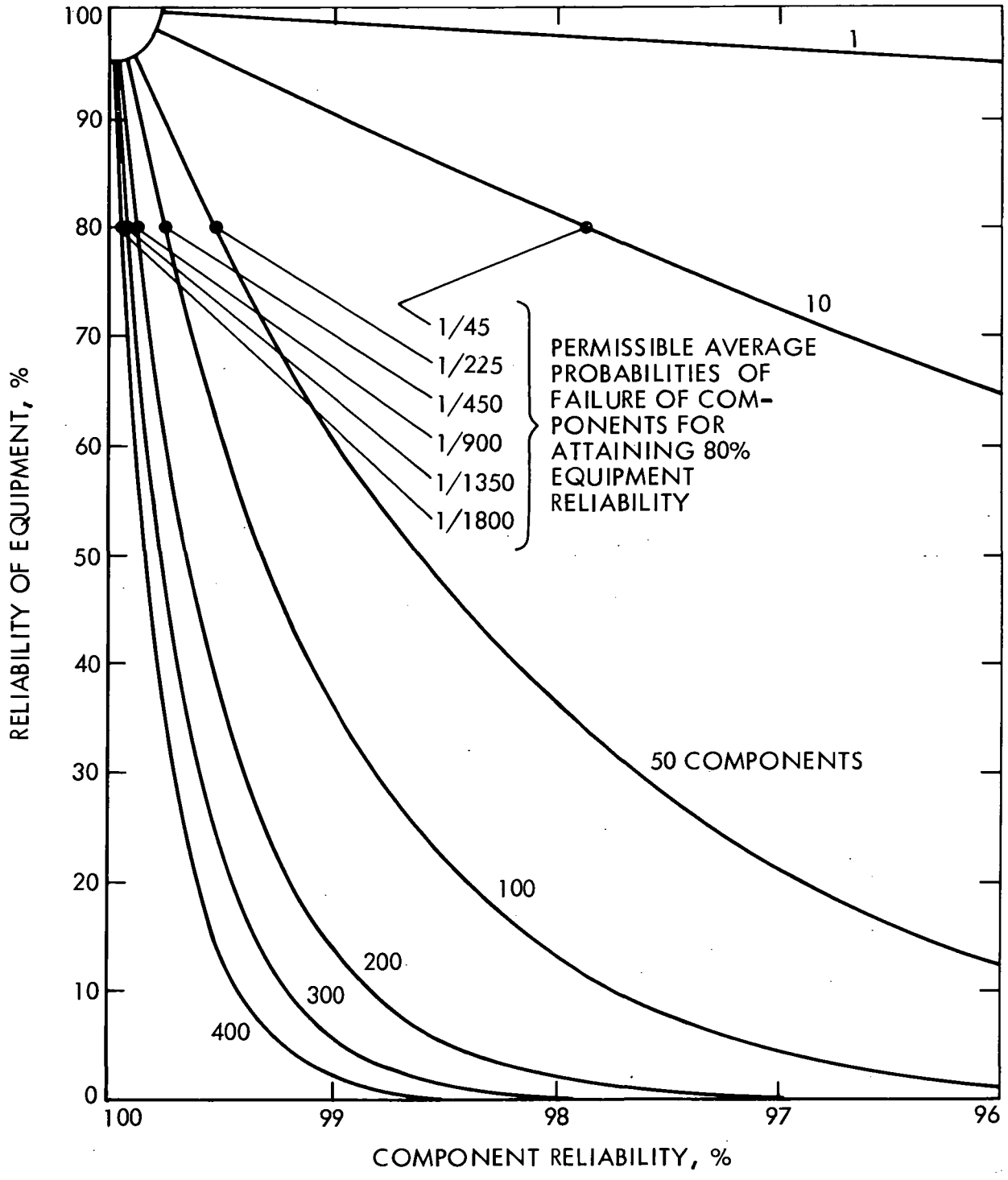

Fig. 2. Reliability of a system as a function of varying numbers of components (from Ref. 11)

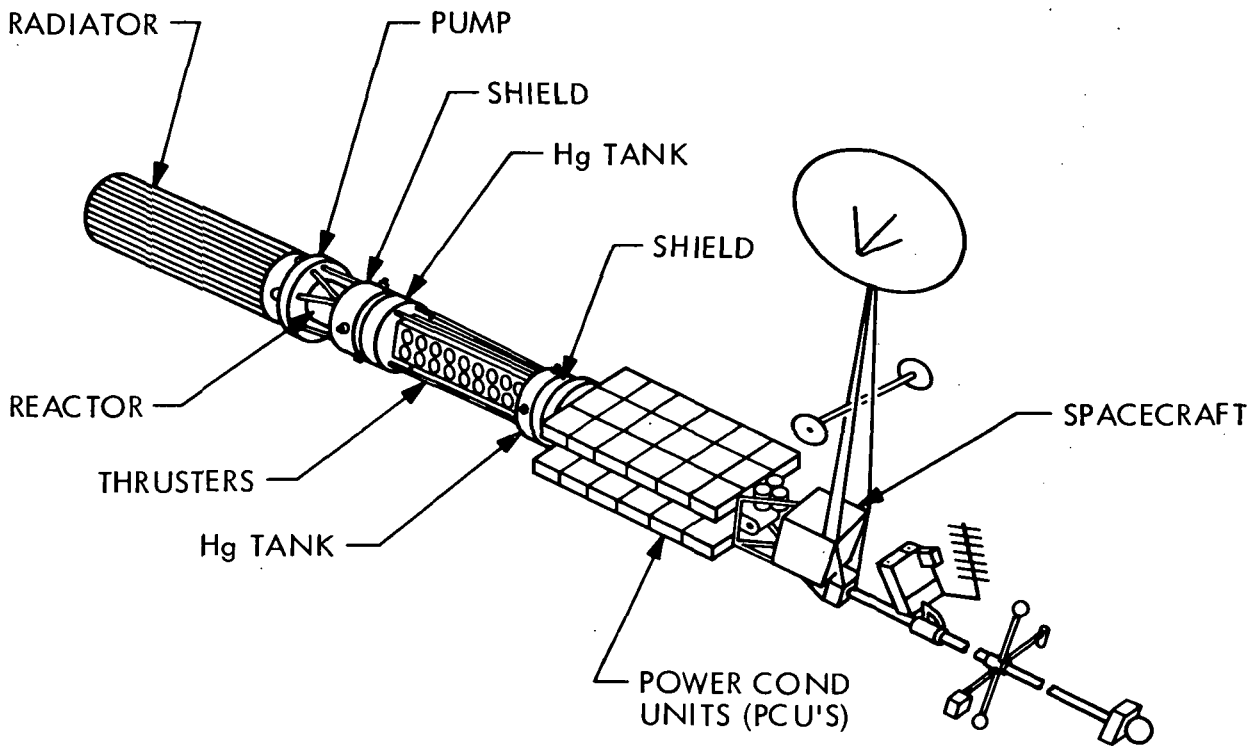

Fig. 3. NEP system/spacecraft, side thrust concept

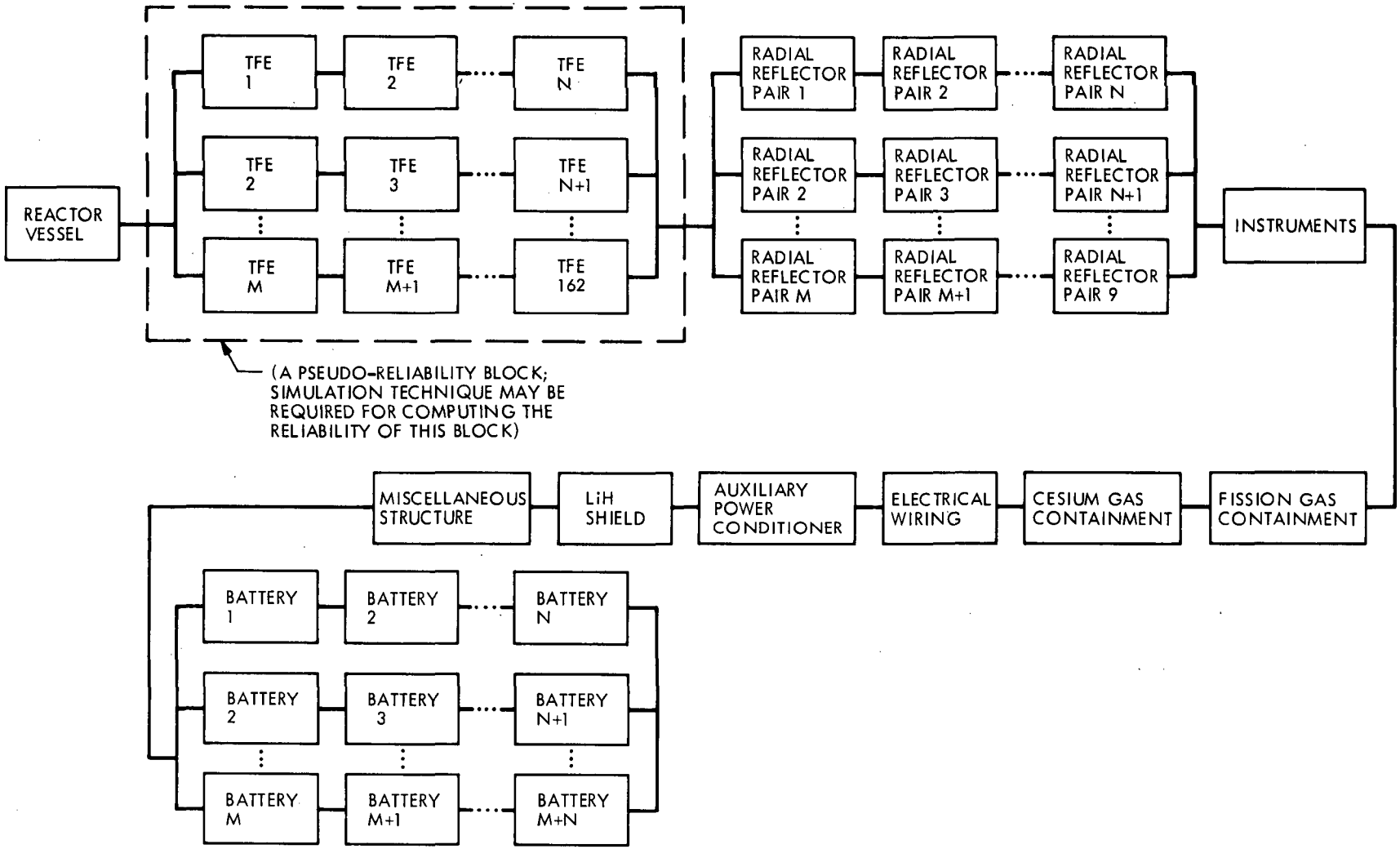

Fig. 4. Reliability block diagram of reactor subsystem

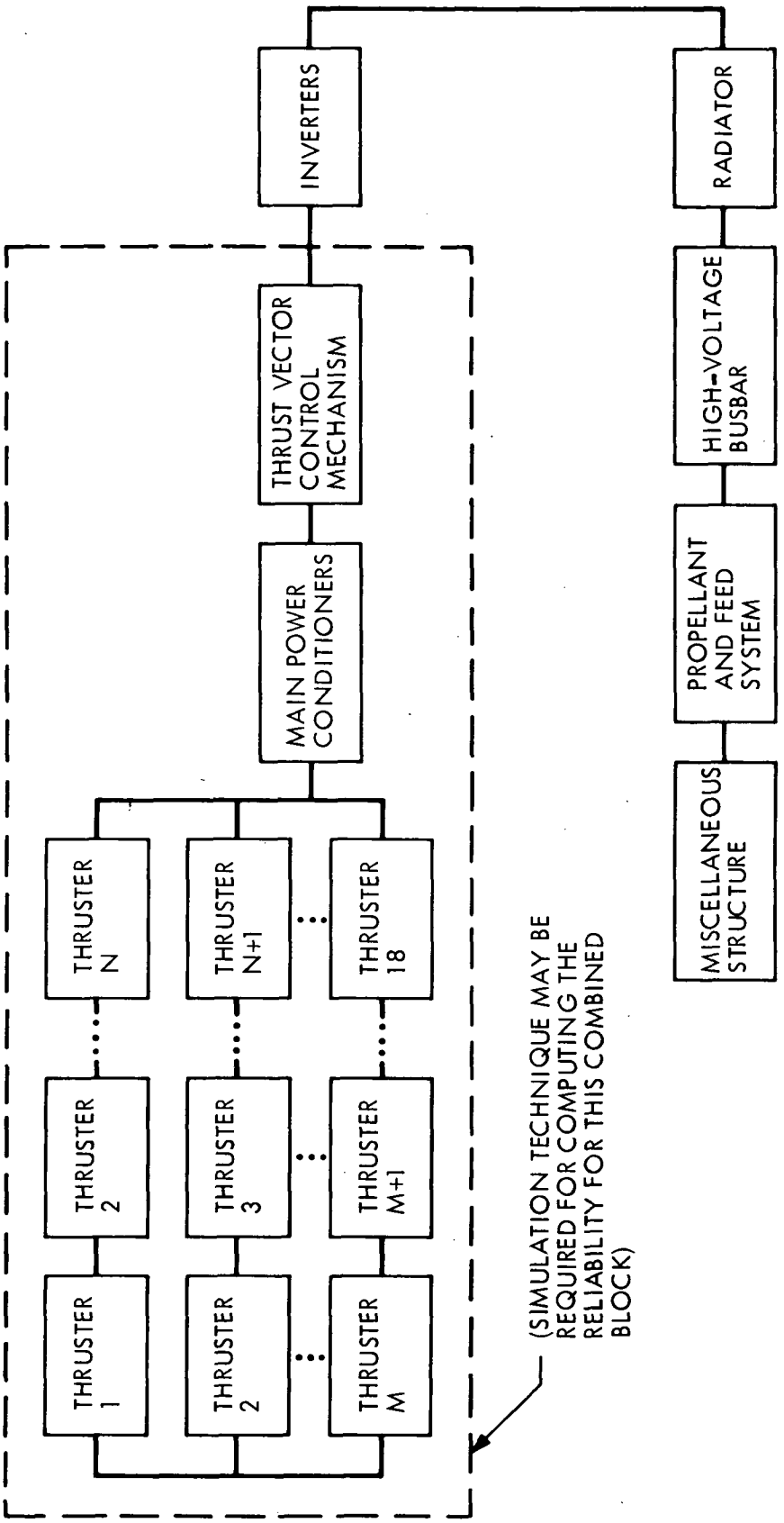

Fig. 5. Reliability block diagram of thrust subsystem

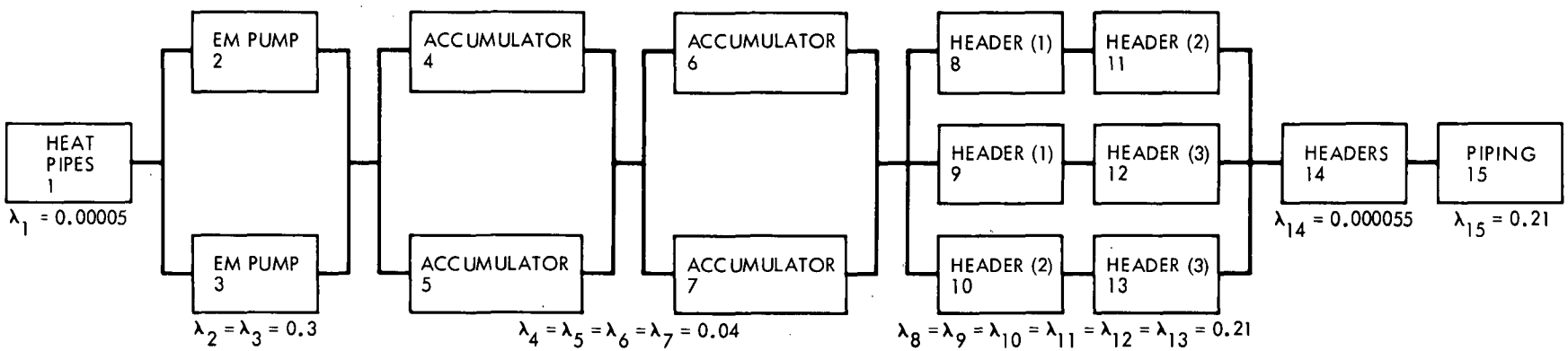

Fig. 6. Reliability block diagram of heat rejection subsystem

NASA — JPL — Coml., L.A., Calif.