N73 29941

NASA TECHNICAL MEMORANDUM

NASA TM X-68285

NASA TM X-68285

CASE FILE COPY

SOME EFFECTS OF EXPERIMENTAL ERROR IN FRACTURE TESTING

by Thomas W. Orange
Lewis Research Center
Cleveland, Ohio 44135

TECHNICAL PAPER proposed for presentation at
Seventh National Symposium on Fracture Mechanics
sponsored by the American Society for Testing and Materials
College Park, Maryland, August 27-29, 1973

E-7621

ABSTRACT

The purpose of this paper is to show the effects of experimental imprecision on the stress intensity factors calculated for various practical specimen types. A general form equation for the stress intensity factor is presented and a general error equation is derived. The expected error in the stress intensity factor is given in terms of the precision levels of the basic experimental measurements and derivatives of the stress intensity calibration factor. Nine common fracture specimen types are considered, and the sensitivity of the various types to experimental error is illustrated. Some implications for fracture toughness testing and crack growth rate testing are discussed and methods of analysis are proposed to compensate for the effects of experimental error.

Some Effects of Experimental Error in Fracture Testing

by
Thomas W. Orange, NASA Lewis Research Center

Proposed for presentation at the
Seventh National Symposium on Fracture Mechanics
University of Maryland, August 27-29, 1973

INTRODUCTION

Scientific experiments, even when carefully controlled, will always contain experimental errors. Prior knowledge of the effects of these errors will allow the proper design of an experiment before it is run. The purpose of this paper is to show the effects of precision errors on the stress intensity factors computed for nine common specimen types.

In most experiments the quantity of interest cannot be measured directly. Rather, other quantities must be measured (often simultaneously) and then combined through some mathematical process. If the process involves only simple functions of the measurements, it is not difficult to compute the expected error in the quantity of interest from the precision levels of the individual measurements. But if the process involves more complicated functions, then the computation is not as simple and the effect of imprecision in any one measurement may be hard to visualize.

In this paper a general form equation for the stress intensity factor is presented and a general error equation is derived. The expected error in the stress intensity factor is given in terms of the expected errors (precision levels) of the measurable constituents and a derivative of the stress intensity calibration factor. Calibration factor expressions for nine common fracture specimen types are collected, tabulated, and differentiated. The sensitivity of the different specimen types to experimental error is illustrated. Some implications for fracture toughness testing and crack growth rate testing are discussed.

ANALYSIS

An expression for the stress intensity factor can be written in a general form as

$$K = Y\sigma\sqrt{a + r} \tag{1}$$

where K = Stress intensity factor

Y = Calibration factor

σ = Nominal applied stress

a = Characteristic crack dimension

r = Plastic zone correction factor

If Irwin's [1] form is taken for the plastic zone correction factor, then

$$r = (K/\sigma_{ys})^2 / n\pi \tag{2}$$

where n is 2 for plane stress or $4\sqrt{2}$ for plane strain and σ_{ys} is the material yield strength.

The expected error in the computed value of the stress intensity factor is

$$E_K = \left|\frac{\partial K}{\partial \sigma}\right| E_\sigma + \left|\frac{\partial K}{\partial \sigma_{ys}}\right| E_{ys} + \left|\frac{\partial K}{\partial a}\right| E_a \tag{3}$$

where E_σ and E_a are the expected errors (precision levels) in the measured values of nominal stress and crack length and E_{ys} is the expected variation of the material yield strength. After substituting Eq. 2 into Eq. 1, performing the required differentiations, and rearranging terms, Eq. 3 becomes

$$\frac{E_K}{K} = \left(1+\frac{r}{a}\right)\frac{E_\sigma}{\sigma} + \left(\frac{r}{a}\right)\frac{E_{ys}}{\sigma_{ys}} + \left|\frac{1}{2} + \left(1+\frac{r}{a}\right)\frac{a}{Y}\frac{\partial Y}{\partial a}\right|\frac{E_a}{a} \tag{4}$$

But a fundamental tenet of applied linear elastic fracture mechanics is that $r \ll a$. Thus the presence of a small plastic zone will have little effect on the precision of a K-calculation (although it may affect the accuracy) and we can write Eq. 4 as

$$E_K/K = E_\sigma/\sigma + \alpha E_a/a \tag{5}$$

where $$\alpha = \left|\frac{1}{2} + \frac{a}{Y}\frac{\partial Y}{\partial a}\right|$$

and α may be considered a crack length sensitivity factor.

It remains to differentiate the calibration factor appropriate to the specimen geometry in question. Calibration factors [2-8] for the nine specimen geometries considered (Fig. 1) are compiled in Table I. They and their claimed ranges of applicability are expressed in terms of λ, the relative crack length (see Fig. 1). Where necessary, the original expressions were rewritten in the form prescribed by Eq. 1 . Calculated values of the crack length sensitivity factor α are plotted in Fig. 2 for six specimen configurations. On this scale, curves for the SENB4 and SENB8 specimens would be almost indistinguishable from that for the SENB specimen.

For the PTC specimen two crack dimensions must be considered, the depth (a) and the half-length (c) of the semiellipse. Thus the terms

$$\left|\frac{\partial K}{\partial c}\right| E_c \qquad \text{and} \qquad \left|\left(1+\frac{r}{a}\right)\frac{c}{Y}\frac{\partial Y}{\partial c}\right| \frac{E_c}{c}$$

must be added to the right sides of Eq. 3 and Eq. 4 respectively. It is reasonable to assume that the error in crack half-length measurement (E_c) will be the same as the error in crack depth measurement (E_a). Then for the PTC

specimen the term α in Eq. 5 can be replaced by

$$\beta = \left|\frac{1}{2} + \frac{a}{Y}\frac{\partial Y}{\partial a}\right| + \frac{a}{c}\left|\frac{c}{Y}\frac{\partial Y}{\partial c}\right|$$

To simplify differentiation, the approximation [9]

$$\Phi^2 \approx 1 + 4.59(a/2c)^{1.65}$$

was used here. Calculated values of the crack dimension sensitivity factor β for the PTC specimen are presented in Fig. 3 .

In cyclic crack propagation testing, a parameter of interest is the stress intensity factor range,

$$\Delta K = K_{max} - K_{min} \approx (\sigma_{max} - \sigma_{min})Y\sqrt{a} \tag{6}$$

If we assume that the maximum and minimum cyclic stresses will both have the same absolute error E_σ , then corresponding to Eq. 5 we have

$$\frac{E_{\Delta K}}{\Delta K} = \frac{2}{1-R}\frac{E_\sigma}{\sigma_{max}} + \alpha\frac{E_a}{a} \tag{7}$$

where $R = \sigma_{min}/\sigma_{max}$

Note that the first term on the right side of Eq. 7 becomes large as R approaches unity. In other words, in a test where the alternating load is small compared with the mean load, ΔK is extremely sensitive to errors in load control and measurement.

DISCUSSION

General Comments

After examining Fig. 2 we can make the following general conclusions regarding the sensitivity of various specimen types to errors in crack length measurement. Sensitivity generally increases with increasing relative crack length. The singletip-crack specimens (SENT, SENB, SENB4, SENB8, CT) are more sensitive than the doubletip-crack specimens (DEN, CC). Specifically, the SENT specimen is the most sensitive specimen of all. The remaining singletip-crack specimens and the NR specimen are less sensitive and all have very nearly the same sensitivity for $\lambda > 0.4$. The DEN specimen is less sensitive than the CC specimen and is the least sensitive of the types so far considered.

The reader should be cautioned that some values of α may not be very accurate at the lowest applicable values of λ. The calibration factor expressions were originally obtained by fitting polynomials to sets of boundary collocation data points. Differentiation of a fitted polynomial often gives highly unsatisfactory slopes, especially near either end of the fitting range. This seems to be especially true for the CT specimen below about $\lambda = 0.4$. At the higher ends of the polynomials' ranges, a slight amount of fairing was used in Fig. 2 to blend the curves derived from polynomials into those derived from extrapolation equations [3,4].

Eq. 5 and Fig. 2 can prove useful in any of the following applications. For given measurement precision levels (E_σ/σ and E_a/a), the expected error E_K/K can be determined for any specimen. This will be done later for the ASTM standard specimens [5]. Or, for any given specimen the effect of changes

in the measurement precision levels can be determined. This in turn could help determine, for example, whether available funds would be better spent on new load cells or on a new optical micrometer.

In the discussion so far it has been tacitly assumed that the expected error in the applied load is unrelated to specimen type and crack length. This is true if the load in question is an independently-defined occurence such as the maximum load. But in some tests (for example, [5]) the load in question is the load corresponding to a given percent crack extension. That load is usually determined by the intersection of the load-COD (crack opening displacement) trace and a secant offset line. The secant offset corresponding to a fixed percent crack extension varies with specimen type and relative crack length. This is discussed in more detail in [2]. In general, the secant offset is larger for the singletip-crack specimens than for the doubletip-crack specimens and increases with the relative crack length. In most practical applications, if the required secant offset becomes too small it may become difficult to achieve the desired load precision level with existing instrumentation.

The PTC Specimen

Discussion of the PTC specimen must be prefaced with a consideration of the calibration factor. At present there is no exact solution for the problem of a semielliptical surface crack in a finite plate. The expression used [8] is a polynomial approximation to curves presented by Kobayashi and Moss [10], which in turn are based on analogy to an earlier approximate solution [11]. Although lacking in rigor, the Kobayashi-Moss estimation is probably adequate for illustrative purposes. The polynomial approximation is a fairly good fit,

it is mathematically tractable, and its derivatives appear reasonable for, say, $\lambda \leq 0.9$.

The sensitivity factor β for the PTC specimen is shown in Fig. 3 . Sensitivity to dimensional measurement error appears to be relatively low and independent of λ for shallow surface cracks, but increases markedly above about $\lambda = 0.7$. Although the analysis is only approximate, the PTC specimen would appear to be inherently more precise than the specimens of Fig. 2 . However, there are many difficulties involved in the application of the PTC specimen, some of which are discussed in [2] and [12].

ASTM Test Method E399-72

This test method is thorough in that it specifies precision levels for every possible measurement, but it does not give the expected error in fracture toughness associated with these precision levels. The error can be calculated using Eq. 5, Fig. 1, and Fig. 2, with one precaution.

The test method allows some misalignment of load, crack, and supports for the bend specimen. If the load and the crack are not in line, an inplane shear (Mode II) loading will be present. This shear load will alter both the crack-tip stress field and the crack mouth displacement. At present there seems to be no adequate analysis for the misaligned bend specimen. But unpublished crack mouth displacement measurements by M.H. Jones and R.T. Bubsey of NASA-Lewis imply that the effect of the allowable misalignment will be quite small. For lack of a proper analysis (but having some experimental justification), errors due to bend specimen misalignment will be neglected.

Based on the precision levels specified in the test method for specimens thicker than 1.0 inch (25 mm), Eq. 5 becomes

$$E_K/K = 0.018 + 0.005\alpha \qquad \text{for the bend specimen}$$

$$E_K/K = 0.012 + 0.005\alpha \qquad \text{for the compact specimen}$$

and these are plotted in Fig. 4. For the dimensions B or W less than 1.0 inch (25 mm), the test method specifies an absolute rather than a percentage precision level. In this case the error in applied stress (E_σ/σ) will increase with decreasing width or thickness and the curves of Fig. 4 will translate upwards. For thick specimens, the maximum error in fracture toughness due only to imprecision of physical measurements will be about 2½ percent for the bend specimen and about 2 percent for the compact specimen. Although there may be other reasons for selecting one specimen over the other, the compact specimen appears to be inherently more precise than the bend specimen, and this was found in [13] to be the case. In two series of "round robin" tests involving about 400 bend and compact specimens of four materials, the reported standard deviations of K_{Ic} ranged from 4.2 to 5.85 percent for bend specimens and from 2.6 to 3.75 percent for compact specimens. The maximum error due to imprecision of physical measurements is not insignificant when compared with these measures of experimental data scatter.

The test method itself does not consider the question of replicate tests. In a smooth tensile test, for example, all replicate data will normally have the same precision, and a simple average is an appropriate characterization. But it is not reasonable to expect that replicate fatigue-cracked fracture specimens will all have exactly the same crack length. If the crack lengths vary, even over the narrow range permitted by the test method, the replicates will not all have the same precision. In this case we want to place the greatest emphasis on the test which is expected to be the most precise, and so a weighted average is called for. A weighted average should give a better

estimate of the true population mean (i.e., K_{Ic}) by accounting for the precision of the individual observations. It is customary [14] to weight each observation inversely proportional to the square of its expected error. If this is done for the fracture specimens, a specimen having $\lambda = 0.45$ will carry about 40 percent (compact specimen) or 26 percent (bend specimen) more weight than a specimen with $\lambda = 0.55$. Or, a compact specimen will have about 78 percent more weight than a bend specimen of the same relative crack length.

Cyclic Crack Propagation Testing

The treatment of experimental error is even more important in analysis of cyclic crack growth data than in fracture toughness testing, and may even be of critical importance. It is more important for two reasons. First, the errors in the basic measurements are generally larger, since load control and measurement and crack length measurement are more difficult in cyclic testing. Some of the factors affecting the precision levels of the basic experimental measurements are discussed by Wei [15]. Secondly, the reduction and analysis of the basic data is a three- or four-step process. Experimental errors enter into each step in a different way, and errors in any one step will be carried into subsequent steps.

When the crack length is obtained indirectly, as in the compliance and electric potential methods [2], the basic measurement represents some function (usually nonlinear) of the crack length. The expected error in the inferred crack length can be calculated in terms of the precision level of the basic measurement and a derivative of the functional relationship, and will probably be nonlinear. Now having the crack lengths a_i at cycle numbers N_i, we

must obtain the growth rate da/dN, preferably by mathematical means. Several methods of numerical differentiation are evaluated by Frank and Fisher [16]. If we know the expected error in crack length and have a closed-form expression for the derivative, we can compute the expected error in growth rate, which again will probably be nonlinear. The stress intensity range ΔK is then computed (Eq. 6) at each value of crack length. The errors that may occur in this step have been discussed earlier in this paper, and they are overlooked by most investigators. If the cyclic loads are fixed, the error in ΔK will change as the crack grows; a short-crack high-load specimen and a long-crack low-load specimen may have the same ΔK but different error expectations; tests having the same ΔK but different load ratios will have different expected errors (see Eq. 7). The presence and variability of these errors severely complicate the final step, wherein an attempt is made to correlate the crack growth rate with the stress intensity range using one or more analytical models. The most popular model is that of Paris [17],

$$\frac{da}{dN} = C(\Delta K)^n$$

where C and n are empirical constants. This exponential equation can be linearized by taking the logarithm of both sides. One is then tempted to fit a straight line using the method of least squares. However, to do so in this case would be to violate one of the basic assumptions of the method.

The classical method of least squares assumes that errors E_y in the independent variable y are normally distributed and that the dependent variable x is known without error (or at least that $E_x \ll E_y$). But here

we have error in the independent variable ($\log \Delta K$) which is not always insignificant. The very complicated problem of linear regression with error in both variables is often cited in the literature [18,19], and there are solutions for special cases, but there appears to be no generalized solution applicable to the crack growth rate problem. In the absence of a rigorous method, a good engineering approximation might be to use a weighted least--squares fit with the weighting factor being the inverse square root of the sum of the squares of the expected errors in $\log(da/dN)$ and $\log(\Delta K)$. Such an approach would be relatively simple mathematically and would tend to place greatest emphasis on the points expected to be the most precise.

The errors involved in cyclic crack growth testing can be quite large even when the tests are carefully controlled. Frank and Fisher [16] used a test from the literature as an illustrative example. In this test, the crack half-length increased from 2 mm to 55 mm in a CC specimen 160 mm wide of 2024-T3 aluminum alloy 2 mm thick as the stress was cycled between 6.5 and 11.5 kg/mm^2. Assume that the errors in the cyclic stresses were 0.115 kg/mm^2 and the error in crack half-length measurement (E_a) was 0.25 mm (0.010 inch). Then at the beginning of the test the error in growth rate (secant method, [16]) is 50 percent and the error in ΔK (Eq. 7) is about 11 percent; at the end of the test the error in growth rate has decreased to 10 percent and the error in ΔK to about 5 percent. In the opinion of this author, such errors are much too large to be ignored.

SUMMARY AND CONCLUSIONS

For the specimen types considered here, the sensitivity of the computed stress intensity factors to errors in crack length measurement increases with the relative crack length, and is greater for singletip-crack specimens than for doubletip-crack specimens. Sensitivity is greatest for the remote-load single edge notch tension specimen and least for the double edge notch tension specimen. Based on an approximate stress intensity analysis, the part-through-crack specimen is relatively insensitive for crack depths less than about 70 percent of the plate thickness.

Based on the precision levels specified in ASTM Test Method E399-72, the maximum expected error in K_{Ic} due to test imprecision is about 2 percent for the compact specimen and about $2\frac{1}{2}$ percent for the bend specimen (only for specimens thicker than one inch). It is suggested that replicate tests be weighted inversely proportional to the square of their expected error. If this is done, a specimen with a relative crack length of 0.45 will have 40 percent (compact specimen) or 26 percent (bend specimen) more weight than one with a relative crack length of 0.55 ; or, a compact specimen will have 78 percent more weight than a bend specimen with the same relative crack length.

The treatment of experimental error is even more important in analysis of cyclic crack growth data than in fracture toughness testing, and may even be of critical importance. Even in carefully controlled tests the errors can become quite large due to accumulation and compounding.

REFERENCES

1. Irwin, G. R., in Proceedings, Seventh Sagamore Ordnance Materials Research Conference, August 1960, Syracuse University Press, MET.E.661-611/F.
2. Brown, W. F., Jr. and Srawley, J. E., Plane Strain Crack Toughness Testing of High Strength Metallic Materials, ASTM STP 410, American Society for Testing and Materials, 1966.
3. Wilson, W. K., Engineering Fracture Mechanics, Vol. 2, 1970, pp. 169-171.
4. Orange, T. W., in Stress Analysis and Growth of Cracks, Proceedings of the 1971 National Symposium on Fracture Mechanics, Part I, ASTM STP 513, American Society for Testing and Materials, 1972, pp. 71-78.
5. "Standard Method of Test for Plane-Strain Fracture Toughness of Metallic Materials," Annual Book of ASTM Standards, Part 31, May 1972, pp. 955-974.
6. Tada, H., Engineering Fracture Mechanics, Vol. 3, 1971, pp. 345-347.
7. Benthem, J. P. and Koiter, W. T., "Asymptotic Approximations to Crack Problems," Report No. 461, Laboratory of Engineering Mechanics, Technological University, Delft, The Netherlands, 1972.
8. Collipriest, J. E. and Ehret, R. M., "Computer Modeling of Part-Through Crack Growth," Report SD 72-CE-0015, North American Rockwell, July 1971.
9. Rawe, R. A., Schwab, D. E., Wroth, R. S., and Taketani, H., "Fracture Toughness of Aft (LOX) Dome Meridian Welds for the Saturn S-IVB," Report No. DAC-62138, McDonnell-Douglas Corp., August 1968.
10. Kobayashi, A. S. and Moss, L. W., in Fracture; Proceedings of the Second International Conference on Fracture, Chapman & Hall Ltd., 1969, pp. 31-45.

11. Hall, L. R. and Kobayashi, A. S., "On the Approximation of Maximum Stress Intensity Factor for Two Embedded Coplanar Cracks," Structural Development Research Memorandum No. 9, The Boeing Co., May 1964.

12. Swedlow, J. L., ed., The Surface Crack: Physical Problems and Computational Solutions, American Society of Mechanical Engineers, 1972.

13. McCabe, D. E., Journal of Materials, JMLSA, Vol. 7, No. 4, December 1972, pp. 449-454.

14. Wilson, E. B., Jr., An Introduction to Scientific Research, McGraw-Hill Book Co., 1952.

15. Wei, R. P., Engineering Fracture Mechanics, Vol. 1, 1970, pp. 633-652.

16. Frank, K. and Fisher, J., "Analysis of Error in Determining Fatigue Crack Growth Rates," Fritz Engineering Laboratory Report No. 358.10, Lehigh University, March 1971.

17. Paris, P. C. and Erdogan, F., Journal of Basic Engineering, Vol. 85, No. 4, 1963, pp. 528-534.

18. Kendall, M. G. and Stuart, A., The Advanced Theory of Statistics, Vol. 2: Inference and Relationship, Chapt. 29, Hafner Publishing Co., 1967.

19. Acton, F., Analysis of Straight-Line Data, John Wiley & Sons, 1959.

TABLE I. - CALIBRATION FACTORS

Specimen	Y	Range	Ref.
SENB4	$1.93 - 3.07\,\lambda + 14.53\,\lambda^2 - 25.11\,\lambda^3 + 25.80\,\lambda^4$	$0 \le \lambda \le 0.6$	2, 5
SENB8	$1.96 - 2.75\,\lambda + 13.66\,\lambda^2 - 23.98\,\lambda^3 + 25.22\,\lambda^4$	$0 \le \lambda \le 0.6$	2
SENB	$1.99 - 2.47\,\lambda + 12.97\,\lambda^2 - 23.17\,\lambda^3 + 24.80\,\lambda^4$	$0 \le \lambda \le 0.6$	2
	$\frac{2}{3}\,\lambda^{-1/2}\,(1 - \lambda)^{-3/2}$	$0.5 \le \lambda < 1.0$	3
SENT	$1.99 - 0.41\,\lambda + 18.70\,\lambda^2 - 38.48\,\lambda^3 + 53.85\,\lambda^4$	$0 \le \lambda \le 0.6$	2
	$\frac{1}{2}\,\lambda^{-1/2}\,(1 - \lambda)^{-3/2}\,(1 + 3\lambda)$	$0.3 \le \lambda < 1.0$	4
CT	$29.6 - 185.5\,\lambda + 655.7\,\lambda^2 - 1017.0\,\lambda^3 + 638.9\,\lambda^4$	$0.3 \le \lambda \le 0.7$	2, 5
	$\frac{1}{2}\,\lambda^{-1/2}\,(1 - \lambda)^{-3/2}\,(5 + 3\lambda)$	$0.8 < \lambda < 1.0$	3
CC	$(1 - 0.025\,\lambda^2 + 0.06\,\lambda^4)\left(\pi \text{ secant } \frac{\pi\lambda}{2}\right)^{1/2}$	$0 \le \lambda < 1.0$	6
DEN	$\sqrt{\pi}\,(1.122 - 0.561\,\lambda - 0.015\,\lambda^2 + 0.091\,\lambda^3)(1 - \lambda)^{-1/2}$	$0 \le \lambda \le 1.0$	7
NR	$\sqrt{\pi}\,(1.122 - 1.542\,\lambda + 1.836\,\lambda^2 - 1.280\,\lambda^3 + 0.366\,\lambda^4)(1 - \lambda)^{-3/2}$	$0 \le \lambda < 1.0$	7
PTC[a]	$\sqrt{\pi}\,\Phi^{-1}\left[1 + \sum_0^8 f_n\lambda^n \cdot \sum_0^5 g_n\left(\frac{a}{2c}\right)^n\right]$	$0 \le \lambda \le 0.96$	8

[a]

n	0	1	2	3	4	5	6	7	8
f_n	+0.091	+0.1014	-1.606	+15.81	-76.2	+197.9	-276.9	+195.9	-54.13
g_n	+1.433	-5.305	+6.81	+26.42	-109.4	+106.77			

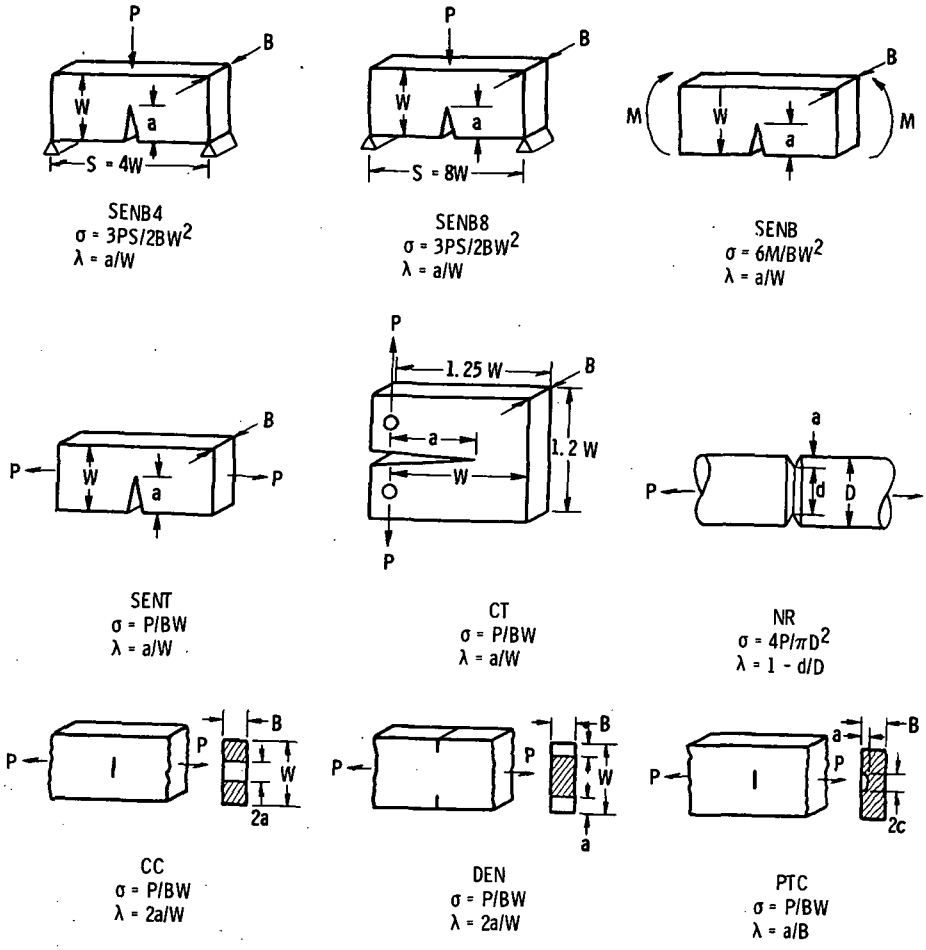

Figure 1. - Specimens and nomenclature.

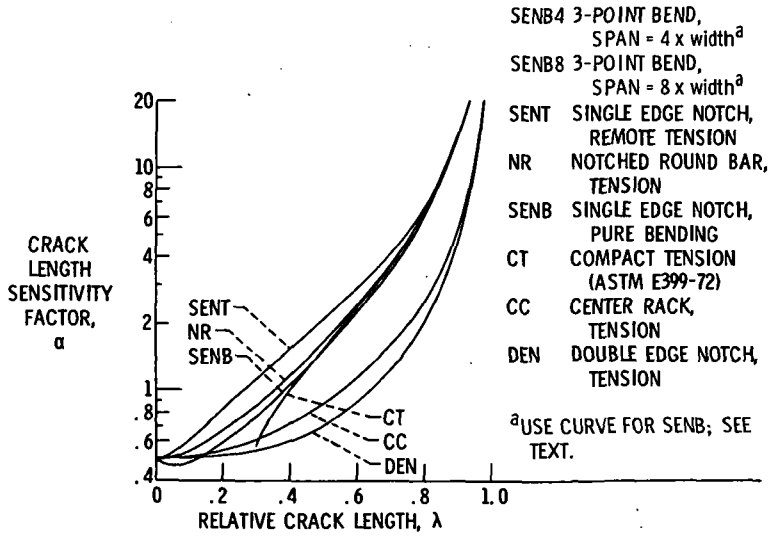

Figure 2. - Crack length sensitivity factor.

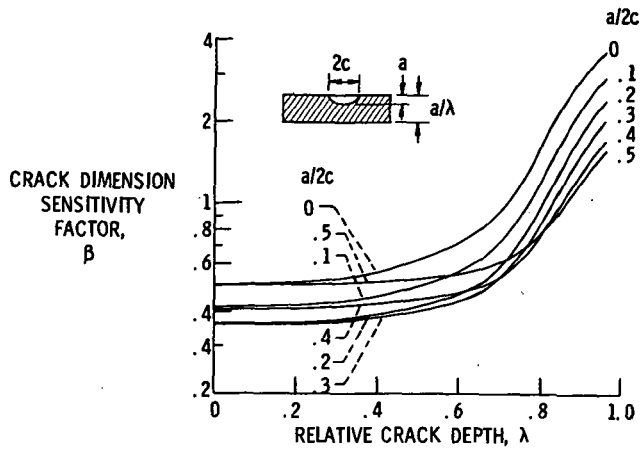

Figure 3. - Crack dimension sensitivity factor for PTC specimen.

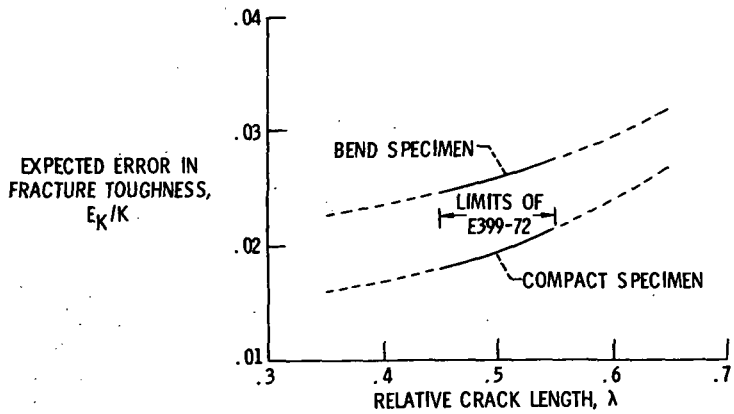

Figure 4. - Expected error in fracture toughness due to test imprecision (ASTM Test Method E399-72; specimens thicker than 1 in., misalignment of band specimen neglected).