N73-31799
Unclas
13825
(NASA-CR-121138) CARBON FIBER INTERNAL PRESSURE VESSELS Technical Report, Jan. - Dec. 1972 (Naval Ordnance Lab.) 32 p HC $3.75 CSCL 11D G3/32

AD 767018

NOLTR 73-60

NASA CR-121138

CARBON FIBER INTERNAL PRESSURE VESSELS

BY
Robert A. Simon

OCT 1973
RECEIVED
NASA STI FACILITY
INPUT BRANCH

17 JULY 1973

NOL

NAVAL ORDNANCE LABORATORY, WHITE OAK, SILVER SPRING, MARYLAND

NOLTR 73-60
NASA CR-121138

APPROVED FOR PUBLIC RELEASE;
DISTRIBUTION UNLIMITED

CARBON FIBER INTERNAL PRESSURE VESSELS

by:
Robert A. Simon

ABSTRACT: Internal pressure vessels were designed, filament wound of carbon fibers and epoxy resin and tested to burst by two contractors, Hercules, Incorporated, Cumberland, Maryland, and the Brunswick Company, Lincoln, Nebraska. The fibers used were Thornel 400, Thornel 75 and Hercules HTS. In addition, Hercules fabricated additional vessels with their Type A fiber. Polymeric liners were used, and all burst testing was done at room temperature. The objective was to produce vessels with the highest attainable P_bV/W efficiencies. The Type A vessels by Hercules showed the highest average efficiency: 2.56×10^6 cm. Next highest efficiency was with Thornel 400 vessels by Hercules: 2.21×10^6 cm.

These values compare favorably with efficiency values from good quality S-glass vessels, but strains averaged 0.97% or less, which is less than 1/3 the strain of S-glass vessels. Thus, the carbon fiber vessels are strain compatible with some liner materials at cryogenic temperatures, whereas the S-glass vessels generally are not. Efficiencies of the carbon fiber vessels were up to 60% higher than values for present metal vessels. Use of the carbon fiber vessels offers a significant weight savings potential for aerospace applications.

APPROVED BY: F. Robert Barnet

Nonmetallic Materials Division
CHEMISTRY RESEARCH DEPARTMENT
NAVAL ORDNANCE LABORATORY
SILVER SPRING, MARYLAND

The tests as reported herein were conducted to provide data leading toward the potential use of carbon fiber composites in the construction of cryogenic tankage for spacecraft. The importance is that such tankage would be lighter and would permit a greater payload on the spacecraft.

This report covers Tasks VII and VIII, performed during the period January - December 1972 under NASA Defense Purchase Request C-10360 B, and is the fourth and last report in a series covering Tasks I - VIII.

The work was funded by the National Aeronautics and Space Administration, Lewis Research Center (NASA LeRC), Cleveland, Ohio. The NASA Project Manager was Mr. Raymond F. Lark of the Materials and Structures Division.

The naming of companies or products in this report does not necessarily constitute an endorsement by the U. S. Government.

ROBERT WILLIAMSON II
Captain, USN
Commander

Carl Boyars

CARL BOYARS
By direction

CONTENTS

	Page
INTRODUCTION	1
REQUIREMENTS, REASON FOR THE WORK, AND CONTRACTORS	1
I. Requirements	1
II. Reason for the Work	3
III. Contractors	3
CONTRACTOR DESIGN & FABRICATION CONCEPTS	4
FIBER	6
FABRICATION	9
I. Mandrels	9
A. Hercules	9
B. Brunswick	9
II. Winding	9
A. Hercules	9
B. Brunswick	10
III. Completed Vessel Characteristics	11
IV. Pressure Testing	11
RESULTS	12
DISCUSSION	15
I. Efficiency Values	15
II. Comparison of Design and Fabrication Concepts	15
III. Vessel Fracture Modes	15
IV. Vessel Strain	16
SUMMARY AND CONCLUSIONS	16
RECOMMENDATIONS	17
REFERENCES	19

ILLUSTRATIONS

Figure	Title
1.	Hercules Pressure Vessel Design
2.	Brunswick Pressure Vessel Design
3.	Brunswick In-pland Winding Machine
4.	Hercules Carbon Fiber Reinforced Pressure Vessels
5.	Hercules Carbon Fiber Reinforced Pressure Vessels
6.	Hercules Vessel Ready for Testing
7.	Brunswick Vessel Ready for Testing
8.	Hercules Vessels After Pressure Testing
9.	Hercules Vessels After Pressure Testing
10.	Brunswick Vessels After Pressure Testing
11.	Brunswick Vessels After Pressure Testing
12.	Brunswick Vessel

Table	Title	Page
1.	Summary of Work on Tasks I-VIII	2
2.	Vessel Design and Fabrication Concepts	5
3.	Vessel Design Parameters	7
4.	Manufacturers' Stated Properties of Carbon Fibers	8
5.	Measurements Made for Vessel Testing	12
6.	Vessel Pressure Testing Results	13
7.	Summary of Average Pressure Testing Results	14

APPENDIX A A-1

APPENDIX B B-1

This report is the fourth in a series by the Naval Ordnance Laboratory (NOL) for the National Aeronautics and Space Administration (NASA) on the use of carbon (or graphite) fiber composites for the construction of pressurized containers for cryogenic liquids. The three previous reports are references (a)-(c). The NASA interest is to save weight on spacecraft by replacing metal containers with lighter weight filament wound containers. Glass filament wound containers have given high P_bV/W efficiencies, but the working strains of 2% or more are too high (at cryogenic temperatures) for known liner materials, which then rupture and allow gas seepage through the thin filament-wound porous walls, reference (d). Carbon fiber composites, with their high moduli and working strains of under 1%, hold the potential for being more strain compatible with thin liner materials and, therefore, attractive for light weight vessel construction.

This report is the last in this series and reports on the work done in Tasks VII-VIII. Table 1 summarizes all of the work on Tasks I-VIII. As noted in Table 1, the objective of the work reported herein was to design, fabricate and test on contract a number of 20.3 cm diameter pressure vessels to demonstrate high P_bV/W efficiency values. These vessels were similar to the vessels tested in Task II of this work, reference (a), but in this case the state-of-the-art of carbon fiber/epoxy vessels was significantly advanced since work was conducted in Task II.

REQUIREMENTS, REASON FOR THE WORK, AND CONTRACTORS

I. Requirements

The requirements for the work were the following:

Each of two manufacturers shall filament wind a minimum of six pressure vessels. The materials and quantities shall be the following:

FIBER	QUANTITY OF VESSELS
Thornel 400	2
Thornel 75	2
Hercules HTS	2

RESIN		
Epon 828	100 parts	Cure 2 hours at 66°C
Dodecenyl succinic anhydride	115.9	
Empol 1040	20	
Benzyl dimethyl amine	1	4 hours

Table 1

SUMMARY OF WORK ON TASKS I-VIII

Task	NASA Authorization and Date	Work Done	Report
I	DPR C-10360-B 27 Mar 67	Conduct a preliminary materials investigation. Five fibers, three surface treatments, two resins. Bars, NOL Rings.	NOLTR 69-183, (NASA CR-72652); 13 May 1970
II	Amend 1 19 Mar 69	Design & fabricate 12 vessels using two fibers, one resin. Test at cryogenic temperatures. (Done on contract to Aerojet-General Corporation.)	
III	Amend 2 17 Feb 69	Investigate effects of polyblend epoxy resins on composite properties. One fiber, seven resins. NOL Rings, panels.	NOLTR 70-195, (NASA CR-72804); 9 Mar 1971
IV	Same as III	Further investigate effects of polyblend resins on composite properties. Four fibers, four resins. Bars, NOL Rings, flat plates.	NOLTR 71-201, (NASA CR-120899); 2 May 1972
V	Same as III		
VI	Same as III		
VII	Amend 4 14 Jun 71	Design, fabricate a minimum of 12 vessels using three fibers, one resin. Test at room temperature. (Done on contract.)	This report; NOLTR 73-60 (NASA CR-121138); June, 1973
VIII	Amend 5 29 Sep 71		

The vessels shall be nominally 20.3 cm in diameter by 33 cm long, with a nominal burst pressure of 1380 newtons/cm^2 (2000 psi). Liners shall be elastomeric, and all burst tests shall be performed at room temperature. The boss opening shall be 15 to 25 percent of vessel diameter. The winding mandrel shall be plaster, or equivalent. Fiber content shall be 55 to 60 percent, by volume. Of main importance is the achievement of high P_bV/W efficiency values.

Items not stipulated and, therefore, at the discretion of the manufacturers, were the following:

1. the type of winding - helical or in-plane;
2. a balanced (1:1 hoop:axial strain ratio) or unbalanced design;
3. the design analysis, whether netting, finite element, or other program;
4. the method of adding resin, whether as prepreg or wet wind;
5. the fiber tension, winding speed, winding temperature, and other processing variables.

II. Reason for the Work

This work on Tasks VII and VIII was a reasonable continuation of the work that preceded it. As shown in Table 1, Tasks I, III, IV, V, and VI all dealt with materials properties and gave information about the effects of temperature on the properties of a number of carbon fiber composites. These results were promising toward ultimate use of these composites in vessels. Task II was the winding and testing of vessels, but the quality of the fiber available then was substandard by today's criteria, and in-plane winding was used with a slip angle which resulted in fiber slippage and low burst pressures. As a result, the Task II vessels had low efficiencies, and left questions as to the best design and fabrication procedures. Information on these was needed, and it was to this end that Tasks VII and VIII were addressed.

III. Contractors

The two contractors selected to design, fabricate and test the vessels were Hercules, Incorporated, Cumberland, Maryland, and the Brunswick Company, Lincoln, Nebraska. The contractors were chosen on the basis of all responses to reference (e). Contracting information is as follows:

CONTRACTOR	NOL CONTRACT NO.	DATE OF CONTRACT
Hercules	N60921-72-C-0292	20 April 1972
Brunswick	N60921-72-C-0291	20 April 1972

After contracting, Hercules requested that they be allowed to add their Type A fiber and make three additional vessels at their expense. This request was granted.

After the contractors had completed their work, each submitted a report to NOL. Most of the data presented herein was extracted from those reports. The Hercules report was the more extensive of the two, and so this final report contains more design and fabrication data from Hercules than from Brunswick.

CONTRACTOR DESIGN & FABRICATION CONCEPTS

The freedom allowed the contractors in their tasks (see Requirements) resulted in the contractors having considerable differences from each other in their design and fabrication concepts. Table II presents some information on these concepts.

Table II

VESSEL DESIGN AND FABRICATION CONCEPTS

		Hercules	Brunswick
1.	Design analysis	Netting	Netting
2.	Hoop/axial fiber stress ratio	1.30	1.41
3.	Local reinforcement of dome/cylinder intersection	Yes (some vessels)	No
4.	Winding path	Geodesic (helical)	In-plane
5.	Mandrel coating	Chlorobutyl rubber	None - liner added to vessel after winding.
6.	Resin impregnation of fiber	HTS & Type A wet wound. Others preimpregnated on subcontract.	Preimpregnated on subcontract

These significant differences in the two procedures confirmed the usefulness of having two competing contractors. At the end of the program, the vessel results would then show the better procedure. Details of the designs, including winding patterns, composite thicknesses, stresses, etc., are shown in Table III.

Design analysis of the composite pressure vessel for both companies was based upon netting analysis. Hercules stated that this approach for simple geometric shapes such as axisymmetric vessels loaded by internal pressure has been found to provide an acceptable first order measure of vessel design parameters. The design approach using netting analysis was to place enough low-angle axial wraps on the structure to satisfy the axial load requirements, with overwrapped hoop windings to resist applied hoop loads.

Netting analysis neglects the load carried by the resin and allows fiber stresses to be determined entirely through the equilibrium of forces. Netting theory can be quickly used to compare the stress levels of elastically similar structures. Its ease of application has made it a very useful tool in the preliminary design of pressure vessels, since when coupled with a proper interpretation of test data, netting theory can accurately predict the burst strength of filament wound pressure vessels. The netting analysis dictated slightly different dome contours for vessels made from each of the different fibers, but for economy a single contour was used so that only one mandrel shape would be needed by each contractor. The mandrels deviated from the individual contours by 0.080 cm (0.031 inch)

at most, and were usually within .012 cm (0.005 inch). These slight deviations are considered to have had a negligible effect on PV/W values of the vessels.

The Hercules design used a type of reinforcement at the tangency (dome to hoop) area which is not generally used. To add this reinforcement, a whole helical layer was wound on, then cut away in the cylindrical section to within 2.5 cm of the tangency point. This left the tangency area and the dome with the remainder of the helical layer to act as reinforcement. This reinforcement was used to improve the burst pressure reproducibility of the vessels with HTS and Type A fiber, as supported by Hercules data from previous work. The reinforcement was not used with the vessels made with Thornel fibers because benefits from such reinforcement are not realized unless more than two helical layers are used. Figure 1 is a drawing of the Hercules vessel.

Brunswick used in-plane or polar winding with a wind angle of 9 degrees. Their machine was a "tumble" winder, with a stationary fiber delivery system. Both contractors considered their fiber delivery systems to be proprietary. Figure 2 is a drawing of the Brunswick vessel.

FIBER

The carbon fiber was purchased by NASA and supplied to both contractors by NOL except for the Type A which was supplied by Hercules. Table IV gives manufacturers' data on the fibers. Approximately 2.3 Kg (5 pounds) of each type of fiber (except Type A) were supplied to each contractor. The Thornels were supplied as nominally one-pound spools, and the HTS as half-pound spools. Appendix A is a table which shows details of lot numbers, spool weights, etc. of the fibers supplied.

Table III

VESSEL DESIGN PARAMETERS

	HERCULES				BRUNSWICK		
	Thornel 400	Thornel 75	HTS	Type A	Thornel 400	Thornel 75	HTS
Geometry*	XOXO●	XOXO●	XOOXO MOXO	XOOXO MOXO	**	**	**
Axial layers	2	2	3	3	2	2	2
Hoop layers	2.5	2.5	5	5	4	4	4
No. of parallel yarns used in winding	8	16	1	1	6	14	1
Band density, yarns/cm/ply; axial	18	42	1.97	1.97	15.7	36.6	2.64
hoop			1.57	1.57	21.5	50.2	3.58
Composite thickness, cm. axial	0.117	0.094	0.086	0.094	0.118	0.112	0.109
hoop	0.145	0.117	0.117	0.127	0.134	0.126	0.124
total	0.262	0.210	0.203	0.220	0.252	0.238	0.233
Projected composite wgt, Kg	0.65	0.45	0.71	-	0.70	0.55	0.65
Maximum burst pressure, n/cm^2:							
based on axial windings	2533	1932	2024	2490	2160	1639	1622
based on hoop windings	2719	2051	1909	2348	-	-	-
Projected burst pressure, n/cm^2	2240	1450	2020	-	2110	1330	1590
Maximum fiber stresses, 10^3 n/cm^2							
axial, cylinder	263	246	230	262	186	150	152
axial, dome	219	205	192	218			
hoop	285	266	250	283	262	211	214
off spool	292	273	256	290	293	262	255
Projected PV/W efficiency, 10^6 cm	2.90	2.95	2.41	-	2.59	2.06	2.11

*X = axial layer O = hoop layer ● = ½ hoop layer
M = partial axial layer for dome and tangency reinforcement
** = not provided by the vessel fabricator

Table IV

MANUFACTURERS' STATED PROPERTIES OF CARBON FIBERS

	Thornel 400	Thornel 75	HTS	Type A
Tensile strength, 10^3 n/cm^2	293	262	242 min.	269 min.
10^3 psi	425	380	350 min.	390 min.
Tensile modulus, 10^6 n/cm^2	23	54	25-29	19-23
10^6 psi	34	78	36-42	28-34
Elongation at break, %	1.2	0.5	---	---
Density, gm/cm^3	1.78	1.80	1.73	1.81
Yarn or tow cross-sectional area 10^{-4} cm^2	9.7	3.2	44.4	48.8
Yield, meters/gm	6.0	16.5	1.3	1.1
Filaments per end, yarn, or tow	2000	1440	10,000	10,000

FABRICATION

I. Mandrels

A. Hercules

1. Hercules machined blocks of salt (sodium chloride) for the cylindrical and dome sections, bonded them together, bonded in the machined pole pieces, and coated the assemblies with chlorobutyl rubber to produce their mandrels. The chlorobutyl rubber was applied by a dip process, repeated until the rubber thickness was 0.050 cm. The mandrel diameters, lengths, and weights were measured.

B. Brunswick

1. Brunswick cast sand with a water-soluble binder into molds to produce their mandrels. The castings were machined to size, the bosses bonded in, and the assemblies coated with a fluoropolymer to prevent resin adhesion to the sand surface.

Appendix B gives more detailed information on the mandrel fabrication for both contractors.

II. Winding

A. Hercules

1. Hercules used helical winding with a 23 degree wind angle for the axial layers. As noted in the "Design", the local reinforcement was added by winding a complete axial layer, then carefully cutting away the layer in the cylindrical section to within 2.5 cm of the dome tangency point. Not all vessels had this reinforcement layer. After completion of all winding, the vessels were placed in ovens and the resins cured. The following table gives winding information for each Hercules vessel type:

	Thornel 400	Thornel 75	HTS	Type A
1. Resin addition	prepreg	prepreg	wet wind	wet wind
2. Local reinforcement	no	no	yes	yes
3. Winding tension, Kg	6	1.5	6	6

2. The low winding tension with the Thornel 75 fiber was dictated by its low strand strength and the many fiber breaks encountered with higher tensions. The yarn as off-spooled had many splices, and these splices were stiff and also tended to break.

3. The vessels, on cooldown, showed outer-surface wrinkling. This was attributed to the softness of the warm resin and the mismatch in thermal coefficients of the outer hoop layers compared to everything inside of it, including helical layers and the mandrels. No shrink tape was used.

4. After cooldown, the mandrels were washed out with water, the vessels dried, then coated on the inside with Epon 946 resin for a water barrier. After weighing, the vessels were ready for testing.

B. Brunswick

1. Brunswick wound in-plane on a "tumble" winding machine. Tensions were 3.6 Kg for the polar winds, and 4.1 and 4.5 Kg for the first and second hoop layers, respectively. All fibers were pre-impregnated with resin by a subcontractor. After winding, the vessels were wrapped with shrink tape. The vessels with HTS and Thornel 75 fiber had shrink tape in the polar direction only, whereas the Thornel 400 vessels had polar and hoop layers of shrink tape. Figure 3 shows a vessel with the shrink tape being applied.

2. After an oven cure, the vessels were cooled, the shrink tape removed, the mandrels washed out with water, and the interior of the vessels "slush" coated with several thin coats of Turco 5145 chem-mill masking. The vessels were then weighed and were ready for test. Appendix B gives more information on vessel fabrication for both contractors.

III. Completed Vessel Characteristics

The completed vessels had the following sizes, weights and volumes:

	Avg Vessel Composite Wgt, gm	Avg Vessel Outside Dia., cm	Avg Vessel Length, cm	Avg Vessel Interna. Volume, liters
HERCULES				
T-400	780	19.95	33.02	8.455
T-75	625	19.93	33.06	8.461
HTS	648	19.93	33.05	8.368
Type A	715	19.93	33.01	8.323
BRUNSWICK				
T-400	688	20.31	33.72	8.223
T-75	681	20.34	33.56	8.321
HTS	642	20.26	33.59	8.288

Figures 4 and 5 show Hercules vessels after fabrication. Brunswick did not provide pictures of their vessels after fabrication.

IV. Pressure Testing

All vessels were tested by both contractors at room temperature using hydrostatic internal pressure to burst. Electric strain gages were bonded to the external surfaces of the vessels to show vessel strain. Also measured were pressure, vessel temperature, and time. Table V lists some of the equipment used in making the measurements.

Table V

MEASUREMENTS MADE FOR VESSEL TESTING

	HERCULES	BRUNSWICK
1. Hydrostatic pressure - no. of sensors	2	2
2. Pressurization rate	-	7 n/cm^2/sec (10 psi/sec)
3. Electric strain gages	BLH PA-7 type - total 5 1) axial strain - dome 2) hoop strain - tangency 3) axial strain - tangency 4) hoop strain - center 5) axial strain - center Long wire type - total 3 1) 10 cm long for axial average 2) 18 cm long - to axial tangent points 3) 33 cm long - pole to pole	BLH PA-7 type - one belly band for hoop strain average. Micro Measurements $\frac{1}{4}$-inch foil-total 2 1) axial, hoop } in center 2) axial, hoop } 2.5 cm from center
4. Recorder	Honeywell Visicorder	Honeywell Visicorder
5. Temperature	Bonded-on resistance temperature sensor	Surface pyrometer prior to test

Figure 6 shows an instrumented Hercules vessel ready for pressure testing. Figure 7 shows a similar Brunswick vessel.

RESULTS

The results of pressurizing the vessels to burst, along with calculated efficiency values, are shown in Table VI.

Table VI

VESSEL PRESSURE TESTING RESULTS

HERCULES Fiber	Vessel No.	Pressurization Rate $n/cm^2/sec$	Burst Pressure n/cm^2	Failure Mode	Ult. Axial Fiber Stress $10^3\ n/cm^2$	Ult. Hoop Fiber Stress $10^3\ n/cm^2$	$\frac{PV}{W}$ 10^6 cm
T-400	NOL3	13.2	1960	Combined	173	202	2.14
	NOL4	13.2	2050	Combined	180	211	2.29
T-75	NOL5	13.3	833	Dome	91.1	106	1.16
	NOL6	14.3	273	Dome	22.8	26.9	0.373
HTS	NOL1	13.2	1500	Combined	175	193	2.03
	NOL2	13.2	1640	Combined	191	210	2.11
Type A	GA6083	13.0	2120	Combined	229	251	2.50
	GA6084	13.2	2190	Combined	236	259	2.55
	GA6085	13.1	2170	Combined	235	257	2.64
BRUNSWICK							
T-400	1	17.3	1480	Hoop	131	184	1.71
	7	17.3	1580	Combined	141	197	1.94
	8	-	932	Hoop	82.8	117	1.13
T-75	3	7.6	607	Dome	63.5	89.7	0.787
	4	8.3	773	Dome	80.7	114	0.955
HTS	5	8.3	1370	Combined	145	205	1.75
	6	8.3	1240	Combined	131	185	1.69

A summary of average vessel performance results is shown in Table VII.

Table VII

SUMMARY OF AVERAGE PRESSURE TESTING RESULTS

HERCULES Fiber	Avg PV/W 10^6 cm	Avg Stress at Burst As % of Ult. Fiber Stress Axial	Hoop	Avg Strain at Burst Axial	Hoop
T-400	2.21	60%	71%	0.58%	0.80%
T-75	0.767	~20	~25	~0.07	~0.20
HTS	2.07	70	77	0.41	0.62
Type A	2.56	80	87	0.69	0.97
BRUNSWICK					
T-400	1.59	40%	57%	0.50%	0.69%
T-75	0.871	27	38	0.14	0.16
HTS	1.72	53	74	~0.50	0.61

The highest efficiency value was 2.56 x 10^6 n/cm^2, achieved by Hercules with Type A fiber. Next highest were 2.21 and 2.07 x 10^6 n/cm^2, with Thornel 400 and HTS, respectively, in vessels by Hercules. Strains were all under 1 percent, with 0.97% for Type A fiber being the maximum. The values for the Thornel 75 vessels were quite low for both manufacturers; all four vessels failed "prematurely" by blowing out pieces of the dome. The other vessels generally failed in the "combination" mode. In this mode, it is usually considered that the hoop fibers failed first, and the failure then propagated into the underlying axial fibers. This is the mode that usually indicates the most evenly stress-balanced vessel, and therefore the highest efficiency values. All vessels exhibited brittle fracture, with the tested vessels usually ending up in several pieces.

Figures 8 and 9 show Hercules vessels after testing. Figures 10 and 11 show Brunswick vessels after testing.

DISCUSSION

I. Efficiency Values

The best $\frac{\text{Pressure x Volume}}{\text{Weight}}$ efficiency values (based on burst strengths) in this work were reasonably high. The values of 2.56 x 10^6 cm for Type A and 2.21 x 10^6 cm for the Thornel 400 compare favorably with values for good quality S-glass vessels of this size. The fiber stresses for these highest efficiency vessels ranged from 70 to 87% of the strengths of the fibers used, so that no large additional increases in efficiency are possible with these fibers.

II. Comparison of Design and Fabrication Concepts

The Hercules efficiency values exceeded the Brunswick values by 10 to 20 percent. This may have come partly from Hercules' use of helical winding, which they claim is more efficient, or from the dome reinforcement which was used in two of the vessel types, or from the other many small differences between the procedures of the two contractors. Both contractors considered their fiber delivery systems to be proprietary and did not allow observation of those systems. Use of a shrink tape overwrap on the vessels during cure is a point in controversy; in this case, Brunswick used it and Hercules didn't. The Brunswick vessels, after cure and stripping of the shrink tape, were seen sometimes to have some waviness in the hoop windings, Figure 12. In the previous work by Aerojet (reference (a)), vacuum bagging was used and produced sharp wrinkles in the vessel walls. It was discontinued after use on several vessels. These waves and wrinkles are undesirable and are to be avoided. The indication is that vacuum bagging or shrink tape is not desirable. The best time to put the proper amount of resin on the fiber and to position it properly is at the time of winding. Any later pushing on the outside of a curved (convex) shape is at the jeopardy of having excess fiber present and causing wrinkling. This is especially true of high modulus fibers, in which the winding tension may stretch the fibers only 0.1% or less, and for which there is therefore very little elastic takeup of excess fiber.

However, it can be pointed out that in filament winding the first layers to be applied also may become compressed by succeeding layers on top, and these first layers may become wrinkled. This can be minimized by proper programming of tension from inside to outside, but perhaps not entirely avoided.

III. Vessel Fracture Modes

The carbon fiber vessels all displayed a brittle fracture mode which seems to be general to carbon fiber composites to date, but not exclusive to these composites--the metal vessels now used in spacecraft sometimes fail in the same way. Glass fiber vessels, by

contrast, usually fail in a small local area and simply vent the pressure without producing flying pieces. The problem of brittle fracture was recognized early in the whole NASA task, and references (b) and (c) detail results of efforts to increase the fracture toughness of these composites. One system, consisting of HTS fiber and ERLB 4617/methylene dianiline/CTBN rubber resin, looked quite promising in that its fracture toughness went up markedly at cryogenic temperatures as compared to room temperature. The other composites, by comparison, reduced in toughness at cryogenic temperatures. The promising cryogenic system was not used in the work reported herein because none of the tests were at cryogenic temperatures. That system, in any future vessel tests at cryogenic temperature, would be expected to be tougher than any of the other systems tested.

IV. Vessel Strain

The ultimate strain in the highest efficiency vessel was 0.97%. This strain is only approximately 1/3 of that encountered in glass fiber composites, but together with the strains caused by thermal expansion coefficient differences still may be enough to cause resin crazing or liner yielding of low strength thin metal liners. As discussed in reference (a), the vessels when cooled from curing temperatures to cryogenic temperatures may experience over 1 percent resin tensile strain and 0.3% metal liner tensile strain. If further strains on subsequent pressurization exceed 0.5%, then crazing and yielding could occur. These would be expected to have little or no effect on short-term or low-cycle vessel life requirements.

SUMMARY AND CONCLUSIONS

1. A total of 16 carbon fiber internal pressure vessels were designed, fabricated and tested by two contractors; nine by Hercules, Incorporated, and seven by the Brunswick Corporation. The intent of the work was for these contractors to take three types of supplied fiber and use their design and fabrication techniques to produce vessels with the highest $\frac{\text{Pressure x Volume}}{\text{Weight}}$ efficiency values that they could achieve. Hercules added, at their request and expense, a fourth type of vessel made from Hercules Type A fiber.

2. The following table summarizes the efficiency values achieved:

Contractor	Fiber	Vessel Efficiency, 10^6 cm
Hercules	Type A	2.56
Hercules	Thornel 400	2.21
Hercules	HTS	2.07
Brunswick	HTS	1.72
Brunswick	Thornel 400	1.59
Brunswick	Thornel 75	0.87
Hercules	Thornel 75	0.77

The highest values, 2.56 to 2.07 x 10^6 cm, are quite high, and equal to values obtained with S-glass vessels of the same size. Stresses in these vessels achieved 70 to 87 percent of the manufacturers' values of strengths for the as-received fibers, so that no large additional gains in vessel efficiencies are possible.

3. The higher P_bV/W values from the Hercules vessels are assumed to be the result of the differences in their procedure from the Brunswick procedure. Features used by Hercules on some or all of their vessels include the following: helical winding pattern, on-stream resin impregnation, dome and tangency reinforcement, and no shrink tape. Brunswick used in-plane winding, resin preimpregnation, no reinforcement and shrink tape. Both contractors used proprietary fiber delivery systems.

4. All vessels failed by a brittle fracture mode. Previous work in this program with epoxy-CTBN rubber (polyblend) resins revealed one composite system to be quite promising because of its high fracture toughness at cryogenic temperatures. That system was not used for these vessels because these were tested at room temperature.

5. Strains measured during burst testing ranged from 0.69 to 0.97 percent for the highest efficiency vessels. Calculations indicate that for a vessel in cryogenic service, cooling to cryogenic temperatures would impose additional strains on the metallic liner due to the difference in the coefficient of thermal contraction between the liner and composite materials. The total strain thus imposed on a liner in a vessel used in cryogenic service would be high enough (at an operating stress of 60-percent of composite ultimate strength) to cause yielding of metal liners. The use of a cryogenic adhesive for bonding the liner to the inside wall of the vessel would however prevent liner buckling from occurring during vessel depressurization. The cyclic life of a carbon fiber composite vessel would accordingly be limited by the fatigue life characteristics of the liner material. At room temperature service, however, the strain of the liner/vessel (0.41 to 0.58-percent) at an operating stress of 60 percent of composite ultimate strength is sufficiently

low to operate high strength thin metallic liners (Inconel 718) below their yield strength. Projected cyclic life characteristics of such liners would be excellent. It is anticipated that such liners would also be adhesively bonded to provide a greater margin of reliability.

6. The intent of the work was achieved. High vessel efficiency values were demonstrated and useful fabrication information was shown in the procedure which resulted in vessels with the highest efficiency values.

RECOMMENDATIONS

Based on the work performed in this program, the following recommendations are presented:

1. Fabricate pressure vessels using the high strength, high toughness composite identified in Task III. This composite consists of

   HTS carbon fiber

   ERLB 4617 - 100 parts
   methylene dianiline - 46 parts } "polyblend" resin
   CTBN rubber - 10 parts

   Use thin metallic liners and test the vessels to burst at cryogenic temperatures. This test would show whether this tough system would overcome the problem of brittle fracture when the vessels burst.

2. Fabricate composites or vessels and expose to simulated space craft service-type conditions.

REFERENCES

(a) NOLTR 69-183, R. A. Simon, "Properties of Graphite Fiber Composites at Cryogenic Temperatures," NASA CR-72652, May 1970

(b) NOLTR 70-195, J. V. Larsen, "Properties of Graphite Fiber Composites at Cryogenic Temperatures -- Effects of Elastomeric Additions to Resin Systems," NASA CR-72804, Mar 1971

(c) NOLTR 71-201, J. V. Larsen and R. A. Simon, "Carbon Fiber Composites for Cryogenic Filament Wound Vessels," NASA CR-120899, May 1972

(d) M. P. Hanson, H. T. Richards and R. O. Hickel, "Preliminary Investigation of Filament Wound Glass Reinforced Plastics and Liners"

(e) NOL Solicitation No. N60921-72-R-0195, dated 25 Jan 72.

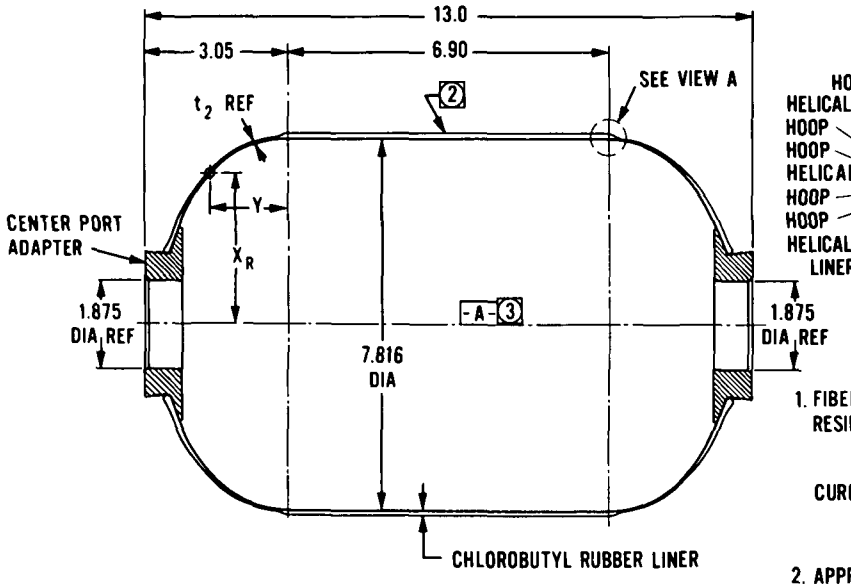

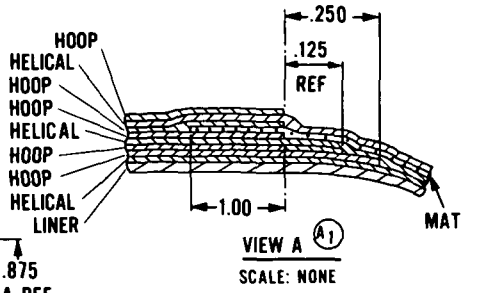

NOTES:

1. FIBER TO BE IMPREGNATED WITH THE FOLLOWING RESIN SYSTEM: EPON 828/DSA/EMPOL 1040/BDMA IN RATIO 100/115.9/20/1 PARTS BY WEIGHT.
   CURE SCHEDULE: 8 HR @ 125°F
   2 HR @ 150°F
   4 HR @ 300°F
2. APPROX VESSEL INTERNAL VOLUME = 497 IN^3.
3. COMPOSITE SURFACE FINISH TO BE AS WOUND.
4. ALL DIMENSIONS IN INCHES.

FIBER MATERIAL	CYLINDRICAL WALL THK			NO. LAYERS		BAND DENSITY ENDS/IN/PLY		WINDING SEQUENCE
	TOTAL	HOOP	HELICAL	HOOP	HELICAL	HOOP	HELICAL	
THORNEL 400 WYM 30	.103	.057	.046	2.5	2.0	45.7	45.7	XOXO●
THORNEL 755 WYL 160½	.083	.046	.037	2.5	2.0	106.7	106.7	XOXO●
HERCULES HTS	.080	.046	.034	5.5	3.0	5	4	XOOXOMOXO

WINDING LEGEND:

X = 1 HELICAL
O = 1 HOOP
M = 1 MAT
● = ½ HOOP LAYER

FIG. 1 HERCULES PRESSURE VESSEL DESIGN

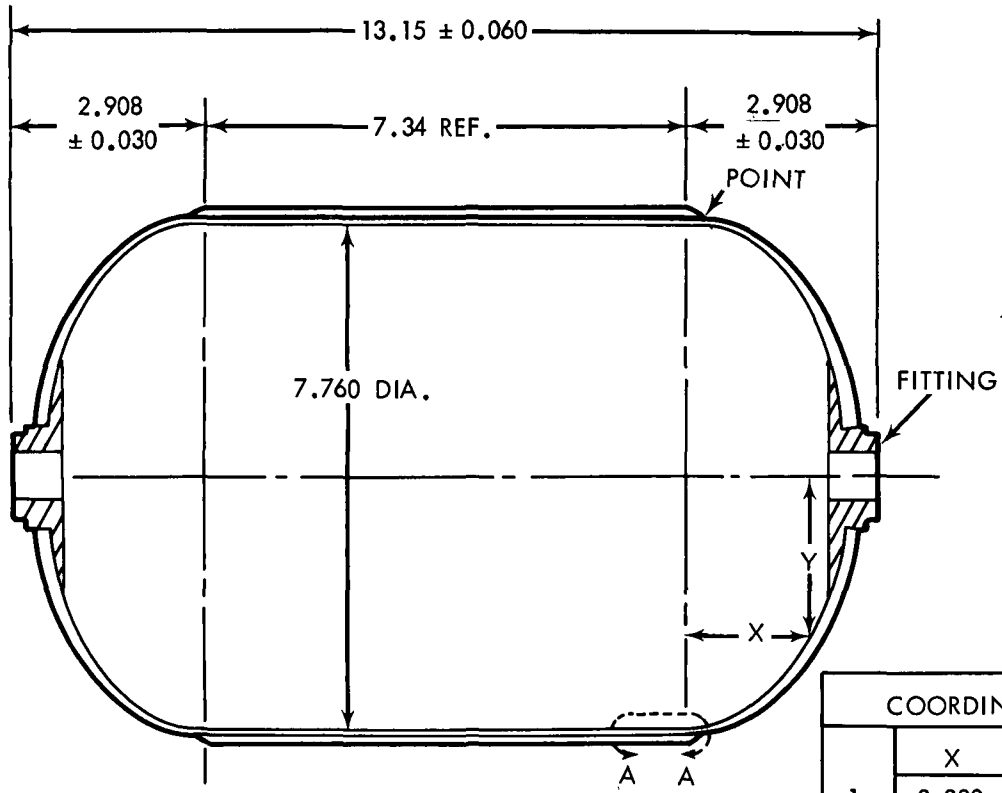

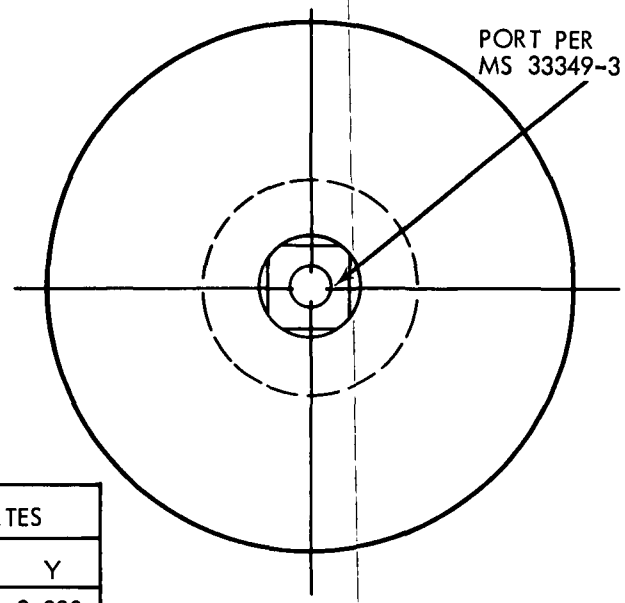

COORDINATES		
	X	Y
1	0.000	3.880
2	0.228	3.867
3	0.426	3.826
4	0.663	3.764
5	0.877	3.676
6	1.073	3.566
7	1.256	3.348
8	1.424	3.292
9	1.577	3.132
10	1.713	2.861
11	1.834	2.779
12	1.939	2.591
13	2.028	2.333
14	2.103	2.203
15	2.165	2.005
16	2.211	1.815
17	2.245	1.634

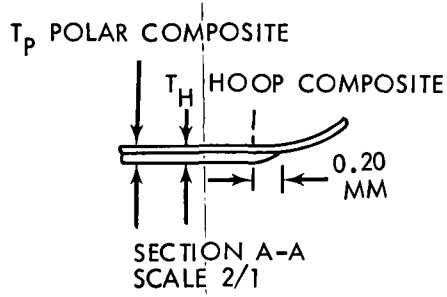

1. UNCURED RUBBER TO BE BONDED ON FITTING PRIOR TO WINDING WITH CHEMLOK 205 (PRIMER) & 220 (ADHESIVE)
2. ESTIMATED VESSEL WT. WITHOUT ELASTOMERIC LINER IS 1.85 LBS.
3. ALL DIMENSIONS ARE ON MANDREL
4. ALL DIMENSIONS IN INCHES

FIG. 2 BRUNSWICK PRESSURE VESSEL DESIGN

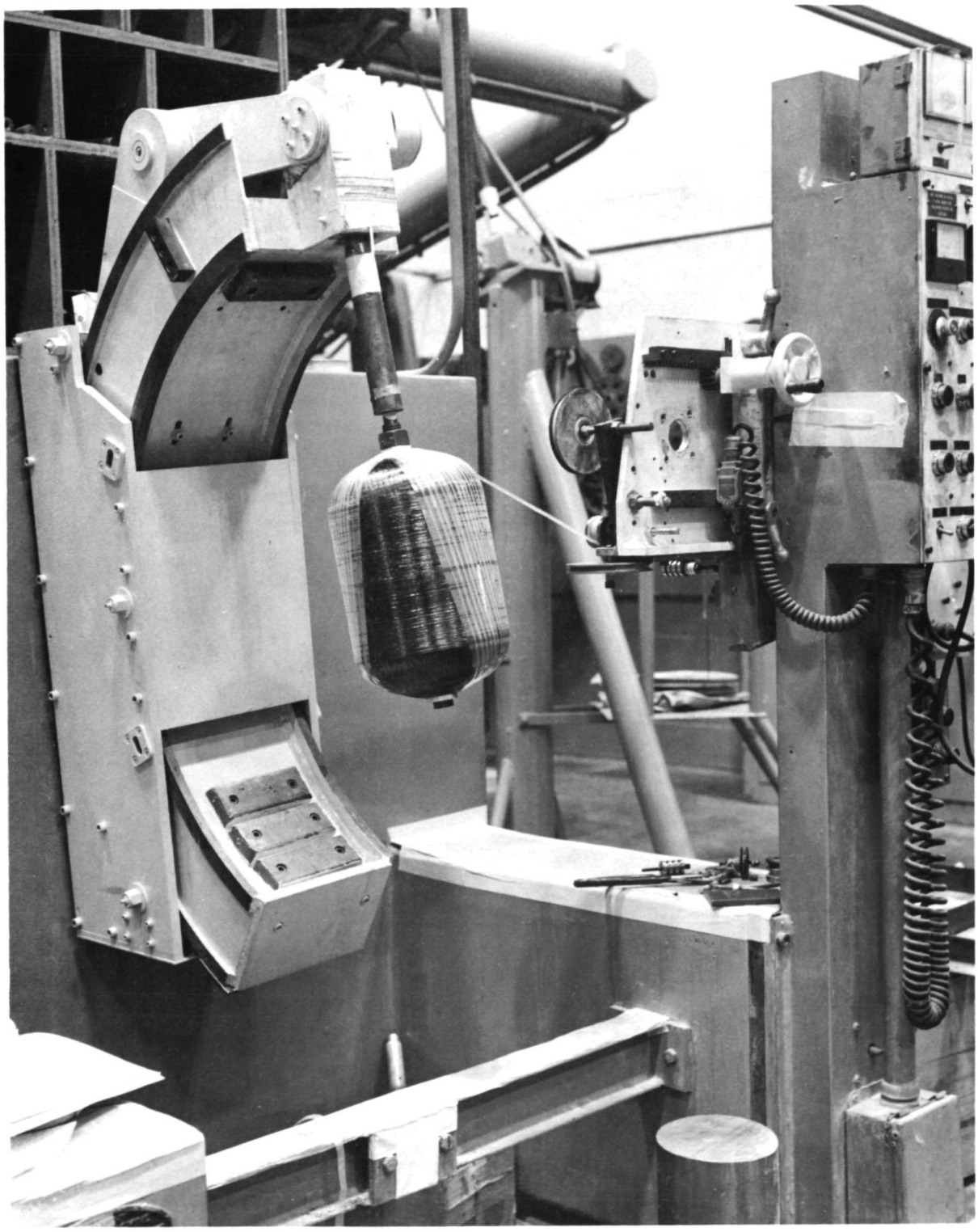

Shrink Tape Being Applied To Vessel After
Completion Of Filament Winding

FIG. 3 BRUNSWICK IN-PLANE WINDING MACHINE

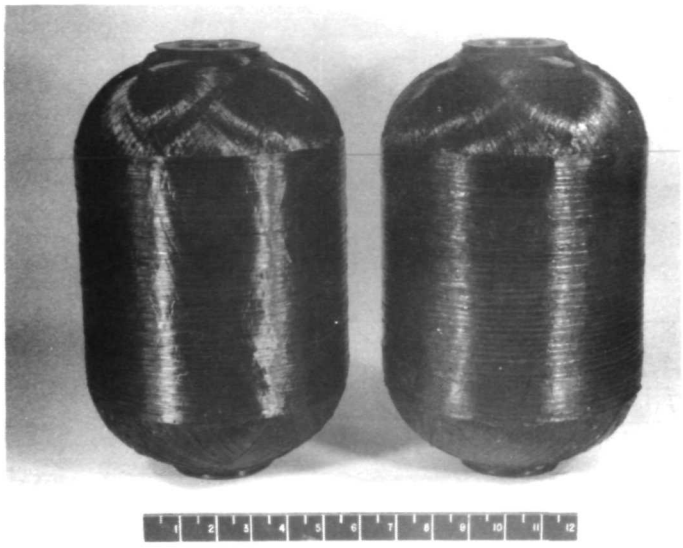

Thornel 400 Filament Wound/Epoxy Vessels

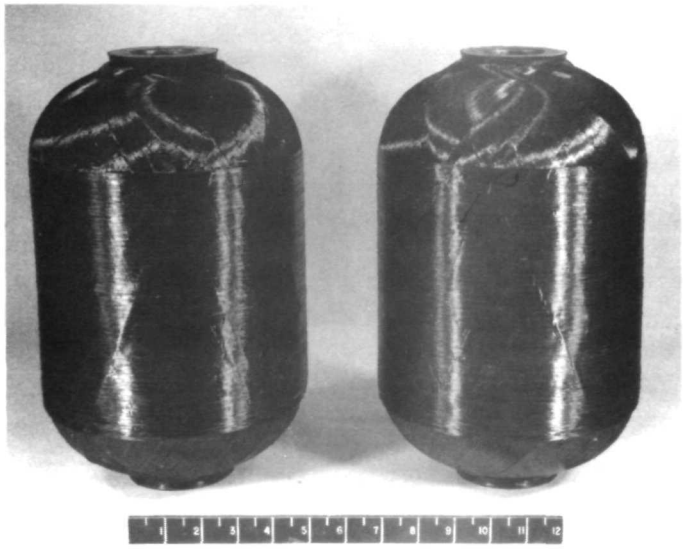

Thornel 75 Filament Wound/Epoxy Vessels

FIG. 4 HERCULES CARBON FIBER REINFORCED PRESSURE VESSELS

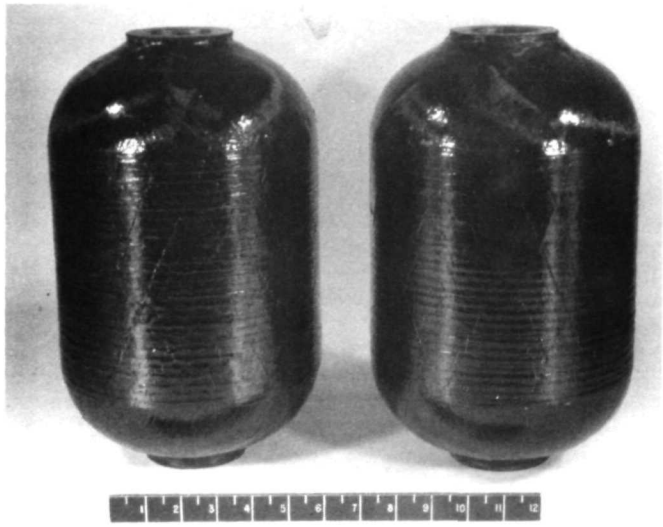

HTS Filament Wound/Epoxy Vessels

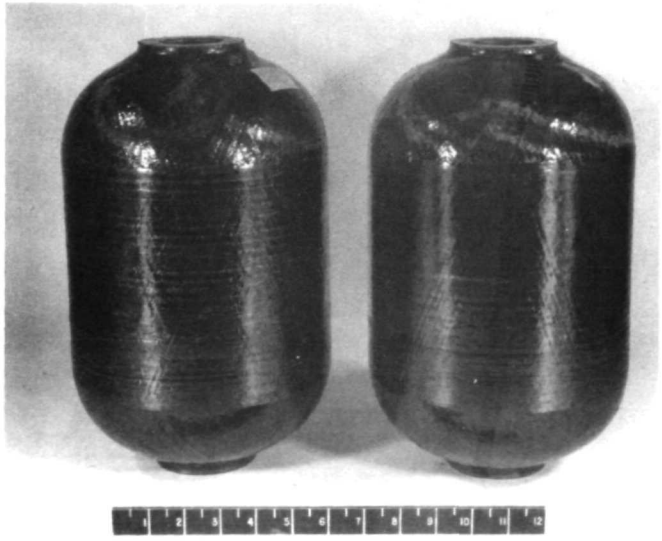

Type A Filament Wound/Epoxy Vessels

FIG. 5 HERCULES CARBON FIBER REINFORCED PRESSURE VESSELS

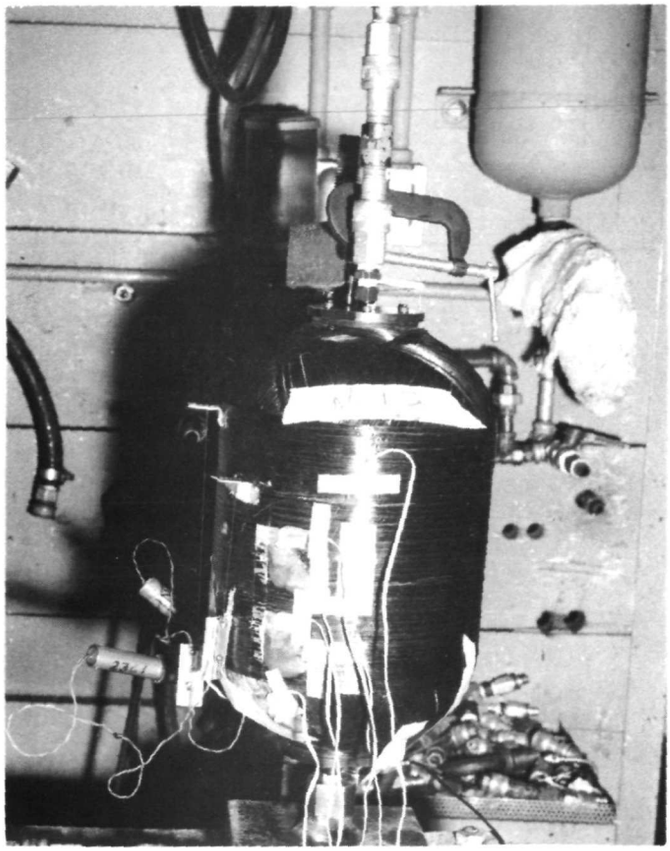

Instrumented Vessel In Test Stand Showing Showing Gages Attached

FIG. 6 HERCULES VESSEL READY FOR TESTING

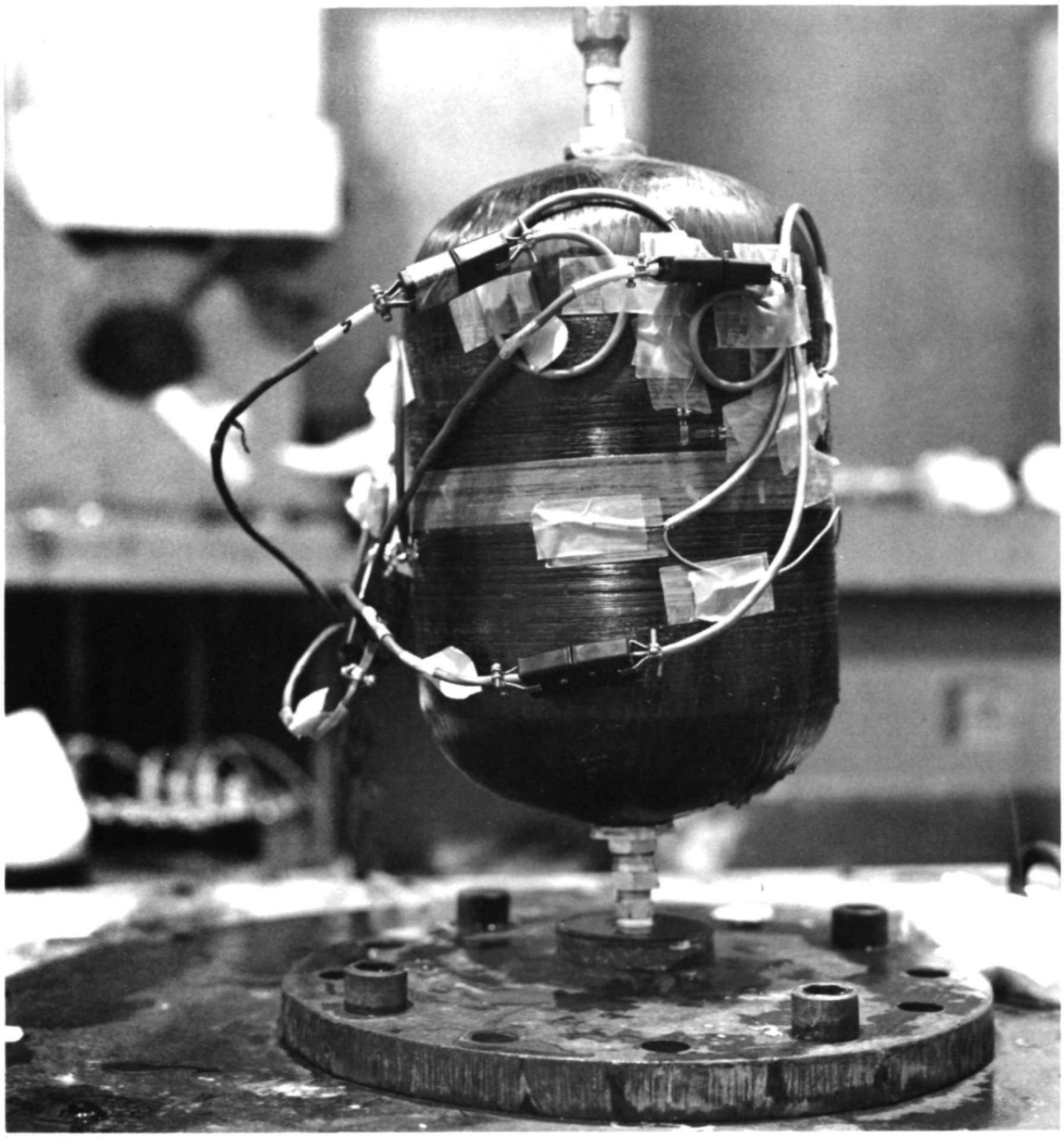

Instrumented Vessel In Test Stand Showing Strain Gages Attached

FIG. 7 BRUNSWICK VESSEL READY FOR TESTING

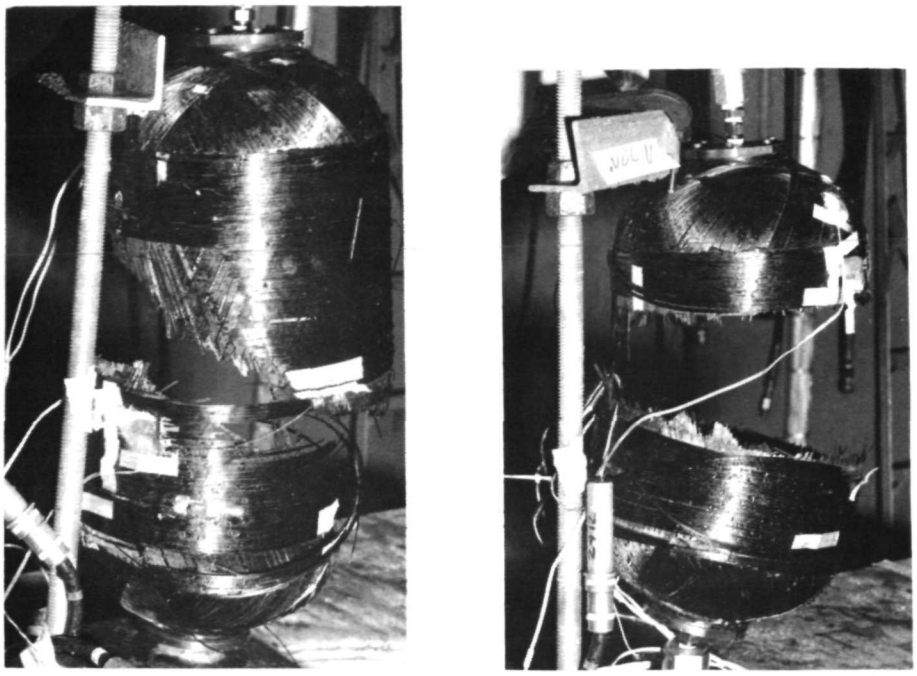

Vessels Reinforced With Thornel 400 Fiber

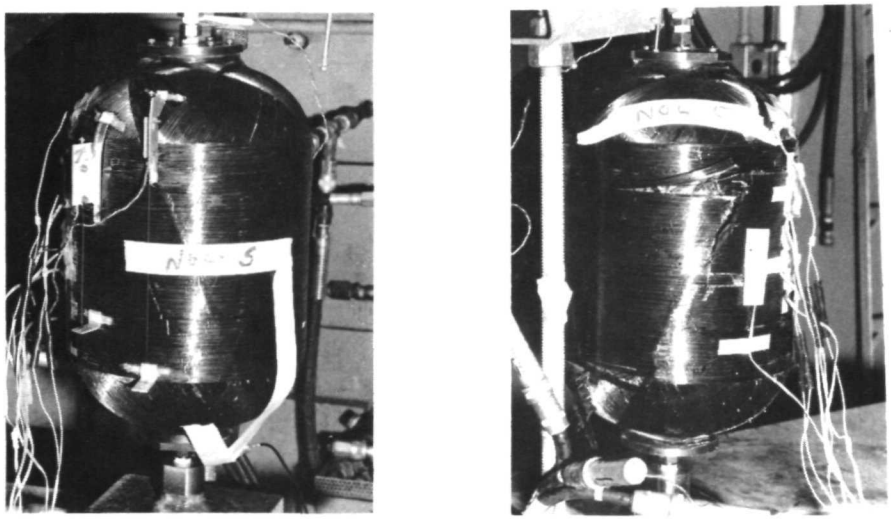

Vessel Reinforced With Thornel 75 Fiber - Two Views

FIG. 8 HERCULES VESSELS AFTER PRESSURE TESTING

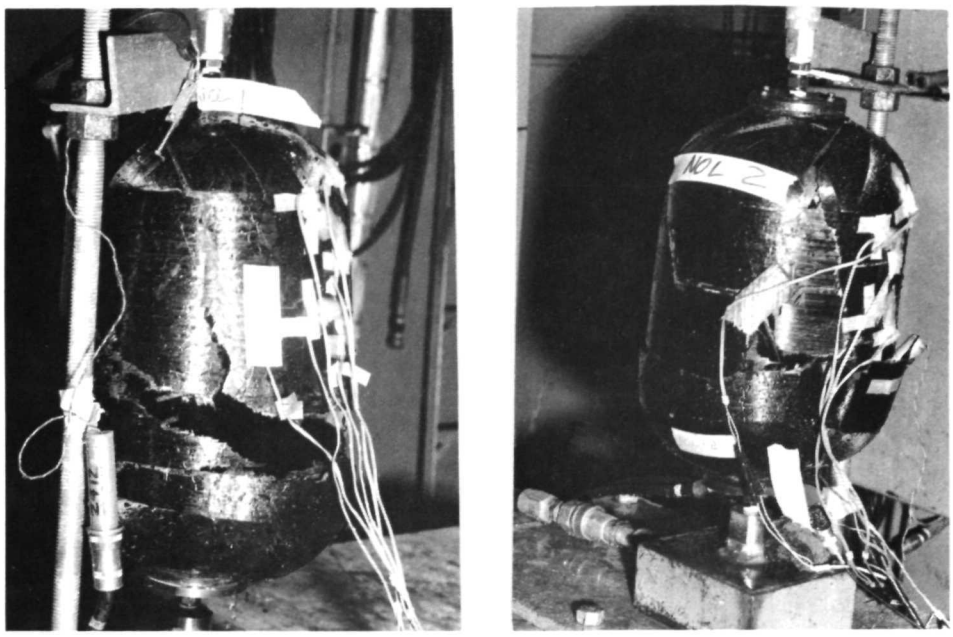

Vessels Reinforced With HTS Fiber

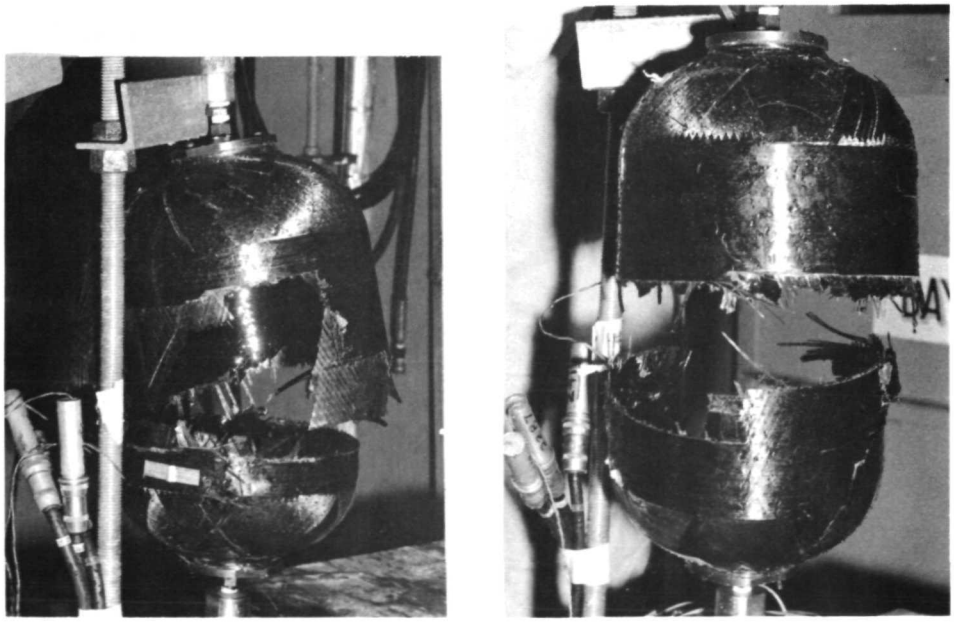

Vessels Reinforced With Type A Fiber

FIG. 9 HERCULES VESSELS AFTER PRESSURE TESTING

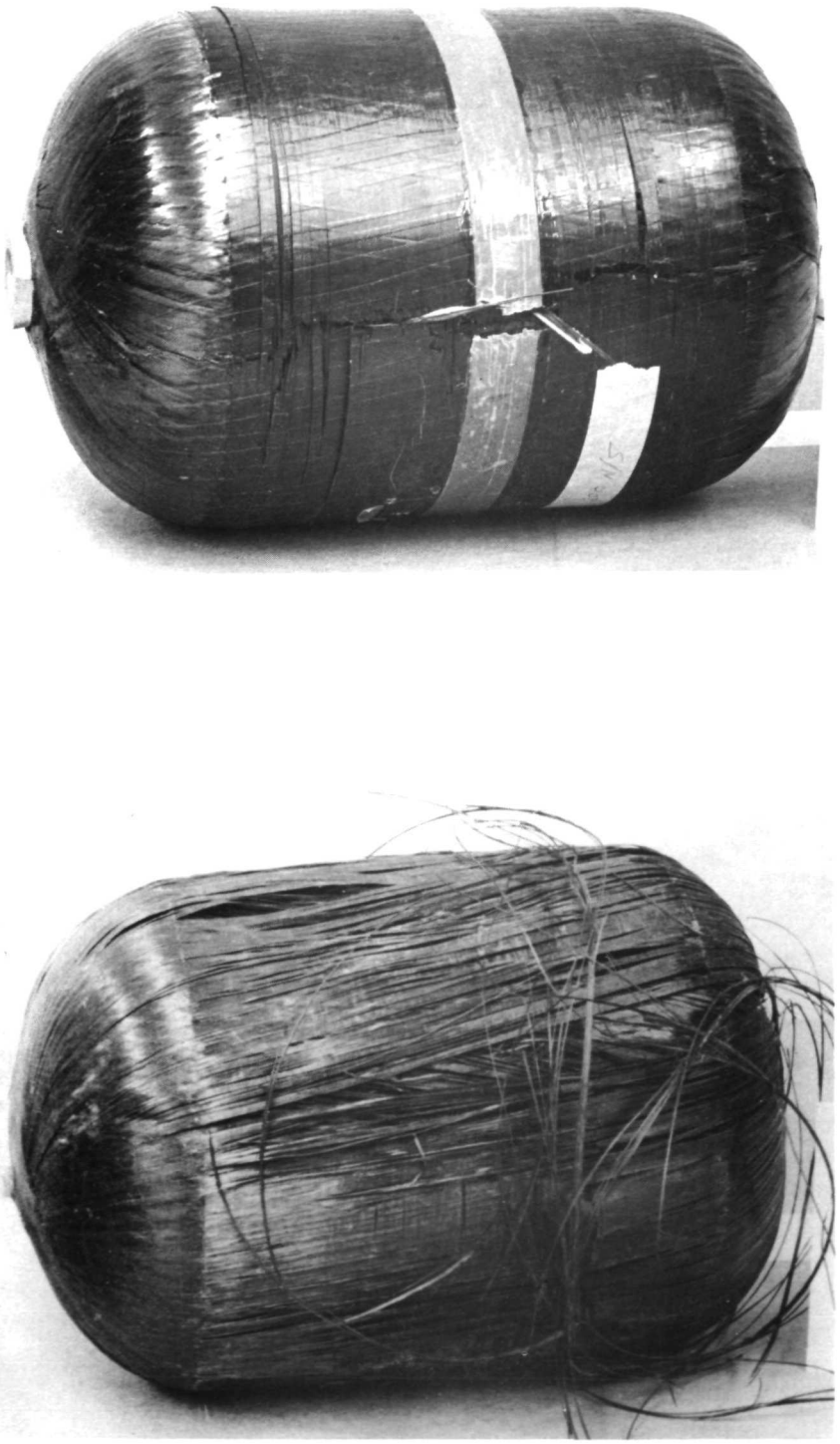

Vessels Reinforced With Thornel 400 Fiber

FIG. 10 BRUNSWICK VESSELS AFTER PRESSURE TESTING

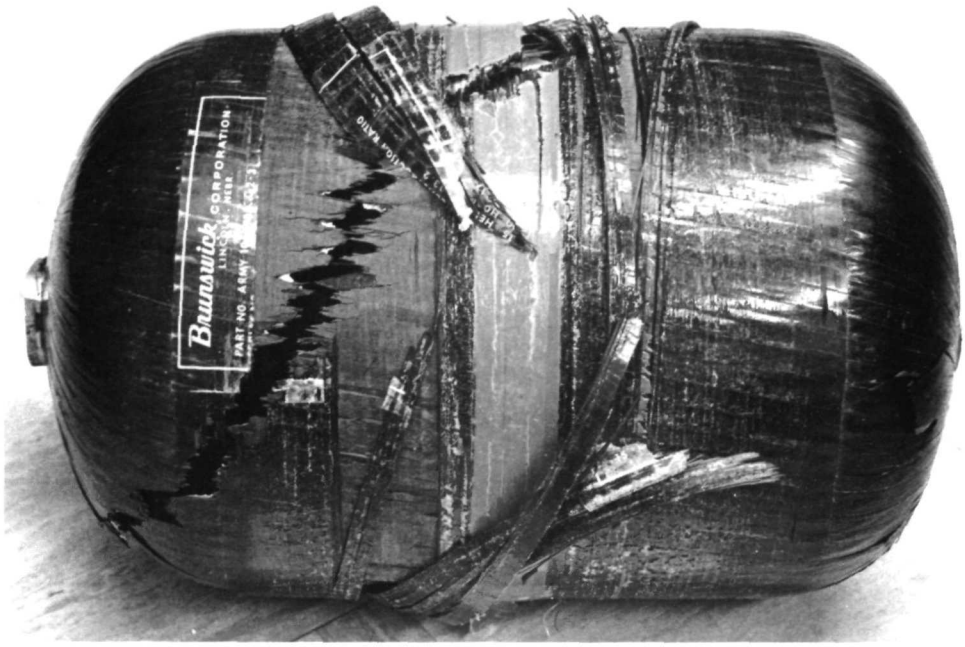

Vessel Reinforced With HTS Fiber
(with attached label left from Army contract)

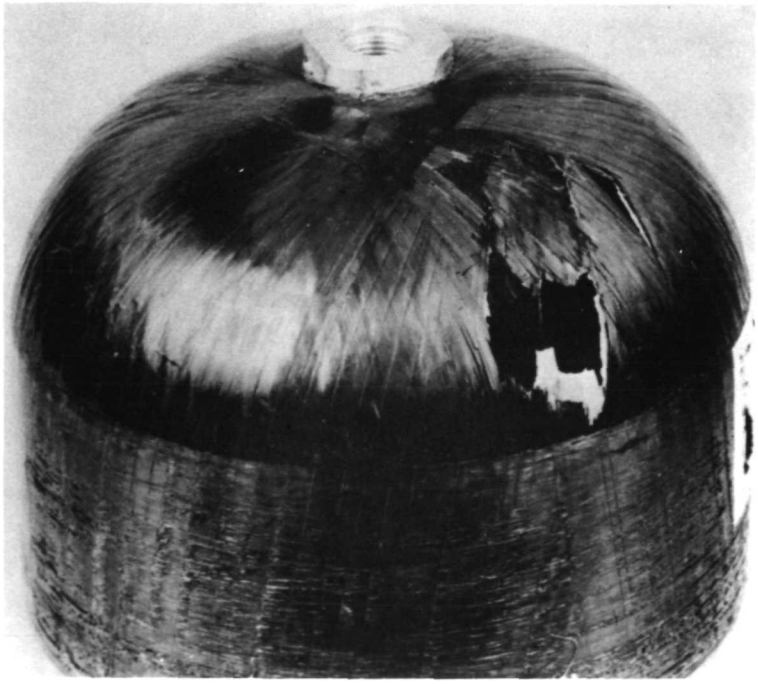

Vessel Reinforced With Thornel 75 Fiber

FIG. 11 BRUNSWICK VESSELS AFTER PRESSURE TESTING

Showing Waviness In Hoop Winds

FIG. 12 BRUNSWICK VESSEL

APPENDIX A

PROPERTIES OF SUPPLIED FIBER

The carbon fiber was supplied to both contractors by NOL except for the Type A fiber used by Hercules. The following table gives information on these fibers:

Fiber	Mfrs Lot No.	Mfrs Stated Strength 10^3n/cm^2	Mfrs Stated Strength 10^3psi	Mfrs Stated Modulus 10^6n/cm^2	Mfrs Stated Modulus 10^6psi	Fiber wgt Kg	Fiber lgth meters	Assigned To
Thornel 400 30-1/0 Grade WYM Finish UC 307	TY301811	294	427	26	37	0.464	8120	Hercules
	301812	293	424	26	37	0.464	8.77	"
	302514	297	431	23	34	0.455	8017	"
	302511	288	417	24	35	0.441	7998	"
	302015	288	418	23	34	0.450	7993	"
	TY302013	315	457	23	34	0.459	8144	Brunswick
	300712	286	414	23	34	0.445	8261	"
	302012	293	424	25	36	0.455	7975	"
	293011	290	420	24	35	0.441	8092	"
	291715	308	446	23	34	0.473	8167	"
Thornel 75 Grade WYL 160½ Finish UC 307	412310-1	243	352	55	79	0.400		Hercules
	408041-2	273	396	51	74	0.459		"
	408041-1	273	396	51	74	0.468		"
	407301-1	267	387	53	77	0.464		"
	408021-1	279	405	53	77	0.482		"
	406181-1	264	383	50	73	0.227		Brunswick
	412170-1	269	390	54	78	.491		"
	103231-1	288	417	53	77	.604		"
	601061-1	257	373	50	73	.472		"
	408031-1	275	399	50	73	.477		"
HTS	2-2/50	242	350	25-29	36-42	0.168	198	Hercules
	2-2/34#2	Minimum	Minimum			0.195	230	"
	2-2/98					0.255	299	"
	2-2/90					0.145	171	"
	2-2/21					0.418	491	"

Fiber	Mfrs Lot No.	Mfrs Stated Strength	Mfrs Stated Modulus	Fiber wgt	Fiber lgth	Assigned To
HTS	2-2/79A			0.182	213	Hercules
	2-2/21			0.127	149	"
	2-2/21			0.445	523	"
	2-2/40			0.223	262	"
	2-2/56			0.114	134	"
	2-2/11B			0.441	518	Brunswick
	2-2/17			0.168	198	"
	2-2/34			0.118	139	"
	2-2/34			0.164	192	"
	2-2/55			0.209	245	"
	2-2/8A			0.109	128	"
	2-2/39A			0.191	224	"
	2-2/49			0.523	614	"
	2-2/53			0.355	416	"

APPENDIX B

VESSEL DESIGN, MANDREL FABRICATION, AND VESSEL WINDING

I. Hercules

A. Design

1. A centerport opening of 4.763 cm diameter, or 23.4% of the chamber diameter, was chosen. The reasons were the following:

   (1) a mandrel to accomodate this centerport size was already available;
   (2) performance of the vessel was based on composite weight only. Therefore, a refined design of the centerport adaptors was not needed;
   (3) the dome contour and dome contained volumes were functions of the fiber reversal radius rather than the size of the centerport;
   (4) over a range of 15 to 25 percent of the vessel diameters, the 15% port showed a 1.2% gain in PV/W over the 25% port. This gain was considered to be negligible.

2. The choice of helical winding was for the following reasons:

   (1) a comparison of achievable burst pressures indicates that the helical pattern would demonstrate a 3.2% greater efficiency than the in-plane configuration for the pressure vessel;
   (2) the dome contours and filament winding paths for the helical pattern design are based upon the geodesic path definition that any filament path along the surface of the vessel is the shortest distance between any two points on the surface. This pattern places the filaments in pure tension and is the most stable winding geometry with little or no chance of fiber slippage on the mandrel.

II. Mandrel Fabrication

A. Pole Piece Preparation

1. Grit blast winding surfaces of the pole piece with 10 to 14 n/cm^2 (20 psig) air pressure and 100 Grit Aluminum Oxide.

2. After grit blasting thoroughly, air blast the pole pieces to remove all grit blasting material.

3. Apply one coat of primer to the grit blasted area of the pole pieces and allow to air dry for 15 minutes minimum.

4. Apply one coat of adhesive to the primed area and allow to air dry for 15 minutes minimum.

5. Record weight of each pole piece.

6. Package pole pieces in polyethylene bag for storage until use.

B. Salt Mandrel Manufacture

1. Machine blocks of sodium chloride to form the desired cylindrical section. Machine dome contour blocks and bond to the cylindrical section.

C. Chlorobutyl Rubber Application

1. Assemble threaded rod attachment through pole pieces to provide a handle for dipping the mandrel.

2. Mix chlorobutyl rubber with toluene to provide a solution. The mixture should be covered when not in use to prevent toluene evaporation.

3. Slowly immerse the bottle in the mix until the entire bottle is covered. Slowly remove and hang on the drying rack letting the excess mix drip back into the can. Remove air bubbles and allow rubber to dry.

4. Repeat dipping operations to provide a vessel liner of approximately 0.050 cm thickness.

5. Allow rubber liner to dry at 52° to 66°C.

6. After trimming rubber from pole pieces, units are stored in polyethylene for protection.

III. Vessel Winding

Measure and record mandrel diameter, length and weight.

Collect sample of fiber from each spool.

Assemble winding adapters to rubber lined mandrel and mount in the Entec machine.

Clean mandrel winding surface with a trichloroethylene dampened cloth.

Set resin cup temperature to 32 ±2°C.

Mix resin at room temperature using 125 grams of Epon 828, 145 grams of DSA, 25 grams of Empol 1040 and 1.25 grams of BDMA. Fill preheated resin cup. Measure time after resin mixing and change resin every three hours rechecking resin flow rate after each change.

Turn on the counter and collect resin for 100 counts at a slow pump rotation. Weigh and record in the M&IR. Mount a spool of HT graphite tow on the back of the carriage, turn on the automatic pay out system and feed into the special delivery system.

Set the tension to 5.9 Kg and adjust machine to wind the first 23° helix with 0.50 cm band width.

Coat the winding surface with a very thin coat of room temperature resin mix. Weigh and record resin used.

Turn on the revolution counter, circuit counter, the motor switch to Reverse, and set the two counters on the delivery system to zero.

Wind 23° helical until counters shut off. Then complete the circuit to the headstock. Record the delivery counter readings and reset to zero.

Wind hoop layer as shown in Drawing 60291S10002 with 0.635 cm band width. Record the delivery counter readings and reset to zero.

Place helical cutting guide on cylindrical section of the vessel. Wind second 23° helical layer for dome reinforcement and cut out cylindrical portion of the helical layer 2.5 cm from dome tangency point. Exercise care to not damage layers when cutting. Weigh material removed.

Continue winding to complete vessel configuration.

Place in an air circulating oven and rotate.

Gel for eight hours ±1 hour at 52 ±9°C oven air temperature, check for air bubble protrusion and smooth down lightly every half-hour.

Cure for two hours at 66 ±9°C followed by four hours at 149 ±9°C. Raising of temperature should be done over a 1/2 to one-hour period uniformly. (Four hour cure ±1/4 hour.)

Cool slowly to room temperature. The unit may be removed from the oven for cooling.

Remove winding tooling and weigh unit.

Wash out salt mandrel with warm water and dry the vessel prior to taking final weight and measuring water volume.

Provide Epon 946 water barrier coat.

Clean up and prepare for hydrotest.

A. Winding Thornel Vessels

1. Thornel vessels were wound using the procedures detailed above with the following exceptions:

(1) The resin applicator was removed.

(2) Bandwidth for helicals and hoops was 0.445 cm for Thornel 400 and 0.382 cm for Thornel 75.

(3) The gel temperature application was eliminated.

(4) The Thornel 400 vessel consisted of two helical layers and $2\frac{1}{2}$ hoop layers.

(5) The Thornel 75 vessel consisted of two helical layers and $2\frac{1}{2}$ hoop layers.

(6) None of the Thornel vessels had dome reinforcement.

(7) Tension for Thornel 75 was from 1.4-1.8 Kg. Tension for NOL 3 and 4 was 3.2 and 5.9 Kg, respectively.

IV. Brunswick

A. Mandrel Fabrication

1. Sand mandrels were cast in cylindrical sheet metal molds with the polar bosses and wind axis in place. Each sand and water-soluble binder mixture was oven cured, and following cure, the metal sleeve molds were removed. The assemblies were then machined to the final contour in a tracer lathe.

2. Following the sand machining operation, each polar boss was removed from the assembly and prepared for rubber shear ply installation. An uncured rubber spacer, (0.038 cm thick) was installed over each boss. Upon completion of this operation, each mandrel was covered with a thin FEP film layer to prevent the sand mandrel from coming in direct contact with the impregnated roving. The polar bosses were reinstalled on the mandrel and wind axis assemblies. The mandrels were then ready for winding.

B. Vessel Winding

1. Each mandrel was installed in a "tumble" winding machine. This winding machine has the advantage of a stationary delivery system which allows the tapes to remain in a single plane during the winding operation. Prior to winding, pi-tape measurements were recorded for the cylindrical regions of each mandrel.

2. Trial winding was required for each vessel to ensure that all winding criteria could be achieved. The winding tensions in each tape were achieved by varying the current in the magnetic drag pullies positioned within the tape delivery system. The tensioning system allowed for a minimum amount of tension to be placed on the tape package, while the winding tension for each tape was increased in discrete steps as it passed over 20 cm diameter pullies arranged on a vertical plate. The wind tensions used for each vessel, as measured at the lead-off pulley, were set at 3.6 Kg for each polar tape and 4.1 Kg and 4.5 Kg for the first and second hoop layers respectively.

3. Upon completion of each winding operation, the cylinder diameter was again measured and recorded to give an indication of the total composite wall thickness. Each vessel was then over-wrapped with 1.3 cm wide shrink tape applied at a tension of 0.4 to 0.8 Kg. The HTS and Thornel 75 vessels had shrink tape applied in the polar direction only, whereas all Thornel 400 vessels had both polar and circumferential shrink tape coverage. Figure 2 shows shrink tape being applied.

4. Each of the six vessels initially fabricated were placed in an oven and cured according to the following cure cycle:

(1) Place in preheated oven at 66 ±6°C

(2) Raise oven temperature to 93 ±8°C in ½ hour

(3) Hold at 93 ±8°C for two hours

(4) Raise oven temperature to 149 ±8°C in ½ hour

(5) Hold at 149 ±8°C for four hours

(6) Slowly cool to 60°C maximum before removing vessel from oven.

It was found that the Thornel vessels were sufficiently soft following mandrel wash-out to permit a slight relative displacement of the polar boss through normal handling. The polar boss displacement on one Thornel 400 vessel was so severe that the decision was made to remake the Thornel 400 vessels with an extended cure cycle to ensure that the resin system had cured sufficiently. The cure cycle selected by Brunswick which was used for the remade vessels was as follows:

(1) Place in preheated oven at 66°C

(2) Raise oven temperature to in ½ hour

(3) Hold at 107 ±6°C for two hours

(4) Raise oven temperature to 163 in ½ hour

(5) Hold at 163 ±6°C for four hours

(6) Raise oven temperature to 171°C in ½ hour

(7) Hold at 171 ±6°C for four hours

(8) Set oven temperatures at 125°C for 1½ hours

(9) Set oven temperature at 93°C for 1½ hours

(10) Turn off oven, keep doors closed for 1½ hours

(11) Do not remove until surface temperature reaches 71°C or lower

It was found that the remade Thornel vessels were more rigid than those initially fabricated; however, the composite was less rigid than the Courtaulds HTS vessels which were fabricated with the shorter cure cycles.

5. Following vessel cure, shrink tape removal and mandrel wash-out, each vessel was subjected to a dimensional inspection. The physical characteristics measured for each vessel are presented in Table II.

6. Prior to vessel testing, liners were cast inside the vessels by applying several thin coats of TURCO 5145 chem-mill masking.

NOLTR 73-60
DISTRIBUTION LIST

	Copies
NASA-Lewis Research Center 21000 Brookpark Road Cleveland, OH 44135 Attn: Contracting Officer, MS 500-313 Tech. Report Control, MS 5-5 Technical Utilization, MS 3-16 AFSC Liaison, MS 501-3 Library, MS 60-3	2
Rel. & Quality Assur., MS 500-111 R. H. Kemp, MS 49-3 R. F. Lark, MS 49-3	10
J. R. Faddoul, MS 49-3 N. T. Musial, MS 500-311 J. C. Freche, MS 49-1 R. H. Johns, MS 49-3 G. M. Ault, MS 3-5	
National Aeronautics and Space Administration Office of Advanced Research and Technology Washington, DC 20546 Attn: RW/G. C. Deutsch RW/J. J. Gangler RW/B. Achhammer RWS/L. A. Harris	
National Aeronautics and Space Administration Office of Tech. Utilization Washington, DC 20546	
NASA-Langley Research Center Hampton, VA 23365 Attn: E. E. Mathauser, MS 188A R. A. Pride, MS 188A R. A. Anderson, MS 188 R. W. Leonard, MS 188 Library	
NASA-George C. Marshall Space Flight Center Huntsville, AL 35812 Attn: Library J. M. Stuckey, S&E-ASTN-MNM D. D. Thompson, S&E, ASTN-PPA H. M. Walker, S&E-PP-MXS E. E. Engler, S&E-ASTN-ES C. E. Cataldo, S&E-ASTN-MX	

DISTRIBUTION LIST, Contd.

	Copies
NASA-Lyndon B. Johnson Space Center Houston, TX 77001 Attn: Library R. L. Johnston, SMD-ES5 R. E. Johnson, SMD-ES5 S. Glorioso, SMD-ES52 D. Kendrick, PPD-EP42 R. N. Prince, CSD-EC3 L. G. St. Leger, ES	
NASA-Ames Research Center Moffett Field, CA 94035 Attn: Library	
NASA-Flight Research Center P. O. Box 273 Edwards, CA 93523 Attn: Library	
NASA-Goddard Space Flight Center Greenbelt, MD 20771 Attn: Library	
NASA Scientific and Tech. Info. Facility P. O. Box 33 College Park, MD 20740 Attn: Acquisitions Branch	10
National Tech. Information Service Springfield, VA 22151	6
Jet Propulsion Laboratory 4800 Oak Grove Drive Pasadena, CA 91103 Attn: Library E. Y. Robinson Warren Jensen	
Air Force Materials Laboratory Wright Patterson Air Force Base Ohio 45433 Attn: J. D. Ray, (LNC) W. H. Gloor, (LNF) H. S. Schwartz, (LN) R. T. Schwartz, (LN) G. P. Peterson, (LC) W. J. Schulz, (LC) E. Jaffe, (LC) LT S. Litvak (LTF) LA A. Olevitch	

DISTRIBUTION LIST, Contd.

Copies

Air Force Flight Dynamics Laboratory
Wright Patterson Air Force Base
Ohio 45433
Attn: N. S. Khot, AFFDL, (FBC)
R. D. Joblove, AFFDL, (FBC)

Air Force Office of Scientific Research
1400 Wilson Boulevard
Arlington, VA 22209
Attn: SIGL

Air Force Rocket Propulsion Laboratory
Edwards, CA 93523
Attn: J. Branigan

Air Force Office of Scientific Research
Washington, DC 20333
Attn: SREP, J. F. Masi

Space and Missile Systems Organization
Air Force Unit Post Office
Los Angeles, CA 90045
Attn: Technical Data Center

United States Air Force
Washington, DC 20315
Attn: Library
AFRST/Col. C. K. Stambaugh

Defense Metals Information Center
Battelle Memorial Institute
Columbus Laboratories
505 King Avenue
Columbus, OH 43201

U. S. Army Missile Command
Redstone Scientific Information Center
Redstone Arsenal, AL 35808
Attn: Document Section

Advanced Research Projects Agency
Washington, DC 20525
Attn: Library

Department of the Army
U.S.Army Material Command
Washington, DC 20315
Attn: AMCRD-RC

DISTRIBUTION LIST, Contd.

	Copies
Department of the Army U. S. Army Aviation Materials Lab. Fort Eustis, VA 23604 Attn: A. J. Gustafson R. Berrisford	
Department of the Army U. S. Army Aviation Systems Command P. O. Box 209 St. Louis, MO 63166 Attn: R. Vollmer, AMSAV-A-UE	
Department of the Army Watertown Arsenal Watertown, MA 02172 Attn: A. Thomas	
Department of the Army Watervliet Arsenal Watervliet, NY 12189 Attn: F. W. Schmiedershoff	
Department of The Army Plastics Technical Evaluation Center Picatinny Arsenal Dover, NJ 07801 Attn: A. M. Anzalone	4
Commander Natick Laboratories U. S. Army Natick, MA 01762 Attn: T. Ciavarini	
Department of The Army Redstone Arsenal Huntsville, AL 35809 Attn: R. J. Thompson, AMSMI-RSS	
U. S. Army Materials & Mechanics Research Center Watertown Arsenal Attn: S. Arnold Watertown, MA 02192	

DISTRIBUTION LIST, Contd.

Copies

Commander
Naval Air Systems Command
U. S. Navy Department
Washington, DC 20361
Attn: AIR-320A (T. Kearns)
AIR-52032A (C. Bersch)
AIR-52032D (M. Stander)

Commander
Naval Ordnance Systems Command
U. S. Navy Department
Washington, D. C. 20360
Attn: ORD-033 (B. Drimmer)
ORD-033A (M. Kinna)
ORD - 0632

Director
Deep Submergence Systems Project
6900 Wisconsin Avenue
Washington, DC 20015
Attn: DSSP-221 (H. Bernstein)

Department of The Army
Picatinny Arsenal
Dover, NJ 07801
Attn: C. Wright

Director
Naval Research Laboratory
Washington, DC 20390
Attn: Code 8430
Dr. I. Wolock, Code 8433

Department of the Navy
Office of Naval Research
Washington, DC 20360
Attn: Code 472 (Dr. G. Neece)

Commander
Naval Ship R&D Center
Code 5642
Bethesda, MD 20034
Attn: C. Hershner (2724)

AVCO Corporation
Applied Technology Division
Lowell Industrial Park
Lowell, MA 01851
Attn: Mr. Allan S. Bufferd

DISTRIBUTION LIST, Contd.

Copies

Aeronutronic Division of Philco Ford Corporation
Ford Road
Newport Beach, CA 92663
Attn: Technical Information Dept.

Bell Aerospace Company
Box 1
Buffalo, NY 14205
Attn: S. Cross

Bell Helicopter Company
P. O. Box 482
Fort Worth, TX 76101
Attn: H. Zinberg

Brunswick Corporation
Defense Products Division
P. O. Box 4594
43000 Industrial Avenue
Lincoln, NB
Attn: J. Carter

The Boeing Company
Vertrol Division
Morton, PA 19070
Attn: W. D. Harris
R. Pickney

The Boeing Company
P. O. Box 3999
Seattle, WA 98124
Attn: J. T. Hoggatt, MS 88-33

Chemical Propulsion Information Agency
Applied Physics Laboratory
8621 Georgia Avenue
Silver Spring, MD 20910

Esso Research and Engineering Co.
P. O. Box 45
Linden, NJ 07036
Attn: D. J. Angier

Fairchild Hiller Corporation
Republic Avaiation Division
Farmingdale, NJ 11735
Attn: J. Clark
F. Damasco

Copies

The Fiberite Corporation
512 W. Fourth Street
Winona, MN 55987
Attn: S. P. Prosen

FMC Corporation
Chemical Research & Development Center
P. O. Box 8
Princeton, NJ 08540
Attn: Security Officer

General Dynamics/Convair
P. O. Box 1128
San Diego, CA 92112
Attn: J. L. Christian

Grumman Aerospace Corporation
Bethpage, Long Island, NY 11714
Attn: B. Aleck

General Dynamics
P. O. Box 748
Fort Worth, TX 76100
Attn: W. S. Hay
T. P. Airhart

Hercules, Inc.
Allegheny Ballistics Laboratory
P. O. Box 210
Cumberland, MD 21052
Attn: W. T. Freeman

Hercules, Inc.
Wilmington, DE 19899
Attn: G. Kuebeler

IIT Research Institute
Technology Center
Chicago, IL 60616
Attn: Library

Johns Hopkins University
Applied Physics Laboratory
8621 Georgia Avenue
Silver Spring, MD 20910
Attn: Dr. J. George

Ling-Temco-Vought Corporation
P. O. Box 5003
Dallas, TX 75222
Attn: M. Pollos

DISTRIBUTION LIST, Contd.

Copies

Lockheed/California Corporation
Burbank, CA 91503
Attn: M. G. Childers

Lawrence Livermore Laboratory
P. O. Box 808 L-421
Livermore, CA 94550
Attn: T. T. Chiao

Lockheed-Georgia Company
Advanced Composites Information Center
Dept. 72-14, Zone 402
Marietta, GA 30060

Marquardt Corporation
16555 Saticoy Street
Van Nuys, CA 91406
Attn: J. F. Dolowy

Massachusetts Institute of Technology
Cambridge, MA 02139
Attn: Prof. F. J. McGarry

McDonnell Douglas Aircraft Corporation
3855 Lakewood Blvd.
Long Beach, CA 90810
Attn: H. C. Schjelderup

Lockheed Missiles & Space Company
P. O. Box 504
Sunnyvale, CA 94087

McDonnell Douglas Aircraft Corp.
P. O. Box 516
Lambert Field, MS 63166
Attn: J. C. Watson

North American Rockwell, Inc.
4300 E. Fifth Street
Columbus, OH 43219
Attn: R. L. Foye

Northrop Space Laboratories
3401 West Broadway
Hawtherne, CA 90250
Attn: D. Stanbarger

DISTRIBUTION LIST, Contd.

	Copies
North American Rockwell Corporation Space Division 12214 Lakewood Blvd. Downey, CA 90241 Attn: Max Nabler Larry Korb	
Structural Composites Industries, Inc. 6344 North Irwindale Avenue Azusa, CA 91702 Attn: E. E. Morris	
United Aircraft Corporation Corporation Library 400 Main Street East Hartford, CT 06108	
United Aircraft Corporation United Technology Center Division P. O. Box 358 Sunnyvale, CA 94088 Attn: S. M. Jacobs	
Fiber Science, Inc. 245 East 157th Street Gardena, CA 90248 Attn: L. J. Ashton	
Eimcomet Plastics Div. Envirotech Corporation 669 W. Second South Salt Lake City, Utah 84110 Attn: Dr. J. V. Larsen	
Defense Documentation Center Cameron Station Alexandria, VA 22314	12
Commander, Naval Ship Engineering Center Prince Georges Center Hyattsville, Maryland 20782 Code 6101E03 (W. Graner) 6101E03 (T. White) 03421 (C. Pohler)	

UNCLASSIFIED

Security Classification

DOCUMENT CONTROL DATA - R & D

(Security classification of title, body of abstract and indexing annotation must be entered when the overall report is classified)

1. ORIGINATING ACTIVITY *(Corporate author)* Naval Ordnance Laboratory, Silver Spring, Maryland 20910	2a. REPORT SECURITY CLASSIFICATION Unclassified 2b. GROUP

3. REPORT TITLE

Carbon Fiber Internal Pressure Vessels

4. DESCRIPTIVE NOTES *(Type of report and inclusive dates)*

5. AUTHOR(S) *(First name, middle initial, last name)*

Robert A. Simon

6. REPORT DATE 17 July 1973	7a. TOTAL NO. OF PAGES 31	7b. NO. OF REFS 5
8a. CONTRACT OR GRANT NO. NASA Defense Purchase Request b. PROJECT NO. C-10360 B c. d.	9a. ORIGINATOR'S REPORT NUMBER(S) NOLTR 73-60 9b. OTHER REPORT NO(S) *(Any other numbers that may be assigned this report)* NASA CR-121138	

10. DISTRIBUTION STATEMENT

Approved for public release; distribution unlimited

11. SUPPLEMENTARY NOTES	12. SPONSORING MILITARY ACTIVITY National Aeronautics & Space Administration, Lewis Research Center, Cleveland, Ohio 44135

13. ABSTRACT

Internal pressure vessels were designed, filament wound of carbon fibers and epoxy resin and tested to burst by two contractors, Hercules, Incorporated, Cumberland, Maryland, and the Brunswick Company, Lincoln, Nebraska. The fibers used were Thornel 400, Thornel 75 and Hercules HTS. In addition, Hercules fabricated additional vessels with their Type A fiber. Polymeric liners were used, and all burst testing was done at room temperature. The objective was to produce vessels with the highest attainable PV/W efficiencies. The Type A vessels by Hercules showed the highest average efficiency: 2.56×10^6 cm. Next highest efficiency was with Thornel 400 vessels by Hercules: 2.21×10^6 cm.

These values compare favorably with efficiency values from good quality S-glass vessels, but strains averaged 0.97% or less, which is less than 1/3 the strain of S-glass vessels. Thus, the carbon fiber vessels are strain compatible with some liner materials at cryogenic temperatures, whereas the S-glass vessels generally are not. Efficiencies of the carbon fiber vessels were up to 60% higher than values for present metal vessels. Use of the carbon fiber vessels offers the potential of saving a significant amount of weight on some spacecraft.

DD FORM 1 NOV 65 1473 (PAGE 1)

S/N 0101-807-6801

UNCLASSIFIED

Security Classification

UNCLASSIFIED
Security Classification

14. KEY WORDS	LINK A ROLE	LINK A WT	LINK B ROLE	LINK B WT	LINK C ROLE	LINK C WT
Internal pressure vessels						
Filament wound						
Carbon fiber						
Save weight						
Epoxy resin						
Glass						
Metal						

DD FORM 1 NOV 65 1473 (BACK)
(PAGE 2)

UNCLASSIFIED
Security Classification

NDW-NOL - 5605/1 (11-72) (TEST)

TO AID IN UPDATING THE DISTRIBUTION LIST
FOR NOL TECHNICAL REPORTS PLEASE COMPLETE
THE FORM BELOW

TO ALL HOLDERS OF NOLTR 73-60
by R. A. Simon, Code 234

A. FACILITY NAME AND ADDRESS *(OLD) (Show Zip Code)*

NEW ADDRESS *(Show Zip Code)*

B. ATTENTION LINE ADDRESSES:

C.

☐ CONTINUE TO SUPPLY THIS FACILITY WITH TECHNICAL REPORTS ON THE SAME SUBJECT.

☐ REMOVE THIS FACILITY FROM THE DISTRIBUTION LIST FOR TECHNICAL REPORTS ON THIS SUBJECT.

D.

NUMBER OF COPIES DESIRED _____

GPO 939-303

NAVY DEPARTMENT
NAVAL ORDNANCE LABORATORY
WHITE OAK, SILVER SPRING, MD. 20910

OFFICIAL BUSINESS
PENALTY FOR PRIVATE USE $300

POSTAGE AND FEES PAID
DEPARTMENT OF THE NAVY
DOD 316

U.S.MAIL

COMMANDER
NAVAL ORDNANCE LABORATORY
WHITE OAK, SILVER SPRING, MARYLAND 20910

ATTENTION: CODE 730/3