N73 32401

USCEE Report 448

CASE FILE COPY

UNIVERSITY OF SOUTHERN CALIFORNIA

MAP SYNCHRONIZATION IN OPTICAL COMMUNICATION SYSTEMS

R. M. Gagliardi
N. Mohanty

Interim Technical Report

April 1973

Department of Electrical Engineering
University of Southern California
Los Angeles, California 90007

ELECTRONIC SCIENCES LABORATORY

USC Engineering

April 1973 USCEE Report 448

Interim Technical Report

MAP SYNCHRONIZATION IN OPTICAL COMMUNICATION SYSTEMS

R. M. Gagliardi
N. Mohanty

Department of Electrical Engineering

University of Southern California

Los Angeles, California 90007

This work was sponsored by the National Aeronautics and Space Administration, under NASA Contract NGR-05-018-104. This grant was part of the research program at NASA's Goddard Space Flight Center, Greenbelt, Maryland.

ABSTRACT

The time synchronization problem in an optical communication system is approached as a problem of estimating the arrival time (delay variable) of a known transmitted field. Maximum aposteriori (MAP) estimation procedures are used to generate optimal estimators, with emphasis placed on their interpretation as a practical system device. Estimation variances are used to aid in the design of the transmitter signals for best synchronization. Extension is made to systems that perform separate acquisition and tracking operations during synchronization. The closely allied problem of maintaining timing during pulse position modulation is also considered. The results of this report have obvious application to optical radar and ranging systems, as well as the time synchronization problem.

Introduction

An important requirement in a successful communication system is to maintain accurate timing between transmitter and receiver. This timing is generally achieved by having the transmitter continually send a known clock signal to which the receiver can synchronize. For the system to be time locked, the receiver synchronization subsystem must determine the exact time at which the clock signal arrives. This measurement of clock arrival time can be considered a measurement of transmission delay time, which can be used to continually adjust the receiver clock relative to that of the transmitter. An analytical approach to the design of synchronization subsystems is to consider this arrival (delay) time measurement as an estimation problem. In this context, optimal estimators for measuring delay can then be implemented as practical devices for achieving synchronization.

In an optical communication system the arrival time measurement is hindered by both the quantum effects of the photodetection operation and by the reception of background noise radiation in the optical antenna. In this report the design of synchronizing subsystems in optical receivers is examined from an estimation point of view. Maximum aposteriori (MAP) estimators of delay are derived for both quantum limited and background additive operation, and their interpretation as practical subsystems are explored.

Problem Formulation

Let the timing information be sent from transmitter to receiver in the form of a known optical field $f(t, \underline{r})$ where $t, \underline{r}$ are the temporal and spatial

variables. The transmitted field is detected by the receiving system shown in Figure 1. A photodetector, having spatial area $\mathcal{A}$ normal to the beam propagation, intercepts the optical field producing the detector output signal x(t). The detected field has the intensity $|f(t-\tau, \underline{r})|^2$ where τ is the time delay during transmission. If we assume the field was transmitted at $t = 0$, then τ is alternatively the time of arrival of the field at the receiver. The detector output x(t) is given mathematically by the shot noise process

$$x(t) = c \sum_{m=0}^{k(0,t)} h(t-t_m) \tag{1}$$

where h(t) is the detector response function, c is a proportionality constant related to electron change and detector impedance, $\{t_m\}$ are the random location terms of the emitted photo electrons, and $k(t_1, t_2)$ is the random number emitted during (t_1, t_2). The latter is called the detected count process and in the absence of background field noise, is known to have a Poisson count probability with intensity parameter

$$m(t_1, t_2) = \int_{t_1}^{t_2} n(t-\tau)dt \tag{2}$$

where

$$n(t-\tau) = \int_{\mathcal{A}} |f(t-\tau, \underline{r})|^2 d\underline{r} \tag{3}$$

α = photodetection parameter

The function n(t) is the spatially integrated field intensity and is called the count intensity function. When bandlimited Gaussian white background

noise is present, the count over (t_1, t_2) is known to have a Laguerre count probability:

$$\text{Prob}[k(t_1, t_2)=k] = \left(\frac{1}{1+N_0}\right)\left(\frac{N_0}{1+N_0}\right)^k L_k^Q\left[\frac{m(t_1, t_2)}{N_0(1+N_0)}\right] \tag{4}$$

where Q is the number of time-space modes observed over (t_1, t_2) and $\mathcal{A}$, and N_0 is the average noise count per mode.

The detector time process x(t) in (1) is then processed in the sync subsystem, herein considered a device that produces an estimate of the arrival time τ. This estimate can then be used to clock all subsequent receiver operations requiring transmitter synchronization (e.g. bit timing, ranging, etc). In typical system operation, this timing must be continually updated and the estimation of τ must be repeated by continually retransmitting the optical field. For this reason the optical field, and therefore the intensity n(t) in (3), is considered a periodic wavefrom in t with repetition period T. A receiver observation of T sec therefore corresponds to one period of the intensity waveform. The estimation problem is therefore one of observing over (0, T) the photo detected output due to repeated optical field producing the count intensity $n(t-\tau)$, and estimating the variable τ. Although we shall concentrate on the estimation problem over a single inverval, the resulting processing may then be repeated over subsequent intervals, making use of earlier estimates. Only maximum aposteriori (MAP) estimates are considered. The procedures of MAP estimation are discussed in References [1-3] , and the specific application to optical systems is reviewed in [4]. The pertinent equations necessary for this report are summarized in the Appendix.

MAP Estimation of Delay

The MAP estimate of τ under Poisson counting follows directly from the Appendix, with τ replacing θ. Since n(t) is periodic with period T, it can be expanded into a Fourier series at harmonics of frequency 1/T, each of which integrates to zero in the third term of (A- 5). Furthermore,

$$\frac{dn(t-\tau)}{d\tau} = -\frac{dn(t)}{dt}\bigg|_{t\to t-\tau} \tag{5}$$

The MAP estimate $\hat{\tau}$ is then that τ for which

$$\max_{\tau}\left[\int_0^T x(t)\log[n(t-\tau)]\,dt + \log p(\tau)\right] \tag{6}$$

or that satisfying

$$\frac{p'(\hat{\tau})}{p(\hat{\tau})} = \int_0^T x(t)\left[\frac{d\log n(t)}{dt}\right]_{t-\hat{\tau}} dt \tag{7}$$

when the intensities are differentiable. The optimal estimator in (6) corresponds to determining the maximum of a bank of crosscorrelations of the detector output with all possible delay shifts of ln n(t), as shown in Figure 2a. Alternatively, the integral can be interpreted as the output at time τ of a passive filter whose input is x(t) and whose impulse response is ln n(-t), as shown in Figure 2b. The filter output at every t is then weighted by log p(t), and the value of t producing the maximum is the MAP estimate of τ.

When $p(\tau)$ is Gaussian with mean m_τ and variance σ_τ^2 then (7) is convenient to use, and takes the form

$$\hat{\tau} = \sigma_\tau^2 \int_0^T x(t) \left[\frac{d \log n(t)}{dt} \right]_{t-\hat{\tau}} dt + \frac{m_\tau}{\sigma_\tau^2} \tag{8}$$

The MAP estimate $\hat{\tau}$ appears on both sides and an explicit solution is not immediately available. However, we can interpret the integral as a correlation of the detector output with a delayed version of the bracketed expression. Hence, the MAP estimate is the value of τ which forces this right hand side to equal $\hat{\tau}$. This suggests an estimator similar to that shown in Figure 2c, employing a feedback loop to generate the proper $\hat{\tau}$ to force the loop to lock in (when $\hat{\tau}$ is correct the output of the correlator is that necessary to maintain the loop). Note the loop involves crosscorrelations with the time derivative of log n(t) and the specific form of the loop signal generator depends upon the transmitted intensity. If n(t) is a pure sinusoidal intensity the feedback loop specializes to the tan-lock loop [4]. If n(t) is periodic, but non-sinusoidal, the form of the MAP estimator loop changes. For example, let

$$n(t) = \frac{\mathcal{E}}{\sqrt{2\pi} D} e^{-(t^2/2D^2)}, \quad -T/2 \le t \le T/2 \tag{9}$$

representing a Gaussian shaped intensity pulse of width D and energy $\mathcal{E}$, extended periodically in time, as in Figure 3a. We assume T is many times larger than D so that the pulse occupies a relatively small portion of the observation interval and end effects can be neglected. For this case,

$$\frac{d \ln n(t)}{dt} = \frac{d}{dt} \left(- \frac{t^2}{2D^2} \right) = - \frac{t}{D} \tag{10}$$

and (8) becomes

$$\frac{\hat{\tau} - m_\tau}{\sigma_\tau^2} = \frac{1}{D^2}\int_0^T x(t)(t-\hat{\tau})dt \tag{11}$$

Hence,

$$\hat{\tau} = \frac{\int_0^T tx(t)dt + m_\tau\left(\frac{D}{\sigma_\tau}\right)^2}{\int_0^T x(t)dt + \left(\frac{D}{\sigma_\tau}\right)^2} \tag{12}$$

The integral in the denominator is the observed total number of counts $k(0, T)$. The numerator integral is the "mean", or "center of gravity", of the observed detector process $x(t)$. The MAP estimator therefore computes the "mean" or "center of gravity" of the shot noise locations in time and uses it in (12). In the typical situation the initial delay uncertainty is many times the pulse width so that $\sigma_\tau^2 \gg D^2$, and the MAP estimate is precisely this mean location time.

It is interesting to see how the estimator changes form as the optical pulse becomes sharper in form. Consider the pulse in Figure 3b, with its log derivative shown in Figure 3c. Equation (11) becomes instead

$$\frac{\hat{\tau} - m_\tau}{\sigma_\tau^2} = \int_{\hat{\tau}}^{\hat{\tau}+\epsilon} x(t)dt - \int_{\hat{\tau}+D+\epsilon}^{\hat{\tau}+D+2\epsilon} x(t)dt \tag{13}$$

The feedback estimator now corresponds to the short term integration over the front and back end of the expected optical pulse, as the pulse is swept through the observation interval. In essence, the estimate is that value of

τ that "locks up" equal ϵ sec integrations separated by D sec, as shown in Figure 4. Effectively the detector output is being "gated", and the tracking loop that implements (13) is often called an early-late gate loop. Note that as $\epsilon \to 0$ in Figure 3b the pulse rise and fall time decreases, and the estimator integrates over a smaller portion of the observed output. Hence, as the optical pulse used for delay estimation is changed from a smooth Gaussian pulse to a sharper pulse waveform, the optimal estimator form changes from a center-of-gravity estimator to the early-late gate loop.

The dependence on intensity waveform can be further pursued by investigating the Carmer-Rao bound for delay estimation given in the Appendix. For a given density $p(\tau)$, the CRB decreases as the time integral in (A-7) increases. Using (5) this integral can be rewritten as

$$\int_0^T \frac{[dn(t)/dt]^2}{n(t)}\, dt = \int_0^T \left(\frac{dn(t)}{dt}\right)\left(\frac{d \ln n(t)}{dt}\right) dt \qquad (14)$$

where the integral is over all t in (0, T) for which $n(t) \neq 0$. By applying the Schwartz inequality to the right integral, we note that (14) is maximized if

$$\frac{dn(t)}{dt} = \frac{d \log n(t)}{dt}, \quad n(t) \neq 0 \qquad (15)$$

in which case it becomes

$$\int_0^T \frac{dn(t)}{dt}\left(\frac{d \log n(t)}{dt}\right) dt = \int_0^T \left(\frac{dn(t)}{dt}\right)^2 dt \qquad (16)$$

Thus, the integral in (14) is bounded by the energy of the time derivative of the transmitted intensity. By applying Parcival's Theorem, we can further write

$$\int_0^T \left(\frac{dn}{dt}\right)^2 dt = \frac{1}{2\pi} \int_{-\infty}^{\infty} \omega^2 |F_n(\omega)|^2 d\omega \qquad (17)$$

where $F_n(\omega)$ is the Fourier transform of n(t) over one period. The integral on the right can be interpreted as the mean squared frequency of the bandwidth of the intensity. Thus, the CRB for delay estimation is minimized if a transmitter intensity n(t) is used that satisfies (15) and has the largest mean square bandwidth in (17). The equality in (16) occurs only if n(t) = log n(t) + (constant) when $n(t) \neq 0$. This can be satisfied only if n(t) is constant whenever it is non-zero. Thus, (15) and (17) together suggest that best estimation (minimal CRB) corresponds to flat intensities, with as wide a frequency bandwidth as possible. The limit of such waveforms would be an ideal, rectangular, narrow pulse in time, although theoretically (16) is not valid for such intensities (the derivative of a pulse is not squared integrable). This pulsed intensity corresponds to transmission of a narrow burst of light and, in spite of the analytical difficulties, we intuitively expect such optical fields to indeed yield best delay estimation. (We may also note that the CRB for the intensity pulse in Figure 3b is approximately $\epsilon/2\delta \log(\delta/AD)$, which decreases directly with ϵ and D, forcing the intensity to approach the ideal rectangular pulse.) Even though the rectangular intensity is not differentiable, the correlator-integrator in (6) retains its meaning as a short term integration over the pulse width, starting at each value of τ. This is often called a "sliding window" integrator, and the delay point where the window maximizes (6) is the MAP estimate. Unfortunately, this theoretically requires a search over all values of τ in (0, T), although this search time can often be reduced

by carrying out separate acquisition and tracking operations as discussed in the next section.

When background noise is present, the counts are governed by the Laguerre probabilities in (4). The estimation equations (6) and (7) for Poisson counting must then be replaced by the discrete operations:

$$\max_{\tau} \left[\sum_i (\log L_{k_i}) + \log p(\tau) \right] \tag{18}$$

and

$$\frac{p'(\tau)}{p(\tau)} = \sum_i k_i C(k_i, \tau) \left[\frac{d \log m_i(\tau)}{d\tau} \right] \tag{19}$$

where $k_i = k(t_i+\Delta t, t_i)$, $m_i(\tau) = m(t_2+\Delta t, t_i)$, Δt is the counting interval (reciprocal of the detector bandwidth), and

$$C(k_i, \tau) = 1 - \frac{L_{k_i - 1}}{L_{k_i}}$$

with the Laguerre functions having argument $m_i(\tau)/N_0(1+N_0)$. The summations represent modified forms of the correlation operations, and involve the count sequence over Δt sec intervals at the photodetector output.

Acquisition and Tracking in Pulse Delay Estimation

Let us consider the delay estimation problem using ideal rectangular pulses of width D, and let us write the delay τ in the form

$$\tau = jD + \tau_0, \quad k = \text{integer}; \quad 0 \le \tau_0 \le D \tag{20}$$

We are here dividing the delay into an integer multiple of pulse widths plus an additive excess portion τ_0. We can now show that the MAP estimate of τ can be obtained as $\hat{\tau} = \hat{j}D + \hat{\tau}_0$. That is, by simultaneously determining MAP estimates of j and τ_0 and substituting into (20). This follows since the joint MAP estimate of j and τ_0 must satisfy the simultaneous equations:

$$\frac{\partial p(\hat{j}, \hat{\tau}_0/x(t))}{\partial \hat{j}} = 0$$

$$\frac{\partial p(\hat{j}, \hat{\tau}_0/x(t))}{\partial \hat{\tau}_0} = 0 \qquad (21)$$

where $p(\hat{j}, \hat{\tau}_0/x(t)) = p(\tau/x(t))$ with $\tau = \hat{j}D + \hat{\tau}_0$. On the other hand, the MAP estimate of $\tau = jD + \tau_0$ satisfies $\partial(p(\hat{\tau}/k)/\partial\hat{\tau} = 0$. However,

$$\frac{\partial p(\hat{\tau}/k)}{\partial \hat{\tau}} = \frac{\partial p(\hat{\tau}/k)}{\partial \hat{j}} \cdot \frac{d\hat{j}}{d\hat{\tau}} + \frac{\partial p(\hat{\tau}/k)}{\partial \hat{\tau}_0} \cdot \frac{d\hat{\tau}_0}{d\hat{\tau}}$$

$$= \frac{\partial p(\hat{j}D+\hat{\tau}_0/k)}{\partial \hat{j}} \cdot \frac{1}{D} + \frac{\partial p(\hat{j}D+\hat{\tau}_0/k)}{\partial \hat{\tau}_0} = 0 \qquad (22)$$

If $\hat{j}$ and $\hat{\tau}_0$ simultaneously satisfy (21), then (22) is also satisfied with $\hat{\tau} = \hat{j}D + \hat{\tau}_0$. Thus, delay estimates $\hat{\tau}$ can be obtained by estimating individually the number of pulse shifts $\hat{j}$ and the amount of excess, $\hat{\tau}_0$. The estimation of j can be considered an <u>acquisition</u> problem (acquiring which interval the pulse is in), while estimation of τ_0 can be considered a <u>tracking</u> problem (tracking the excess shifts within a pulse interval). In synchronization, the time delay τ generally does not vary more than a pulse width from one observation interval to the next. This suggests an alternative, suboptimal procedure in which we obtain first a pure MAP estimate of j alone in one interval, then using $\hat{j}$ to estimate $\hat{\tau}_0$ in the subsequent interval. The system achieves initial

acquisition first, then carries out tracking over later observation intervals. The system is easier to implement and reduces search time, but we emphasize that it generally does not yield the joint MAP estimates required in (21).

To formulate the initial acquisition problem we model the observable as a vector sequence $\underline{k}$ of counts k_i over disjoint pulse widths D in (0, T). [This is equivalent to considering the h(t) functions in (1) as rectangular of width D and sampling the shot noise x(t) every D sec.] If we assume an initial apriori joint density $p(j, \tau_0)$, then we can determine the MAP estimate of j alone from

$$\max_j p(\underline{k}, j) = \max_j \int_0^D p(\underline{k}/j, \tau_0) p(j, \tau_0) d\tau_0 \tag{23}$$

For quantum limited operation we see that when conditioned on a particular j and τ_0, the received rectangular pulse will influence only the j and j+1 interval counts, all others producing zero counts. Thus,

$$p(\underline{k}/j, \tau_0) = \left[\frac{\left[\mathcal{E}\left(1 - \frac{\tau_0}{D}\right)\right]^{k_j}}{k_j!} e^{-\mathcal{E}\left(1 - \frac{\tau_0}{D}\right)} \right] \left[\frac{(\mathcal{E}\tau_0/D)^{k_{j+1}}}{k_{j+1}!} e^{-(\mathcal{E}\tau_0/D)} \right]$$

$$= \frac{\left[\mathcal{E}\left(1 - \frac{\tau_0}{D}\right)\right]^{k_j} \left[\frac{\mathcal{E}\tau_0}{D}\right]^{k_{j+1}}}{k_j! k_{j+1}!} e^{-\mathcal{E}} \tag{24}$$

where $\mathcal{E}$ is the received pulse energy. The MAP estimate of j is that value at which a maximum occurs in (23). Clearly, if we observe a count sequence of which two are non-zero, (24) is maximum for the non-zero k_i for any τ_0

(i.e., $\hat{j}$ is the index of the first non-zero k_i). If only one count is non-zero it can be labelled either by $k_{\hat{j}}$ or $k_{\hat{j}+1}$, and the MAP estimate is that producing the maximum. Thus, if the qth count is non-zero, we must compare:

$$
\begin{aligned}
p(\underline{k};\hat{j}=q) &= \int_0^D \left(1 - \frac{\tau_0}{D}\right)^{k_q} p(j=q)p(\tau_0/q)d\tau_0 \\
&= p(j=q) \int_0^D \sum_{i=0}^{k_q} \binom{k_q}{i}\left(-\frac{\tau_0}{D}\right)^i p(\tau_0/q)d\tau_0 \\
&= p(j=q)\sum_{i=0}^{k_q} \binom{k_q}{i} \left(\frac{-1}{D}\right)^i m_i(q) \qquad (25)
\end{aligned}
$$

to

$$
\begin{aligned}
p(\underline{k},\hat{j}+1=q) &= p(j=q-1) \int_0^D \left(\frac{\tau_0}{D}\right)^{k_q} p(\tau_0/q-1)d\tau \\
&= p(j=q-1)\left(\frac{1}{D}\right)^{k_q} m_{k_q}(q-1) \qquad (26)
\end{aligned}
$$

where $m_i(q)$ is the ith moment of the conditional density $p(\tau_0/j=q)$. Thus, if only one count is non-zero the above moment sequences of the apriori density $p(\tau_0/j)$ must be computed to determine initial MAP acquisition. If we assume the most practical case where $p(j)$ is uniform over the integers, and $p(\tau_0/j)$ is uniform over $(0, D)$ [initial delay is uniformly distributed over $0, T$] then $m_i(q) = D^{i+1}/i+1$ for all q, and both (25) and (26) have the value $D/k+1$. Thus, in the uniform case, we can equally likely select q as $\hat{j}$ or $\hat{j}+1$. If no counts are non-zero we can only estimate j from its apriori density.

Once $\hat{j}$ has been determined (initial acquisition achieved) in a particular observation interval, it can be used as the true j in subsequent observation intervals in which tracking (estimating τ_0) is accomplished. With $\hat{j}$ given,

the estimate $\hat{\tau}_0$ is that value for which $d \ln p(k/\hat{j}, \hat{\tau}_0)/d\hat{\tau}_0 = 0$, or that satisfying

$$\frac{-k_{\hat{j}}}{1 - \frac{\tau_0}{D}} + k_{\hat{j}+1}\left(\frac{1}{\tau_0/D}\right) = 0 \tag{27}$$

The solution is then

$$\hat{\tau}_0 = \left(\frac{k_{\hat{j}+1}}{k_{\hat{j}+1} + k_{\hat{j}}}\right) D \tag{28}$$

Thus, estimation of delay with rectangular pulses in quantum limited detection can therefore operate by first acquiring $\hat{j}$ during one observation period, then computing (28) in the next. The latter uses the observed count ratio as the fraction of the pulse width for the excess shift. As observations are made over subsequent intervals, (28) can be continually recomputed to keep track of changes in τ_0. We emphasize that we have assumed that j does not change throughout all intervals. If for some reason the delay jumps by several pulse positions, $\hat{j}$ must be re-estimated and the delay reacquired.

The variance of the above estimator is difficult to determine explicitly since $\hat{\tau}_0$ involves a ratio of random counts. In addtion, the CRB is hampered by the non-differentiability of the pulsed intensities. However, a variance upper bound on $\hat{\tau}$ can be determined by noting that Var $\tau_0 \leq D^2$. Furthermore, if all counts are zero the variance is at most that of the apriori density on τ, σ_τ^2, if we use the mean as the delay estimate. Thus,

$$\text{Variance } \tau_0 = \sigma_\tau^2[\text{Prob } \underline{k}=0] + (\text{Var } \tau_0)[\text{Prob } \underline{k}=0]$$

$$\leq \sigma_\tau^2 e^{-\mathcal{E}} + D^2(1-e^{-\mathcal{E}}) \tag{29}$$

This shows the estimator variance is reduced to no more than the square of the pulse width D as pulse energy $\mathcal{E} \to 0$.

When background noise is present, initial acquisition is more complicated since the non-signal intervals produce noise counts also. In this case (24) is replaced by

$$p(\underline{k}/j, \tau_0) = \frac{e^{-(\mathcal{E}/1+N_0)}}{1+N_0} \left(\frac{N_0}{1+N_0}\right)^k L_{k_j}(A) L_{k_{j+1}}(B) \tag{30}$$

where $k = \sum k_i$, $A = \mathcal{E}(1-\tau_0/D)/N_0(1+N_0)$ and $B = \mathcal{E}\tau_0/DN_0(1+N_0)$. For a given count sequence $\underline{k}$ over a particular interval, we must determine j maximizing (23), which is equivalent to determining

$$\max_j p(j) \int_0^D L_{k_j}(A) L_{k_{j+1}}(B) p(\tau_0/j) d\tau_0 \tag{31}$$

Unfortunately, this mazimization must be found after integration over τ_0. However, we note that in comparing two different pair of indices, say (j_1, j_2) and (j_3, j_4), maximization of (30) is equivalent to comparing

$$\frac{p(\underline{k}, j_1)}{p(\underline{k}, j_3)} = \frac{\int_0^D L_{k_{j_1}}(A) L_{k_{j_2}}(B) p(\tau_0/j_1) d\tau_0}{\int_0^D L_{k_{j_3}}(A) L_{k_{j_4}}(B) p(\tau_0/j_3) d\tau_0} \gtrless 1 \tag{32}$$

when each j is equally likely. We now see that for any τ_0 density, if

$j_1 > j_3$ and $j_2 > j_4$, then (32) exceeds one, due to the positiveness and monotonicity of Laguerre functions with their indicies. Thus, if any pair of successive counts are each greater than the corresponding members of any other pair of counts, the optimal estimate of $\hat{j}$ is always the index of the first of the larger. If no one pair dominates any other pair in this way, then one must resort to integrating first in (31). When τ_0 does not depend on j, and is uniformly distributed over D, the integration in (31) can be performed, using the identity:

$$\int_0^y L_m^Q(y-x)L_n(x)dx = L_{m+n+1}^{Q-1}(y) \tag{33}$$

After substituting, and using again the monotonicity of the Laguerre functions, (31) becomes

$$\max_j \left\{ L_{k_j+k_{j+1}}^{Q-1} \left[\frac{\mathcal{S}}{N_0(1+N_0)} \right] \right\} = \max_j \{k_j+k_{j+1}\} \tag{34}$$

Thus, $\hat{j}$ is the index of the pair of consecutive counts having the largest sum, and initial acquisition is achieved by determining the maximal consecutive count pair.

Lastly, we point out that the well accepted procedure of basing initial acquisition on the largest of the counts (selecting $\hat{j}$ as that j for which k_j is maximum) is equivalent to an assumption that $\tau_0 = 0$. For then B = 0 and A does not depend on τ_0 in (31), and maximization over j is equivalent to maximization over k_j.

Delay Tracking in PPM Digital Systems

A problem closely related to pulse delay estimation in synchronization occurs when considering the tracking of pulse shifts in an optical PPM system.

In this operation an optical pulse D sec wide is sent in one of M possible D sec time intervals, and a random time-shift τ_0 is added during transmission, independent of which pulse position is used. This added shift will cause PPM detection errors if not compensated, [5]. A sync subsystem of the receiver attempts to measure the added shift during each word interval for proper receiver compensation. This measurement must be made, however, without regard to the pulse position modulation. Thus during each word interval the transmitted pulse arrives with a total delay $\tau = jD + \tau_0$ as before, where j is the integer position due to the modulation and τ_0 is the added excess delay during transmission. The tracking problem can be formulated as one of estimating τ_0 in the presence of the parameter j. Because of the position modulation, j must be considered independent from one observation interval to the next, and estimates of j in one interval cannot be used in subsequent intervals. Thus, during each observation of $\underline{k}$, τ_0 must be re-estimated in the presence of j. The resulting MAP tracking system for estimating τ_0 depends upon the manner in which the index j is modeled. If j is considered an unknown parameter (no apriori density specified), then the maximization over τ_0 must take into account all the possible values that j can take on. Thus, $\hat{\tau}_0$ is the value for which

$$\max_{\tau_0} p(\tau_0/\underline{k}) = \max_{j} \left[\max_{\tau_0} p(\tau_0/\underline{k}, j) \right]$$

$$= \max_{j, \tau_0} \left[p(\tau_0/\underline{k}, j) \right] \qquad (35)$$

This is equivalent to determining simultaneous maximizing values of τ_0 and j, and therefore correspond to simultaneous estimates of these parameters. In other words, the MAP trackers must estimate both parameters each though only the estimate of τ_0 is of interest. Furthermore, both estimates must be obtained during each observation, and cannot be subdivided into acquisition and tracking, if real time solutions are desired.

If a delay of one word interval is acceptable, a suboptimal tracking procedure would be one that first estimates j during the original observation; stores the observation (detector output) for one word length, then reuses the stored observables, along with the estimate $\hat{j}$, to determine τ_0, as shown in Figure 5. The estimate of j can be made using the techniques similar to initial acquisition in synchronization. The tracking system is therefore attempting to first detect which interval contains the pulse (i.e., decode the PPM word) then uses the decoded word to estimate τ_0. In the literature, this is referred to as decision-directed estimation [2] and the resulting sync systems are called data-aided trackers [6, 7].

If the word delay in data-aided systems in prohibited an alternative scheme is that shown in Figure 6. Here estimates of $\hat{\tau}_0$ are made consecutively with each successive pair of observed counts, and stored until the end of the observation interval. The estimate of j is then used to select the τ_0 corresponding to the most likely τ_0. This operation avoids the word interval delay, but requires a bank of estimators. Both these systems are of course suboptimal since they do not necessarily produce the simultaneous maximization required in (35).

If, instead of treating $\hat{j}$ as a unknown parameter, we model it as a random variable taking on the values $1, 2, 3, \ldots, M$ with equal probability, the MAP estimate of τ_0 can be obtained by averaging over these j values. Hence we write

$$\max_{\tau_0} p(\tau_0/\underline{k}) = \max_{\tau_0} \left[\sum_{j=1}^{M} p(\tau_0/\underline{k}, j) \right] \tag{36}$$

Since each term $p(\tau_0/\underline{k}, j)$ is the conditional density of τ_0 when the pulse is transmitted in the jth position, only the k_j and k_{j+1} counts are necessary to estimate τ_0. (All other counts are either zero in the quantum limited case, or contain only noise counts, when background is present.) Hence, $p(\tau_0/\underline{k}, j)$ can theoretically be computed immediately after k_j and k_{j+1} are observed. The summation in (36) is therefore a superposition of all such aposteriori densities, each delayed until the end of the observation interval. The estimate $\hat{\tau}_0$ is then made from this superposition. The system is shown in Figure 7. Note that the delaying of the aposteriori densities can be considered as modulation removal-eliminating the position shift due to PMM- and shifting the excess delay τ_0 to the end of the interval, where the estimate is made. Note that this latter estimate is <u>not</u> simply the average of the individual MAP estimates at each value of j. If it is known that τ_0 is confined to a narrow region about each pulse position, then (36) is approximately

$$\max_{\tau_0} \{p(\tau_0/\underline{k})\} \approx \max_{\tau_0} \{p(\tau_0/\underline{k}, j_{max})\} \tag{37}$$

where j_{max} is the j maximizing $p(\tau_0/j,\underline{k})$ over all τ_0. The last term is identical to the simultaneous estimate of j and τ_0, and therefore corresponds to the optimal MAP tracker defined in (35).

REFERENCES

[1] Van Trees, H., Detection, Estimation, and Modulation Theory-Part 1 (book), Wiley, Inc., 1968.

[2] Hancock, J. and Wintz, P., Signal Detection Theory (book), McGraw-Hill Book Company, 1966, Chapter 5.

[3] Viterbi, A., Principles of Coherent Communication, (book), McGraw-Hill Book Co., 1966, Chapter 5.

[4] Gagliardi, R. and Mohanty, N., "Estimation Theory and Optical Communications," USCEE Report 446, April, 1973.

[5] Gagliardi, R., "The Effect of Timing Errors in Optical Digital Systems," IEEE Trans. on Comm. Tech., Vol.-COM-20, April, 1972.

[6] Lindsey, W. and Simon, M., "Data-Aided Carrier Tracking Loops," IEEE Trans. on Comm. Tech., Vol. COM-19, pp. 157, April, 1971.

[7] Gagliardi, R., "Synchronization Using Pulsed Edge Tracking in Optical Systems," USCEE Report 426, September, 1972.

APPENDIX

Let $\underline{k}$ be an observable vector containing a real random parameter θ, and let $p(\theta)$ be an apriori probability density on θ. The MAP estimate of θ, given an observable $\underline{k}$, is that $\hat{\theta}$ maximizing

$$\log p(\theta, \underline{k}) = \log p(k/\theta) + \log p(\theta) \tag{A-1}$$

where $p(\underline{k}/\theta)$ is the conditional density of $\underline{k}$ given the parameter θ. In optical systems, $\underline{k}$ represents the sequence of observed photoelectron counts $(k_1, k_2, \ldots)$, each observed over a Δt sec counting interval. ($\Delta t \cong$ 1/detector bandwidth). Under quantum limited operation, the conditional density is

$$p(\underline{k}/\theta) = \prod_i [\, s_i(\theta)]^{k_i} \exp[-s_i(\theta)]/k_i! \tag{A-2}$$

where $s_i(\theta)$ is the count parameter over interval $(t_i, t_i+\Delta t)$:

$$s_i(\theta) = \int_{t_i}^{t_i+\Delta t} n(t, \theta)dt \tag{A-3}$$

and $n(t, \theta)$ is the count intensity. The MAP estimate of θ in (A-1) is that achieving

$$\max_{\theta} \left\{ \sum [k_i \log s_i(\theta) + s_i(\theta)] + \log p(\theta) \right\} \tag{A-4a}$$

The solution $\hat{\theta}$ must also satisfy the extremal condition:

$$\sum_i \left[k_i \frac{s_i'(\theta)}{s_i(\theta)} - s_i'(\theta) \right] + \frac{p'(\theta)}{p(\theta)} \Bigg|_{\theta=\hat{\theta}} = 0 \tag{A-4b}$$

where the primes denote derivatives with respect to θ. As $\Delta t \to 0$, the continuous versions of these equations can be obtained, since $\mathcal{S}_i(\theta) \to n(t, \theta)dt$ and $k_i \to x(t)$, the detector shot noise process. Hence (A-4) becomes

$$\max_{\theta} \left[\int_0^T x(t) \log n(t, \theta) dt + \log p(\theta) - \int_0^T n(t, \theta) dt \right. \qquad \text{(A-5a)}$$

and

$$\int_0^T x(t) \left[\frac{n'(t, \hat{\theta})}{n(t, \hat{\theta})} \right] dt + \frac{p'(\hat{\theta})}{p(\hat{\theta})} - \int_0^T n'(t, \theta) dt = 0 \qquad \text{(A-5b)}$$

The Cramer-Rao Bound lower bounds the MAP estimate, and is given by

$$\text{CRB} = \left\{ -E_{k, \theta} \left[\frac{\partial^2 \log[p(k/\theta) p(\theta)]}{\partial^2 \theta} \right] \right\}^{-1} \qquad \text{(A-6)}$$

where E is the expectation operator of $\underline{k}$ and θ. Using (A-2) in (A-6) and averaging, yields

$$\text{CRB} = \left\{ E_{\theta} \left[\frac{\partial^2 \log p(\theta)}{\partial^2 \theta} + \int_0^T \frac{[n'(t, \theta)]^2}{n(t, \theta)} dt \right] \right\}^{-1} \qquad \text{(A-7)}$$

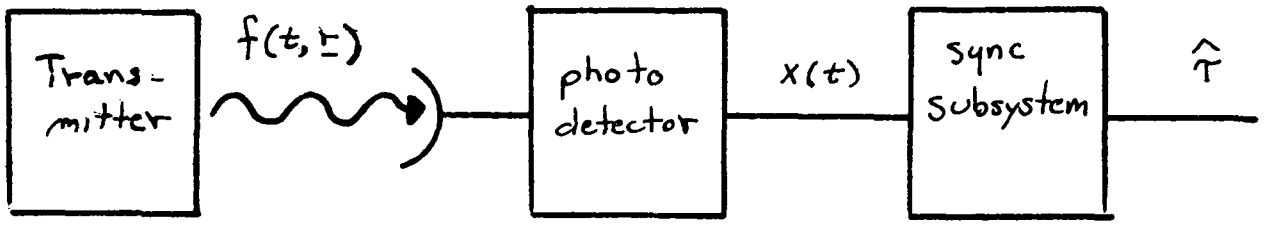

Figure 1

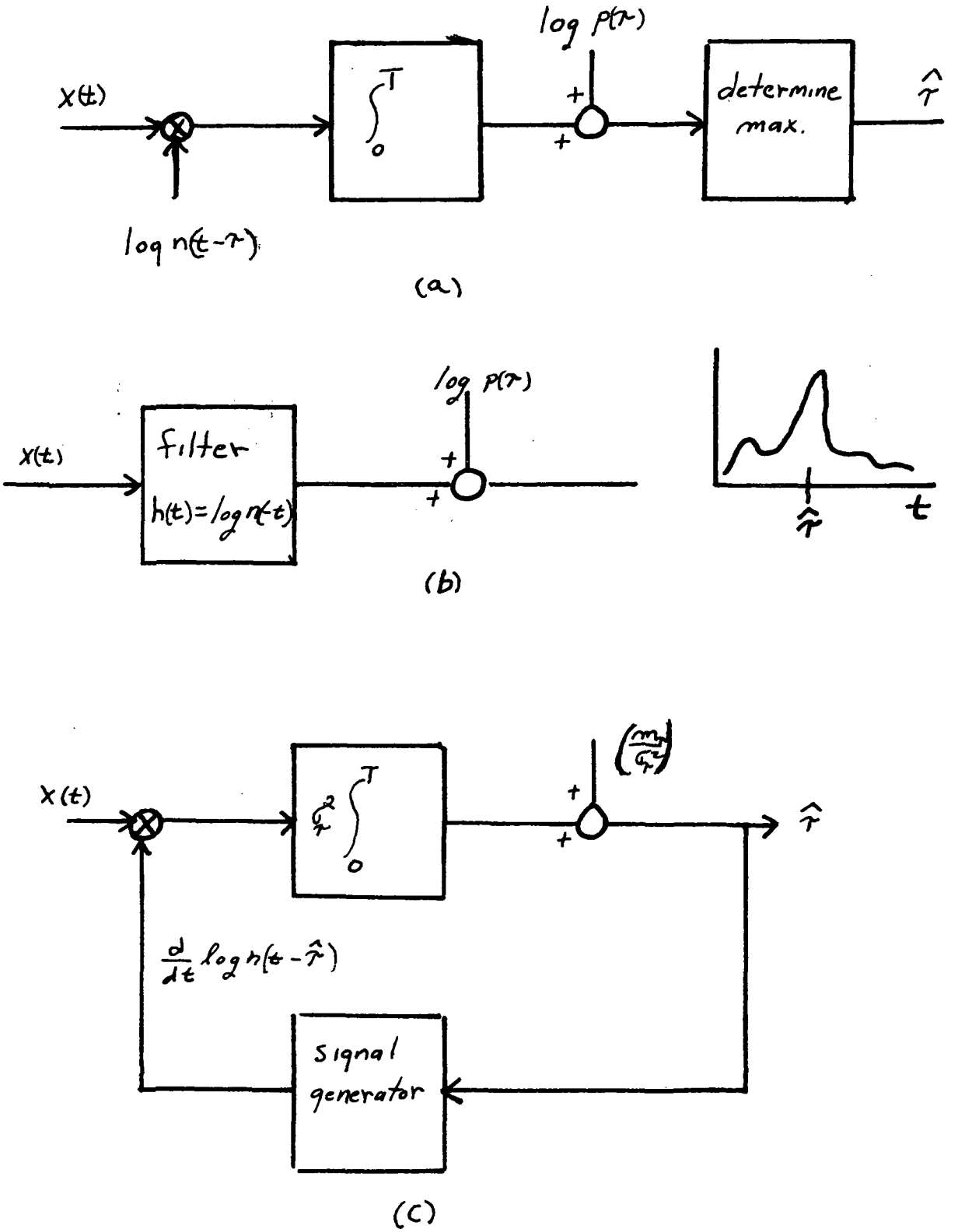
x(t)
log n(t-τ)
T
0
log p(τ)
+
+
determine max.
τ̂
(a)
x(t)
filter
h(t)=log n(-t)
log p(τ)
+
+
τ̂
t
(b)
x(t)
T
0
(m_τ/σ_τ²)
+
+
τ̂
d/dt log n(t-τ̂)
signal generator
(c)

Figure 2

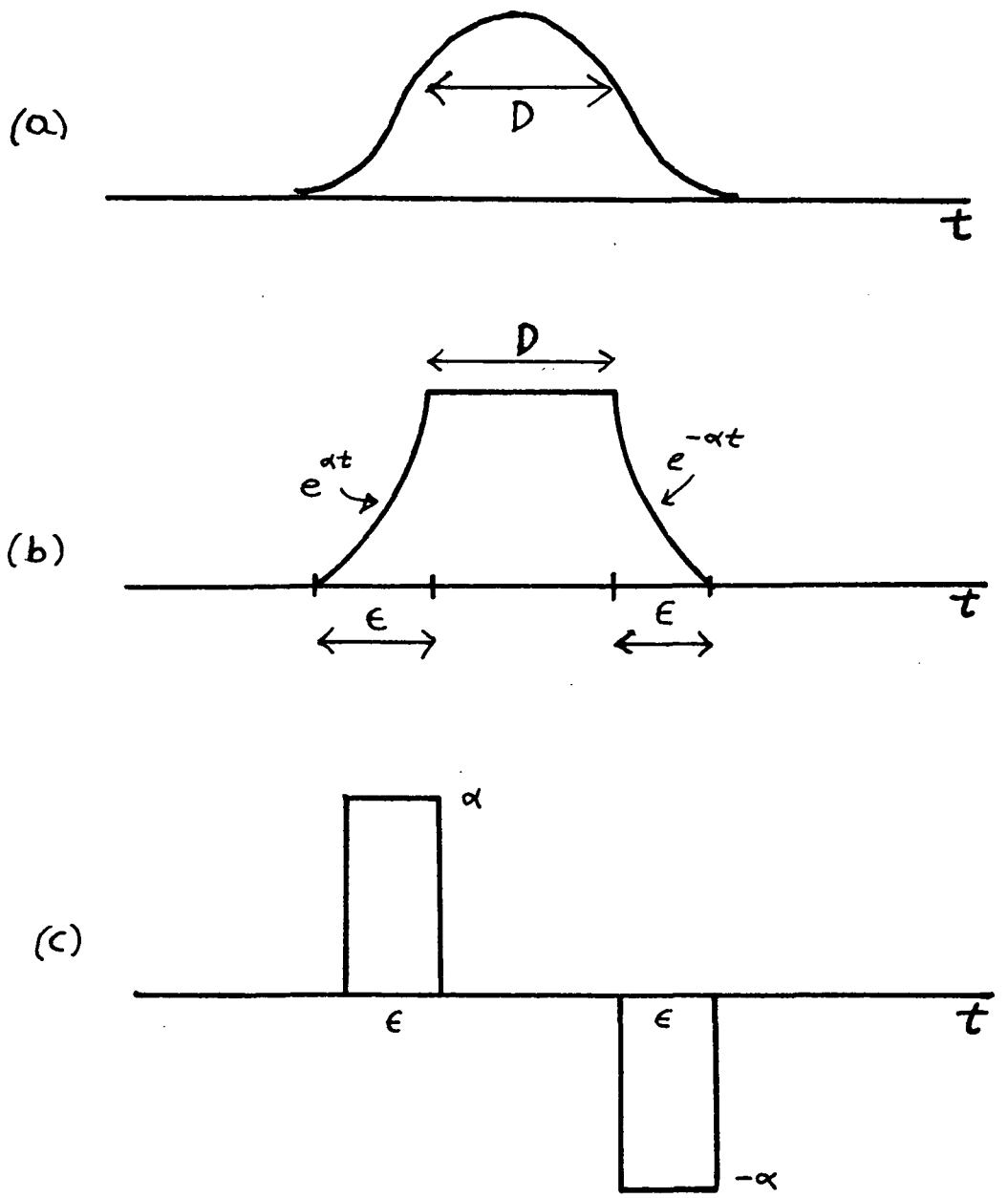
(a)
D
t
(b)
D
$e^{\alpha t}$
$e^{-\alpha t}$
ϵ
ϵ
t
(c)
α
ϵ
ϵ
t
$-\alpha$

Figure 3

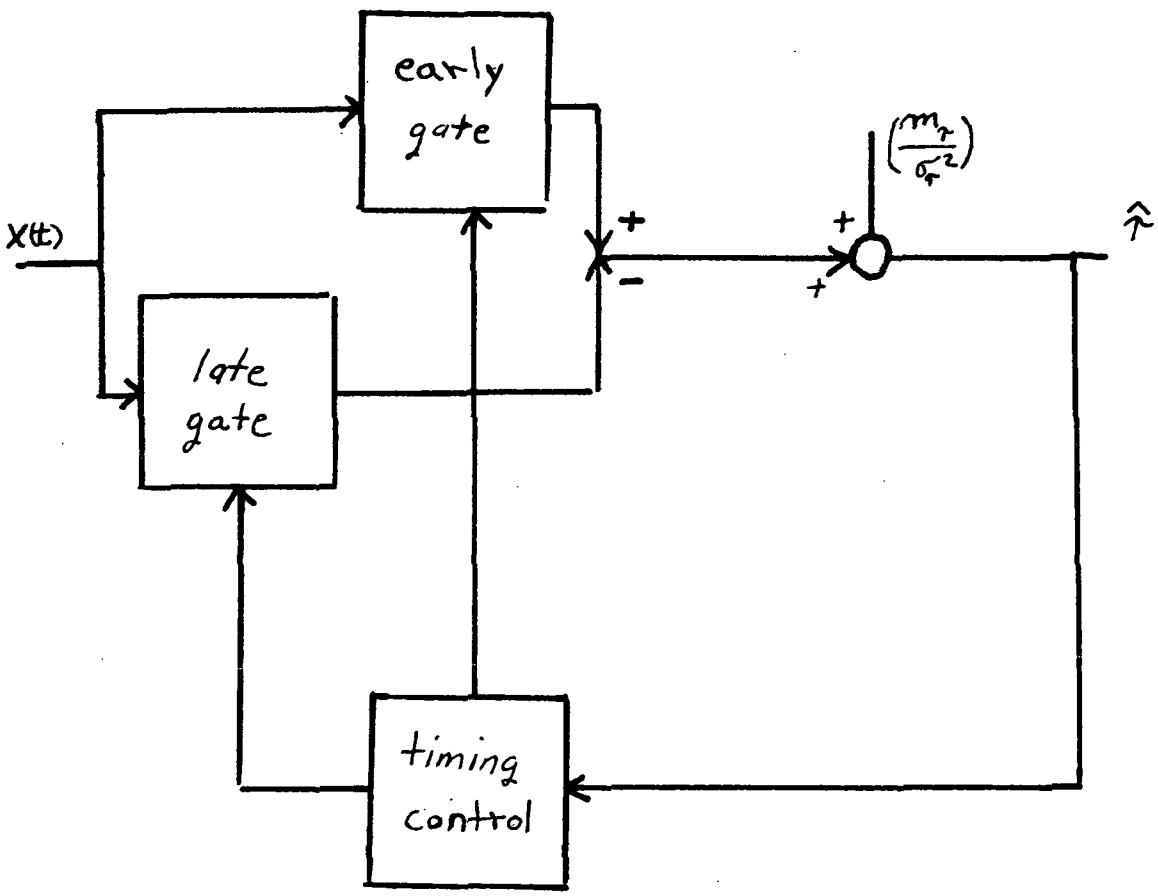
early gate
late gate
timing control
X(t)
+
−
+
+
$\left(\frac{m_\tau}{\sigma_\tau^2}\right)$
$\hat{\tau}$

Figure 4

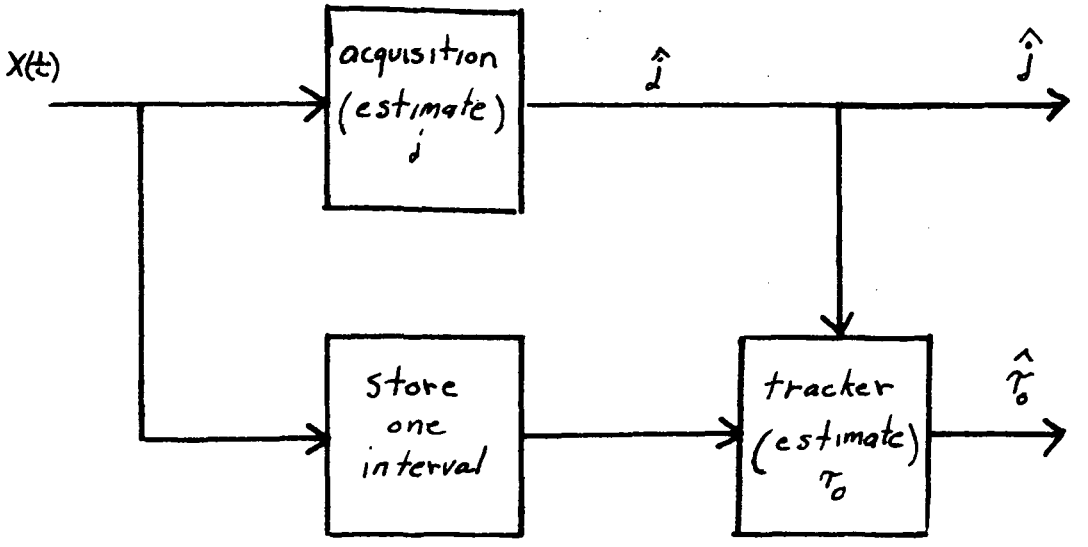
X(t)
acquisition
(estimate)
j
$\hat{j}$
$\hat{j}$
store
one
interval
tracker
(estimate)
τ_0
$\hat{\tau}_0$

Figure 5.

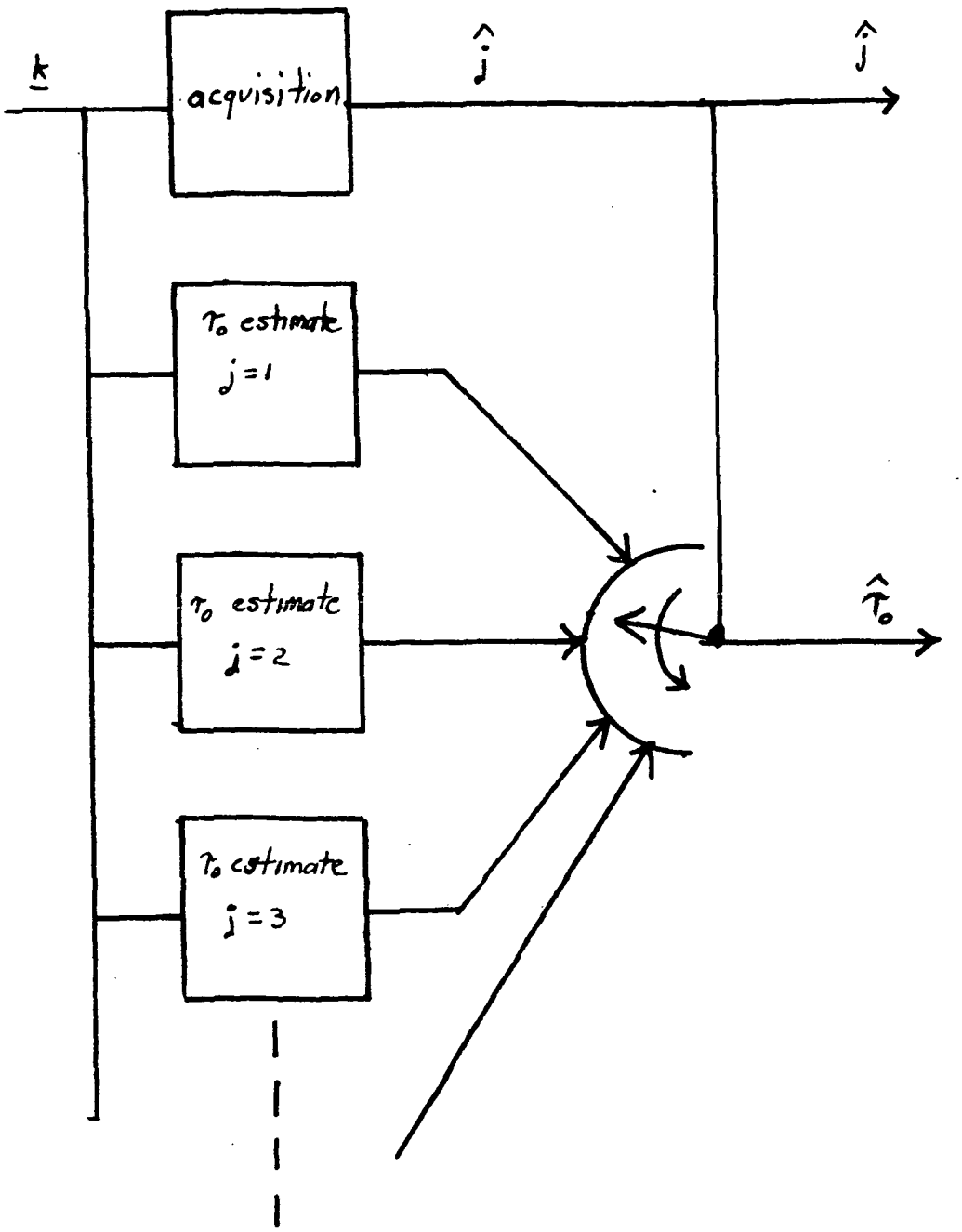
k
acquisition
$\hat{j}$
$\hat{j}$
τ_0 estimate
$j=1$
τ_0 estimate
$j=2$
τ_0 estimate
$j=3$
$\hat{\tau}_0$

Figure 6

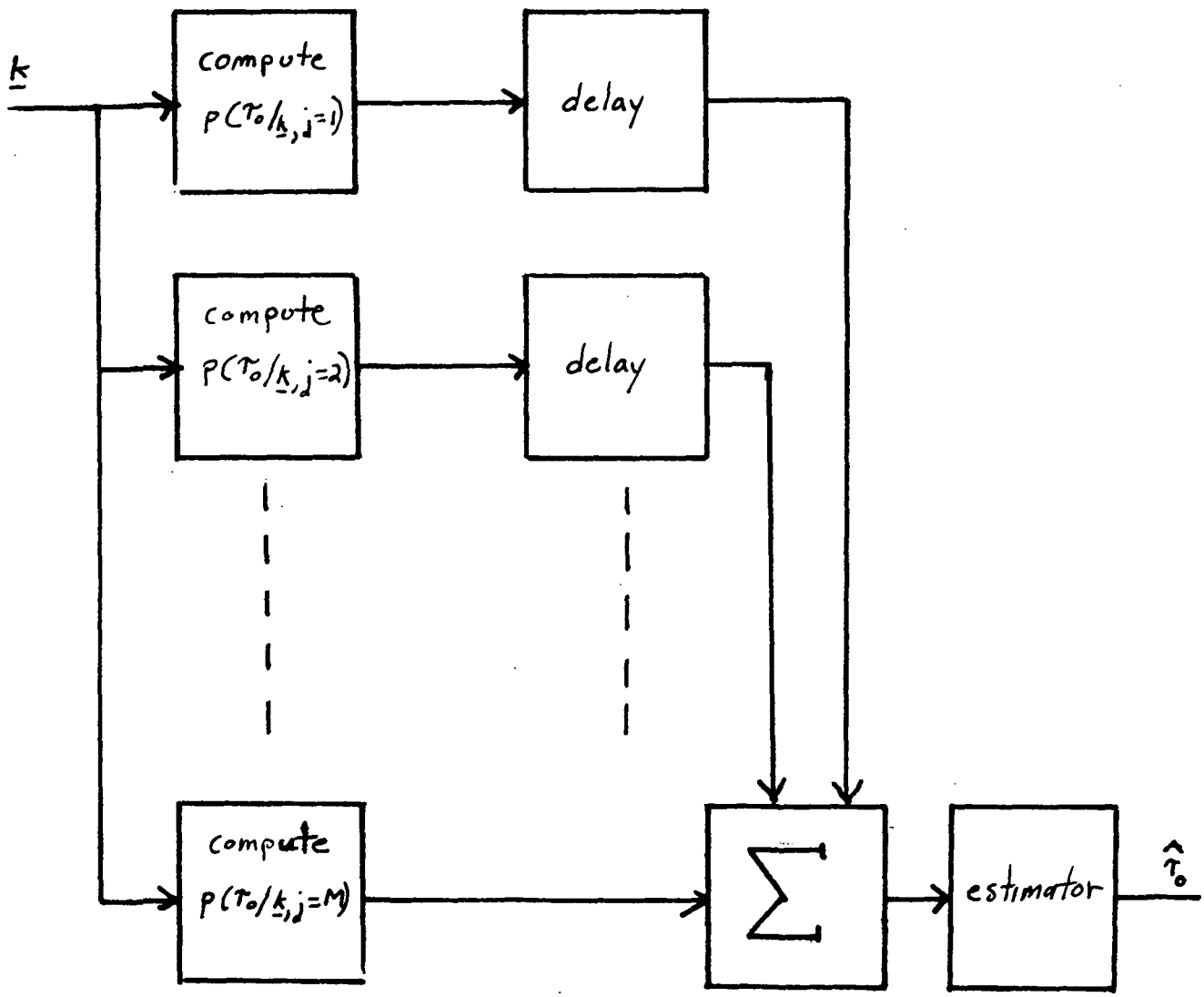
k
compute
p(τ0/k, j=1)
delay
compute
p(τ0/k, j=2)
delay
compute
p(τ0/k, j=M)
Σ
estimator
τ̂0

Figure 7

USG Engineering