N74 10043

NASA TECHNICAL MEMORANDUM

NASA TM X-71456

NASA TM X-71456

CASE FILE COPY

CASE FILE COPY

# REFAN PROGRAM
# PHASE I - SUMMARY REPORT

by Eldon W. Sams and Donald L. Bresnahan
Lewis Research Center
Cleveland, Ohio 44135
October, 1973

This information is being published in preliminary form in order to expedite its early release.

| 1. Report No. | 2. Government Accession No. | 3. Recipient's Catalog No. |
|---|---|---|
| NASA TM X-71456 | | |

| 4. Title and Subtitle | 5. Report Date |
|---|---|
| REFAN PROGRAM<br>PHASE I - SUMMARY REPORT | September 1973 |
| | 6. Performing Organization Code |
| 7. Author(s)<br>Eldon W. Sams and Donald L. Bresnahan<br>Refan Project Office | 8. Performing Organization Report No.<br>E-7749 |
| 9. Performing Organization Name and Address<br>Lewis Research Center<br>National Aeronautics and Space Administration<br>Cleveland, Ohio 44135 | 10. Work Unit No.<br>739-70 |
| | 11. Contract or Grant No. |
| 12. Sponsoring Agency Name and Address<br>National Aeronautics and Space Administration<br>Washington, D. C. 20546 | 13. Type of Report and Period Covered<br>Technical Memorandum |
| | 14. Sponsoring Agency Code |

15. Supplementary Notes

16. Abstract


The Refan Program is aimed at a large reduction in aircraft approach and takeoff noise in the vicinity of airports caused by the JT3D-powered 707's and DC-8's and the JT8D-powered 727's, 737's and DC-9's. These aircraft represent a major part of the existing commercial fleet.

The noise reductions can be achieved by engine and nacelle modifications in the form of aircraft retrofit kits. Engine turbomachinery noise is reduced by replacing the current two-stage fan with a larger single-stage fan and by nacelle acoustic treatment. Jet noise is reduced by the reduction in jet velocity caused by additional turbine work extraction to drive the larger bypass fan. The predicted net effect of these modifications on installed performance is large noise reductions on both approach and takeoff, increased takeoff thrust, decreased takeoff field length, and maintained or improved aircraft range depending on the amount of acoustic treatment included.

The Refan Program is being conducted in two phases under contracts with one engine and two airframe companies. Results of the Phase I work are summarized in this report which describes the refan nacelle configurations studied, the airplane modifications required to install the nacelles, and the resulting airplane performance and noise reductions predicted for all five aircraft.


| 17. Key Words (Suggested by Author(s)) | 18. Distribution Statement |
|---|---|
| Refan program; Refan engine/nacelle;<br>Acoustically-treated engine/nacelle;<br>Aircraft noise reduction. | |

| 19. Security Classif. (of this report) | 20. Security Classif. (of this page) | 21. No. of Pages | 22. Price* |
|---|---|---|---|
| Unclassified | Unclassified | 69 | |

* For sale by the National Technical Information Service, Springfield, Virginia 22151

NASA-C-168 (Rev. 6-71)

CONTENTS

SUMMARY . . . . . 1

INTRODUCTION . . . . . 3

REFAN PROGRAM . . . . . 5

ENGINES . . . . . 7

JT3D Refan Engine . . . . . 7
JT8D Refan Engine . . . . . 10

JT3D-POWERED AIRCRAFT . . . . . 13

707-320B Airplane . . . . . 13
Refan Nacelle Configurations . . . . . 13
Airplane Modifications . . . . . 13
Airplane Performance . . . . . 14
Noise Reduction . . . . . 15
Nacelle Selection . . . . . 15

DC-8-61 Airplane . . . . . 19
Refan Nacelle Configurations . . . . . 19
Airplane Modifications . . . . . 19
Airplane Performance . . . . . 20
Noise Reduction . . . . . 20
Nacelle Selection . . . . . 20

DC-8-63 Airplane . . . . . 24
Refan Nacelle Configurations . . . . . 24
Airplane Modifications . . . . . 24
Airplane Performance . . . . . 24
Noise Reduction . . . . . 25
Nacelle Selection . . . . . 25

Noise Comparisons for JT3D-Powered Aircraft . . . . . 29
FAR-36 Levels . . . . . 29
Footprints . . . . . 29

JT8D-POWERED AIRCRAFT . . . . . 36

727 Airplane . . . . . 36
Refan Nacelle Configurations . . . . . 36
Airplane Modifications . . . . . 36
Airplane Performance . . . . . 37
Noise Reduction . . . . . 37
Nacelle Selection . . . . . 37

737 Airplane . . . . . 41
Refan Nacelle Configurations . . . . . 41
Airplane Modifications . . . . . 41
Airplane Performance . . . . . 42
Noise Reduction . . . . . 42
Nacelle Selection . . . . . 42

DC-9 Airplane . . . . . 46
Refan Nacelle Configurations . . . . . 46
Airplane Modifications . . . . . 46
Airplane Performance . . . . . 47
Noise Reduction . . . . . 47
Final-Phase I Refan Nacelle Configurations . . . . . 47
Airplane Modifications . . . . . 48
Airplane Performance . . . . . 48
Noise Reduction . . . . . 48
Nacelle Selection . . . . . 49

Noise Comparisons for JT8D-Powered Aircraft . . . . . 55
FAR-36 Levels . . . . . 55
Footprints . . . . . 55
Noise Level Uncertainties . . . . . 55

PROGRAM STATUS . . . . . 64
JT3D Program . . . . . 64
JT8D Program . . . . . 64

REFERENCES . . . . . 66

E-7749

# REFAN PROGRAM

## PHASE I - SUMMARY REPORT

by: Eldon W. Sams and Donald L. Bresnahan
Refan Project Office

Lewis Research Center

## SUMMARY

The Refan Program is aimed at a large reduction in aircraft approach and takeoff noise in the vicinity of airports caused by the JT3D-powered 707's and DC-8's and the JT8D-powered 727's, 737's, and DC-9's. These aircraft represent a major part of the existing commercial fleet.

The noise reductions are planned to be achieved by engine and nacelle modifications in the form of aircraft retrofit kits which will provide the desired noise reductions, while retaining or improving airplane reliability, maintainability and performance, all at an acceptable fleet retrofit cost.

The modifications are designed to reduce turbomachinery noise caused by engine airflow interaction with rotating and stationary blade rows particularly in the bypass fan, and exhaust jet noise generated aft of the nozzle where the high-velocity jet interacts with the surrounding atmosphere. Turbomachinery noise is reduced by replacing the current two-stage fan with a larger single-stage fan with greater spacing between rotating and fixed blade rows, proper selection of numbers of blades, and nacelle acoustic treatment to further reduce fan noise. Jet noise is reduced by the decrease in jet velocity due to additional turbine work extraction to drive the larger bypass fan.

These modifications will result in improvements in bare engine takeoff thrust and cruise thrust specific fuel consumption which are partially offset by the increase in engine diameter, length and weight of the new acoustically-treated refan nacelles and airplane modifications required to install the nacelles. The above tradeoffs (including installation losses) are predicted to result in increased takeoff thrust, reduced takeoff field length, large noise reductions on both approach and takeoff, and maintained or improved aircraft range depending on the amount of acoustic treatment incorporated. Various refan nacelle treatment configurations are analyzed for each of the five aircraft.

The Refan Program is being conducted in two phases under contracts with one engine and two airframe companies who serve as associate contractors under direction of the Refan Project Office at NASA-Lewis Research Center. Phase I includes engine/nacelle-and-airplane-integration definition studies, preliminary design studies, component or model tests for design confirmation, and retrofit-economic studies. The detailed results are presented in the contractors Phase I reports for the five airplane/engine combinations.

During Phase I, total program funding curtailment forced cutback in the program scope to one engine. Preliminary engine design work and nacelle/airplane definition and integration studies on the JT3D-powered aircraft had been completed and showed the refanned JT3D to be a low-risk development with no significant technical problems in refan retrofit of the 707 and DC-8 aircraft. However, the joint NASA/DOT/FAA program management decision was to proceed with the JT8D (727, 737 and DC-9 aircraft) and terminate the JT3D (707 and DC-8 aircraft) effort. The basic reason for this decision was that the JT8D-powered aircraft would have the larger impact on airport noise exposure in the 1980's.

Phase II, just beginning, will include final design of the refan engine/nacelles, hardware fabrication, component and model testing, ground testing of a 727 flightworthy refan nacelle, and flight demonstration testing of a refanned DC-9 airplane.

Results of the contractors Phase I efforts/reports are summarized in this Phase I Summary Report with regard to the JT3D/JT8D refan engine definitions, the refan nacelle configurations studied, the airplane modifications to install the nacelles, the resulting airplane performance, the noise reductions predicted, and comments on nacelle selection for Phase II work.

# INTRODUCTION

One of the major problems confronting civil aviation today is public exposure to noise generated by aircraft in the vicinity of airports. The noisiest aircraft in the current commercial fleet are the standard-bodied aircraft introduced into service in the late 1950's and early 1960's. These aircraft consist of the 707's and DC-8's powered by JT3D turbofan engines and the 727's, 737's and DC-9's powered by JT8D turbofans. These aircraft comprise a large part of the existing and projected fleet, so a significant reduction in their noise levels would result in a major reduction in airport noise exposure.

Two source noise reduction schemes applicable to existing standard-bodied aircraft are being studied. One scheme employs acoustic nacelle treatment only and gives considerable noise reduction which principally affects landing approach noise. Considerable effort has been applied to this scheme including early NASA work on acoustic nacelles for the 707 and DC-8 aircraft reported in reference 1, as well as a current FAA program which includes all JT3D-powered aircraft and the JT8D-powered 727 and DC-9 aircraft.

The other scheme, which is currently under study to determine its technical feasibility and economic viability, employs acoustic nacelle treatment in conjunction with engine modifications, mainly involving a larger single-stage fan and engine bypass ratio, and is generally referred to as refan. This scheme provides greater noise reduction potential than nacelle treatment only, giving considerable reductions in both landing approach and takeoff noise as well as significant improvements in installed takeoff thrust and cruise thrust specific fuel consumption.

The refan program is aimed at developing the engine and nacelle modifications in the form of engine and airplane retrofit kits for standard-bodied aircraft. The objectives are to demonstrate the noise reduction capability of these modifications while retaining or improving engine reliability and maintainability, with no reduction in aircraft performance, and all at an acceptable fleet retrofit cost.

The refan program is focused on significantly reducing the two main sources of engine noise. These sources are turbomachinery noise generated by engine airflow interacting with rotating and stationary blade rows, principally in the fan stage; and jet noise generated aft of the nozzle where the high-velocity exhaust jet mixes with the surrounding atmosphere.

Fan turbomachinery noise is reduced by use of a larger-diameter single-stage fan with greater spacing between rotating and stationary stages than in the current two-stage fan, by proper selection of numbers of rotor blades and stator vanes for minimum noise propagation, and by nacelle acoustic treatment to further reduce the remaining turbomachinery noise.

Jet noise is reduced by decreasing the jet exhaust velocity through additional turbine work extraction to drive the larger-diameter single-stage fan. The larger fan increases engine bypass ratio and increases engine thrust while reducing exhaust jet velocity and noise.

This report describes the Refan Program, the refan engines, and the five refanned JT3D/JT8D-powered aircraft with regard to refan nacelle configurations, airplane modifications required to install the nacelles, and resulting airplane performance and noise reduction predictions. Except where noted, the information reported herein was compiled from contractor reports referenced at the end of the report (references 2 thru 15).

## REFAN PROGRAM

The Refan Program was initiated in August 1972. The original program was a 3-year, $55 million program encompassing noise and smoke reduction for the JT3D and JT8D engines. Phase I contracts were let for engine and nacelle definition, preliminary design, and retrofit economics and program studies with three major contractors: Pratt & Whitney Aircraft as the engine contractor, and The Boeing Company and Douglas Aircraft Company as the airplane contractors. Working under separate contracts, the three serve as associate contractors under technical direction from the Refan Project Office at NASA-Lewis Research Center. Small contracts were also let with United and American Airlines for consulting work to provide airlines supporting information and to help assure that the modifications being considered incorporate as many of the user airlines' requirements as possible.

Phase I work was initiated as an 8-month technical effort on both the JT3D and JT8D engines to be completed in April 1973. In January 1973, total program funding curtailment to $40 million forced cutback in the program scope to one engine. The joint NASA/DOT/FAA program management decision was to proceed with the JT8D (727, 737 and DC-9 aircraft) and terminate the JT3D (707 and DC-8 aircraft) effort. The basic reason for this decision was that the JT8D-powered aircraft would have the larger impact on airport noise exposure in the 1980's.

At the time of cancellation of the JT3D portion of the Refan Program, there were no major technical problems encountered with refanning of the JT3D. The refanned JT3D was basically a low risk development. The preliminary engine design work and the preliminary nacelle/airplane definition and integration studies on the 707 and DC-8 had been completed and revealed no significant technical problems in refan retrofit of these aircraft.

The refan program is divided into two phases. For the engine contractor, Phase I consists of engine definition, preliminary engine design, component tests for design confirmation, and program definition. Phase II will consist of engine design, fabrication, and testing which includes both full scale engine and component tests.

For the airplane contractors, Phase I includes nacelle and airplane integration definition studies, retrofit and economic studies, model aerodynamic tests, preliminary design and analysis, and program definition. Program adjustments carried Phase I through June 1973 in order to better define the aircraft modifications and nacelle selection before Phase II was initiated. Phase II will include nacelle and airplane modification design, fabrication of test hardware, model and component tests, nacelle ground tests, and flight demonstration tests where funding permits.

This report summarizes the results of Phase I work by the engine and airplane contractors on the JT3D/JT8D Refan Program. For the JT3D, it describes the baseline turbofan engine and the refan engine modifications and characteristics. It also describes for the 707 and DC-8 baseline airplanes, the refan nacelle configurations for three acoustic suppression levels, the airplane modifications to install and integrate these nacelles on the airplanes, and the predicted airplane performance and noise reductions.

Similarly for the JT8D, this report describes the baseline turbofan engine, the refan engine modifications and characteristics, the refan nacelle treatment configurations, the airplane modifications, and the resulting predicted airplane and noise reduction performance for the refan nacelles on the 727, 737 and DC-9 airplanes.

## ENGINES

### JT3D Refan Engine

The JT3D-3B engine, selected as the baseline engine for the JT3D portion of the Refan Program because of its predominance in the 707 and DC-8 aircraft, is shown in the upper half of Figure 1. It is a two-spool turbofan engine with a can-annular combustor. The low pressure spool consists of a 2-stage fan and 6-stage low pressure compressor driven by a 3-stage low pressure turbine. The high pressure spool consists of a 7-stage high pressure compressor driven by a 1-stage high pressure turbine.

The refan version of the JT3D-3B, designated the JT3D-9, is shown in the lower half of Figure 1. The refan design provides a larger-diameter single-stage fan and an additional supercharger stage in place of the current two-stage fan. The fan modification includes elimination of the inlet guide vanes, increased spacing between fan and stator blading, and optimum numbers of fan and stator blades, all designed to reduce fan noise.

The increased turbine work to drive the larger fan requires replacement of the fourth stage turbine blades and disk, and a new turbine shaft. The increased turbine work produces a large reduction in primary jet velocity which is the key to effective reduction of externally-generated jet noise.

As noted in Table 1, the larger fan of the JT3D-9 increases the bypass ratio, engine airflow and engine thrust, while reducing jet velocity from that of the current JT3D-3B. The small increase in turbine inlet temperature and fan tip speed are considered of no significant consequence to engine design or operation. The increased engine length, diameter and weight, plus the desire to acoustically treat the nacelle for further fan noise reduction, necessitate a new refan nacelle and its installation and integration with the airplane.

The refan benefits on uninstalled engine performance (lower part of Table 1) include an increase in thrust at takeoff and maximum cruise, and a decrease in TSFC at cruise conditions. These benefits will be traded off against the penalties associated with larger engine diameter and weight in the airplane performance studies discussed later.

A more complete description of the refanned engine and its comparison with the baseline engine can be found in references 2 and 3.

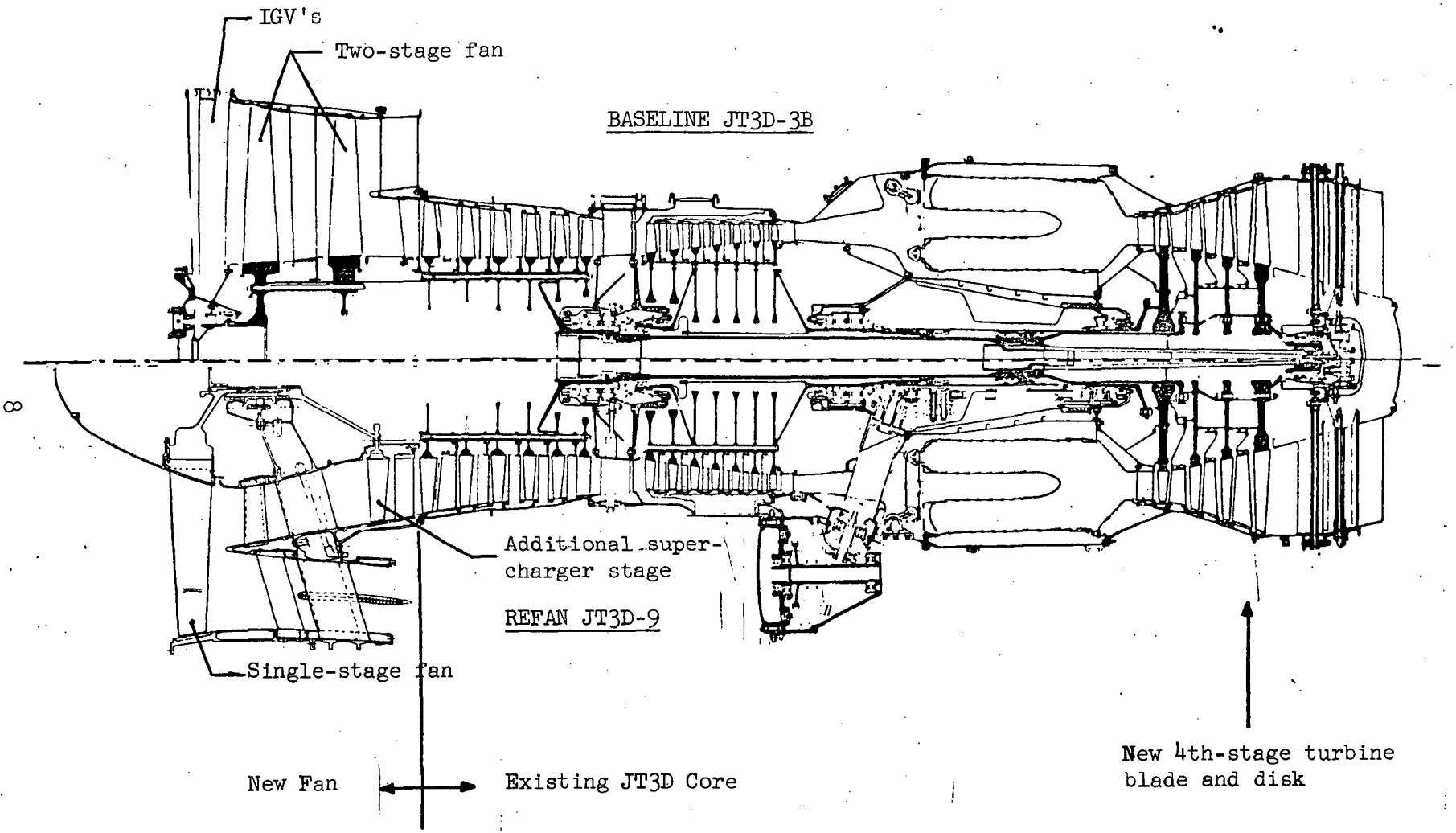


FIGURE 1. - COMPARISON OF BASELINE JT3D-3B and REFAN JT3D-9 ENGINE

TABLE 1 - COMPARISON OF BASELINE JT3D-3B AND REFAN JT3D-9 CHARACTERISTICS

| Parameter | Existing JT3D-3B | Refan JT3D-9 |
|---|---|---|
| Fan | 2-stage | 1-stage |
| Inlet Guide Vanes | yes | no |
| Fan Diameter, in. | 50.2 | 56.2 |
| Inlet Diameter, in. | 51.3 | 56.8 |
| Length, in. | 134.4 | 146.5 |
| Engine Weight (dry), lbs. | 4,300 | 4,700 |
| Total Airflow, SLTO, lbs/sec | 460 | 611 |
| Fan Pressure Ratio | 1.72 | 1.66 |
| Fan Tip Speed @ TO, ft/sec | 1,423 | 1,540 |
| Bypass Ratio | 1.36 | 2.31 |
| Cycle Temperature, °F | 1,731 | 1,774 |
| Primary Jet Velocity, ft/sec | 1,580 | 1,361 |
| **Uninstalled Characteristics** | | |
| Thrust, SLS | 18,000 | 20,750 |
| Thrust, T.O. (M=0.22) | 15,300 | 17,075 |
| Thrust, Max. Cruise (Alt=35,000 M=0.8) | 4,400 | 4,720 |
| TSFC, Max. Cruise (Alt=35,000 M=0.8) | 0.795 | 0.765 |

JT8D Refan Engine

The JT8D-9 engine selected as the baseline engine for refan studies and shown in the upper half of Figure 2, is a two-spool turbofan engine. The low pressure spool consists of a 2-stage fan and 4-stage low pressure compressor driven by a 3-stage low pressure turbine. The high pressure spool consists of a 7-stage high pressure compressor driven by a 1-stage high pressure turbine.

The refan version of the JT8D-9 baseline engine is designated the JT8D-109. The refan design, shown in the lower half of Figure 2, provides a larger-diameter single-stage fan and two additional low compressor stages to replace the current two-stage fan. Inlet guide vanes are retained. Fan modifications include increased spacing between fan and stator blades as well as between fan and inlet guide vanes, and optimum numbers of fan and stator blades, all designed to reduce fan noise.

The increased turbine work extracted to drive the larger fan increases the turbine rotor exit swirl. To reduce swirl, the engine fourth-stage (i.e. low-spool, third-stage) turbine vanes are opened up, the fourth-stage blades are replaced, and the four turbine-exhaust-case struts are recambered with four additional struts added. A new low pressure turbine shaft is also required.

Comparison of salient parameters of the JT8D-9 and -109 is shown in Table 2. The larger fan is seen to increase bypass ratio, engine airflow, and engine thrust levels with a minor decrease in turbine-inlet temperature; and there is a significant increase in fan tip speed. The increased turbine work produces a large reduction in primary jet velocity which is the key factor in jet noise reduction.

The benefits of refan on uninstalled engine performance (lower part of Table 2) include an increase in thrust at takeoff and maximum cruise, and a decrease in TSFC at cruise conditions. These benefits will be traded off against the penalties associated with larger engine diameter and weight in the airplane performance studies discussed later.

A more complete description of the refanned engine and trade studies involved in selection of the final engine cycle, as well as comparisons with the baseline JT8D-9 engine can be found in reference 4.

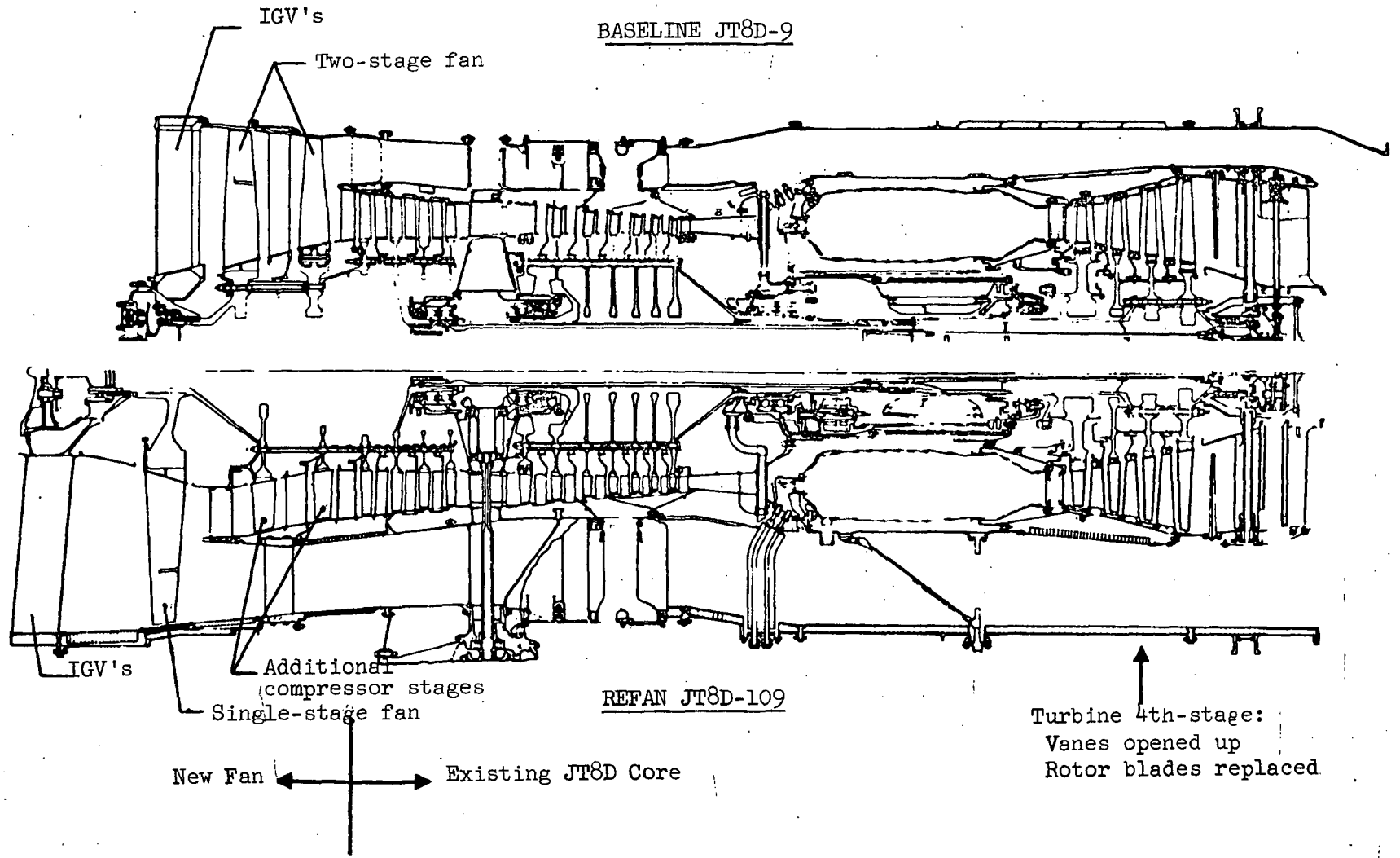


FIGURE 2. - COMPARISON OF BASELINE JT8D-9 AND REFAN JT8D-109 ENGINE

TABLE 2 - COMPARISON OF BASELINE JT8D-9 AND REFAN JT8D-109 CHARACTERISTICS

| Parameter | Existing JT8D-9 | Refan JT8D-109 |
|---|---|---|
| Fan | 2-stage | 1-stage |
| Inlet Guide Vanes | yes | yes |
| Fan Diameter, in. | 40.5 | 49.2 |
| Inlet Diameter, in. | 42.5 | 54.5 |
| Length, in. | 120 | 134 |
| Engine Weight (dry), lbs. | 3218 | 3780 |
| Total Airflow, SLTO, lbs/sec | 319 | 467 |
| Fan Pressure Ratio | 1.97 | 1.67 |
| Fan Tip Speed @ TO, ft/sec | 1420 | 1600 |
| Bypass Ratio | 1.05 | 2.03 |
| Cycle Temperature, °F | 1870 | 1863 |
| Primary Jet Velocity, ft/sec | 1766 | 1445 |
| **Uninstalled Characteristics** | | |
| Thrust, SLS | 14,500 | 16,600 |
| Thrust, T.O. (M=0.22) | 12,750 | 13,750 |
| Thrust, Max. Cruise (Alt=35,000 M=0.8) | 4,540 | 4,720 |
| TSFC, Max. Cruise (Alt=35,000 M=0.8) | 0.802 | 0.770 |

## JT3D-POWERED AIRCRAFT

Phase I of the Refan Program involves extensive nacelle and airplane integration definition (NAID) studies on the five standard-bodied aircraft to evaluate nacelles with different acoustic treatment levels for the refanned engines. These studies consider nacelle preliminary design, nacelle component performance, nacelle subsystem changes, airplane performance, noise reduction, etc. for the different refan nacelles on each of the baseline airplanes. Detailed results of these studies are reported in the NAID's and summarized herein.

### 707-320B Airplane

The 707-320B airplane with JT3D-3B engines was selected as the baseline configuration for the 707 portion of the refan program. Complete results of the 707-320B refan nacelle and airplane integration definition (NAID) studies of Phase I are given in references 5 and 6. The latter reference is the engineering summary report submitted after JT3D program termination.

This section summarizes results of the 707-320B Phase I studies. It describes the refan nacelle configurations, airplane modifications required to install the nacelles, airplane performance, and noise reductions.

Refan Nacelle Configurations - The refan nacelle configurations or treatments studied in Phase I are shown in Figure 3. They consist of:

1) A minimum treatment nacelle (config. 1) which provides a treated-wall inlet, short treated-wall fan ducts with a new simplified fan thrust reverser, and a modified primary thrust reverser;

2) An intermediate treatment nacelle (config. 2) which provides a treated-wall and 1-ring inlet, treated-wall mid-length fan ducts, a new target-type fan thrust reverser, and a modified primary thrust reverser; and

3) A maximum treatment nacelle (config. 3) which is identical to configuration 2 except that it has a 2-ring inlet.

The nacelle designated configuration 4 was dropped early in the program because of the additional funding and testing needed to develop the thrust reverser; this configuration is not considered further herein.

Airplane Modifications - The airplane modifications required to install and integrate these nacelles on the 707-320B baseline airplane consist basically of airframe and nacelle subsystem modifications.

The extent of required airplane structural modifications is primarily dependent on whether or not the nacelle must be moved to insure adequate flutter margins. Flutter characteristics of the 707 are sensitive to nacelle aerodynamics, nacelle strut stiffness and nacelle mass properties. Flutter characteristics are determined from flutter analysis and low-speed wind

tunnel tests which were completed after JT3D program termination. The tests showed that with proper design attention to flutter-frequency limits on the outboard nacelle struts of the 707-320B (and to center-of-gravity location limits in addition on the 707-120B), these airplanes will be flutter-free to certification requirements. Although evaluation of the strut changes are incomplete, possibly the outboard nacelle strut would have to be replaced and the inboard strut reinforced.

Directional control and minimum control speed of the airplane are affected by increased thrust from the refan engines. An estimated 15% increase in rudder hinge moment will be required to maintain acceptable directional control in the event of engine failure. The rudder and actuator attachment fittings and basic airframe structure are adequate to accomplish this change.

Nacelle subsystems requiring some modification include: nacelle ventilating and drain systems, fire detection and extinguishing systems, engine control and instrumentation systems, engine bleed air and starting systems, and engine and nacelle inlet anti-icing systems. The existing turbo-compressor system for cabin pressurization and ventilation would be replaced by a direct engine bleed air system. Also, the minimum treatment nacelle generally retains existing accessory locations, while the intermediate and maximum treatment would require some accessory relocation.

Airplane Performance - Predicted airplane performance, cost and noise characteristics for the JT3D-3B baseline nacelle and the three refan nacelles are shown in Table 3.

A change from baseline nacelle to the refan nacelles is seen to have the following effects: Installed sea-level-static thrust and 150-knots takeoff thrust increased for all three refan nacelles, varying with the degree of treatment. Installed maximum cruise thrust and TSFC values improved for all treatments, varying with the degree of treatment. Operational empty weight (OEW), which reflects any change in engine, nacelle and ballast weights, increased due to the larger refan engines and nacelles, and varies with treatment level. The maximum brake release gross weights (MBRGW) shown are limited by existing airplane fuel tank capacity. The required takeoff field length decreased and climbout height above runway at 3.5 n.mi. increased due to the increased takeoff thrust for the refan engines. The airplane range with full-passenger-payload using the fuel-limited MBRGW's increased for all refan nacelles. Direct operating costs (which include fuel, flight crew, maintenance and insurance) and retrofit cost per airplane (which includes installation), based on retrofit-economic study data of reference 7, both increased with increase in treatment level. A comparison of range values at various payloads is shown in the payload-range curves of Figure 4.

Noise Reduction - The calculated noise reductions in terms of EPNL values at the FAR-36 measuring points for the baseline and refan nacelle aircraft are seen in Table 3 to include: a 15-21 EPNdB decrease on approach, a 16-18 EPNdB decrease on takeoff without power cutback, a 19-21 EPNdB decrease on takeoff with power cutback, and a 13-14 EPNdB decrease on sideline. The current FAR-36 limits are also shown.

A more meaningful measure of noise reduction benefit is the reduction in footprint area from baseline for the refan nacelles. The 90 EPNdB footprint area reductions from baseline given in the NAID (reference 6) for the case of 3° approach/takeoff without cutback at MBRGW are: 84% decrease in area for minimum treatment, 87% decrease for intermediate treatment, and 89% decrease for maximum treatment.

Additional comparisons of FAR-36 noise levels and noise level contours are shown later under "Noise Comparisons for JT3D-Powered Aircraft" wherein 95 EPNdB footprints calculated on a consistent basis for the minimum- and maximum-treatment refan nacelles and the current (baseline) nacelles are compared.

Nacelle Selection - At the time of termination of the JT3D portion of the program, trade studies had not been completed to select the optimum refan nacelle configuration for the 707. Configuration 1, or a variation called 1A which adds a single acoustic inlet ring, appeared particularly promising. However, further trade studies and model tests would be necessary to select the best level of acoustic treatment. The additional acoustic benefits obtainable in going from minimum to intermediate treatment must be weighed against increases in operating costs and the initial investment cost.

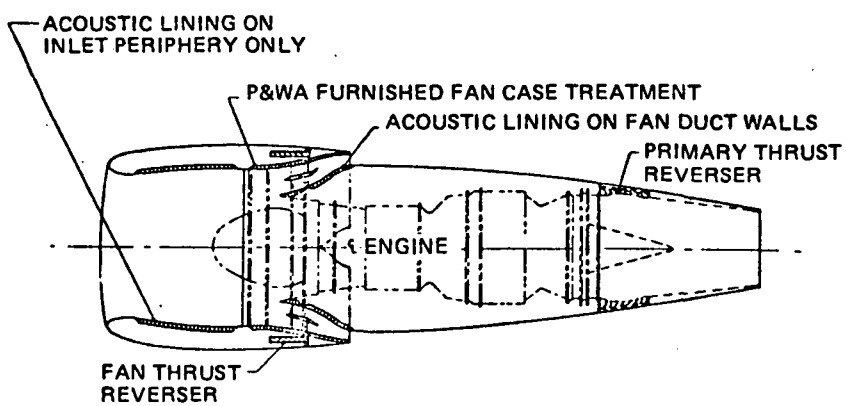


Configuration 1

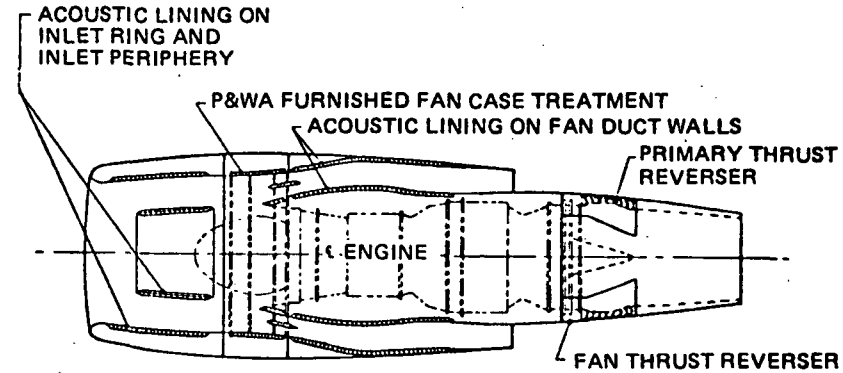


Configuration 2

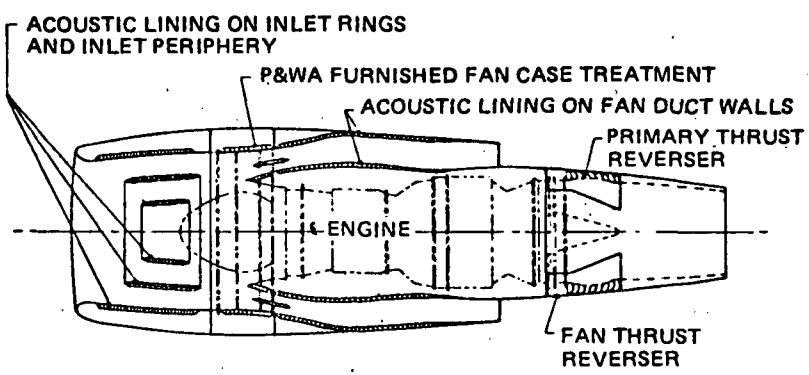


Configuration 3

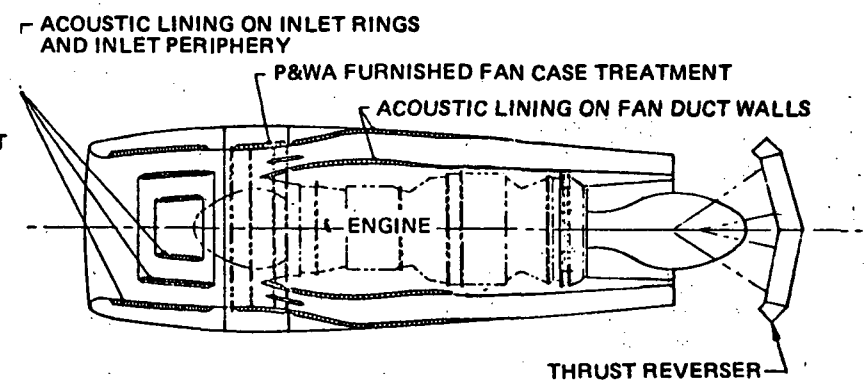


Configuration 4

FIGURE 3. - 707-320B/JT3D-9 REFAN NACELLE CONFIGURATIONS

TABLE 3- COMPARISON OF 707-320B AIRPLANE PERFORMANCE, COST & NOISE CHARACTERISTICS FOR REFAN NACELLES (TREATMENTS)

| AIRPLANE PERFORMANCE/CHARACTERISTICS | BASELINE | REFAN NACELLES (treatments) Minimum | * | Intermediate | * | Maximum | * |
|---|---|---|---|---|---|---|---|
| Installed Takeoff: | | | | | | | |
| SLS Thrust, lbs. (Std. day) | 17,200 | 20,000 | 16.3 | 19,900 | 15.7 | 19,700 | 14.5 |
| SLTO Thrust, lbs. (150-kts) | 14,750 | 16,300 | 10.5 | 16,250 | 10.2 | 16,200 | 9.8 |
| Installed Cruise: | | | | | | | |
| Max. Cruise Thrust, lbs. (alt=35,000 M = 0.83) | 4,220 | 4,310 | 2.1 | 4,400 | 4.3 | 4,380 | 3.8 |
| Max. Cruise TSFC, lbs/hr/lb | 0.913 | 0.878 | -3.8 | 0.868 | -4.9 | 0.872 | -4.5 |
| Weights: | | | | | | | |
| Operational Empty (OEW), lbs. | 145,000 | 147,025 | 1.4 | 148,925 | 2.7 | 149,145 | 2.9 |
| Max. Brake Release Gross (MBRGW), lbs. | 333,600 | 337,500[1] | 1.2 | 339,400[1] | 1.7 | 339,600[1] | 1.8 |
| Takeoff & Climbout: @ MBRGW | | | | | | | |
| Takeoff Field Length (TOFL), ft. | 11,350 | 10,260 | -9.6 | 10,370 | -8.6 | 10,530 | -7.2 |
| Height Above Runway @ 3.5 n.mi. | 940 | 1,170 | 24.5 | 1,160 | 23.4 | 1,120 | 19.1 |
| Range: | | | | | | | |
| Full-Passenger-Payload[2] Range, n.mi | 4,770 | 4,840 | 1.5 | 4,880 | 2.3 | 4,850 | 1.7 |
| Costs: | | | | | | | |
| DOC, $/st. mi. | 1.466 | 1.466 | -0.14 | 1.470 | 0.29 | 1.471 | 0.33 |
| Retrofit cost, million $'s/airplane | | 1.549 | | 2.205 | | 2.220 | |

Notes: [1] Practical growth MBRGW's as limited by existing fuel tank capacity.

[2] At practical growth limit MBRGW.

*Percent change from baseline

| NOISE REDUCTION (FAR-36) | FAR-36 Limit | BASELINE | REFAN NACELLES (treatments) Minimum | ** | Intermediate | ** | Maximum | ** |
|---|---|---|---|---|---|---|---|---|
| Approach, EPNdB | 106 | 120 | 105 | -15 | 102 | -18 | 99 | -21 |
| Takeoff w/o Cutback | 104 | 115 | 99 | -16 | 98 | -17 | 97 | -18 |
| Takeoff with Cutback | 104 | 114 | 95 | -19 | 93 | -21 | 93 | -21 |
| Sideline | 106 | 108 | 95 | -13 | 94 | -14 | 94 | -14 |

**$\Delta$ EPNdB from baseline

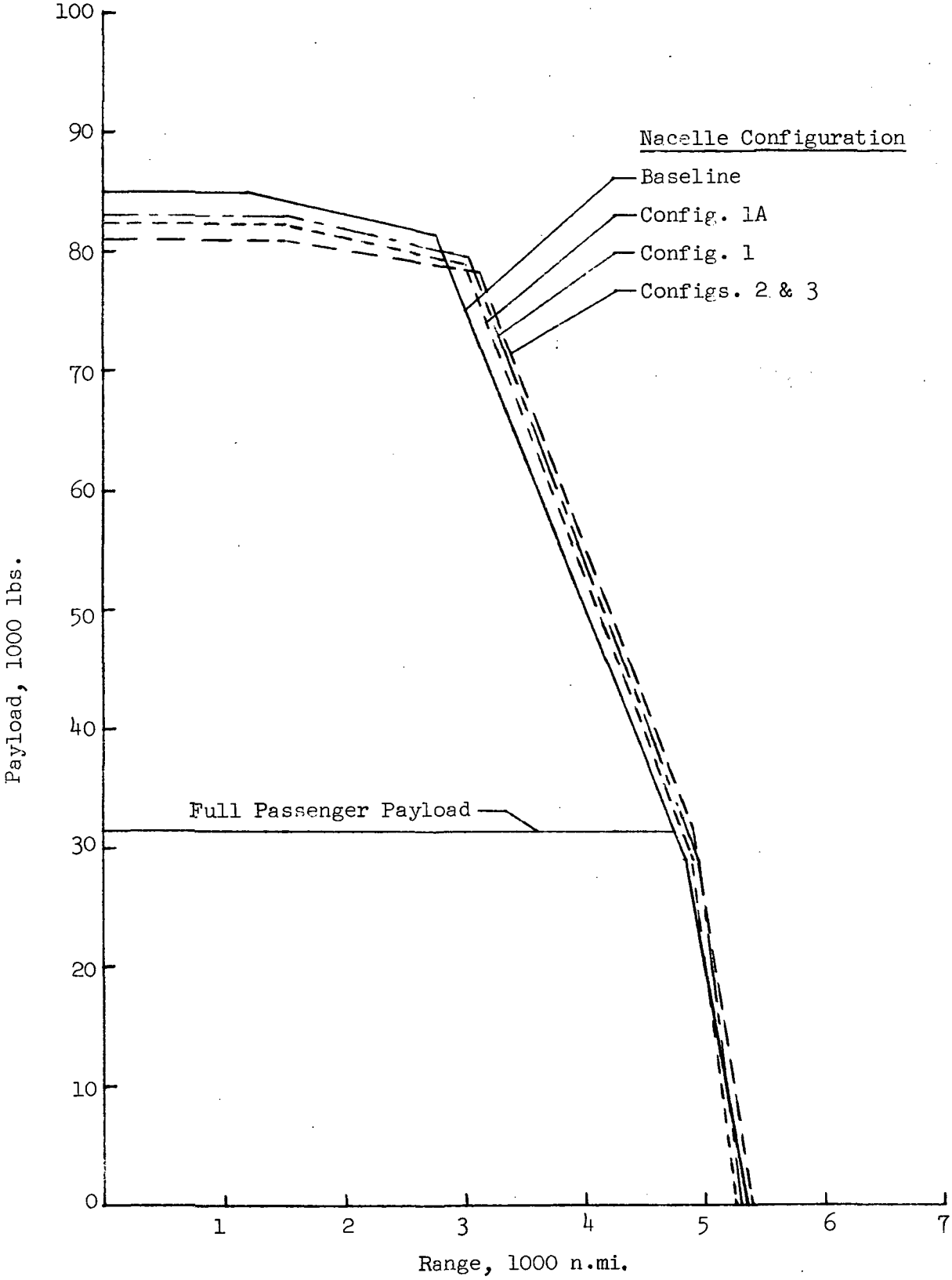


FIGURE 4.- COMPARISON OF 707-320B PAYLOAD-RANGE CURVES FOR REFAN NACELLES

DC-8-61 Airplane

The DC-8-61 airplane with JT3D-9 engines was selected as the baseline configuration for the DC-8-51 through -55 and -61 models which all feature the short-duct pod and over-wing pylon. Complete results of the DC-8-61 refan nacelle and airplane integration definition (NAID) studies of Phase I are given in reference 8 which is the second-submittal NAID for the DC-8-61/JT3D-9.

This section summarizes results of the DC-8-61 Phase I studies. It describes the refan nacelle configurations, airplane modifications to install the nacelles, airplane performance, and noise reductions.

Refan Nacelle Configurations - The refan nacelle configurations studied in Phase I are shown in Figure 5. They consist of:

1) A minimum treatment nacelle which provides a treated-wall inlet, and treated-wall short bifurcated fan ducts which retain the current side-cascade fan thrust reversers and clamshell-cascade primary thrust reverser. These thrust reversers would be modified for the larger refan engine;

2) An intermediate treatment nacelle which is basically the minimum treatment nacelle with addition of a treated-ring in the inlet and a treated-circumferential ring in the short fan ducts; and

3) A maximum treatment nacelle which provides a treated-wall and 1-ring inlet, treated-wall full-length bifurcated fan ducts, and a scaled-up DC-8-53 target-type fan-primary thrust reverser.

Airplane Modifications - The airplane modifications required to install and integrate these nacelles on the DC-8-61 airplane consist of airframe structure and airframe system modifications.

The airframe structure modifications will include changes to the pylon and wing. The pylon changes will consist of recontouring the apron, fairings and skins for the modified pods and rerouting environmental systems. Due to increased engine weight and center of gravity shift, some pylon structural reinforcements may be necessary. With the maximum treatment nacelle, all structure below and aft of the main pylon structure box would be replaced with a new unit including a translating thrust reverser stang.

The present wing has adequate static strength but, due to increased engine weight, may require some structural reinforcing to maintain flutter margins.

The only airframe system modification anticipated with the maximum treatment nacelle is a new hydraulic system for the long-duct thrust reverser to replace the current short-duct pneumatic reverser system.

Airplane Performance - Predicted airplane performance characteristics for the JT3D-3B baseline nacelle and the three refan nacelles are shown in Table 4.

A change from baseline nacelle to the refan nacelles is seen to have a number of significant effects: Installed sea-level-static thrust and sea-level M=0.27 takeoff thrust increased for all refan nacelles (varying with the degree of treatment). Installed maximum cruise thrust and TSFC at typical-cruise thrust improved for all three treatments. The increases in operating empty weight (OEW) reflect the increase in engine and nacelle weights for the larger refan engines. Maximum brake release gross weight is held at the baseline value. Takeoff field length is decreased and height above runway is increased for all treatments due to increased thrust of the refan engines. Airplane range with full-passenger-payload is essentially maintained, as is the 55%-full-passenger-payload (typical mission) range. DOC costs, based on preliminary retrofit-economic study data of reference 9, and retrofit costs, based on retrofit-economic study data of reference 10, both increase with increase in nacelle treatment level. A comparison of range values at various payloads is shown in Figure 6.

Noise Reduction - The noise reductions in terms of EPNL values at the FAR-36 measuring points in changing from baseline to refan nacelles are seen in Table 4 to include: a 13-21 EPNdB decrease on approach, a 9-14 EPNdB decrease on takeoff, a 14-19 EPNdB decrease on takeoff with power cutback, and a 7-10 EPNdB decrease on sideline.

The 90 EPNdB footprint area reductions from baseline given in the NAID (reference 8) for 3° approach/takeoff without cutback for a typical mission (not given for MBRGW) are: 74% area decrease for minimum treatment, 78% decrease for intermediate treatment, and 83% decrease for maximum treatment.

Additional comparisons of FAR-36 noise levels and noise level contours for the baseline and refan nacelles are shown later under Noise Comparisons for JT3D-Powered Aircraft.

Nacelle Selection - As was the case for the 707-320B, trade studies on nacelle configuration selection for the DC-8-61 were in progress at the time of termination of the JT3D part of the program. Further trade studies and model tests are needed to permit selection of an optimum refan nacelle. The additional acoustic benefits obtainable with maximum treatment must be weighed against increases in operating costs and initial investment cost.

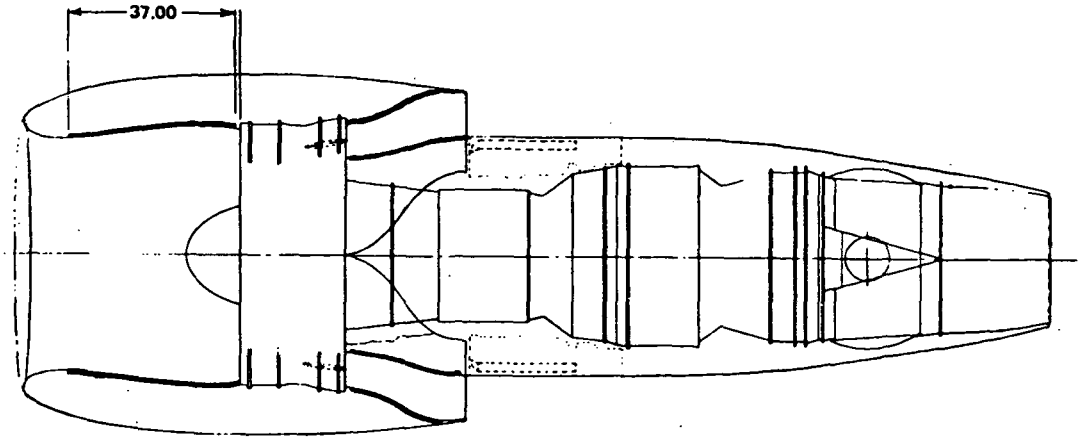


Minimum Treatment

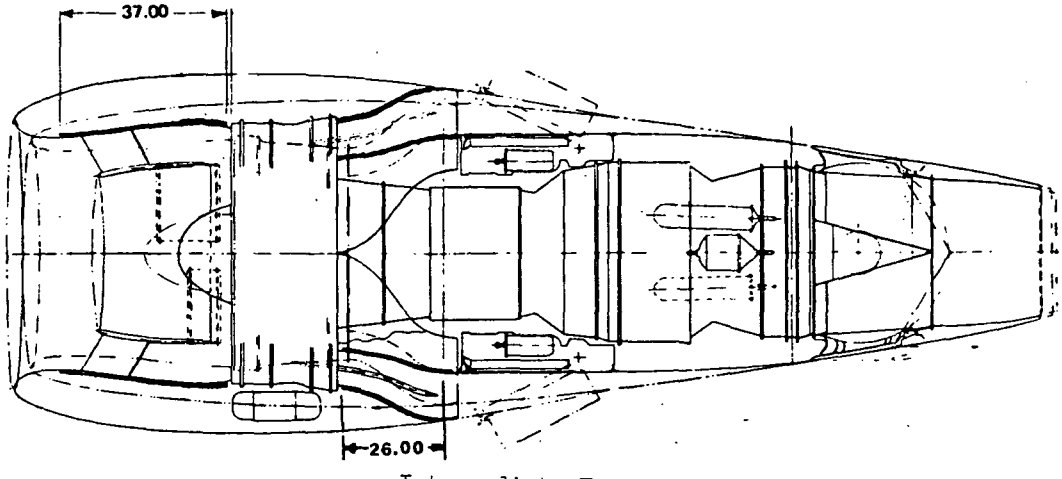


Intermediate Treatment

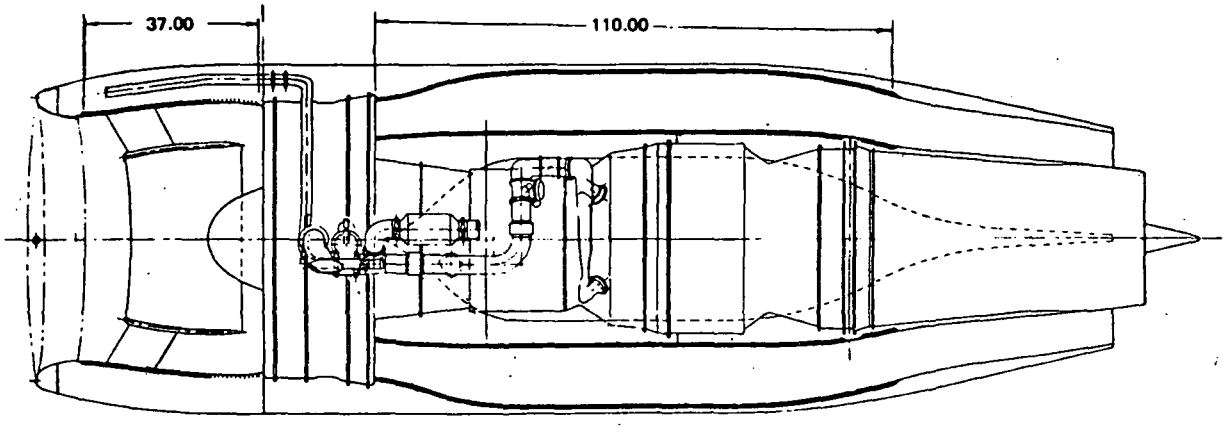


Maximum Treatment

FIGURE 5. - DC-8-61/JT3D-9 REFAN NACELLE CONFIGURATIONS

TABLE 4 - COMPARISON OF DC-8-61 AIRPLANE PERFORMANCE, COST & NOISE CHARACTERISTICS FOR REFAN NACELLES (TREATMENTS)

| AIRPLANE PERFORMANCE/CHARACTERISTICS | BASELINE | REFAN NACELLES (treatments) Minimum | * | Intermediate | * | Maximum | * |
|---|---|---|---|---|---|---|---|
| **Installed Takeoff:** | | | | | | | |
| SLS Thrust, lbs. (Std. day) | 17,000 | 18,900 | 11.2 | 18,400 | 8.2 | 19,150 | 12.6 |
| SLTO Thrust, lbs. (M=0.27) | 14,120 | 14,950 | 5.9 | 14,600 | 3.4 | 14,800 | 4.8 |
| **Installed Cruise:** | | | | | | | |
| Max. Cruise Thrust, lbs. (alt=35,000 M = 0.80) | 3,752 | 3,769 | 0.5 | 3,874 | 3.3 | 3,947 | 5.2 |
| Max. Cruise TSFC, lbs/hr/lb | 0.917 | 0.905 | -1.3 | 0.920 | 0.3 | 0.907 | -1.1 |
| Typical-Cruise-Thrust (3250-lbs.) TSFC | 0.947 | 0.918 | -3.1 | 0.932 | -1.6 | 0.918 | -3.1 |
| **Weights:** | | | | | | | |
| Operational Empty (OEW), lbs. | 161,237 | 163,809 | 1.6 | 164,473 | 2.0 | 164,905 | 2.3 |
| Max. Brake Release Gross (MBRGW), lbs. | 325,000 | 325,000 | 0 | 325,000 | 0 | 325,000 | 0 |
| **Takeoff & Climbout:** @MBRGW | | | | | | | |
| Takeoff Field Length (TOFL), ft. | 10,000 | 9,500 | -5.0 | 9,500 | -5.0 | 9,700 | -3.0 |
| Height Above Runway @ 3.5 n.mi | 890 | 1,050 | 18.0 | 970 | 9.0 | 1,040 | 16.9 |
| **Range:** | | | | | | | |
| Full-Passenger-Payload Range, n.mi | 3,250 | 3,300 | 1.5 | 3,200 | -1.5 | 3,265 | 0.5 |
| 55%-Full-Passenger-Payload Range, n.mi | 3,500 | 3,500 | 0 | 3,450 | -1.4 | 3,515 | 0.4 |
| **Costs:** | | | | | | | |
| DOC, $/st.mi. | 1.628 | 1.656 | 1.73 | 1.672 | 2.69 | 1.664 | 2.23 |
| Retrofit cost, million $'s/airplane | | 2.513 | | 2.662 | | 2.736 | |

*percent change from baseline

| NOISE REDUCTION (FAR-36) | FAR-36 Limit | BASELINE | REFAN NACELLES (treatments) Minimum | ** | Intermediate | ** | Maximum | ** |
|---|---|---|---|---|---|---|---|---|
| Approach, EPNdB | 106 | 117 | 104 | -13 | 100 | -17 | 96 | -21 |
| Takeoff w/o Cutback | 104 | 116 | 107 | - 9 | 107 | - 9 | 102 | -14 |
| Takeoff with Cutback | 104 | 117 | 103 | -14 | 102 | -15 | 98 | -19 |
| Sideline | 106 | 103 | 96 | - 7 | 96 | - 7 | 93 | -10 |

** ΔEPNdB from baseline

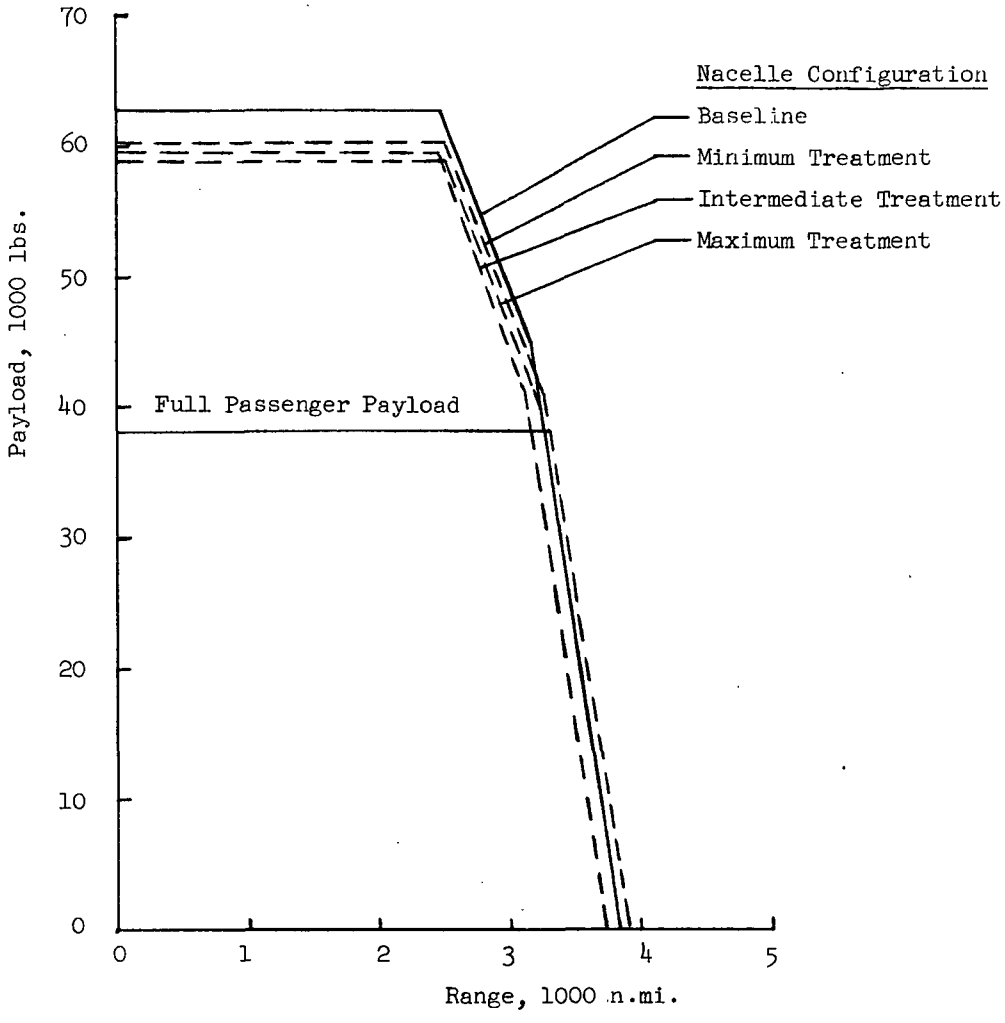


FIGURE 6.- COMPARISON OF DC-8-61 PAYLOAD-RANGE CURVES FOR REFAN NACELLES

DC-8-63 Airplane

The DC-8-63 was the latest version of the DC-8 airplane in production and uses JT3D engines installed in long-duct pods with undercut pylons. Hence it was selected as the baseline configuration for the "long-pod" portion of the DC-8 refan program. Complete results of the DC-8-63 refan nacelle and airplane integration definition (NAID) studies of Phase I are given in reference 11 which is the second-submittal NAID for the DC-8-63/JT3D-9.

This section summarizes results of the DC-8-63 Phase I studies. It describes the refan nacelle configurations, airplane modifications required to install the nacelles, airplane performance, and noise reductions.

Refan Nacelle Configurations - The refan nacelle configurations studied in Phase I are shown in Figure 7. Only two treatment configurations were evaluated:

1) A minimum treatment nacelle which provides a treated-wall inlet, full-length partially-treated bifurcated fan ducts, and a modification of the current target-type fan-primary thrust reverser; and

2) A maximum treatment nacelle which is basically the minimum treatment configuration with the addition of an inlet treated-ring and additional treatment in the fan ducts.

Airplane Modifications - The airplane modifications required to install and integrate these refan nacelles on the DC-8-63 airplane consist of airframe structure modifications. The airframe structure modifications include changes to the pylon and wing. The pylon changes consist of recontouring of the apron, fairings and skins for the modified pods and rerouting environmental systems. Due to increased engine weight, forward shift of the center of gravity, and flutter considerations, some pylon structural reinforcements may be necessary.

The present wing has adequate static strength but, due to increased engine weight and center-of-gravity shift, it may require some structural reinforcement adjacent to the pylon to maintain the required flutter margins.

Airplane Performance - Predicted airplane performance characteristics for the JT3D-3B baseline nacelle and the two refan nacelles are shown in Table 5.

A change from baseline nacelle to the refan nacelles is seen to have the following effects: Installed sea-level-static thrust and sea-level M=0.27 takeoff thrust increased for both refan treatments. Installed maximum cruise thrust and TSFC values at maximum-cruise and typical-cruise thrust were maintained or slightly improved for both treatments. The OEW increases are about the same for both treatments and reflect engine and nacelle weight increases for the refan pods. Maximum brake release gross weight is held constant at the baseline value. Takeoff field length decreased and height above runway

increased for both treatments due to increased refan thrust. Airplane range for both full-passenger-payload and 55%-full-passenger-payload conditions decreased slightly. DOC costs, based on data in reference 9, and retrofit costs, based on data in reference 10, both increase with increase in nacelle treatment level. A comparison of range values at other payloads is shown in Figure 8.

Noise Reduction - The noise reductions in terms of EPNL values at the FAR-36 measuring points in changing from baseline to refan nacelles are seen in Table 5 to include: a 14-18 EPNdB decrease on approach, an 11-12 EPNdB decrease on takeoff, a 12-15 EPNdB decrease on takeoff with cutback, and a 7-9 EPNdB decrease on sideline.

The 90 EPNdB contour area reductions from baseline reported in the NAID (reference 11) for 3° approach/takeoff without cutback for a typical mission (not given for MBRGW) are: 79% decrease in area for minimum treatment and an 82% decrease for maximum treatment.

Additional comparisons of FAR-36 noise levels and noise level contours for the baseline and refan nacelles are shown under "Noise Comparisons for JT3D-Powered Aircraft" in the section that follows.

Nacelle Selection - At the time of termination of this part of the program, trade studies on the DC-8-63 had not progressed to the point of final nacelle configuration selection, as was the case for the DC-8-61.

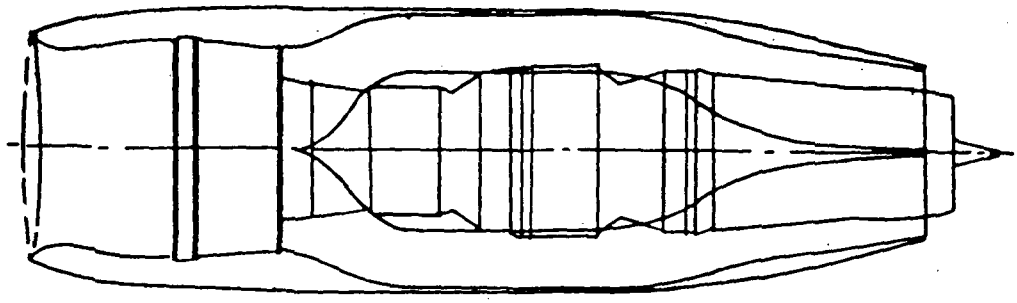

Existing JT3D-3B Nacelle

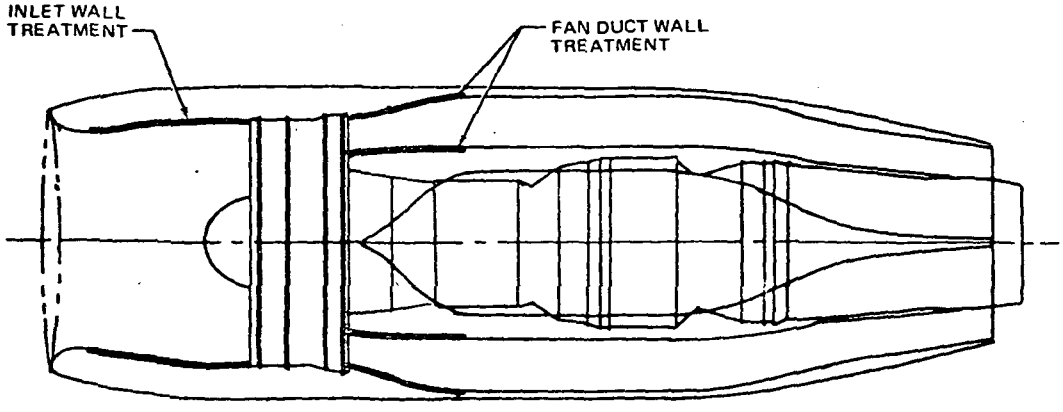


Minimum Treatment

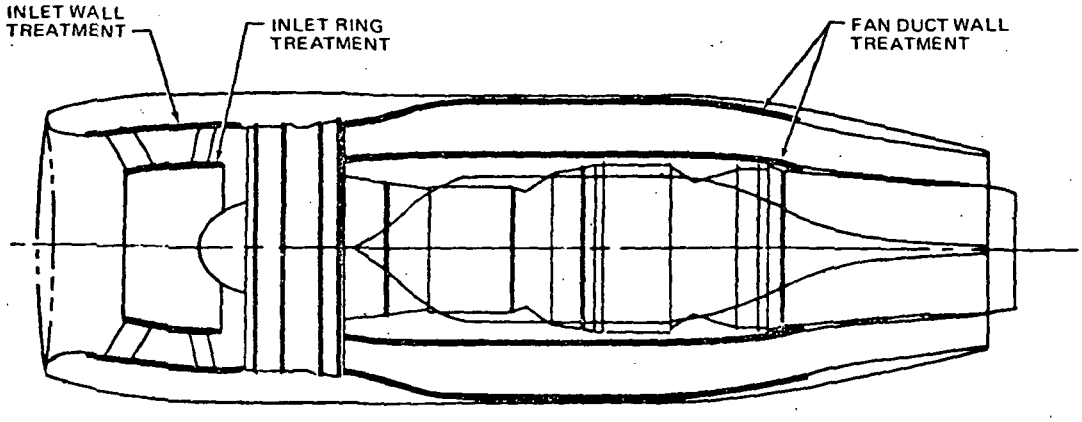


Maximum Treatment

FIGURE 7. - DC-8-63/JT3D-9 REFAN NACELLE CONFIGURATIONS

TABLE 5 - COMPARISON OF DC-8-63 AIRPLANE PERFORMANCE, COST & NOISE CHARACTERISTICS FOR REFAN NACELLES (TREATMENTS)

| AIRPLANE PERFORMANCE/CHARACTERISTICS | BASELINE | REFAN NACELLES (treatments) Minimum | * | Intermediate | | Maximum | * |
|---|---|---|---|---|---|---|---|
| Installed Takeoff: | | | | | | | |
| SLS Thrust, lbs. (Std. day) | 17,280 | 19,120 | 10.6 | | | 19,200 | 11.1 |
| SLTO Thrust, lbs. (M=0.27) | 13,875 | 14,900 | 7.4 | | | 14,800 | 6.7 |
| Installed Cruise: | | | | | | | |
| Max. Cruise Thrust, lbs. (alt=35,000 M = 0.80) | 3,845 | 3,970 | 3.3 | | | 3,947 | 2.7 |
| Max. Cruise TSFC, lbs/hr/lb | 0.892 | 0.902 | 1.1 | | | 0.907 | 1.7 |
| Typical-Cruise-Thrust (3270-lbs) TSFC | 0.916 | 0.914 | -0.2 | | | 0.918 | 0.2 |
| Weights: | | | | | | | |
| Operational Empty (OEW), lbs. | 161,638 | 164,410 | 1.7 | | | 164,962 | 2.1 |
| Max. Brake Release Gross (MBRGW), lbs. | 350,000 | 350,000 | 0 | | | 350,000 | 0 |
| Takeoff & Climbout: @ MBRGW | | | | | | | |
| Takeoff Field Length (TOFL), ft. | 10,900 | 10,000 | -8.3 | | | 9,900 | -9.2 |
| Height Above Runway @ 3.5 n.mi. | 800 | 1,075 | 34.4 | | | 950 | 18.8 |
| Range: | | | | | | | |
| Full-Passenger-Payload Range, n.mi. | 4,100 | 3,900 | -4.9 | | | 3,875 | -5.5 |
| 55%-Full-Passenger-Payload Range, n.mi. | 4,900 | 4,750 | -3.1 | | | 4,700 | -4.1 |
| Costs: | | | | | | | |
| DOC, $/st.mi. | 1.497 | 1.530 | 2.25 | | | 1.540 | 2.87 |
| Retrofit cost, million $'s/airplane | | 2.471 | | | | 2.349 | |

*Percent change from baseline

| NOISE REDUCTION (FAR-36) | FAR-36 limit | BASELINE | REFAN NACELLES (treatments) Minimum | ** | Intermediate | | Maximum | ** |
|---|---|---|---|---|---|---|---|---|
| Approach, EPNdB | 106 | 114 | 100 | -14 | | | 96 | -18 |
| Takeoff w/o Cutback | 104 | 115 | 104 | -11 | | | 103 | -12 |
| Takeoff with Cutback | 104 | 113 | 101 | -12 | | | 98 | -15 |
| Sideline | 106 | 102 | 95 | - 7 | | | 93 | - 9 |

** Δ EPNdB from baseline

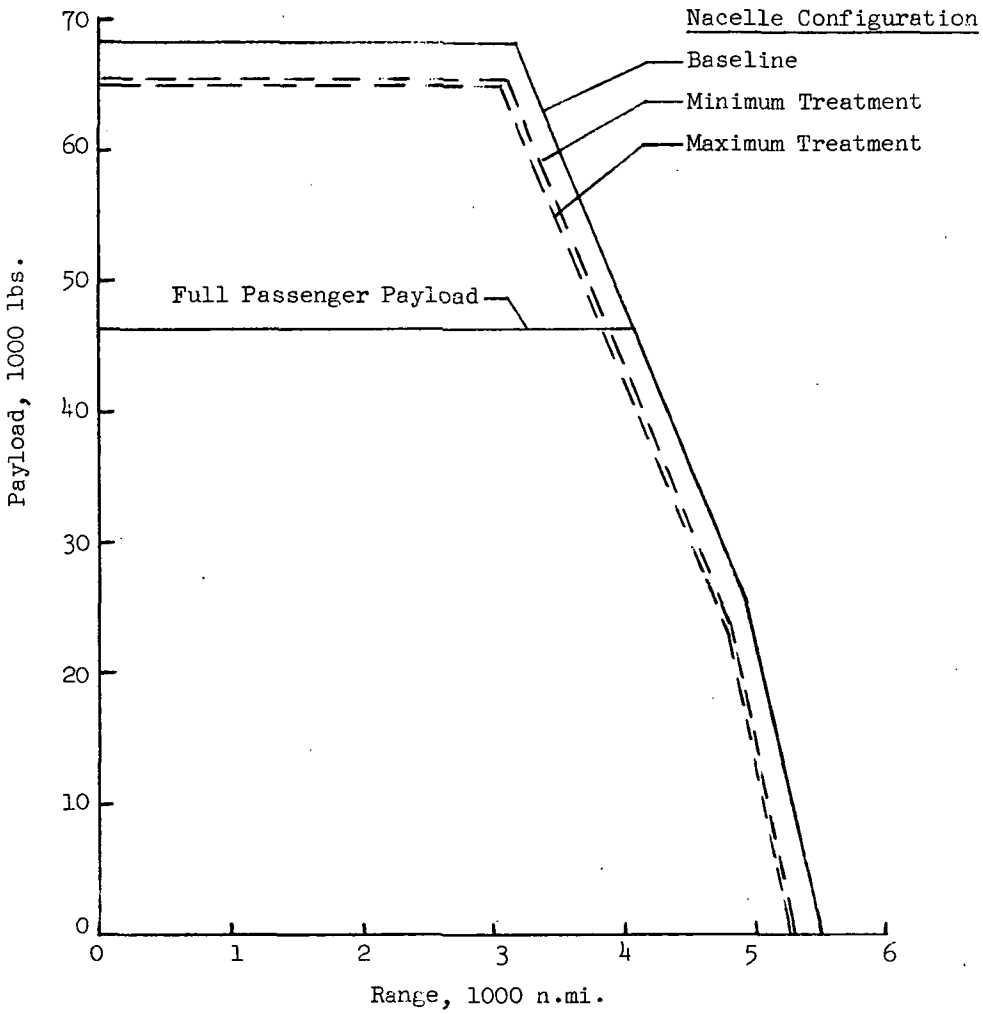


FIGURE 8.- COMPARISON OF DC-8-63 PAYLOAD-RANGE CURVES FOR REFAN NACELLES

## Noise Comparisons for JT3D Powered Aircraft

In this section, as in a similar section later for the JT8D-powered aircraft, the noise reduction benefits of refanned aircraft with various levels of nacelle treatment over the current (baseline) aircraft are shown in terms of FAR-36 noise levels and noise exposure contours (footprints).

FAR-36 Levels - Noise levels at the FAR-36 noise measurement conditions (point measurements) for approach, takeoff with power cutback and sideline are compared in Table 6 for both 707-320B and DC-8-61 aircraft. The current (baseline) aircraft values are calculated values corrected to actual-flyover noise measurements. The refanned aircraft values for various nacelle treatments, taken from the NAID's, were similarly calculated with anticipated actual-flyover corrections included. These values are all compared ($\Delta$EPNdB's given) with the FAR-36 standards which are values proposed by FAA to apply to both new and existing standard-bodied aircraft after 1978.

The EPNL values relative to the FAR-36 standard show that a refanned JT3D aircraft with a maximum treatment nacelle would be 5 to 13 EPNdB below FAR-36.

These tabular values are presented in bar-graph form for approach and takeoff in Figure 9. This visual comparison illustrates the potential benefits of refan depending on treatment level.

Footprints - A more meaningful measure of noise-reduction benefits is the reduction in noise footprint area which is representative of the number of people exposed to high noise levels. Single-event noise exposure contours (footprints) discussed in this section have been calculated at the NASA-Lewis Research Center using a program developed by the DOT/NASA Joint Office of Noise Abatement. The input data, consisting of EPNL versus slant-range noise data, were supplied by Boeing and McDonnell-Douglas for the various aircraft and refan nacelle treatments. Because of the sensitivity of footprint areas to input data and calculational procedure, it is important to compare footprints calculated in a consistent manner. Relative changes in area are more significant than absolute areas. Because of this, results of in-house-calculated footprints are presented herein rather than comparisons between the numerous footprints presented in the various contractor documents.

Figure 10 shows predicted 95 EPNdB footprint contours for the 707-320B aircraft. The current (baseline) aircraft is compared with a refanned aircraft with maximum and minimum treatment refan nacelles. Similar footprint area comparisons are illustrated for the DC-8-61 in Figure 11. In both figures, the footprints shown are for maximum takeoff gross weight conditions. The table included on each figure illustrates the effectiveness of refan in reducing both the approach and takeoff footprint areas. Area reductions expressed in percent of current (baseline) noise exposure area show the large improvement potential of the refan retrofit options.

Since the new wide-body aircraft provides significant noise relief to the near-airport community compared to the exposure of current standard-bodied aircraft, it is of interest to compare wide-body footprints with refan footprints. Such a comparison is made in Figure 12 for the 747-200 and a refanned 707-320B with maximum and minimum treatment. The potential for 707 refan is to provide substantially less noise exposure than the current 4-engine wide-body aircraft on both the approach and takeoff portions of the flight track.

TABLE 6 - NOISE LEVELS AT FAR-36 MEASUREMENT POINTS FOR BASELINE AND RETROFITTED JT3D-POWERED AIRCRAFT

| AIRCRAFT | FAR-36 MEASUREMENT | EFFECTIVE PERCEIVED NOISE LEVELS - EPNdB | | | | | | | | |
|---|---|---|---|---|---|---|---|---|---|---|
| | | FAR-36 STANDARD | CURRENT AIRCRAFT | | REFANNED AIRCRAFT | | | | | |
| | | | | | MINIMUM | | INTERMEDIATE | | MAXIMUM | |
| 707-320B 333,500# MTOGW | Approach | 106.3 | 120.5 | 14.2* | 105.1 | - 1.2* | 101.9 | - 4.4* | 99.1 | - 7.2* |
| | Takeoff** | 103.8 | 114.0 | 10.2 | 94.7 | - 9.1 | 93.3 | -10.5 | 93.0 | -10.8 |
| | Sideline | 106.3 | 107.5 | 1.2 | 94.8 | -11.5 | 94.2 | -12.1 | 93.8 | -12.5 |
| DC-8-61 325,000# | Approach | 106.2 | 117.0 | 10.8 | 104.0 | - 2.2 | 100.0 | - 6.2 | 96.0 | -10.2 |
| | Takeoff** | 103.6 | 117.0 | 13.4 | 103.0 | - 0.6 | 102.0 | - 1.6 | 98.0 | - 5.6 |
| | Sideline | 106.2 | 103.0 | -3.2 | 96.0 | -10.2 | 96.0 | -10.2 | 93.0 | -13.2 |

* $\Delta$ EPNdB relative to FAR-36
** Cutback power on takeoff per FAR-36

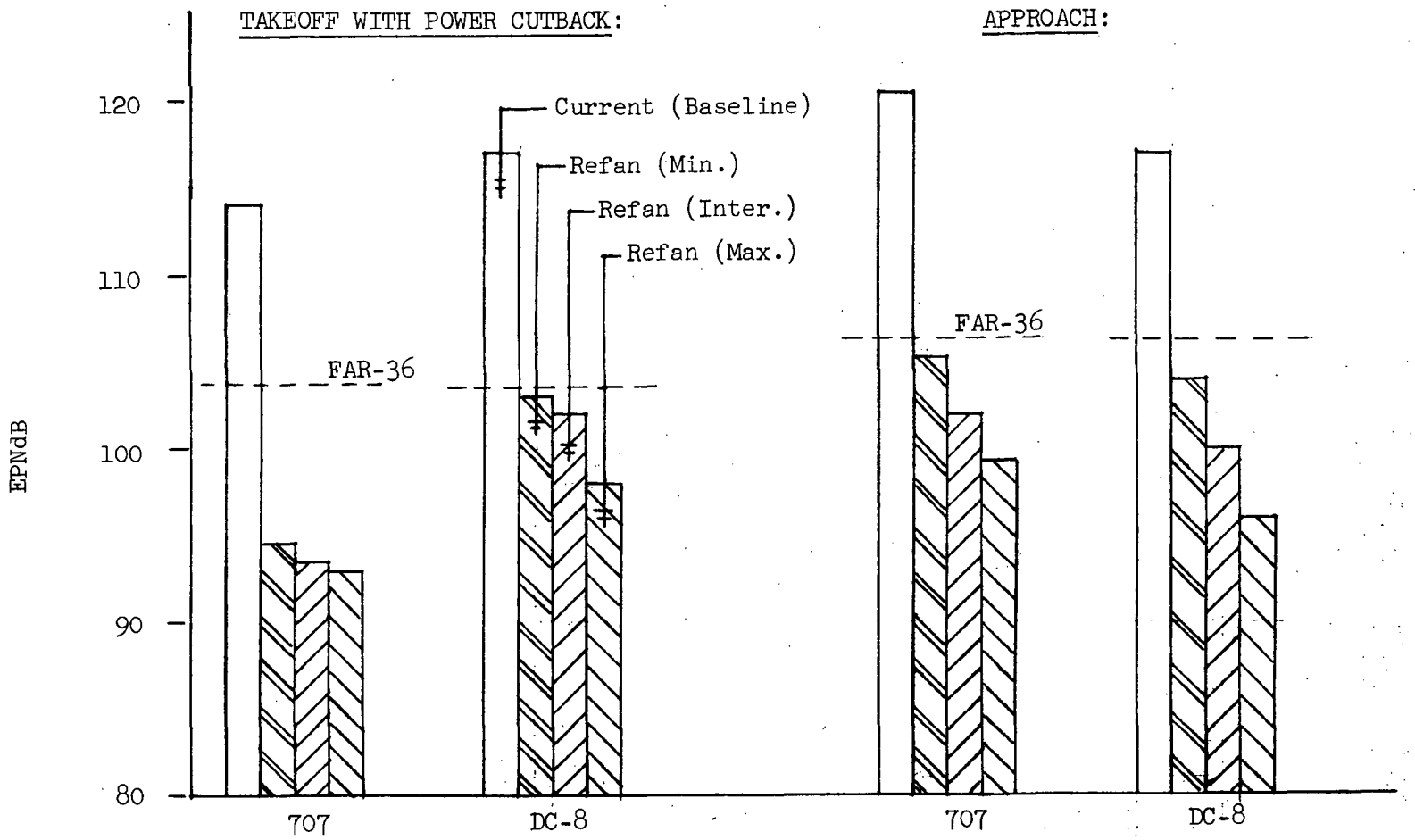


FIGURE 9. - NOISE LEVELS AT FAR-36 MEASURING STATIONS FOR JT3D-POWERED AIRCRAFT

| CONFIGURATION | Footprint Area, Sq. Mi. | | | Area Reduction from Current, Percent |
|---|---|---|---|---|
| | Approach | Takeoff | Total | |
| Current | 8.9 | 23.2 | 31.1 | - |
| Refan (Min.) | 1.4 | 1.4 | 2.6 | 92 |
| Refan (Max.) | 0.6 | 1.0 | 1.5 | 95 |

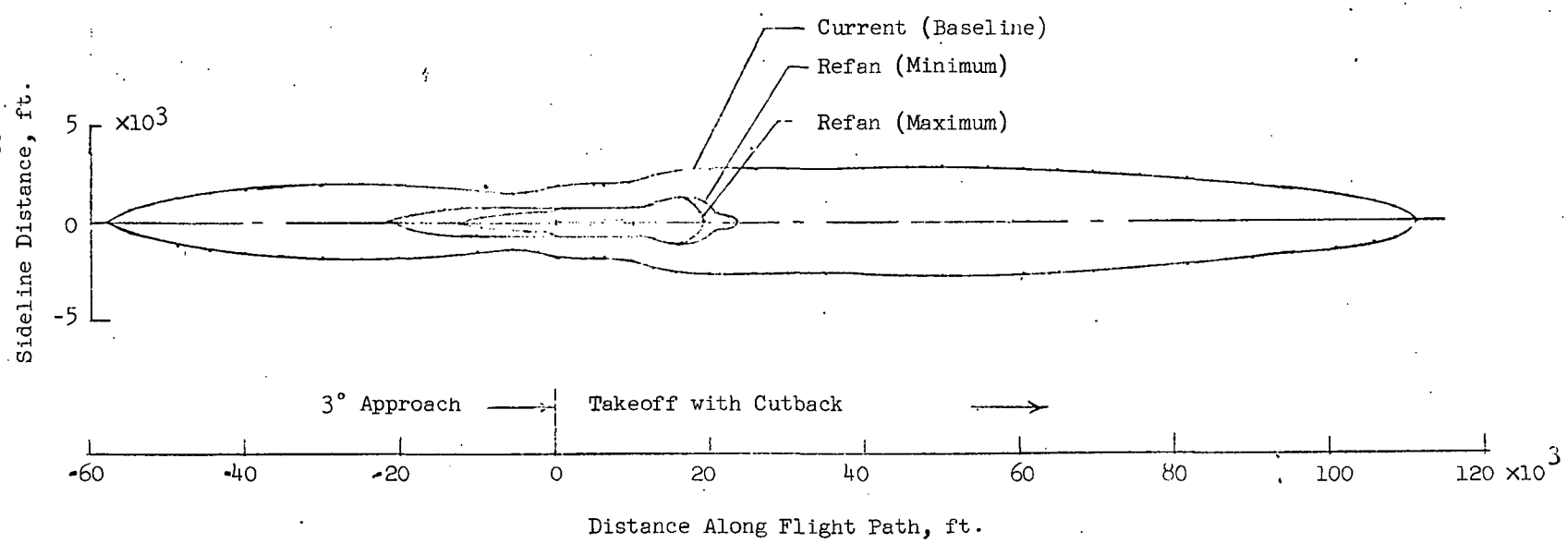


FIGURE 10. - 95-EPNdB FOOTPRINT COMPARISON FOR 707-320B AIRCRAFT

| CONFIGURATION | Footprint Area, Sq. Mi. | | | Area Reduction from Current, Percent |
|---|---|---|---|---|
| | Approach | Takeoff | Total | |
| Current | 6.9 | 24.5 | 30.5 | - |
| Refan (Min.) | 1.3 | 5.0 | 6.0 | 80 |
| Refan (Max.) | 0.3 | 2.2 | 2.3 | 92 |

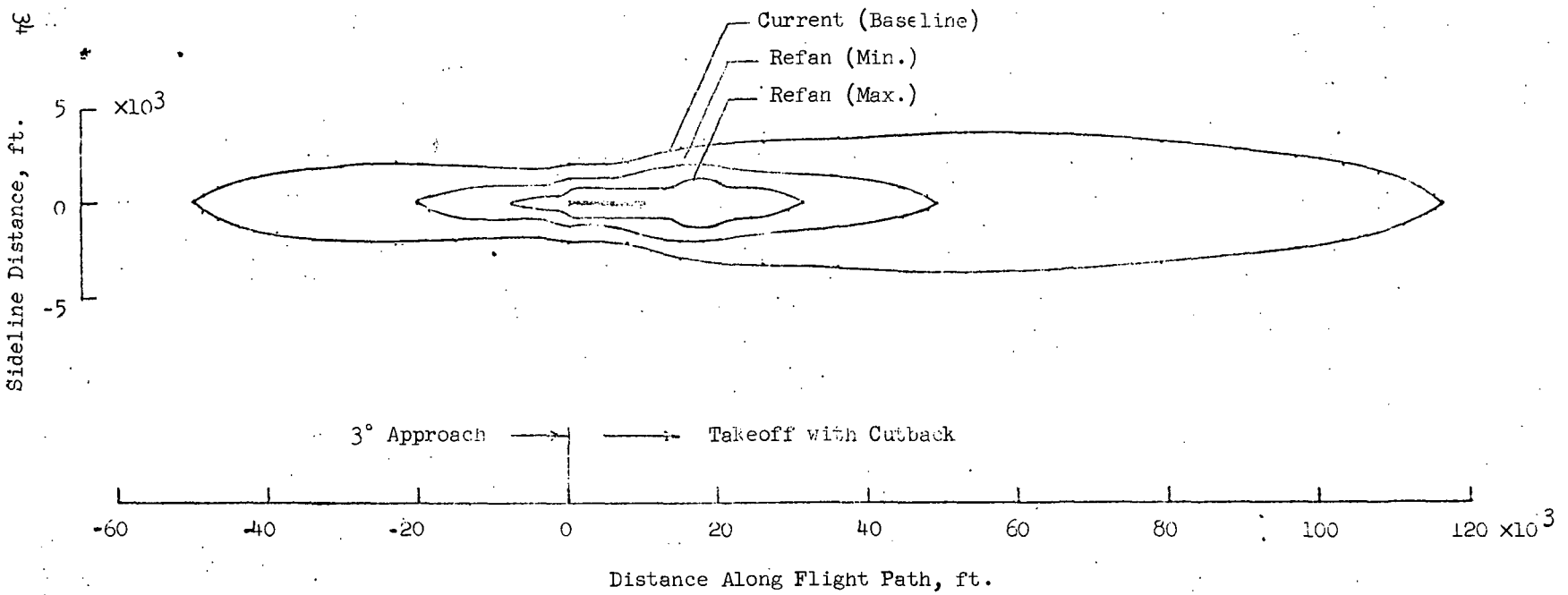


FIGURE 11.- 95-EPNdB FOOTPRINT COMPARISON FOR DC-8-61 AIRCRAFT

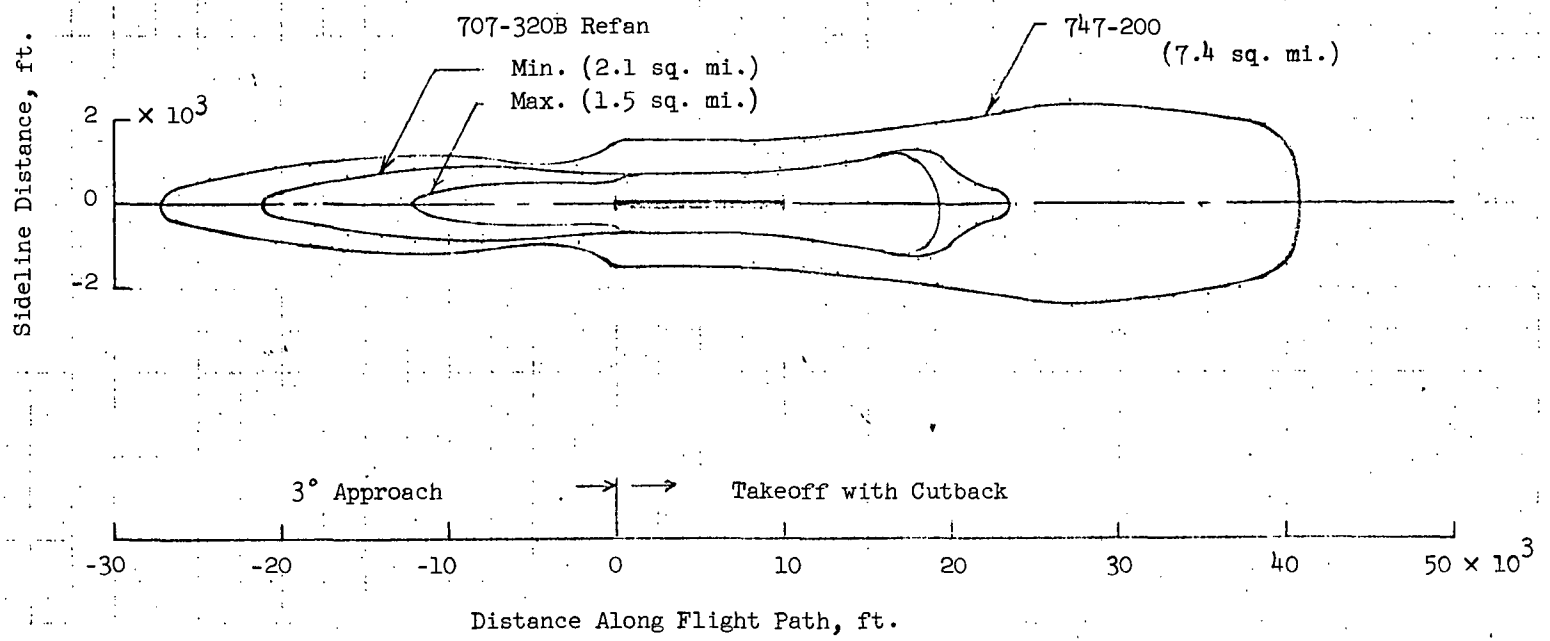


FIGURE 12.- 95-EPNdB FOOTPRINT COMPARISON FOR 707 REFAN AND 747 AIRCRAFT

## JT8D-POWERED AIRCRAFT

### 727 Airplane

The 727-200 airplane with JT8D-9 engines was selected as the baseline configuration for the 727 portion of the refan program. Complete results of the 727-200 refan nacelle and airplane integration definition (NAID) studies of Phase I are given in reference 12 which is the second-submittal NAID for the 727-200/JT8D-109.

This section summarizes results of the 727-200 Phase I studies. It describes the refan nacelle configurations, airplane modifications required to install the nacelles, airplane performance, and noise reductions.

Refan Nacelle Configurations - The refan nacelle configurations studied in Phase I are shown in Figure 13. They consist of:

1) A minimum treatment nacelle (config. 1) which provides acoustic treatment of inlet wall and bullet, treated-wall engine fan ducts extending to the nozzle flange, a treated-wall nozzle, and a new target-type thrust reverser for the confluent fan and primary flows;

2) An intermediate treatment nacelle (config. 2) which provides treatment of inlet wall, bullet and ring; treated-wall fan ducts; treatment of nozzle wall, fan-primary divider and tail plug; and a new target-type reverser; and

3) A maximum treatment nacelle (config. 3) which is basically the intermediate treatment configuration with the addition of a second ring in the inlet and a fan-primary flow mixer instead of a divider in the nozzle.

Airplane Modifications - The airframe modifications required to install and integrate these nacelles on the 727-200 airplane are mostly in the aft-body section in the engine attachment region and include: modifications to the side-engine struts and engine mounts; modifications to the center-engine mounts, mount supports, and horizontal and vertical firewalls due to the larger engine; modifications to several aft-body frames and the pressure bulkhead due to larger S-duct; a new center-engine S-duct; a new center-engine inlet-to-vertical-fin-leading-edge fairing structure, and modifications to the tail skid, airstairs, etc.

Tests on the new center-engine S-duct in Phase I showed that the required airflow was achieved with acceptable pressure recovery. The new S-duct performance is comparable to that for the existing 727-200 center-engine duct, and the installation of vortex generators provided capability for substantial reduction of inlet pressure distortion.

Nacelle subsystems requiring some modifications include: nacelle vent and drain systems; fire detection and extinguishing systems; engine oil and fuel systems; CSD-oil cooler and generator cooling systems; engine controls and instrumentation systems; engine bleed air and starting systems; and engine and nacelle inlet anti-icing systems. These modifications mainly involve relocation or changes in minor components, bleed lines, hydraulic lines, electrical lines, control cables and devices, etc. caused by increased engine diameter and length.

Airplane Performance - Predicted airplane performance characteristics for the JT8D-9 baseline and refan nacelles are shown in Table 7. A change from baseline nacelle to refan nacelles is seen to have the following effects: Installed sea-level-static thrust and sea-level 100-knots takeoff thrust increased for all three refan nacelles, varying with degree of treatment. Installed maximum-cruise thrust and TSFC's were changed slightly and varied with treatment. Operational empty weights, reflecting combined changes in engine, nacelle and ballast weights, increased due to the larger refan engines and vary with treatment. The maximum brake release gross weight (MBRGW) increases shown for refan are limited by existing airplane fuel tank capacity. The practical growth MBRGW's are achievable using an existing airplane kit. Takeoff field length required decreased, and climb-out height above runway increased due to greater takeoff thrust for the refan engines. Airplane range with full-passenger-payload and baseline MBRGW decreased. However, full-passenger-payload range at the practical growth MBRGW's increased for all refan nacelles. DOC and retrofit costs, based on preliminary retrofit-economic study data of reference 7, show the increase in retrofit cost with nacelle treatment level. A comparison of range values at other payloads is shown in the payload-range curves of Figure 14.

Noise Reduction - The noise reductions in terms of EPNL values at the FAR-36 measuring points in changing from baseline to refan nacelles are seen in Table 7 to include: an 11-14 EPNdB decrease on approach, a 9-15 EPNdB decrease on takeoff without cutback, an 11-13 EPNdB decrease on takeoff with cutback, and a 9-15 EPNdB decrease on sideline.

The 95 EPNdB footprint area reductions from baseline given in the NAID (reference 12) for 3° approach/takeoff with cutback at MBRGW are: a 79% decrease in area for minimum treatment, an 83% decrease for intermediate treatment, and a 93% decrease for maximum treatment.

Additional comparisons of FAR-36 noise levels and noise level contours for the baseline and refan nacelles are shown later under "Noise Comparisons for JT8D-Powered Aircraft".

Nacelle Selection - Trade studies are continuing on the 727 nacelle selection. The mixer nozzle included in the maximum treatment nacelle requires technology still in development stages and thus makes this configuration undesirable for further consideration under this program. Thus, the acoustic and airplane performance values given for this configuration should be regarded as design goals only. Only the intermediate and minimum treatment nacelles are still being actively pursued in the trade studies.

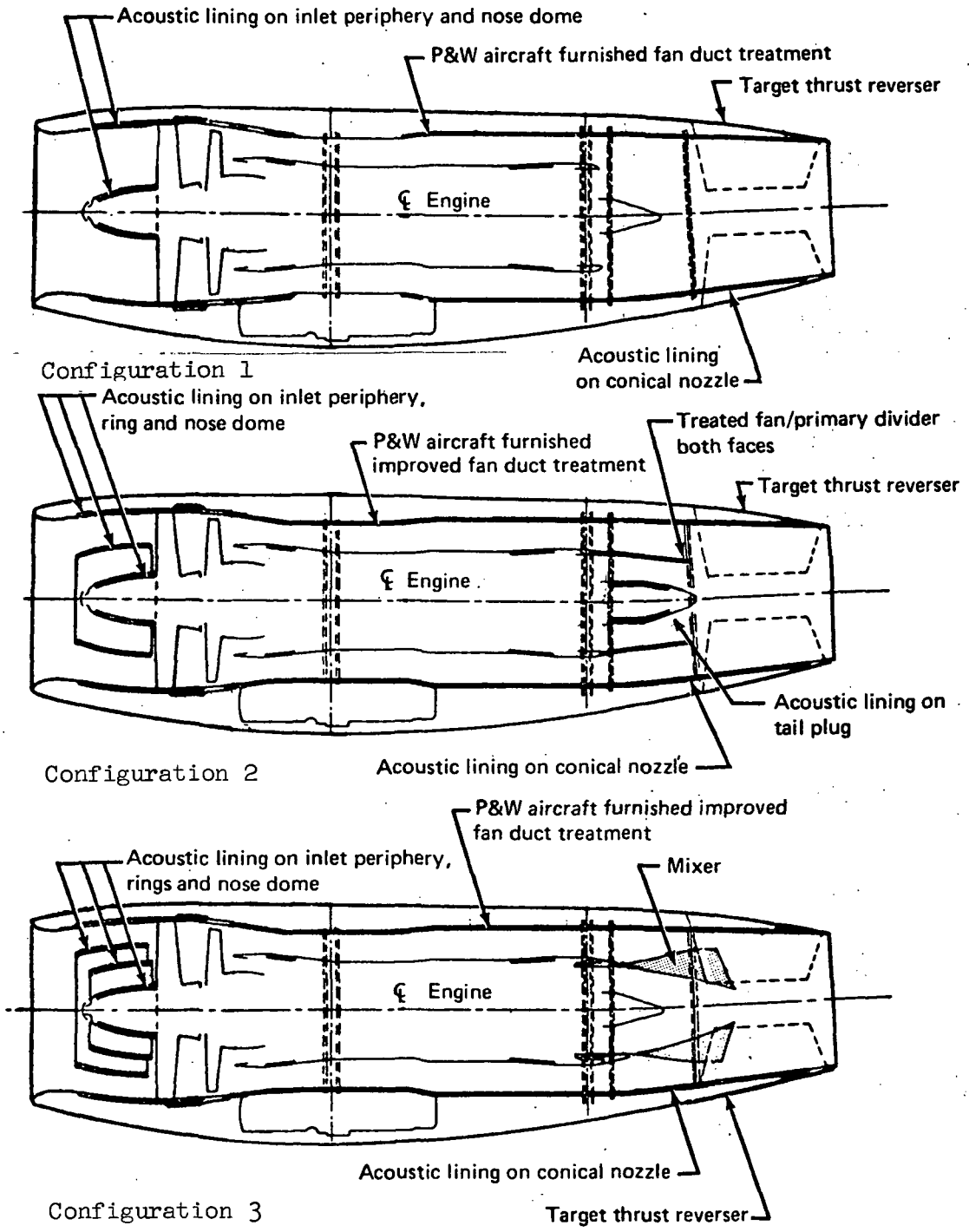


FIGURE 13. - 727/JT8D-109 REFAN NACELLE CONFIGURATIONS

TABLE 7 - COMPARISON OF 727-200 AIRPLANE PERFORMANCE, COST & NOISE CHARACTERISTICS FOR REFAN NACELLES (TREATMENTS)

| AIRPLANE PERFORMANCE/CHARACTERISTICS | BASELINE | REFAN NACELLES (treatments) Minimum | * | Intermediate | * | Maximum | * |
|---|---|---|---|---|---|---|---|
| **Installed Takeoff:** | | | | | | | |
| SLS Thrust, lbs. (Std. day) | 14,100 | 15,450 | 9.6 | 15,050 | 6.7 | 14,950 | 6.0 |
| SLTO Thrust, lbs. (100-kts) | 12,700 | 13,700 | 7.9 | 13,350 | 5.1 | 13,250 | 4.3 |
| **Installed Cruise:** | | | | | | | |
| Max. Cruise Thrust, lbs. (alt=30,000 M = 0.84) | 4,325 | 4,420 | 2.2 | 4,300 | -0.6 | 4,330 | 0.1 |
| Max. Cruise TSFC, lbs/hr/lb | 0.812 | 0.802 | -1.2 | 0.816 | 0.5 | 0.807 | -0.6 |
| Typical-Cruise-Thrust (4000-lbs) TSFC | 0.812 | 0.807 | -0.6 | 0.820 | 1.0 | 0.814 | 0.2 |
| **Weights:** | | | | | | | |
| Operational Empty (OEW), lbs. | 99,000 | 102,655 | 3.7 | 103,365 | 4.4 | 103,500 | 4.5 |
| Max. Brake Release Gross (MBRGW), lbs. | 172,500 | 181,990[1] | 5.5 | 182,500[1] | 5.8 | 182,500[1] | 5.8 |
| **Takeoff & Climbout: @ MBRGW** | | | | | | | |
| Takeoff Field Length (TOFL), ft. | 8,370 | 7,120 | -14.9 | 7,330 | -12.4 | 7,380 | -11.8 |
| Height Above Runway @ 3.5 n.mi. | 1,720 | 1,920 | 11.6 | 1,840 | 7.0 | 1,760 | 2.3 |
| **Range:** | | | | | | | |
| Full-Passenger-Payload Range[2], n.mi. | 1,355 | 1,135 | -16.2 | 1,065 | -21.4 | 1,080 | -20.3 |
| Full-Passenger-Payload Range[3], n.mi. | | 1,540 | 13.7 | 1,480 | 9.2 | 1,495 | 10.3 |
| **Costs:** | | | | | | | |
| DOC, $/St.mi. | 1.604 | 1.632 | 1.77 | 1.642 | 2.35 | 1.635 | 1.94 |
| Retrofit cost, million $'s/airplane | | 1.634 | | 1.700 | | 1.740 | |

Notes: [1] Practical growth limit MBRGW achievable with existing kit and limited by existing fuel capacity of airplane.
[2] At baseline maximum brake release gross weight (MBRGW).
[3] At practical growth limit MBRGW.

*Percent change from baseline

| NOISE REDUCTION (FAR-36) | FAR-36 limit | BASELINE | REFAN NACELLES (treatments) Minimum | ** | Intermediate | ** | Maximum | ** |
|---|---|---|---|---|---|---|---|---|
| Approach, EPNdB | 104 | 108 | 97 | -11 | 95 | -13 | 94 | -14 |
| Takeoff w/o Cutback | 99 | 107 | 98 | - 9 | 97 | -10 | 92 | -15 |
| Takeoff with Cutback | 99 | 100 | 89 | -11 | 89 | -11 | 87 | -13 |
| Sideline | 104 | 100 | 91 | - 9 | 90 | -10 | 85 | -15 |

** Δ EPNdB from baseline

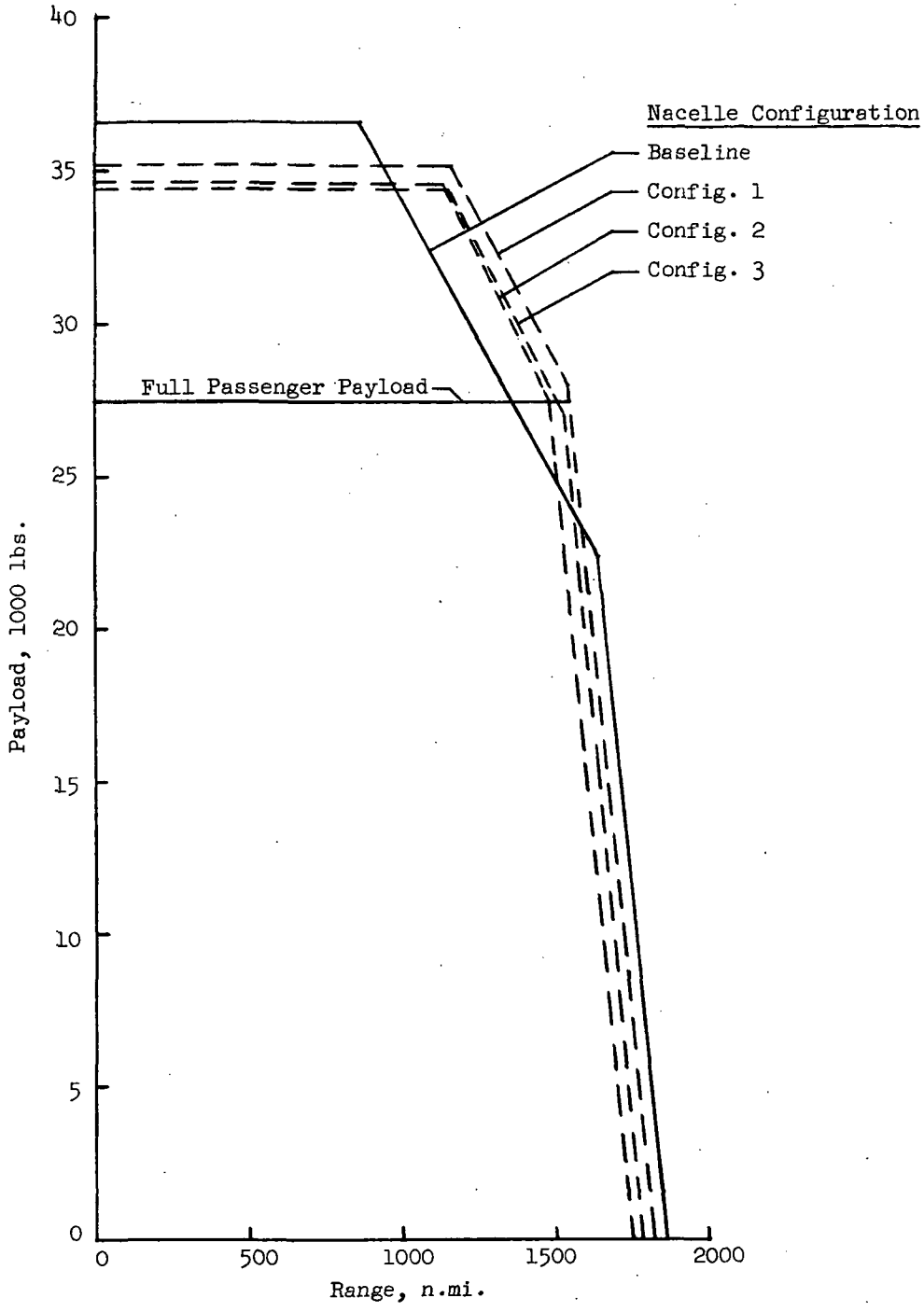


FIGURE 14.- COMPARISON OF 727-200 PAYLOAD-RANGE CURVES FOR REFAN NACELLES

## 737 Airplane

The 737-200 airplane with JT8D-9 engines was selected as the baseline configuration for the 737 portion of the refan program. Complete results of the 737-200 refan nacelle and airplane integration definition studies of Phase I are given in reference 13 which is the preliminary NAID for the 737-200/JT8D-9.

This section summarizes results of the 737-200 Phase I studies. It describes the refan nacelle configurations, airplane modifications required to install the nacelles, airplane performance, and noise reductions.

Refan Nacelle Configurations - The refan nacelle configurations studied in Phase I are shown in Figure 15. They consist of:

1) A minimum treatment nacelle (config. 1) which provides acoustic treatment of inlet wall and bullet, treated-wall engine fan ducts, a treated-wall nozzle, and a modified current target-type thrust reverser for the confluent fan and primary flow;

2) An intermediate treatment nacelle (config. 2) which provides treatment of inlet wall, bullet and ring; treated-wall fan ducts with additional surface treatment; treatment of nozzle wall, fan-primary divider, and tail plug; and a target-type thrust reverser; and

3) A maximum treatment nacelle (config. 3) which is basically the intermediate treatment with addition of a second ring in the inlet and a fan-primary flow mixer instead of a divider.

Airplane Modifications - The airplane modifications required to install and integrate these refan nacelles on the 737-200 airplane consist of airframe structure modifications and changes to the airframe systems and subsystems.

The airframe structure modifications include: a new main landing gear which is 12-inches longer to retain acceptable ground clearances for the larger diameter refan nacelles; a new landing gear support beam and reinforced forward trunnion support fitting required for increased loads on the extended main landing gear; changes in wing structure including a general reinforcing of spars and supports in the area of the main landing gear, trimming and recontouring of flaps to match the increased nacelle diameter, and some new wing/nacelle fairings; also addition of one step to the aft stairs and a longer aft evacuation slide resulting from the landing gear extension.

Some airframe systems and subsystems requiring minor modifications include: air conditioning, instrumentation, hydraulics and controls. These changes mainly involve relocation of minor components, ducting, electrical lines, hydraulic lines, control cables, etc. due to increased engine diameter.

Airplane Performance - Predicted airplane performance characteristics for the JT8D-9 baseline nacelle and three refan nacelles are shown in Table 8. A change from baseline nacelle to refan nacelles is seen to have the following effects: Installed sea-level-static thrust and sea-level 100-knots takeoff thrust increased for all three refan nacelles, varying with degree of treatment. Installed maximum-cruise thrust and TSFC values showed small improvements, varying with treatment. Operational empty weights increased due to the larger refan engines and varies with treatment. Maximum brake release gross weight (MBRGW) increases shown for the refans represent the practical growth MBRGW's achievable using an existing airplane kit. Takeoff field length required decreased and height above runway increased due to increased takeoff thrust for the refan engines. Airplane range with full-passenger-payload at baseline MBRGW decreased, but full-passenger-payload at the practical growth MBRGW increased for the refan nacelles, varying with degree of treatment. DOC and retrofit costs, based on preliminary retrofit-economic study data of reference 7, show an increase with refan treatment. A comparison of range values at other payloads is shown in Figure 16.

Noise Reduction - The noise reductions in terms of EPNL values at the FAR-36 measuring points in changing from baseline to refan nacelles are seen in Table 8 to include: a 9-14 EPNdB decrease on approach, an 8-14 EPNdB decrease on takeoff without cutback, a 10-12 EPNdB decrease on takeoff with cutback, and a 9-15 EPNdB decrease on sideline.

The 95 EPNdB footprint area reductions from baseline given in the NAID (reference 13) for 3° approach/takeoff without cutback at MBRGW are: an 82% decrease in area for minimum treatment, an 84% decrease for intermediate treatment, and a 91% decrease for maximum treatment.

Additional comparisons of FAR-36 noise levels and noise level contours for the baseline and refan nacelles are shown later under "Noise Comparisons for JT8D-Powered Aircraft".

Nacelle Selection - As was the case for the 727, the maximum treatment nacelle for the 737 is not a practical refan option because of the unproven nature of the mixer nozzle. The intermediate and minimum treatment nacelles are considered to be more suitable configurations. Further trade studies would be required to make a final selection.

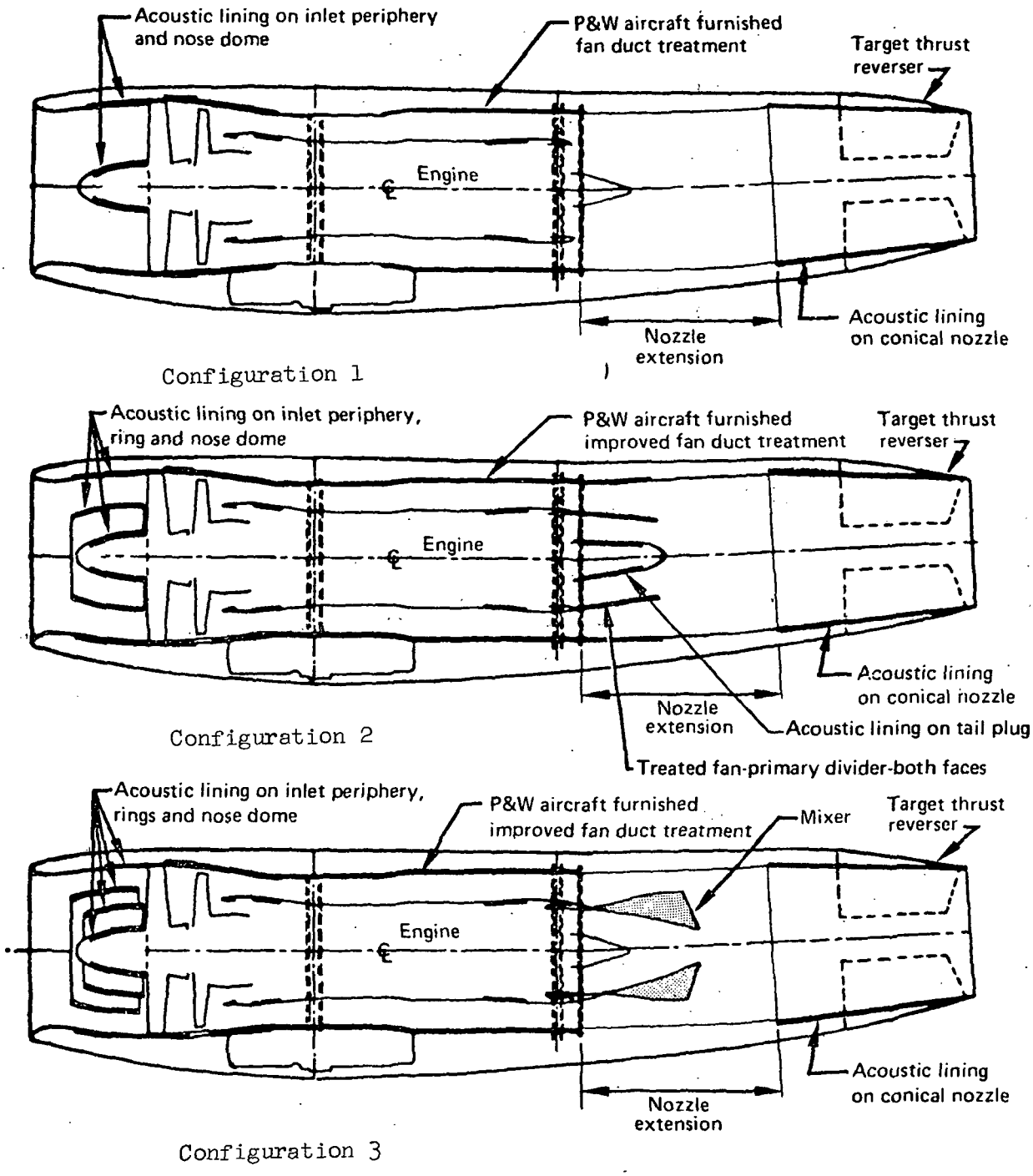


FIGURE 15. - 737/JT8D-109 REFAN NACELLE CONFIGURATIONS

TABLE 8 - COMPARISON OF 737-200 AIRPLANE PERFORMANCE, COST & NOISE CHARACTERISTICS FOR REFAN NACELLES (TREATMENTS)

| AIRPLANE PERFORMANCE/CHARACTERISTICS | BASELINE | REFAN NACELLES (treatments) Minimum | * | Intermediate | * | Maximum | * |
|---|---|---|---|---|---|---|---|
| **Installed Takeoff:** | | | | | | | |
| SLS Thrust, lbs. (84° day) | 14,350 | 16,150 | 12.5 | 15,700 | 9.4 | 15,800 | 10.1 |
| SLTO Thrust, lbs. (100-kts) | 13,070 | 14,400 | 10.2 | 14,050 | 7.5 | 14,200 | 8.6 |
| **Installed Cruise:** | | | | | | | |
| Max. Cruise Thrust, lbs. (alt=25,000 M = 0.78) | 5,030 | 5,230 | 4.0 | 5,100 | 1.4 | 5,240 | 4.2 |
| Max. Cruise TSFC, lbs/hr/lb | 0.810 | 0.782 | -3.5 | 0.796 | -1.7 | 0.772 | -4.7 |
| Typical-Cruise-Thrust (4200-lbs.) TSFC | 0.810 | 0.804 | -0.7 | 0.820 | 1.2 | 0.796 | -1.7 |
| **Weights:** | | | | | | | |
| Operational Empty (OEW), lbs. | 59,700 | 62,180 | 4.2 | 62,480 | 4.7 | 62,660 | 5.0 |
| Max. Brake Release Gross (MBRGW), lbs. | 103,500 | 109,000[1] | 5.3 | 109,000[1] | 5.3 | 109,000[1] | 5.3 |
| **Takeoff & Climbout: @ MBRGW** | | | | | | | |
| Takeoff Field Length (TOFL), ft. | 6,480 | 5,200 | -19.8 | 5,720 | -11.7 | 5,500 | -15.1 |
| Height Above Runway @ 3.5 n.mi. | 2,400 | 2,700 | 12.5 | 2,580 | 7.5 | 2,630 | 9.6 |
| **Range:** | | | | | | | |
| Full-Passenger-Payload Range,[2] n.mi. | 745 | 535 | -28.2 | 490 | -34.2 | 510 | -31.5 |
| Full-Passenger-Payload Range,[3] n.mi. | | 900 | 20.8 | 840 | 12.8 | 870 | 16.8 |
| **Costs:** | | | | | | | |
| DOC, $/st.mi. | 1.456 | 1.477 | 1.47 | 1.494 | 2.58 | 1.489 | 2.27 |
| Retrofit cost, million $'s/airplane | | 1.412 | | 1.452 | | 1.526 | |

Notes: [1] Practical growth limit MBRGW achievable with existing kit.
[2] At baseline maximum brake release gross weight (MBRGW).
[3] At practical growth limit MBRGW.

*Percent change from baseline

| NOISE REDUCTION (FAR-36) | FAR-36 limit | BASELINE | REFAN NACELLES (treatments) Minimum | ** | Intermediate | ** | Maximum | ** |
|---|---|---|---|---|---|---|---|---|
| Approach, EPNdB | 103 | 111 | 102 | - 9 | 100 | -11 | 97 | -14 |
| Takeoff w/o Cutback | 95 | 100 | 91 | - 9 | 92 | - 8 | 86 | -14 |
| Takeoff with Cutback | 95 | 97 | 86 | -11 | 87 | -10 | 85 | -12 |
| Sideline | 103 | 101 | 92 | - 9 | 91 | -10 | 86 | -15 |

** Δ EPNdB from baseline

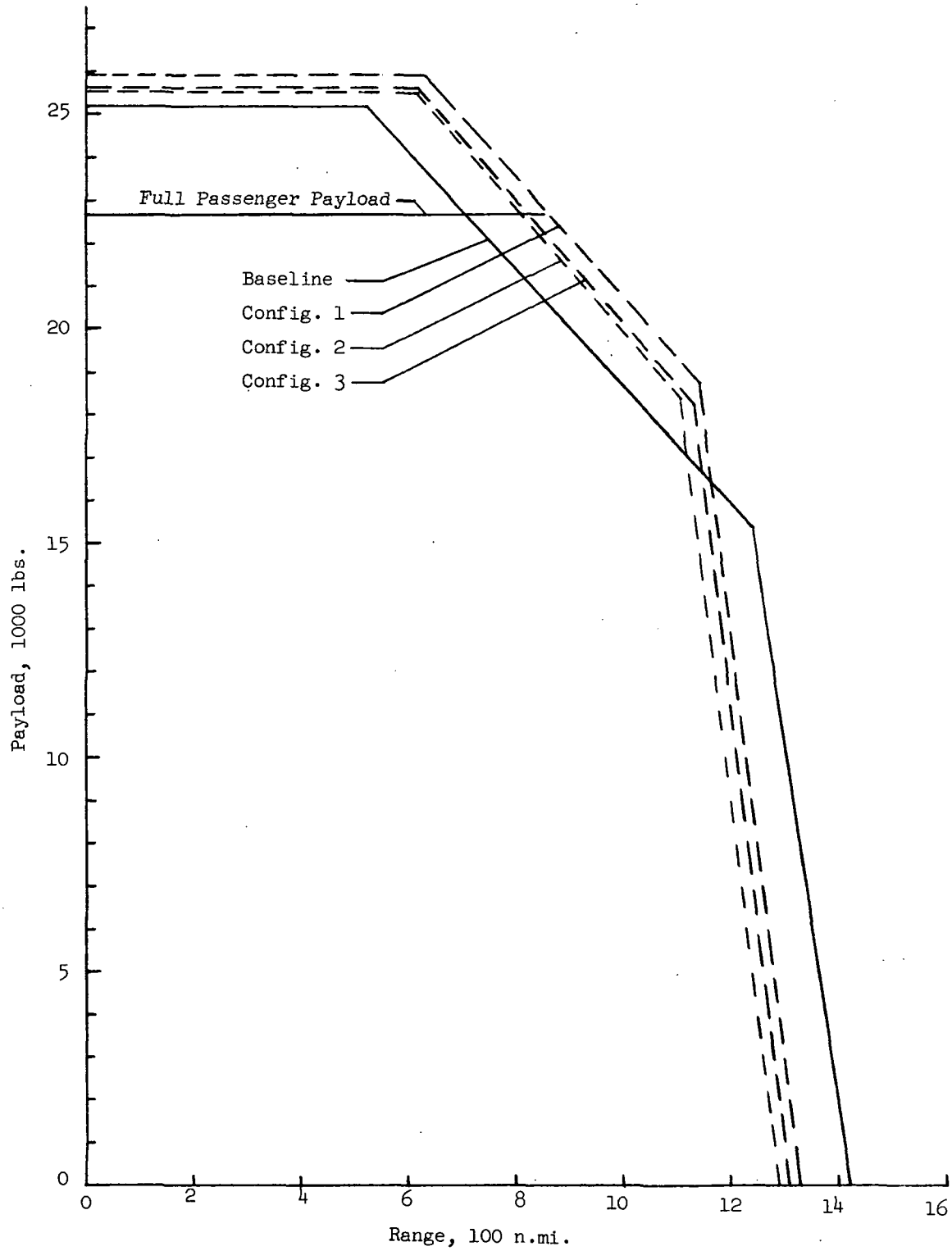


FIGURE 16.- COMPARISON OF 737-200 PAYLOAD-RANGE CURVES FOR REFAN NACELLES

DC-9 Airplane

The DC-9-32 airplane with JT8D-9 engines was selected as the baseline configuration for the DC-9 portion of the refan program. Complete results of the DC-9-32 refan nacelle and airplane integration definition (NAID) studies of early Phase I are given in reference 14 which is the preliminary NAID for the DC-9-32/JT8D-109.

This section summarizes results of the DC-9-32 Phase I studies. It describes the refan nacelle configurations, airplane modifications required to install the nacelles, airplane performance, and noise reductions.

Refan Nacelle Configurations - The refan nacelle configurations studied in early Phase I are shown in Figure 17. They consist of:

1) A minimum treatment nacelle which provides a treated-wall and treated-bullet inlet; treated-wall engine fan ducts extending to the nozzle flange; a treated-wall nozzle; and a target-type thrust reverser for the confluent fan and primary flows;

2) An intermediate treatment nacelle which provides a treated-wall and one-ring inlet; treated-wall fan case ducts; a treated-wall nozzle with treated-wall centerbody; and a modified target-type reverser; and

3) A maximum treatment nacelle which provides acoustic treatment of the inlet wall, bullet and ring; treated-wall fan ducts; treatment of nozzle wall, centerbody and ring; and a target-type reverser.

Airplane Modifications - The airplane modifications required to install and integrate these refan nacelles on the DC-9-32 airplane basically consist of airframe modifications and nacelle subsystem changes.

The airframe modifications will include: new shorter pylons including relocation of pylon firewall to the fuselage wall; new engine mounts and vibration isolators due to increased engine weight; some reinforcement of fuselage frames and skin adjacent to pylons for increased loads and to provide a firewall; and some reinforcement of keel caps near the landing gear wells.

Nacelle subsystems that require some modification include: nacelle ventilation and drain systems, fire detection and extinguishing systems, engine oil and fuel systems, CSD/oil cooler and generator cooling systems, engine control and instrumentation systems, engine bleed air and starting systems, and engine and nacelle inlet anti-icing systems. These changes mainly involve relocation or changes in minor components, bleed lines, hydraulic lines, electrical lines, control cable and devices, etc. caused by increased engine diameter and length.

Airplane Performance - Predicted airplane performance characteristics for the JT8D-9 baseline nacelle and the three refan nacelles are shown in Table 9. A change from baseline nacelle to the refan nacelles is seen to have the following effects: Installed sea-level-static thrust and sea-level M=0.27 takeoff thrust generally increased for the three refan nacelles, varying with the degree of treatment. Installed maximum cruise thrust generally decreased and TSFC's increased, varying with treatment. Operational empty weight (OEW), which reflects the combined changes in engine, nacelle and ballast weights, increased due to the larger refan engines and varies with treatment. Maximum brake release gross weight (MBRGW) was held constant at the baseline value. Takeoff field length required decreased and height above runway generally increased, both varying with treatment. Airplane range with full-passenger-payload of 20,000-lbs. and range with typical-mission-payload of 15,000-lbs. both decreased, varying with treatment; the latter range decreased 1.4% for minimum treatment. DOC costs, based on data in reference 9, and retrofit costs, based on data in reference 10, both increase with increase in nacelle treatment level. A comparison of range values at other paylcads is shown in the payload-range curves of Figure 18.

Noise Reduction - The predicted noise reductions in terms of EPNL values at the FAR-36 measuring points in changing from baseline nacelle to refan nacelles are seen in Table 9 to include: a 6-11 EPNdB decrease on approach, an 11-12 EPNdB decrease on takeoff without cutback, a 9-10 EPNdB decrease on takeoff with cutback, and an 8-10 EPNdB decrease on sideline.

The 90 EPNdB footprint area reductions from baseline given in the NAID (reference 14) for 3° approach/takeoff without cutback at MBRGW are: a 79% decrease in area for minimum treatment, an 83% decrease for intermediate treatment, and an 84% decrease for maximum treatment.

The relatively small increase in area reduction for the intermediate and maximum treatment nacelles over that obtainable with minimum treatment does not appear to justify the increased retrofit costs, maintenance costs, and performance losses for the intermediate and maximum treatments.

As a result of these studies, two additional refan nacelle treatments were evaluated late in Phase I which were generally designed to provide noise reductions greater than the intermediate treatment with performance and economic penalties less than the intermediate treatment through elimination of any treated-ring or treated-bullet in the inlet as well as any treated-centerbody or treated-ring in the nozzle; instead inlet and nozzle lengths were increased for additional treatment surface area.

Final-Phase I Refan Nacelle Configurations - Complete results of the NAID studies for these two additional refan nacelle configurations (minimum and maximum treatments) are given in reference 15 which is the second-submittal (or final Phase I) NAID for the DC-9-32/JT8D-109. These two final-Phase I configurations are compared with the baseline nacelle in Figure 19 and include:

1) A minimum treatment nacelle which provides a treated-wall 63-inch length inlet, treated-wall engine fan ducts, a treated-wall 73-inch length nozzle, and a target-type thrust reverser. For comparison, the inlet and nozzle lengths on the early-Phase I intermediate treatment were 39-inch and 75-inch, respectively, versus 63-inch and 73-inch for the final Phase I minimum treatment; and

2) A maximum treatment nacelle which provides a treated-wall 75-inch length inlet, treated-wall engine fan ducts, a treated-wall 110-inch length nozzle, and a target-type thrust reverser.

Airplane Modifications - The airplane modifications required to install and to integrate these refan nacelles on the DC-9-32 airplane are essentially those described for the early-Phase I refan nacelles.

Airplane Performance - Predicted airplane performance and characteristics for the JT8D-9 baseline nacelle and the two final-Phase I refan nacelles are shown in Table 10. A change from baseline nacelle to the refan nacelles is seen to have the following effects: Installed sea-level-static thrust and sea-level M=0.27 takeoff thrust increased for both refan nacelles, varying slightly with treatment. Installed maximum cruise thrust and typical-cruise thrust TSFC changes were minor. Operational empty weight increased due to the larger refan engines and nacelles. Maximum brake release gross weight was held constant at the baseline value. Takeoff field length decreased and height above runway increased due to increase in takeoff thrust for the refan engines. Airplane range with full-passenger-payload of 20,000-lbs. and range with typical-mission-payload of 15,000-lbs. both decreased, varying with treatment. DOC costs, based on data in reference 9, and retrofit costs, based on data in reference 10, both increase with increase in nacelle treatment level.

Noise Reduction - The predicted noise reductions in terms of EPNL values at the FAR-36 measuring points in changing from baseline nacelle to refan nacelles are seen in Table 10 to include: a 7-8 EPNdB decrease on approach, a 14 EPNdB decrease on takeoff without cutback, a 12 EPNdB decrease on takeoff with cutback, and an 11 EPNdB decrease on sideline.

The 95 EPNdB footprint area reductions from baseline given in the NAID (reference 15) for 3° approach/takeoff without cutback at MBRGW are: an 85% area decrease for minimum treatment and an 86% decrease for maximum treatment.

Additional comparisons of FAR-36 noise levels and noise level contours for the baseline and refan nacelles are shown under "Noise Comparisons for JT8D-Powered Aircraft" in the section that follows.

Nacelle Selection - The minimum and maximum treatment nacelles studied late in Phase I showed improvements in both acoustic and airplane performance over the minimum (with treated-bullet) and intermediate (with treated inlet ring and treated-nozzle centerbody) configurations, respectively, studied in early-Phase I. However, the need for an inlet splitter ring and/or additional tailpipe acoustic treatment has not been fully evaluated as yet. Further trade studies are continuing and will result in a refan nacelle configuration selection before commitment is made for the DC-9 flight test configuration.

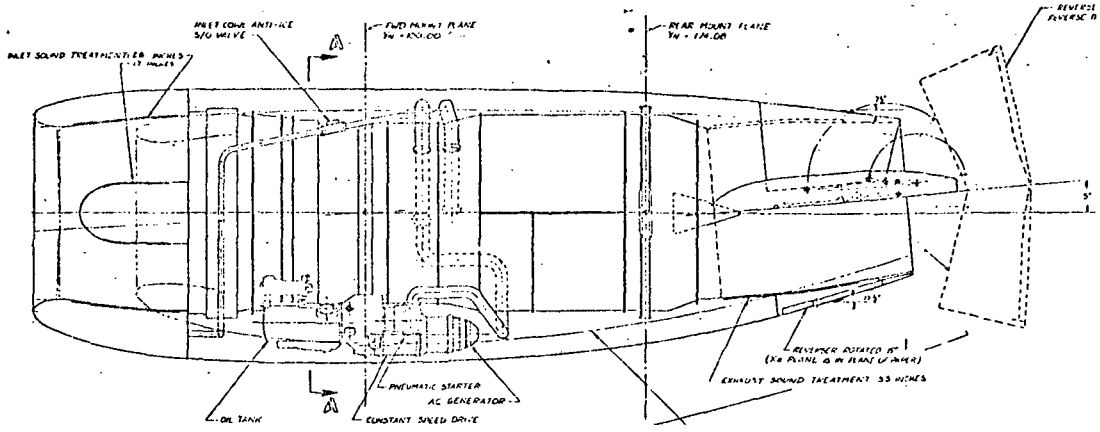


Minimum Treatment

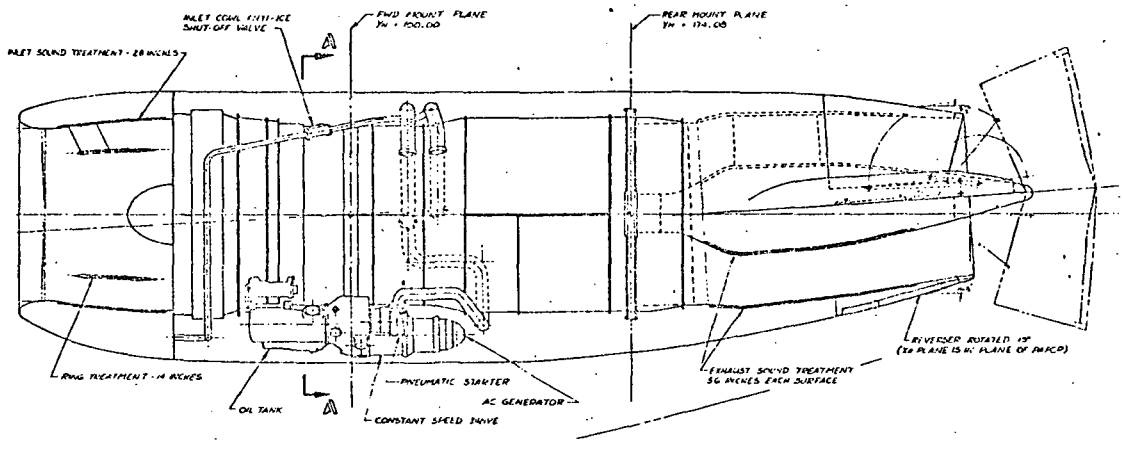


Intermediate Treatment

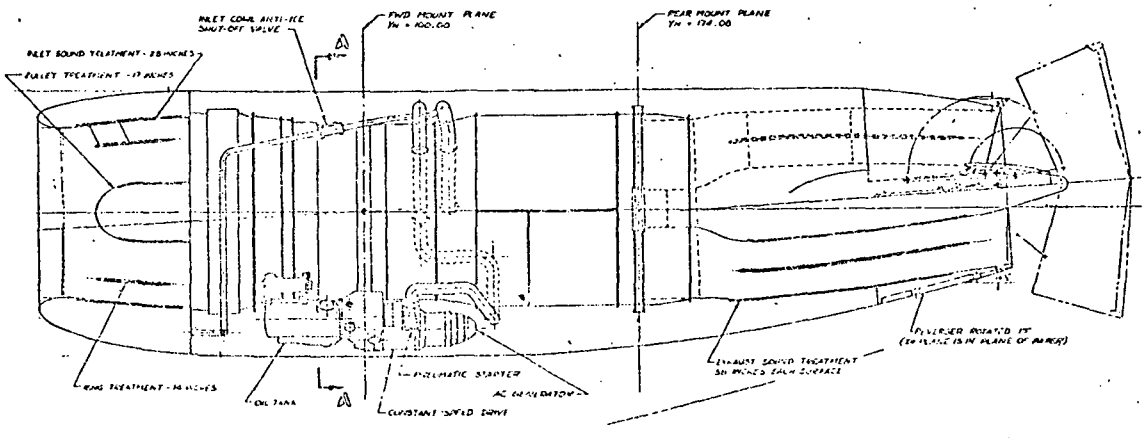


Maximum Treatment

FIGURE 17. - DC-9/JT8D-109 REFAN NACELLE CONFIGURATIONS (EARLY PHASE I)

TABLE 9 - COMPARISON OF DC-9-32 AIRPLANE PERFORMANCE, COST & NOISE CHARACTERISTICS FOR REFAN NACELLES (EARLY PHASE I)

| AIRPLANE PERFORMANCE/CHARACTERISTICS | BASELINE | REFAN NACELLES (treatments) Minimum | * | Intermediate | * | Maximum | * |
|---|---|---|---|---|---|---|---|
| **Installed Takeoff:** | | | | | | | |
| SLS Thrust, lbs. (Std. day) | 14,250 | 16,200 | 13.7 | 15,600 | 9.5 | 15,200 | 6.7 |
| SLTO Thrust, lbs. (M = 0.27) | 12,200 | 13,025 | 6.8 | 12,350 | 1.2 | 11,800 | -3.3 |
| **Installed Cruise:** | | | | | | | |
| Max. Cruise Thrust, lbs. (alt=30,000 M = 0.80) | 4,115 | 4,129 | 0.3 | 3,924 | -4.6 | 3,770 | -8.4 |
| Max. Cruise TSFC, lbs/hr/lb | 0.858 | 0.843 | -1.7 | 0.886 | 3.3 | 0.922 | 7.5 |
| Typical-Cruise-Thrust (3600-lbs.) TSFC | 0.858 | 0.857 | -0.1 | 0.896 | 4.4 | 0.928 | 8.2 |
| **Weights:** | | | | | | | |
| Operational Empty (OEW), lbs. | 59,076 | 61,013 | 3.3 | 62,219 | 5.3 | 63,339 | 7.2 |
| Max. Brake Release Gross (MBRGW), lbs. | 108,000 | 108,000 | 0 | 108,000 | 0 | 108,000 | 0 |
| **Takeoff & Climbout:** @ MBRGW | | | | | | | |
| Takeoff Field Length (TOFL), ft. | 7,000 | 5,850 | -16.4 | 6,100 | -12.9 | 6,900 | -1.4 |
| Height Above Runway @ 3.5 n.mi. | 2,100 | 2,500 | 19.0 | 2,300 | 9.5 | 2,050 | -2.4 |
| **Range:** | | | | | | | |
| Full-Passenger-Payload[1] Range, n.mi. | 1,750 | 1,600 | -8.6 | 1,400 | -20.0 | 1,250 | -28.6 |
| Typical-Mission-Payload[2] Range, n.mi. | 1,825 | 1,800 | -1.4 | 1,690 | -7.4 | 1,600 | -12.3 |
| **Costs:** | | | | | | | |
| DOC, $/st.mi. | 0.964 | 0.988 | 2.52 | 0.998 | 3.47 | 1.009 | 4.65 |
| Retrofit cost, million $'s/airplane | | 0.957 | | 0.979 | | 1.036 | |

*Percent change from baseline

Notes: [1] Full-passenger-payload of 20,000-lbs.
[2] Typical-mission-payload of 15,000-lbs.

| NOISE REDUCTION (FAR-36) | FAR-36 limit | BASELINE | REFAN NACELLES (treatments) Minimum | ** | Intermediate | ** | Maximum | ** |
|---|---|---|---|---|---|---|---|---|
| Approach, EPNdB | 103 | 108 | 102 | - 6 | 100 | - 8 | 97 | -11 |
| Takeoff w/o Cutback | 96 | 103 | 91 | -12 | 91 | -12 | 92 | -11 |
| Takeoff with Cutback | 96 | 97 | 87 | -10 | 87 | -10 | 88 | - 9 |
| Sideline | 103 | 102 | 94 | - 8 | 93 | - 9 | 92 | -10 |

** Δ EPNdB from baseline

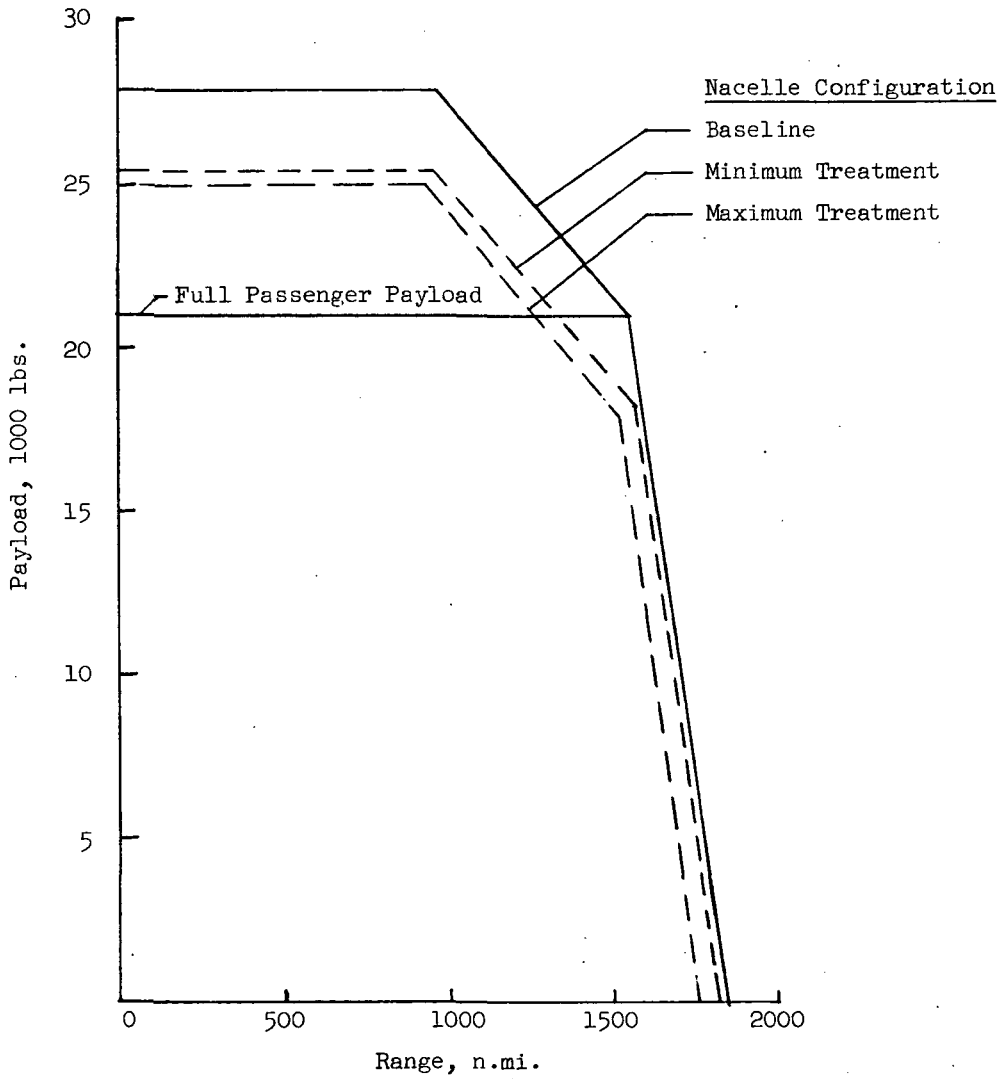


FIGURE 18.- COMPARISON OF DC-9-32 PAYLOAD-RANGE CURVES FOR REFAN NACELLES (EARLY PHASE I)

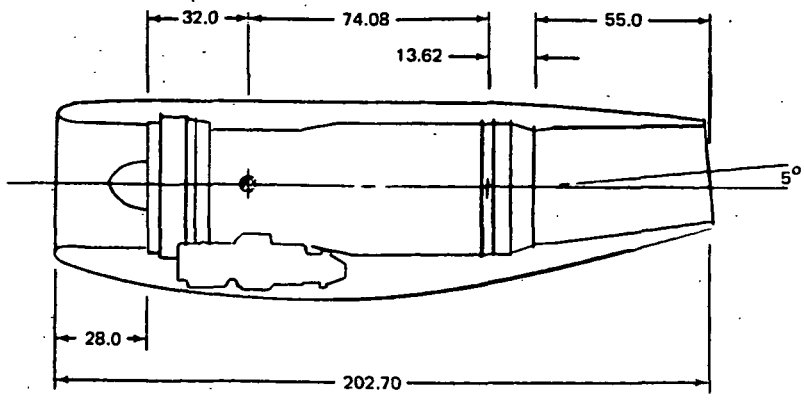


Existing DC-9 Nacelle

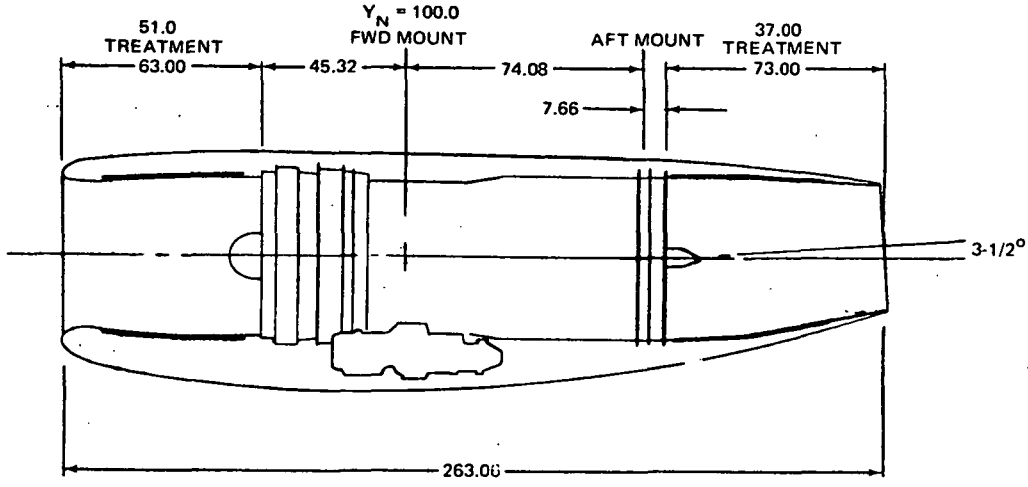


Minimum Treatment

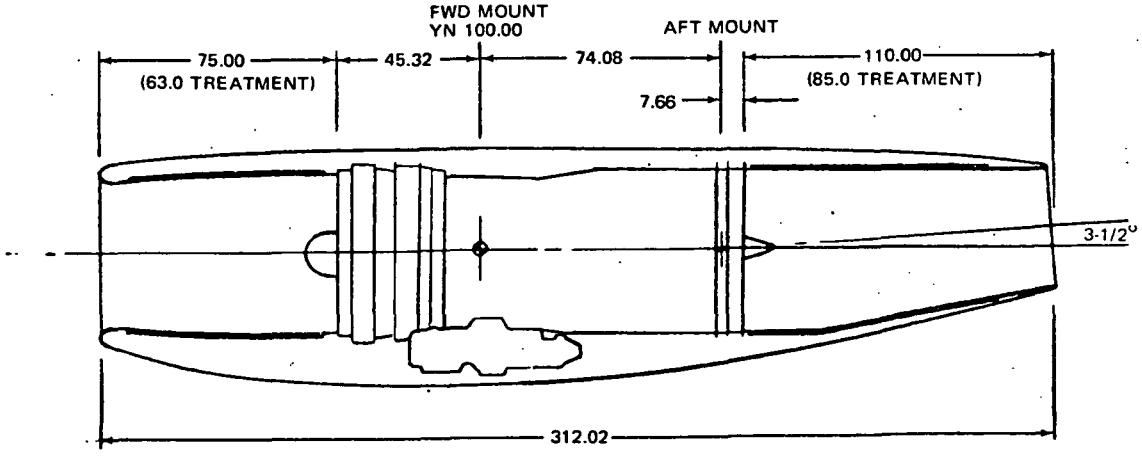


Maximum Treatment

FIGURE 19. - DC-9/JT8D-109 REFAN NACELLE CONFIGURATIONS (LATE PHASE I)

TABLE 10 - COMPARISON OF DC-9-32 AIRPLANE PERFORMANCE, COST & NOISE CHARACTERISTICS FOR REFAN NACELLES (LATE PHASE I)

| AIRPLANE PERFORMANCE/CHARACTERISTICS | BASELINE | REFAN NACELLES (treatments) Minimum | | Intermediate | | Maximum | |
|---|---|---|---|---|---|---|---|
| | | | * | | | | * |
| **Installed Takeoff:** | | | | | | | |
| SLS Thrust, lbs. (Std. day) | 14,250 | 16,050 | 12.6 | | | 16,000 | 12.3 |
| SLTO Thrust, lbs. (M = 0.27) | 12,200 | 12,775 | 4.7 | | | 12,700 | 4.1 |
| **Installed Cruise:** | | | | | | | |
| Max. Cruise Thrust, lbs. (alt=30,000 M = 0.78) | 4,115 | 4,150 | 0.9 | | | 4,100 | -0.4 |
| Max. Cruise TSFC, lbs/hr/lb | 0.858 | 0.839 | -2.2 | | | 0.850 | -0.9 |
| Typical-Cruise-Thrust (3600-lbs.) TSFC | 0.858 | 0.852 | -0.7 | | | 0.861 | 0.3 |
| **Weights:** | | | | | | | |
| Operational Empty (OEW), lbs. | 59,076 | 61,558 | 4.2 | | | 62,000 | 4.9 |
| Max. Brake Release Gross (MBRGW), lbs. | 108,000 | 108,000 | 0 | | | 108,000 | 0 |
| **Takeoff & Climbout:** @ MBRGW) | | | | | | | |
| Takeoff Field Length (TOFL), ft. | 7,000 | 5,450 | -22.1 | | | 5,550 | -20.7 |
| Height Above Runway @ 3.5 n.mi. | 2,100 | 2,400 | 14.3 | | | 2,450 | 16.7 |
| **Range:** | | | | | | | |
| Full-Passenger-Payload[1] Range, n.mi. | 1,750 | 1,560 | -10.8 | | | 1,460 | -16.6 |
| Typical-Mission-Payload[2] Range, n.mi. | 1,825 | 1,800 | -1.4 | | | 1,750 | -4.1 |
| **Costs:** | | | | | | | |
| DOC, $/st.mi. | 0.964 | 0.988 | 2.52 | | | 0.989 | 2.62 |
| Retrofit cost, million $'s/airplane | | 0.957 | | | | 0.963 | |

* Percent change from baseline

Notes: 1 Full-passenger payload of 20,000-lbs.
2 Typical-mission-payload of 15,000-lbs.

| NOISE REDUCTION (FAR-36) | FAR-36 limit | BASELINE | REFAN NACELLES (treatments) Minimum | | Intermediate | | Maximum | |
|---|---|---|---|---|---|---|---|---|
| Approach, EPNdB | 103 | 108 | 101 | -7** | | | 100 | -8** |
| Takeoff w/o Cutback | 96 | 103 | 89 | -14 | | | 89 | -14 |
| Takeoff with Cutback | 96 | 97 | 85 | -12 | | | 85 | -12 |
| Sideline | 103 | 102 | 91 | -11 | | | 91 | -11 |

** Δ EPNdB from baseline

## Noise Comparisons for JT8D-Powered Aircraft

FAR-36 Levels - Tabular listings of noise levels for JT8D-powered aircraft are given in Table 11. As was done previously for the JT3D-powered aircraft, noise level comparisons are made between the current (baseline) aircraft and various refan options. The viable refan options for the 727, namely minimum and intermediate treatment, reduce noise levels 5-7 EPNdB below FAR-36 on approach, about 9 EPNdB at takeoff, and about 14-15 EPNdB on sideline. Improvements for the 2-engine aircraft (737 and DC-9) are somewhat less than for the 3-engine 727; however, they are still substantial with noise levels well below the FAR-36 standard.

Bar-chart visualization of these FAR-36 measurement point values is shown in Figure 20 for the approach and takeoff points. This shows the potential benefits of refan depending on the nacelle treatment level.

Footprints - A better comparison of noise reduction benefits is obtained by comparing noise exposure contours (footprints) rather than FAR-36 point measurements. 95 EPNdB single-event footprints are shown in Figure 21 for the intermediate-treatment refanned and current (baseline) 727 aircraft at maximum takeoff gross weight. The refan nacelle with an intermediate level of acoustic treatment provides significant area reductions at both approach and takeoff as also noted by the table in the figure. Refan treatment reduces the baseline footprint by 82%.

Similar footprint comparisons follow in Figures 22 and 23 for the DC-9 and 737 for levels of refan acoustic treatment which appears most likely at this time.

The footprint of a wide-body DC-10 is shown in Figure 24 and is compared to a 727 with intermediate acoustic treatment. Thus refan technology applied to the 727 can result in an airplane comparing favorably with the DC-10 from a noise exposure viewpoint.

Noise Level Uncertainties - The previous predictions of noise level and aircraft performance are the best engineering estimates available from Phase I studies. Future studies, testing, and development in Phase II will naturally mature these estimates until a final product is delivered.

An area of uncertainty exists with respect to prediction of the low frequency core noise component of refanned engine noise. Current predictions are based on extrapolations from indirect measurements on existing engines. Takeoff with power cutback has been identified as the flight condition where low frequency core noise level is highest relative to other engine noise source levels. A core noise contribution of 1 to 2 EPNdB to the total JT8D refanned engine noise is estimated for power cutback. Lesser or no contribution is expected at approach or takeoff.

Core noise levels have been estimated only for the JT8D-powered aircraft since the JT3D program was terminated before the acoustic analysis was extended to include core noise estimates. Boeing did not include the low frequency core noise component in the refanned 727 and 737 noise levels in the Phase I NAID's. Accordingly, the refan EPNL values at FAR-36 takeoff with cutback given in Table 11 and Figure 20 include an increase of 1.5 EPNdB to the NAID values to allow for core noise for these aircraft. Douglas estimates for the DC-9 already include the low frequency core noise estimates in the NAID values.

The sensitivity of community noise exposure to uncertainties in source noise levels is illustrated in Figure 25, using the 727 aircraft as an example. Footprint area is given as a function of the EPNdB contour of interest. For example, the 95 EPNdB contour for the current production aircraft encloses 9.5 sq. miles. The refan curve shown is for an intermediate level of treatment and represents inputs of noise data based on the best design estimates available. If further testing proves that these estimates are incorrect by ± 2 EPNdB, the footprint area curves would change as shown. For the 95 EPNdB contour, the refan area reduction from the current area could be from 87 to 77%.

Again, it should be stressed that the sensitivity of footprint calculations to input data and calculational procedure must be recognized in any attempt to compare footprints discussed herein with those shown in the contractor documents or with those from other sources. The most current noise data and aircraft flight profiles were used in the footprints shown. The relative benefits of various refan options (acoustic treatment levels) are believed to be well represented.

TABLE 11 - NOISE LEVELS AT FAR-36 MEASUREMENT POINTS FOR BASELINE AND RETROFITTED JT8D-POWERED AIRCRAFT

| AIRCRAFT | FAR-36 MEASUREMENT | EFFECTIVE PERCEIVED NOISE LEVELS - EPNdB | | | | | | | | |
|---|---|---|---|---|---|---|---|---|---|---|
| | | FAR-36 STANDARD | CURRENT AIRCRAFT | | REFANNED AIRCRAFT | | | | | |
| | | | | | MINIMUM | | INTERMEDIATE | | MAXIMUM | |
| 727-200 172,500# MTOGW | Approach | 104.4 | 109.6 | 5.2* | 99.7 | - 4.7* | 97.7 | - 6.7* | 96.6 | - 7.8* |
| | Takeoff** | 99.0 | 100.0 | 1.0 | 91.1 | - 8.9 | 91.0 | - 9.0 | 88.8 | -10.2 |
| | Sideline | 104.4 | 99.9 | -4.5 | 90.2 | -14.2 | 89.3 | -15.2 | 84.4 | -20.0 |
| 737-200 103,500# | Approach | 102.9 | 110.9 | 8.0 | 101.9 | - 1.0 | 99.9 | - 3.0 | 96.9 | - 6.0 |
| | Takeoff** | 95.3 | 96.8 | 1.5 | 87.7 | - 7.6 | 87.8 | - 7.5 | 85.9 | - 9.4 |
| | Sideline | 102.9 | 101.1 | -1.9 | 92.3 | -10.6 | 91.5 | -11.4 | 86.5 | -16.4 |
| DC-9-32 108,000# | Approach | 103.1 | 108.0 | 4.9 | 100.0 | - 3.1 | -- | -- | 99.0 | - 4.1 |
| | Takeoff** | 95.6 | 97.0 | 1.4 | 85.0 | -10.6 | -- | -- | 84.0 | -11.6 |
| | Sideline | 103.1 | 102.0 | -1.1 | 90.0 | -13.1 | -- | -- | 90.0 | -13.1 |

* ΔEPNdB relative to FAR-36
** Cutback power on takeoff per FAR-36

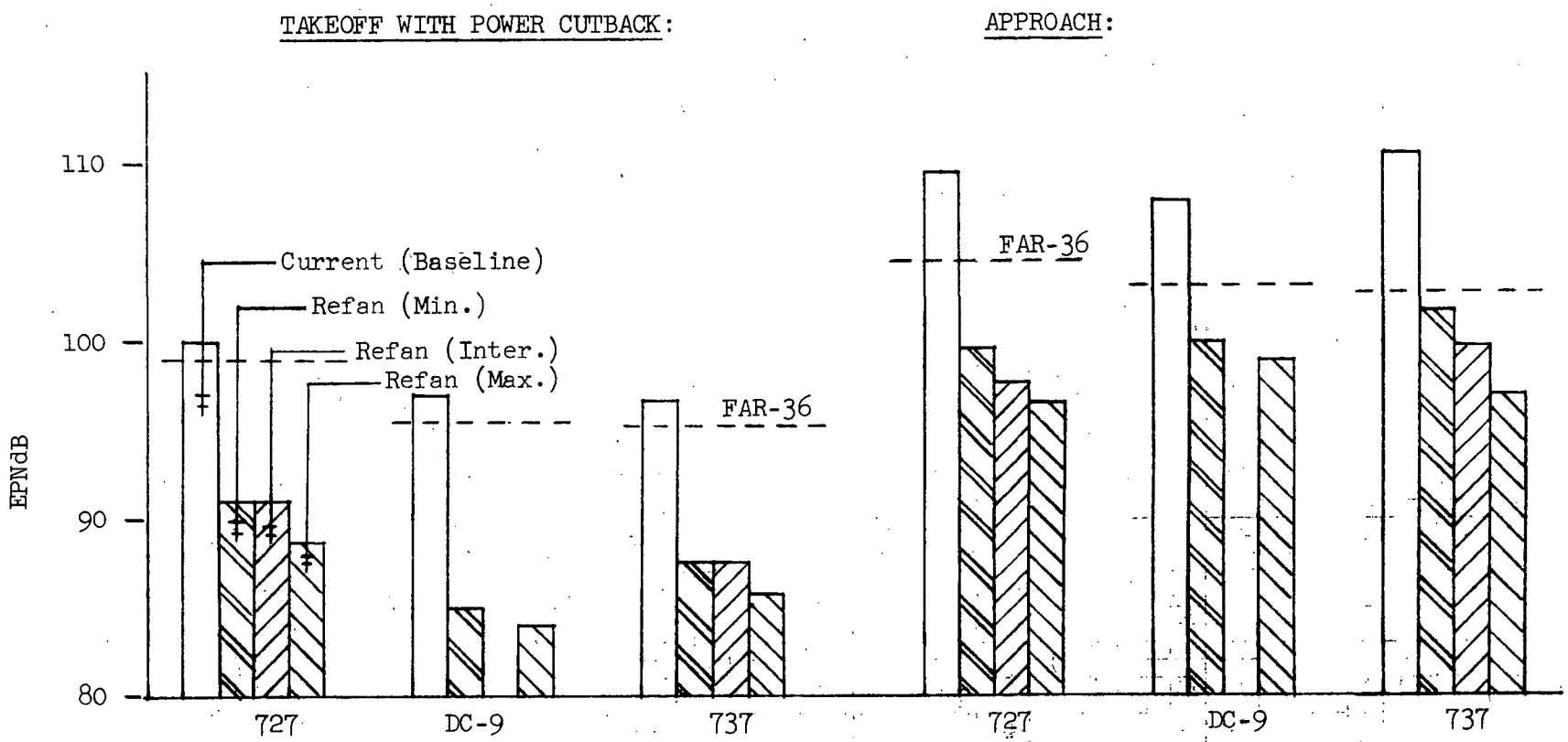


FIGURE 20. - NOISE LEVELS AT FAR-36 MEASURING STATIONS FOR JT8D-POWERED AIRCRAFT

| CONFIGURATION | Footprint Area, Sq. Mi. | | | Area Reduction from Current, Percent |
|---|---|---|---|---|
| | Approach | Takeoff | Total | |
| Current | 3.1 | 6.7 | 9.5 | - |
| Refan (Inter.) | 0.3 | 1.5 | 1.7 | 82 |

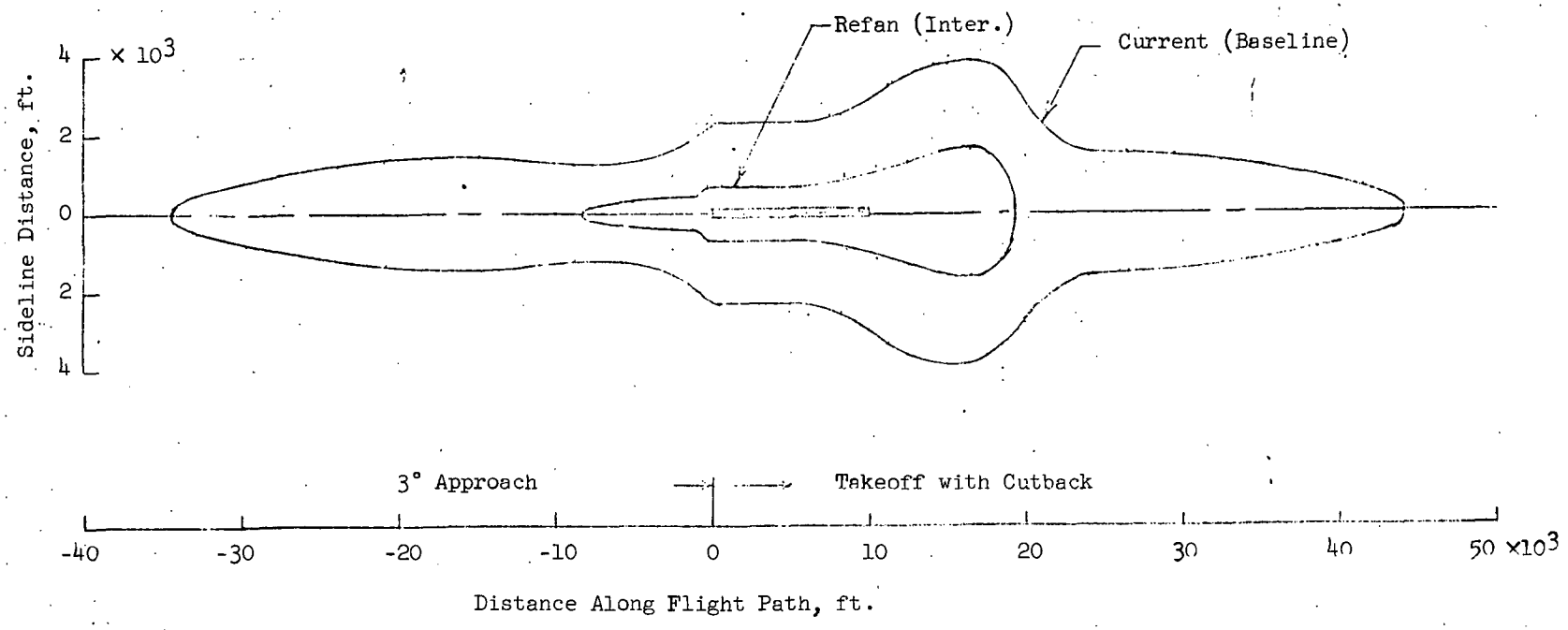


FIGURE 21.- 95-EPNdB FOOTPRINT COMPARISON FOR 727-200 AIRCRAFT

| CONFIGURATION | Footprint Area, Sq. Mi. | | | Area Reduction from Current, Percent |
|---|---|---|---|---|
| | Approach | Takeoff | Total | |
| Current | 1.6 | 3.6 | 4.9 | - |
| Refan (Min.) | 0.5 | 0.8 | 1.2 | 76 |

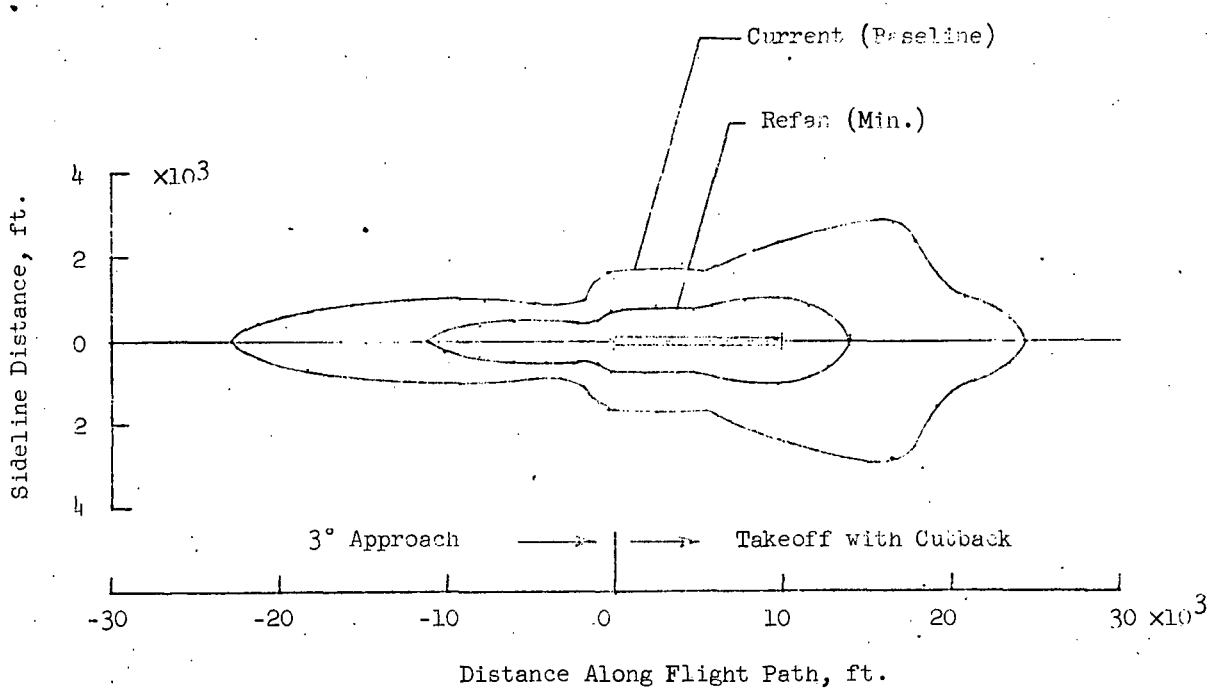


FIGURE 22.- 95-EPNdB FOOTPRINT COMPARISON FOR DC-9-32 AIRCRAFT

| CONFIGURATION | Footprint Area, Sq. Mi. | | | Area Reduction from Current, Percent |
|---|---|---|---|---|
| | Approach | Takeoff | Total | |
| Current | 2.7 | 5.2 | 7.5 | - |
| Refan (Inter.) | 0.6 | 1.0 | 1.4 | 81 |

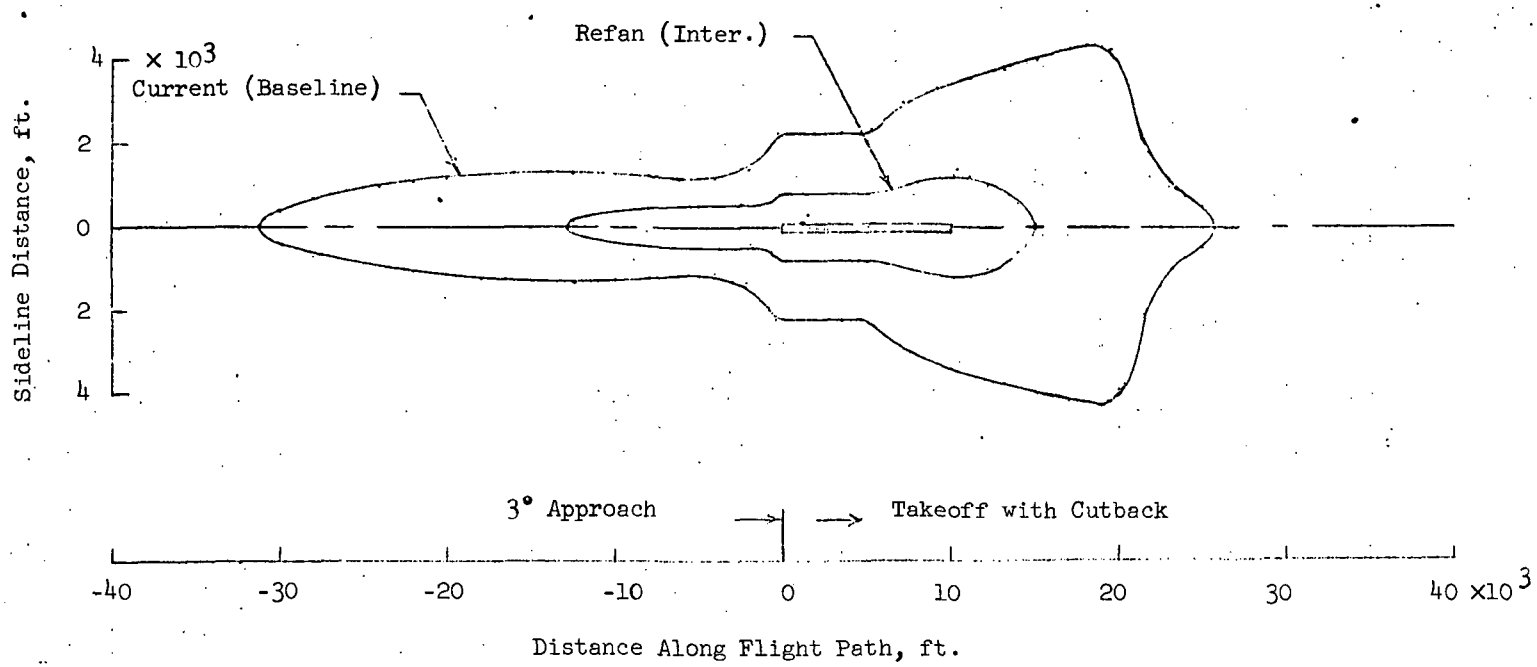


FIGURE 23.- 95-EPNdB FOOTPRINT COMPARISON FOR 737-200 AIRCRAFT

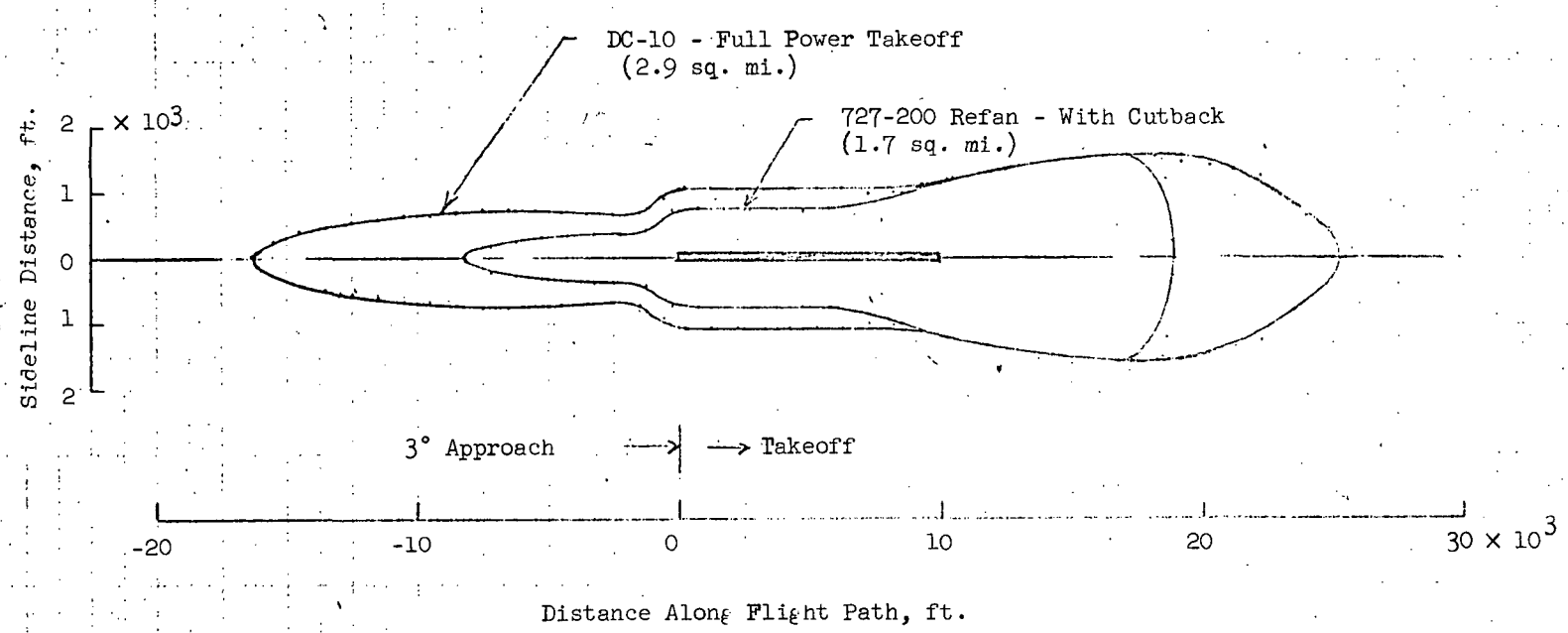


FIGURE 24.- 95-EPNdB FOOTPRINT COMPARISON FOR 727 REFAN AND DC-10 AIRCRAFT

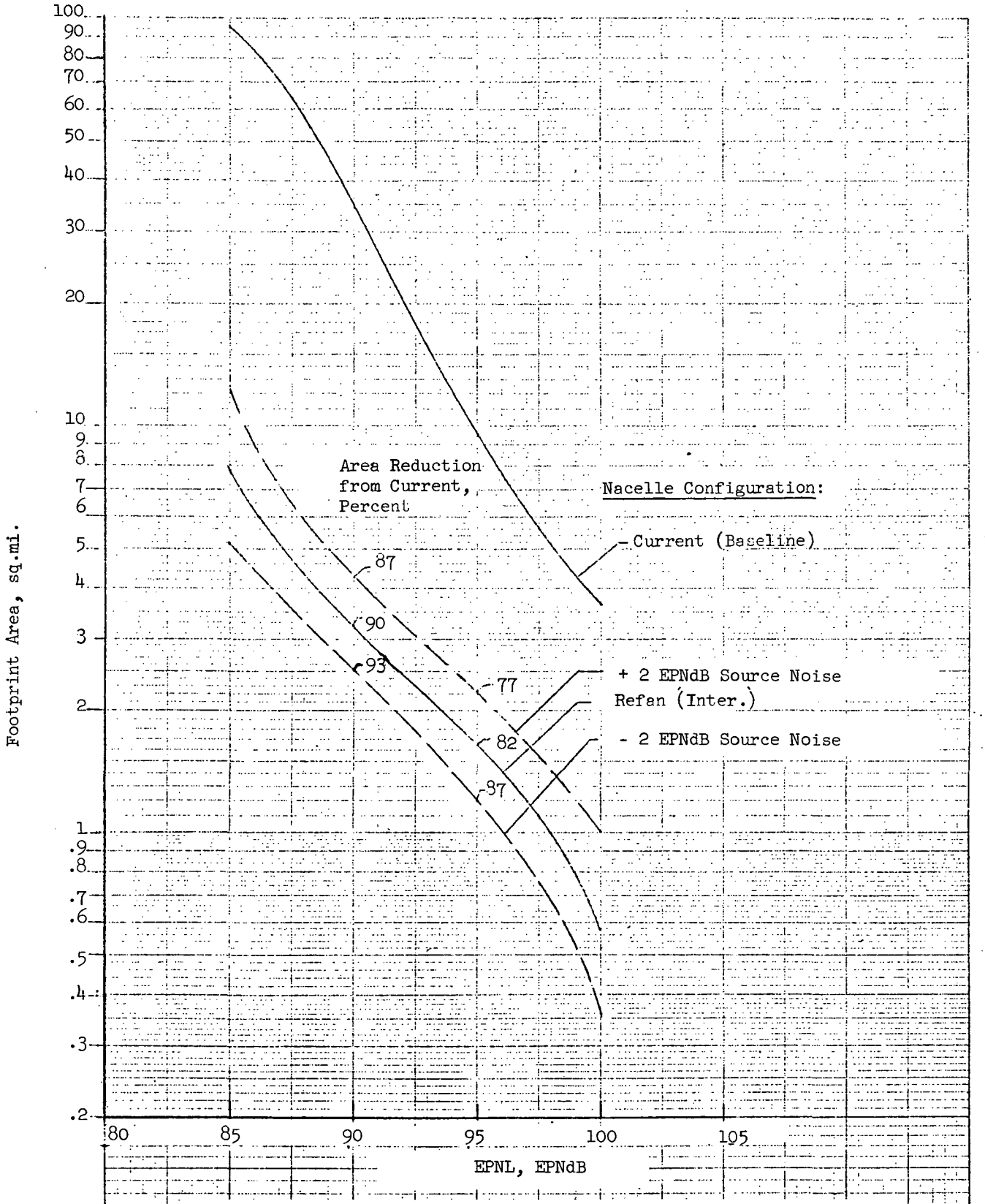


FIGURE 25. - 727-200 FOOTPRINT AREA SENSITIVITY

## PROGRAM STATUS

### JT3D Program

As noted earlier, the JT3D portion of the Refan Program was terminated in January 1973. At that time, the JT3D final engine definition and preliminary design were complete and preparations underway for some design-confirmation component-tests on the single-stage fan, #1 bearing, etc. These tests were terminated but the final engine layout design was continued to completion.

As for the nacelle and airplane integration design (NAID) studies at that time, the preliminary and second-submittal NAIDS were complete. The final summary reports of both airframe contractors, as well as the retrofit-economic study reports have since been received and included in the results herein. Design-confirmation model-tests were terminated except for the 707 flutter tests and DC-8 long-duct refan interference drag tests which have since been reported. No significant problems in refan of these aircraft were found.

### JT8D Program

The JT8D program will be continued into Phase II. The Phase I work, originally scheduled for completion in April 1973, was extended through June 1973 when Phase II started. The time extension was used to complete the various Phase I studies and reports by the contractors, to finalize Phase II negotiations with the contractors, and to further evaluate the refan nacelles to be designed, fabricated and tested in Phase II.

Phase II work for the engine contractor will consist of engine detail design, fabrication, and testing which includes both full-scale engine and component tests. Some component tests are now in progress and the Phase II program is underway.

Phase II work for the two airframe contractors will include final selection of refan nacelles, final nacelle and airplane modifications design, fabrication of nacelle and modification hardware, and ground or flight testing depending on the funding available.

The 727 refan nacelle to be selected for Phase II design, fabrication and testing will consist of either the intermediate or minimum treatment nacelle or some combination of the two. Due to funding limitations, Phase II will culminate in a ground test of the refan engine using a flightworthy side-engine nacelle and using the same nacelle fitted with a non-flightworthy center-engine S-duct inlet.

Similar refan nacelle treatments would probably be selected for the 737 airplane. However, efforts on the 737 will not be continued into Phase II due to limited funding.

The DC-9 refan nacelle to be selected for Phase II design, fabrication and testing will most likely consist of the late-Phase I minimum treatment nacelle with possibly some additional tailpipe treatment. Phase II will culminate in flight testing of a refanned DC-9-32 airplane.

## REFERENCES

[References 2 to 15 are not publicly available because they are based on ongoing work. Final NASA Contractor Reports covering the individual company efforts on phase I of the Refan Program are currently in preparation and will be published shortly.]


1. NASA Acoustically Treated Nacelle Program. NASA SP-220, 1969.

2. Pratt & Whitney Aircraft: Final Phase I Engine Definition and Characteristics of the JT3D-9 Engine. Rep. PWA-TM-4609, Dec. 1972.

3. Pratt & Whitney Aircraft: JT3D-9 Turbofan Engine Status and Engine Design Report. Rep. PWA-4678, Mar. 1973.

4. Pratt & Whitney Aircraft: Phase I Engine Definition and Characteristics of the JT8D-100 Turbofan Engine. Rep. PWA-TM-4713, Apr. 1973.

5. Boeing Commercial Airplane Co.: 707/JT3D-9 Refan Nacelle and Airplane Integration Definition. Rep. D3-9039-1, Jan. 1973.

6. Boeing Commercial Airplane Co.: 707/JT3D-9 Refan Nacelle, Engineering Summary Report. Rep. D3-9107, Apr. 1973.

7. Boeing Commercial Airplane Co.: Phase I JT3D/JT8D Refan Economic Study. Rep. D6-41205, July 1973.

8. Douglas Aircraft Co.: DC-8 Series 61 Engine and Nacelle/Airframe Integration Definition. Rep. MDC J5731A, Jan. 1973.

9. Douglas Aircraft Co.: Preliminary Retrofit and Economic Analysis. Rep. MDC J5734-1, Jan. 1973.

10. Douglas Aircraft Co.: Retrofit and Economic Analysis. Rep. MDC J5737, July 1973.

11. Douglas Aircraft Co.: DC-8 Series 63 Engine and Nacelle/Airframe Integration Definition. Jan. 1973.

12. Boeing Commercial Airplane Co.: Phase I 727 JT8D-109 Refan Nacelle and Airplane Integration Definition. Rep. D6-41170, June 1973.

13. Boeing Commercial Airplane Co.: Phase I 737 JT8D-109 Refan Nacelle and Airplane Integration Definition. Rep. D6-32569, June 1973.

14. Douglas Aircraft Co.: DC-9 Series 32 Engine and Nacelle/Airframe Integration Definition. Rep. MDC J5733, Mar. 1973.

15. Douglas Aircraft Co.: DC-9 Series 32 Engine and Nacelle/Airframe Integration Definition. Rep. MDC J5733A, May 1973.