General Disclaimer

One or more of the Following Statements may affect this Document

- This document has been reproduced from the best copy furnished by the organizational source. It is being released in the interest of making available as much information as possible.

- This document may contain data, which exceeds the sheet parameters. It was furnished in this condition by the organizational source and is the best copy available.

- This document may contain tone-on-tone or color graphs, charts and/or pictures, which have been reproduced in black and white.

- This document is paginated as submitted by the original source.

- Portions of this document are not fully legible due to the historical nature of some of the material. However, it is the best reproduction available from the original submission.

Produced by the NASA Center for Aerospace Information (CASI)

NATIONAL AERONAUTICS AND SPACE ADMINISTRATION

(NASA-CR-128785) INVESTIGATION OF CONFIGURATION EFFECTS ON ENTRY HEATING DISTRIBUTIONS AT MACH NO. EQUALS 8.0 (OH41A) (Chrysler Corp.) 68 p HC $5.50 CSCL 22B G3/31

N74-10804

Unclas 21934

SPACE SHUTTLE

AEROTHERMODYNAMIC DATA REPORT

JOHNSON SPACE CENTER

HOUSTON, TEXAS

DATA MANagement services

SPACE DIVISION CHRYSLER CORPORATION

September 1973

DMS-DR-2076
NASA CR-128,785

INVESTIGATION OF CONFIGURATION EFFECTS ON ENTRY HEATING DISTRIBUTIONS AT MACH NO = 8.0 (OH41A)

BY

H. Gorowitz, Rockwell International
R. White and A. D'Errico, GAC

Prepared under NASA Contract Number NAS9-13247

BY

Data Management Services
Chrysler Corporation, Space Division
New Orleans, Louisiana 70189

FOR

Engineering Analysis Division
Johnson Space Center
National Aeronautics and Space Administration
Houston, Texas

WIND TUNNEL SPECIFICS:

Test Number:	LaRC VDHT 4060/4079
NASA Series No.:	OH41A
Date:	May 8 - 10, 1973

FACILITY COORDINATOR:

David R. Stone
Langley Research Center
SSD-Hypersonic Analysis Section
Building 1247B, Room 120B
Mail Stop 163-A
Langley Station
Hampton, Virginia 23365

PROJECT ENGINEERS:

H. Gorowitz
Rockwell International
12214 Lakewood Blvd.
Mail Code (AC07)
Downey, California
Phone: (213) 922-1567

R. White
Grumman Aerospace Corp.
Bethpage, New York
(516) 575-7044

A. D'Errico
Grumman Aerospace Corp.
Bethpage, New York
Phone: (516) 575-7044

DATA MANAGEMENT SERVICES:

This document has been prepared by:

A. T. Kavanaugh
Data Operations

This document has been reviewed and is approved for release:

for N. D. Kemp
Data Management Services

Chrysler Corporation, Space Division, assumes no responsibility for the data displayed herein other than its publication and distribution.

TABLE OF CONTENTS

	PAGE
List of Figures	1
List of Tables	2
List of Photographs	3
Summary	4
Description of Model	5
Configuration Description	7
Data Reduction	8
Test Facility Description	11
Phase-Change Paint Data	12
Tables	13
Photographs	17
Figures	24

(THIS PAGE INTENTIONALLY LEFT BLANK)

LIST OF FIGURES

FIGURE		PAGE
1	Orbiter Configuration (Windward View)	24
2	Orbiter Profile and Nose Configuration	25
3	Orbiter Model Grid System (Plan View)	26
4	Orbiter Model Grid System (Profile View)	27
5-6	Grid Model (Config. SS-H-00326B-6, -7) Windward Camera View (α= 30°, 40°)	28-29
7	Grid Model (Config. SS-H-00326B-6, -7) Profile Camera View (α= 30°, Runs 4060-4064)	30
8	Grid Model (Config. SS-H-00326B-6, -7) Profile Camera View (α= 30°, Runs 4065-4069)	31
9-10	Grid Model (Config. SS-H-00326B-6, -7) Profile Camera View (α= 35°, 40°)	32-33
11-41	Heating Contours (in order of running)	34-64

LIST OF TABLES

TABLE		PAGE
1	Data Reduction Recovery Factors	13
2	Model Material Properties, $\sqrt{k\ \rho\ C_p}$	14
3	Run Schedule	15

LIST OF PHOTOGRAPHS

PHOTO		PAGE
1	Model SS-H-00326-4 (three quarter view)	17
2	Model SS-H-00326B-6 (three quarter view)	18
3	Model NR 110 D (three quarter view)	19
4	Models SS-H-00326-4, SS-H-00326B-6 and NR 110 D (plan view)	20
5	Models SS-H-00326-4 and SS-H-00326B-6 (front view)	21
6	Models SS-H-00326-4 and NR 110 D (front view)	22
7	Models NR 110 D and SS-H-00326B-6 (front view)	23

SUMMARY

This report presents the results of aerodynamic heating investigations conducted on 0.006 scale models of three Rockwell International SSV orbiter configurations in the NASA/LRC - Mach 8 Variable Density Tunnel. During a previous test in this facility (19 March - 28 March 1973), various Rockwell International SSV orbiter configurations were tested. It was established that lower surface modifications to one of these configurations (Model SS-H-00326-4) would alleviate premature transition. Data acquired in the vicinity of these modifications were invalid since the patching epoxy used was different from the cast model material. Therefore, the master pattern of this configuration was reworked to incorporate the modifications and three identical models were cast. One of these (SS-H-00326B-5) was striped with a reference grid system and the remaining two used as test models (SS-H-00326B-6 and -7). These three models, a new casting of model SS-H-00326-4, and a model of an earlier Phase B configuration (NR 110 D) comprised the five models utilized for these investigations.

Re-entry data were acquired on these models at angles of attack from 30 to 40 degrees for nominal Reynolds numbers per foot of 1.0, 3.0, 6.0 and 8.0 million utilizing the phase change paint technique. A total of 17 orbiter heating runs and 3 orbiter oil flow runs were completed from 8 May through 10 May 1973 on a 40 hour week basis.

Cognizant personnel included:

H. Gorowitz, Thermodynamics (Rockwell International), (213)922-1567

R. White, Model Design (GAC), (516)575-7044

M. Quan, Test Engineering (Rockwell International), (213)922-2695

A. D'Errico, Test Engineering (GAC), (516)575-7044

DESCRIPTION OF MODEL

Five models were fabricated for this test. The first (SS-H-00326-4) was a previously tested model of the Rockwell International 2A Lightweight Configuration double delta wing orbiter as described on drawings VL 70-000089B, VL 70-000092A and VL 70-000093 with modifications as shown in Figures 1, 2 and 3. The next three models were identical castings of a modification made to the pattern from which model SS-H-00326-4 was made. The modification included filling the lower surface void at the wing/cuff intersection and increasing the left hand planform radius between the wing/cuff leading edges to be symmetrical with the right side. (See photo 5). One of these models (SS-H-00326B-5) was striped with white paint as shown in Figure 4, and used as a reference grid model. The other two were used for testing and designated SS-H-00326B-6 and -7.

The four above mentioned .00593 scale models were cast around 3/4 inch steel stings coated with R.T.V. using material "G", a proprietary Grumman Aerospace Corporation epoxy. It should be noted that the patterns from which these models were cast were designed and fabricated to 0.006 scale. Due to the shrinkage of the model material during casting, the models were measured to actually be 0.00593 scale.

In order to insure sufficient data acquisition time, the upper surface of each wing was slabbed using two control sections. At B.L. 199-045, the wing was slabbed in a straight line from the 40 percent chord to a trailing edge thickness of 0.200 inches model scale. The tip of the wing was slabbed from the 40 percent chord to a trailing edge thickness of 0.060 inches model scale. The rest of the wing was slabbed from the 40 percent chord to a straight line

between these two points on the trailing edge. In addition, the starboard side of each vertical tail was held to contour while the port side was slabbed from the maximum thickness to the trailing edge.

The fifth model used during this test was a 0.006 scale version of a previously tested Rockwell International Phase B design orbiter designated as NR 110 D. It was cast using Stycast 2762 and was equipped with a steel nose cap to prevent excessive ablation and degradation of contour in the nose region.

CONFIGURATION DESCRIPTION

The basic orbiter tested was essentially taken from the Rockwell International 2A Configuration Lines. However, due to the nature of this testing, variations to the basic lines were incorporated into these models. Any required geometric data can be obtained from Figures, 1, 2 and 3 of this report. Each configuration has been designated by its model drawing number and is listed below with a brief description.

CONFIGURATION	DESCRIPTION
SS-H-00326-4	Basic 2A Configuration with exceptions as noted on Figures 1, 2, 3 and in Description of Model section of this report.
SS-H-00326B-5, -6, -7	Same as above with modification as described in Description of Model section of this report.
NR 110 D	Previously tested model of a Rockwell International Phase B design orbiter.

DATA REDUCTION

The phase change paint method, as developed by Jones and Hunt (Reference 1), makes use of temperature sensitive paint which changes phase from an opaque solid to a clear liquid at known temperatures. Sudden exposure of the model, thinly coated with this paint, to a hypersonic airsteam initiates aerodynamic heating, and melting of the paint ensues as local surface temperatures reach the prescribed phase-change temperature. The propagation of these isotherms was recorded on motion picture film. This information was used in conjunction with the semi-infinite slab solution of the transient one-dimensional heat conduction equation to compute local heat transfer coefficients, which depend on the time required for phase-change to occur, the time conditions and the thermal properties of the model wall material. A reference grid system was applied to one of the test models which was photographed at each test attitude. These grid photos can be used as overlays to simplify data analysis.

Phase change paint data reduction was based on the solution of the transient one-dimensional heat transfer equation:

$$\frac{\partial T}{\partial t} = \alpha \frac{\partial^2 T}{\partial X^2} \qquad \text{(Eqn 1)}$$

where: T = temperature
t = time
α = thermal diffusivity
X = distance of heat penetration measured normal to model surface.

The solution to this equation was used to compute local film heat transfer coefficients with the following assumptions which describe the boundary conditions:

(a) The depth of heat penetration into the wall was small compared with the wall thickness and surface radius of curvature so that the wall acted like a semi-infinite slab.

$$T(\infty, t_{sec}) = T_{in} \qquad \text{(Eqn 2)}$$

(b) The model was isothermal before injection into the airstream.

$$T(X,0) = T_{in} \qquad \text{(Eqn 3)}$$

(c) The surface experienced an instantaneous step in aerodynamic heat transfer coefficient and this coefficient was invarient with time.

$$\frac{\partial T(0,t_{sec})}{\partial X} = \frac{h}{K_w} \left[T_{AW} - T(0,t_{sec})\right] \qquad \text{(Eqn 4)}$$

(d) The thermal diffusivity of the wall, $\alpha = k/\rho C_p$, was invarient with temperature.

The solution of equation (1) as given in Reference (2) is:

$$\bar{T} = 1 - e^{\beta^2} \operatorname{erfc} \beta \qquad \text{(Eqn 5)}$$

where $\bar{T}$ and β are parameters given as:

$$\bar{T} = \frac{T_{PC} - T_{IN}}{T_{AW} - T_{IN}} \qquad \text{(Eqn 6)}$$

$$\beta = \frac{h\sqrt{t_{sec}}}{\sqrt{k\ \rho\ C_p}} \qquad \text{(Eqn 7)}$$

and:
T_{PC} = Phase change paint temperature (^oF)
T_{IN} = Initial model temperature (^oF)
T_{AW} = Adiabatic wall temperature (^oF)
h = Film heat transfer coefficient (Btu/ft^2-sec-^oF)
t = time (sec)
ρ = Density of model material (lb/ft^3)
C_p = Specific heat of model material (Btu/lb-^oF)
k = Thermal conductivity and model material (Btu/ft-sec-^oF)

For each test run, the parameter $\bar{T}$ was caculated by using Equation (6). For each $\bar{T}$, a β was determined from Equation (5). Since the thermophysical properties, k, ρ and C_p of the model were known and the time required for the phase change to occur was read from the data film, the heat transfer coefficient, h, was calculated for each isotherm by using Equation (7).

The aerodynamic heating rate, $\dot{q}$ (Btu/ft^2-sec), was then calculated as:

$$\dot{q} = h(T_{AW} - T_W) \qquad \text{(Eqn 8)}$$

Heat transfer coefficients, h, were reduced to non-dimensional form as the ratio of h/h_s, were h_s is the theoretical heat transfer coefficient at the stagnation point of a 1-foot radius sphere at model scale. This coefficient was determined by first calculating the stagnation point heating rate $\dot{q}_s$, given by Fay-Riddel as:

$$\dot{q}_s = \frac{.008575}{\sqrt{N_R}} \left[\sqrt{\frac{T_{TO}}{T_W}} \frac{T_W + 198.6}{T_{TO} + 198.6} \right]^{0.4}$$

$$\left[\frac{\rho_\infty \; T_{TO} \sqrt{T_W}}{T_W + 198.6} \sqrt{\frac{.0028871 \; P_{TO} - P_\infty}{\rho_\infty}} \right]^{0.5} \left[H_{TO} - H_W \right] \qquad \text{(Eqn 9)}$$

where:
N_R = Nose radius (ft)
T_{TO} = Tunnel total temperature (°F)
T_W = Wall temperature (°F)
ρ_∞ = Tunnel static density (lb/ft^3)
P_{TO} = Tunnel total pressure lb/ft^2)
P_∞ = Tunnel static pressure (lb/ft^2)
H_{TO}-H_W = Enthalpy difference between wall and free stream (Btu)

By substituting $\dot{q}_s$ into Equation (8), we calculated the stagnation point heat transfer coefficient, h_s.

The data were reduced for the recovery factors listed in Table 1. These recovery factors, R_T, which are a measure of the fraction of the free stream dynamic temperature rise recovered at the wall, are defined as:

$$R_T = \frac{T_{AW}}{T_{TO}} \qquad \text{(Eqn 10)}$$

where:
T_{AW} = Adiabatic wall temperature (°F)
T_{TO} = Tunnel total temperature (°F)

For various tunnel conditions and recovery factors, we solve for T_{AW} which in turn is substituted into Equations (6) and (8).

TEST FACILITY DESCRIPTION

The Langley Mach 8 Variable-Density Hypersonic Tunnel is located in Building 1247D and is under the direction of the Aero-Physics Division. This tunnel is used for fundamental aerodynamic and fluid dynamic investigations over large Reynolds number ranges using pressure and heat transfer measurements. The test medium is air and is heated by a combination of Dowtherm and electrical resistance. Model mounting consists of sting mount with injection mechanism. The tunnel has an axially symmetric contoured nozzle. The test section diameter is 18 inches with a core of 4 to 14 inches depending on pressure. It exhausts into a vacuum tank or the atmosphere.

Examples of operating conditions are as follows:

Stagnation pressure (PSIA) . . . . . 15 to 2930

Stagnation temperature (^{o}R) . . . . . 1160 to 1510

Mach Number . . . . . 7.5 to 8.0

Reynolds number per foot (1/ft) . . . 0.1×10^6 to 12.0×10^6

Running time (SEC), for

Exhausting into vacuum tank	90
Exhausting into atmosphere	600

PHASE CHANGE PAINT DATA

The test results are shown in Figures 11 through 41 in the form of heating contours. The contours are correlated to heat transfer coefficient ratios (h/h_s), the ratio of local heat transfer coefficient on the model surface to the heat transfer coefficient at the stagnation point of a one-foot radius sphere at model scale. A list of the tunnel conditions for each run is presented as Table 3 in the order in which they were made.

TABLE 1: DATA REDUCTION RECOVERY FACTORS

ANGLE OF ATTACK, α (DEG)	RECOVERY FACTOR, T_{AW}/T_{TO}	
	WINDWARD VIEW	PROFILE VIEW
30	.910	.900
35	.920	↓
40	.932	↓

TABLE 2: MODEL MATERIAL PROPERTIES, $\sqrt{k\ \rho\ C_p}$

T_{PC} (°F)	$\sqrt{k\ \rho\ C_p}$ (BTU/FT^2-SEC$^{0.5}$ - °F)
125	.0460
150	.0466
200	.0478
250	.0489
300	.0496
350	.0500
400	.0503

TABLE 3. PHASE CHANGE COATING TEST DATA SUMMARY SHEET

TEST TITLE: _____

TEST NUMBER: _____ TEST FACILITY: NASA/LRC-MACH 8 VDT

TEST DATE: May 8 - 10, 1973 TEST ENGINEER: A. D'Errico

Run No.	Model Configuration Identification	Model Scale	Free Stream Mach Number	Total Pressure (psia)	Total Temp. (^{o}R)	T_{aw} * / T_{total}	$RNX10^6$ / Ft	Phase Change Temp. (^{o}F)	Model Position (degrees)			Camera** Location (in)		
									α	β	ϕ	X	Y	Z
4060	SS-H-00326B-6	.006	7.9	640	1365	***	2.96	300	30	0	180			
4061	-7			645	1335		3.10	350						
4062	-6			640	1340		3.07	150						
4063	-7			640	1340		3.07	250						
4064	-6			180	1235		1.04	150						
4065	-7			175	1275		0.96	125						
4066	-6			1395	1400		6.02	400						
4067	-7			1395	1430		5.81	250						
4068	SS-H-00326 -4			640	1325		3.11	Oil Flow						
4069	SS-H-00326B-6			640	1320		3.13	Oil Flow						
4070	-7			650	1375		2.97	400	40					
4071	-6			625	1325		3.04	300						
4072	-7			640	1335		3.08	200						

** X axis parallel to stream (+downstream, -upstream)
Y axis (+right, -left, as viewed from the rear)
Z axis (+up, -down)

* T_{aw} = adiabatic wall temperature
*** See Table 1.

TABLE 3. PHASE CHANGE COATING TEST DATA SUMMARY SHEET

TEST TITLE: _____

TEST NUMBER: _____ TEST FACILITY: NASA/LRC-MACH 8 VDT

TEST DATE: May 8 - 10, 1973 TEST ENGINEER: A. D'Errico

Run No.	Model Configuration Identification	Model Scale	Free Stream Mach Number	Total Pressure (psia)	Total Temp. (°R)	T_{aw} * / T_{total}	RNX10^6 Ft	Phase Change Temp. (°F)	Model Position (degrees)			Camera** Location (in)		
									α	β	ϕ	X	Y	Z
4073	SS-H-00326B-6	.006	7.9	165	1235	***	0.95	150	40	0	180			
4074	-7			1400	1385		6.15	400						
4075	-6			645	1285		3.2	Oil Flow						
4076	-7			640	1310		3.17	300	35					
4077	NR 110D			1395	1320		6.64	200	30					
4078				1940	1340		8.91	400						
4079				1395	1400		6.02	300						

** X axis parallel to stream (+downstream, -upstream)
Y axis (+right, -left, as viewed from the rear)
Z axis (+up, -down)

* T_{aw} = adiabatic wall temperature
*** See Table 1.

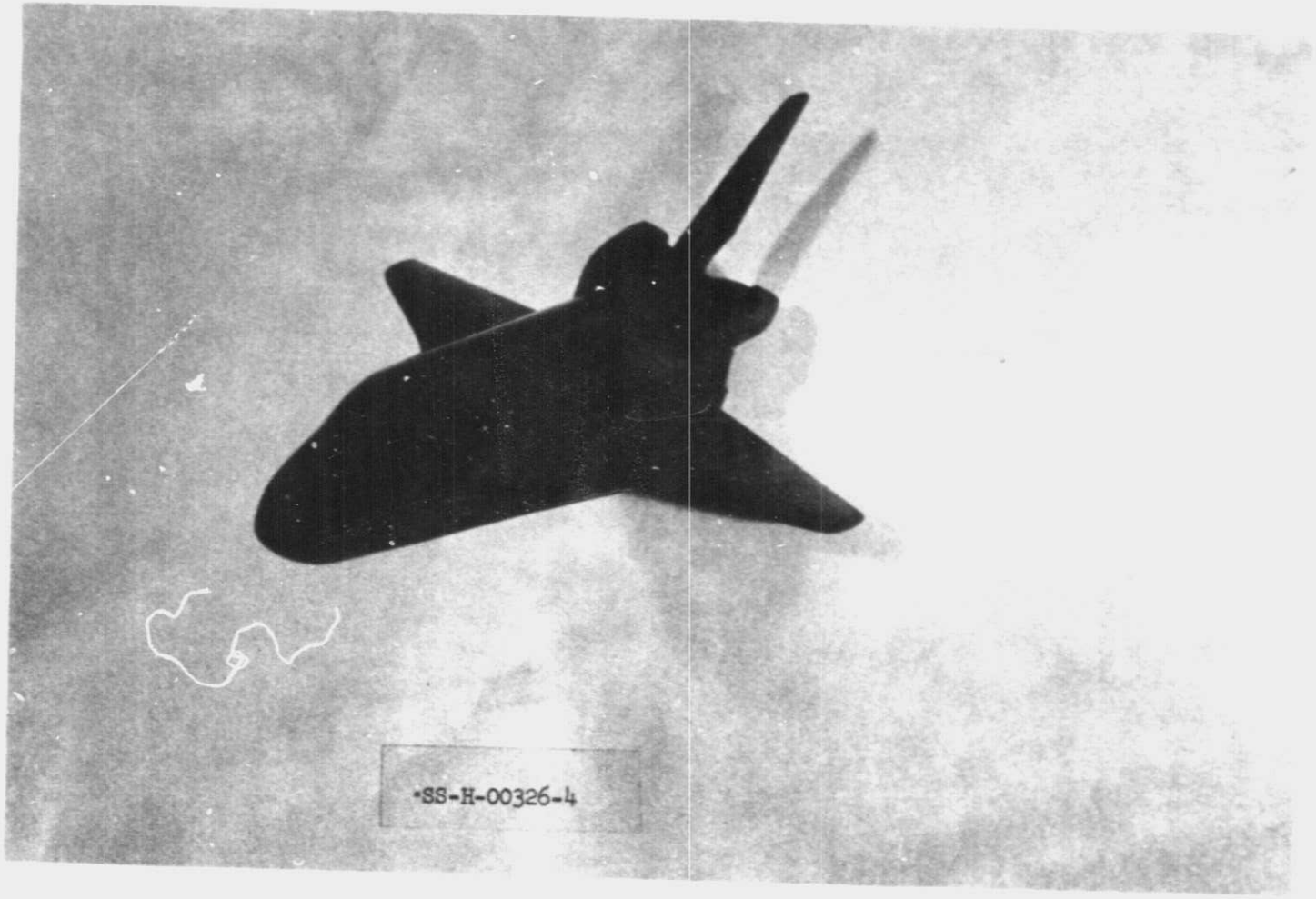

Photograph 1.

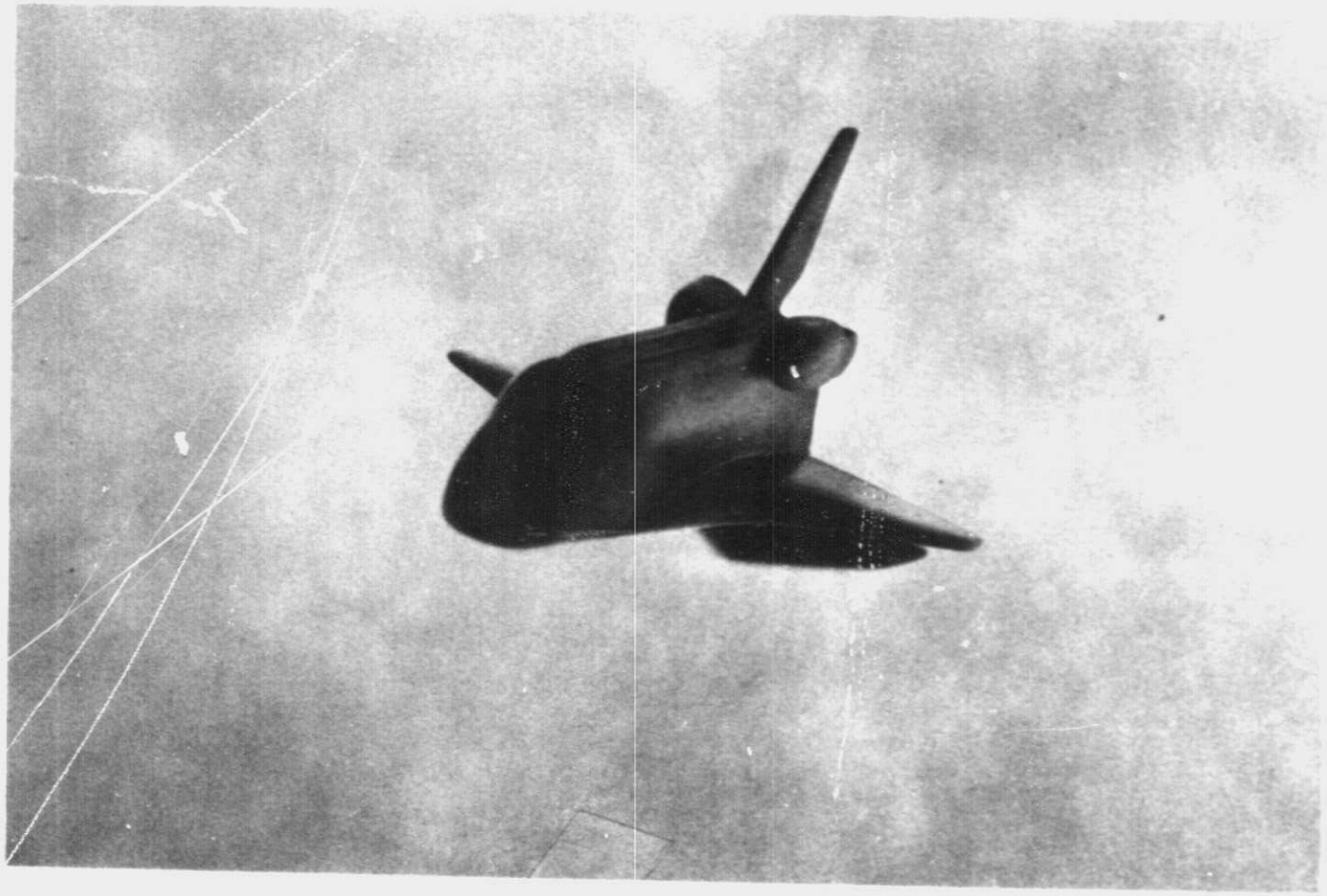

Photograph 2.

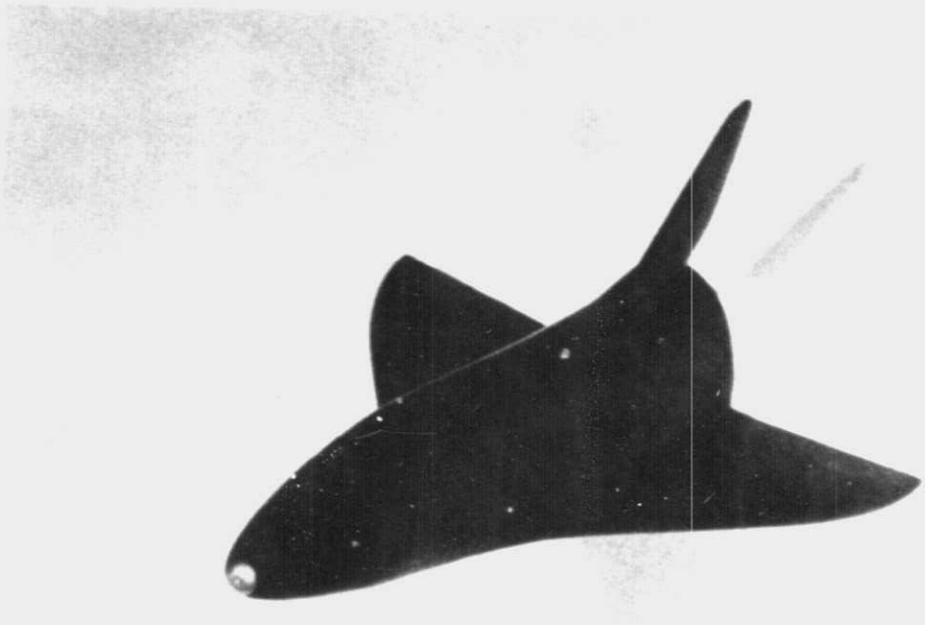

Photograph 3.

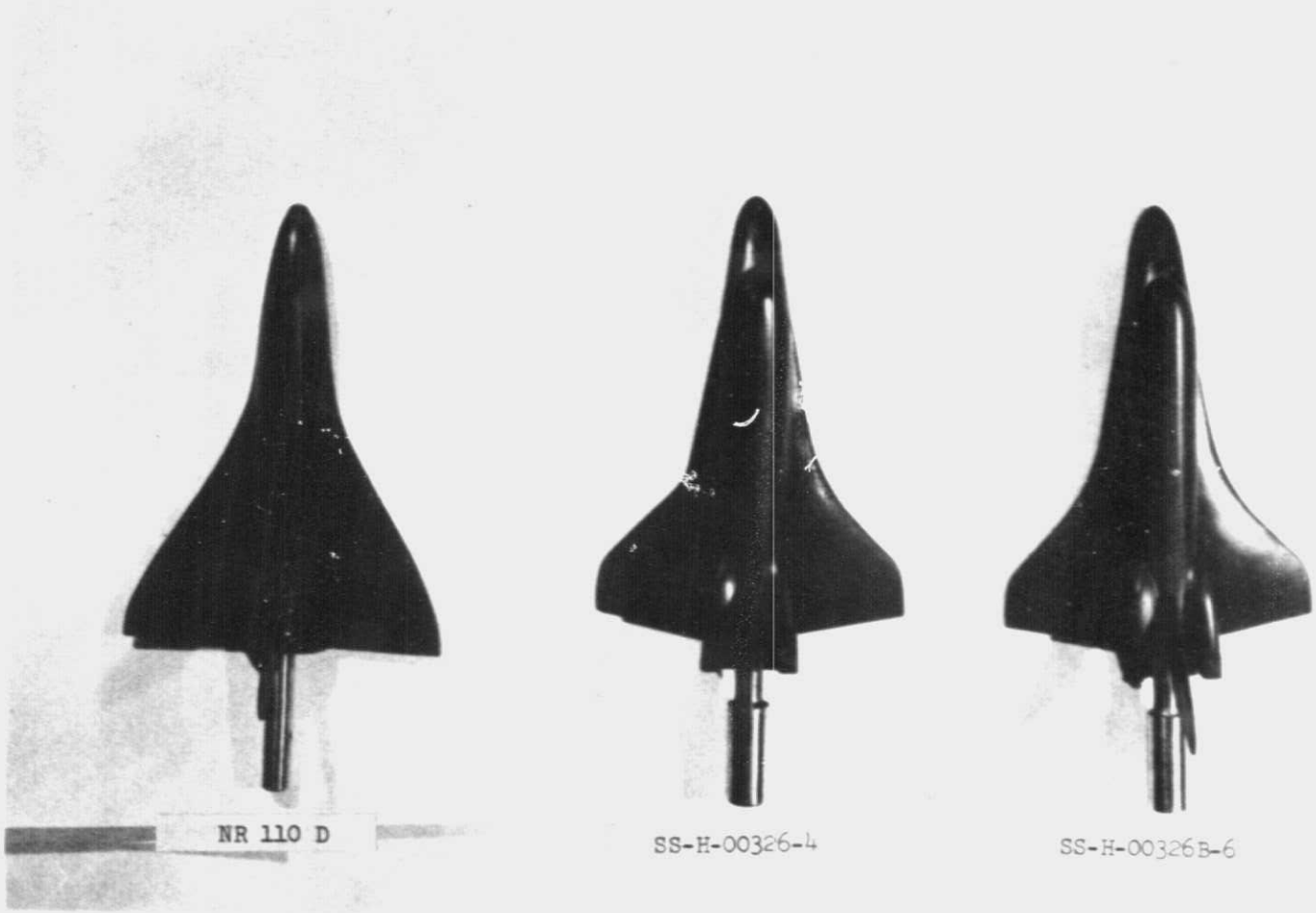

Photograph 4.

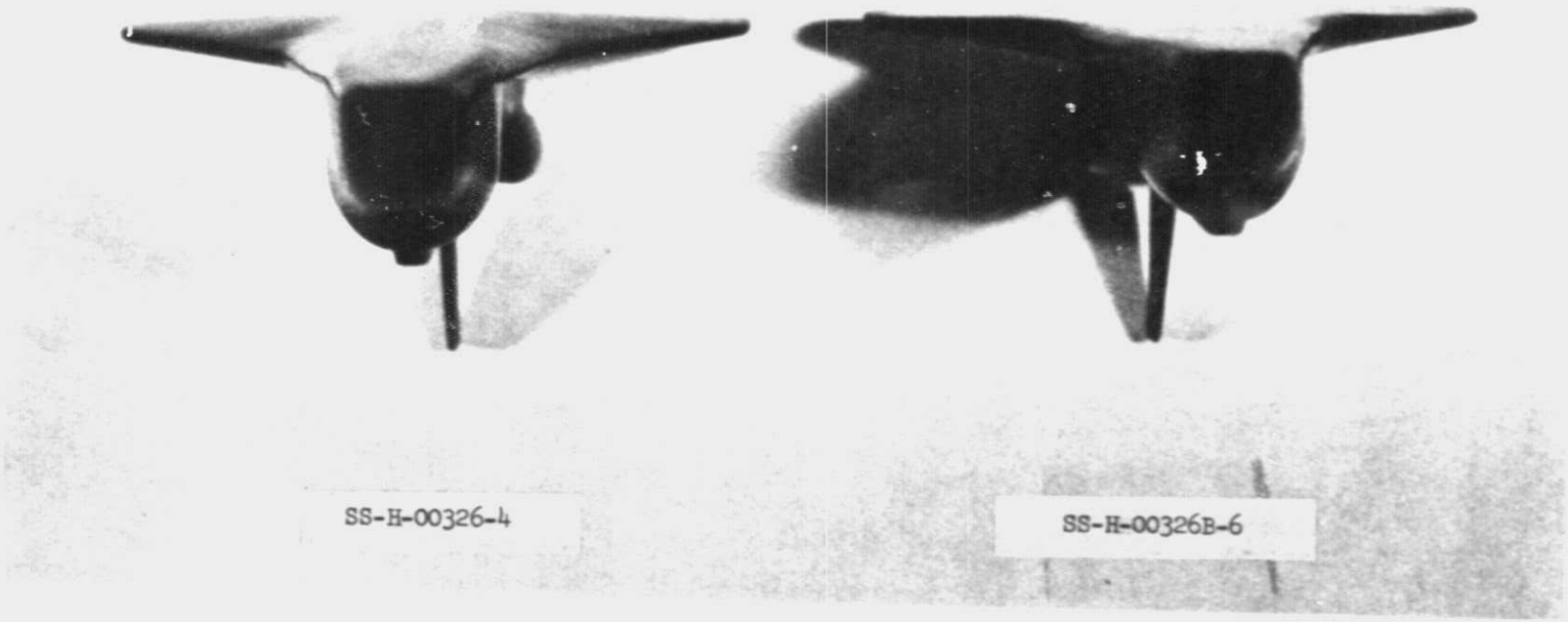

Photograph 5.

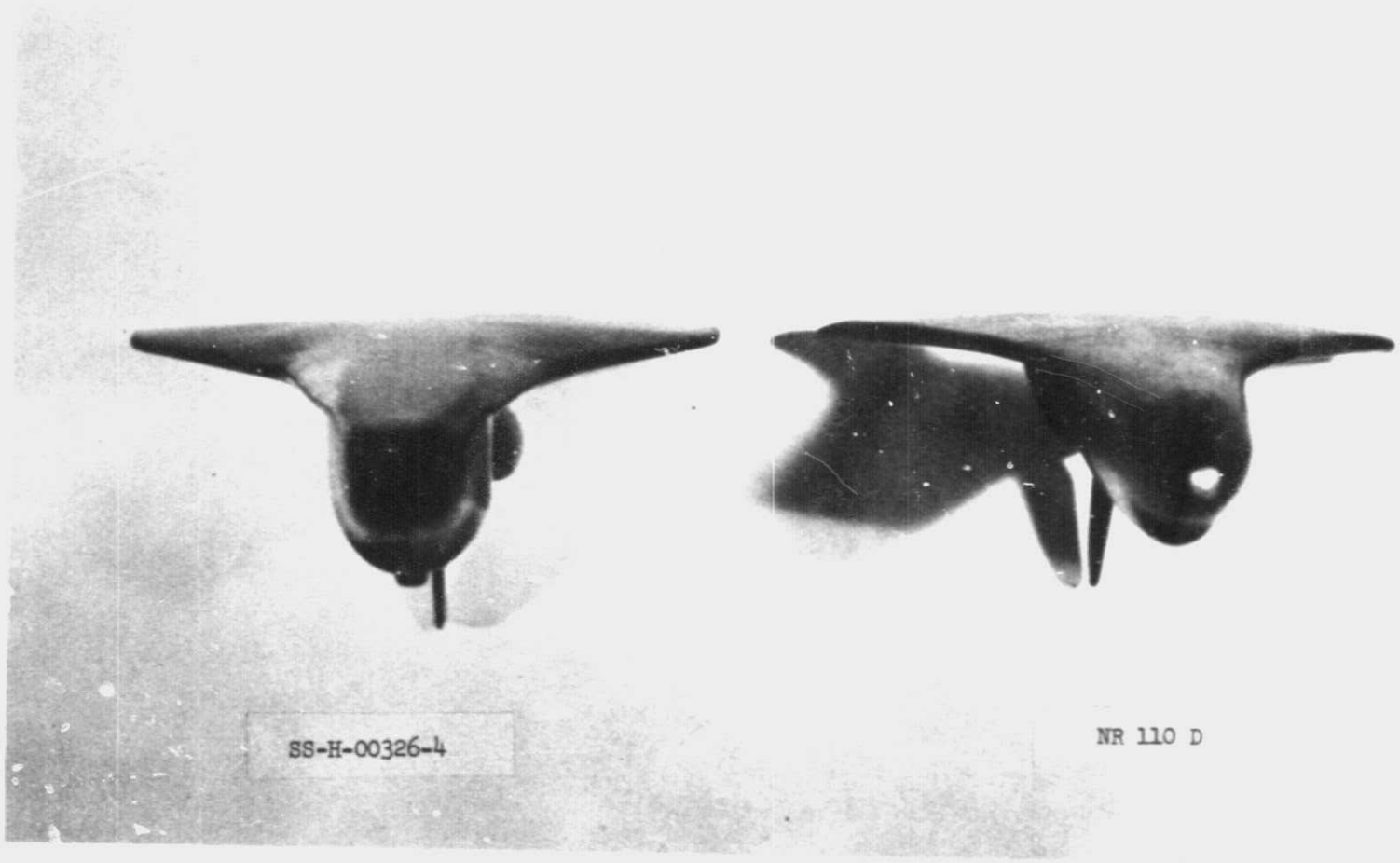

Photograph 6.

NR 110 D

SS-H-00326B-6

Photograph 7.

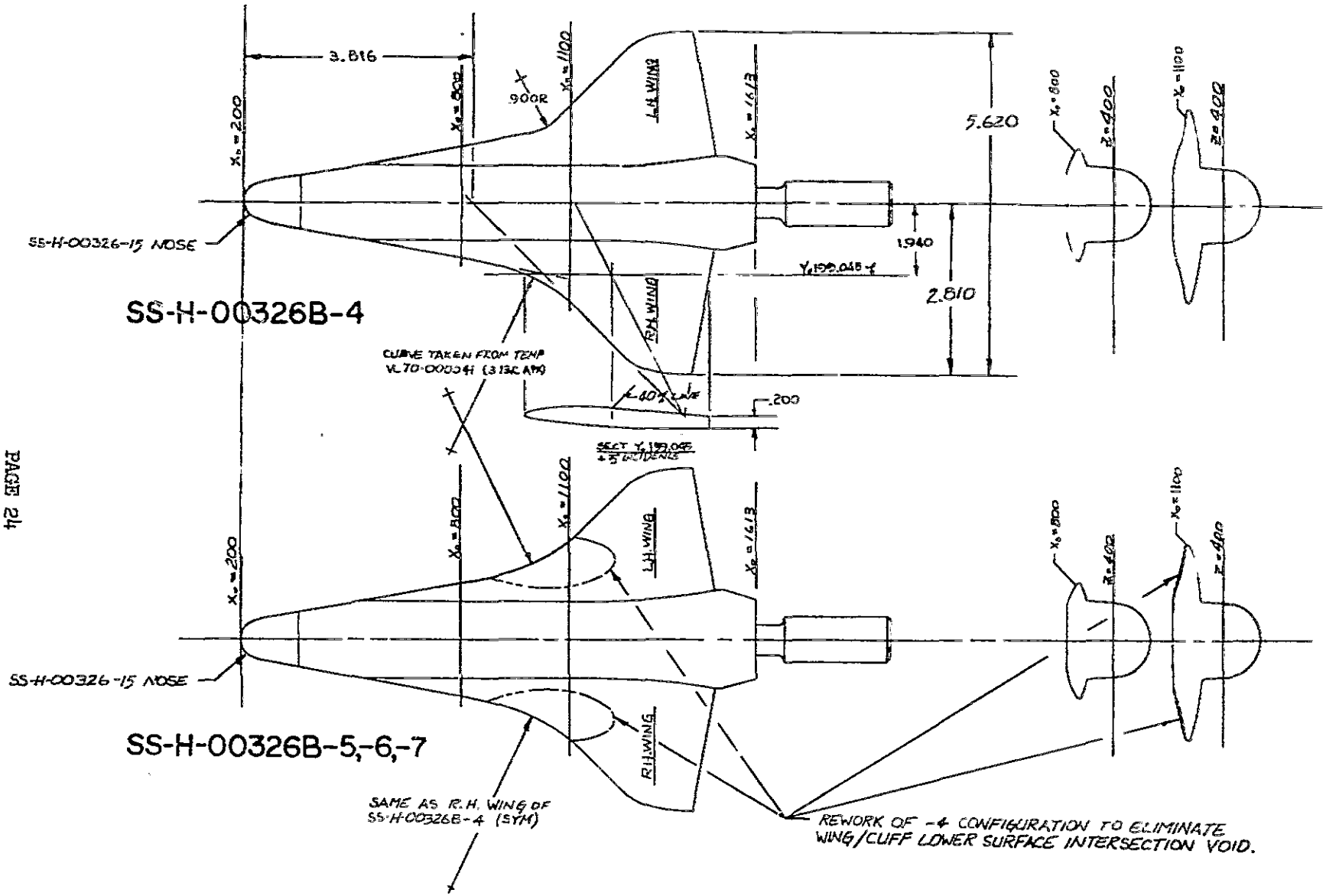

FIGURE 1 ORBITER CONFIGURATION (WINDWARD VIEW)

FIGURE 2 ORBITER PROFILE AND NOSE CONFIGURATION

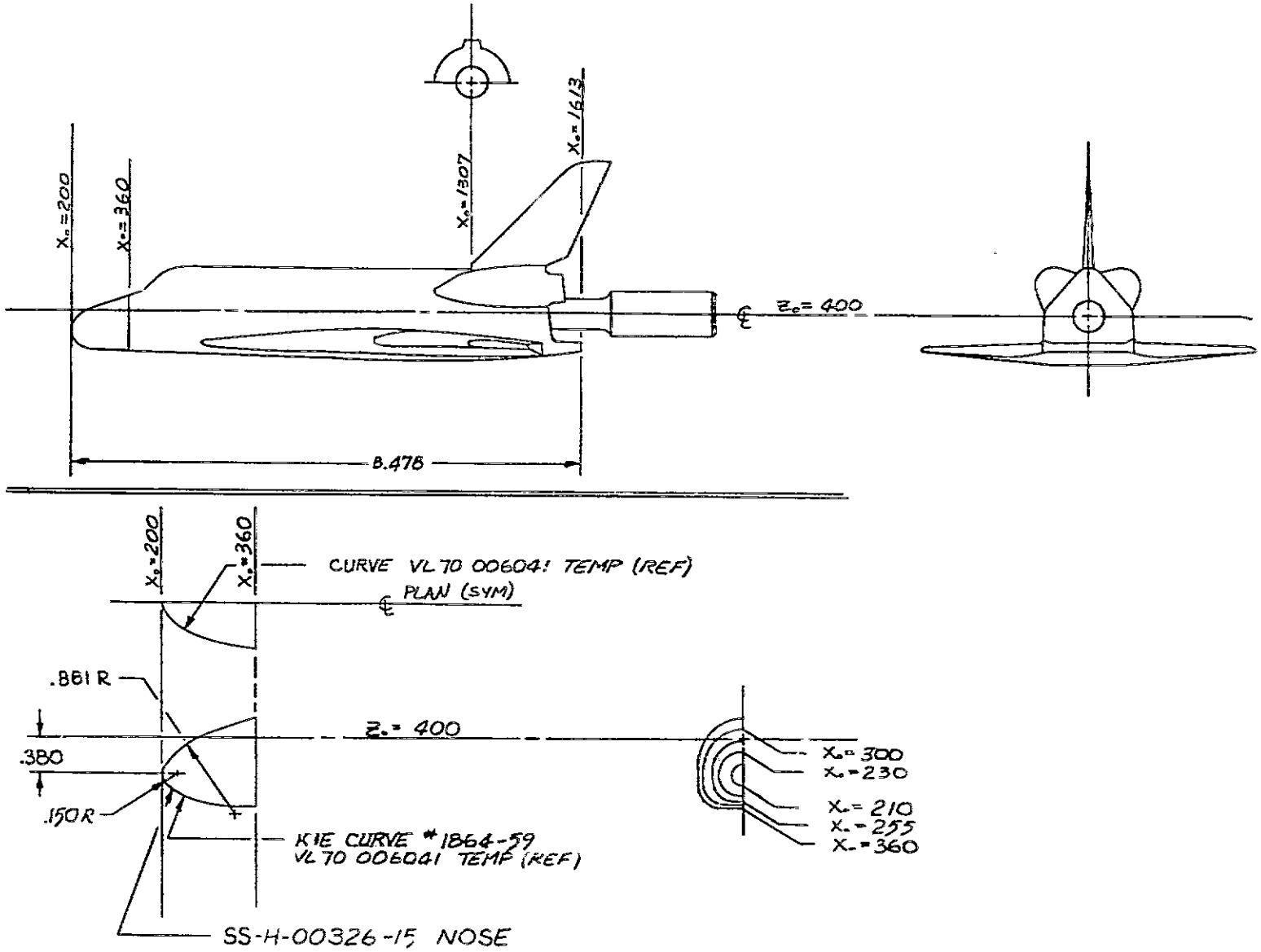

FIGURE 3 ORBITER MODEL GRID SYSTEM (PLAN VIEW)

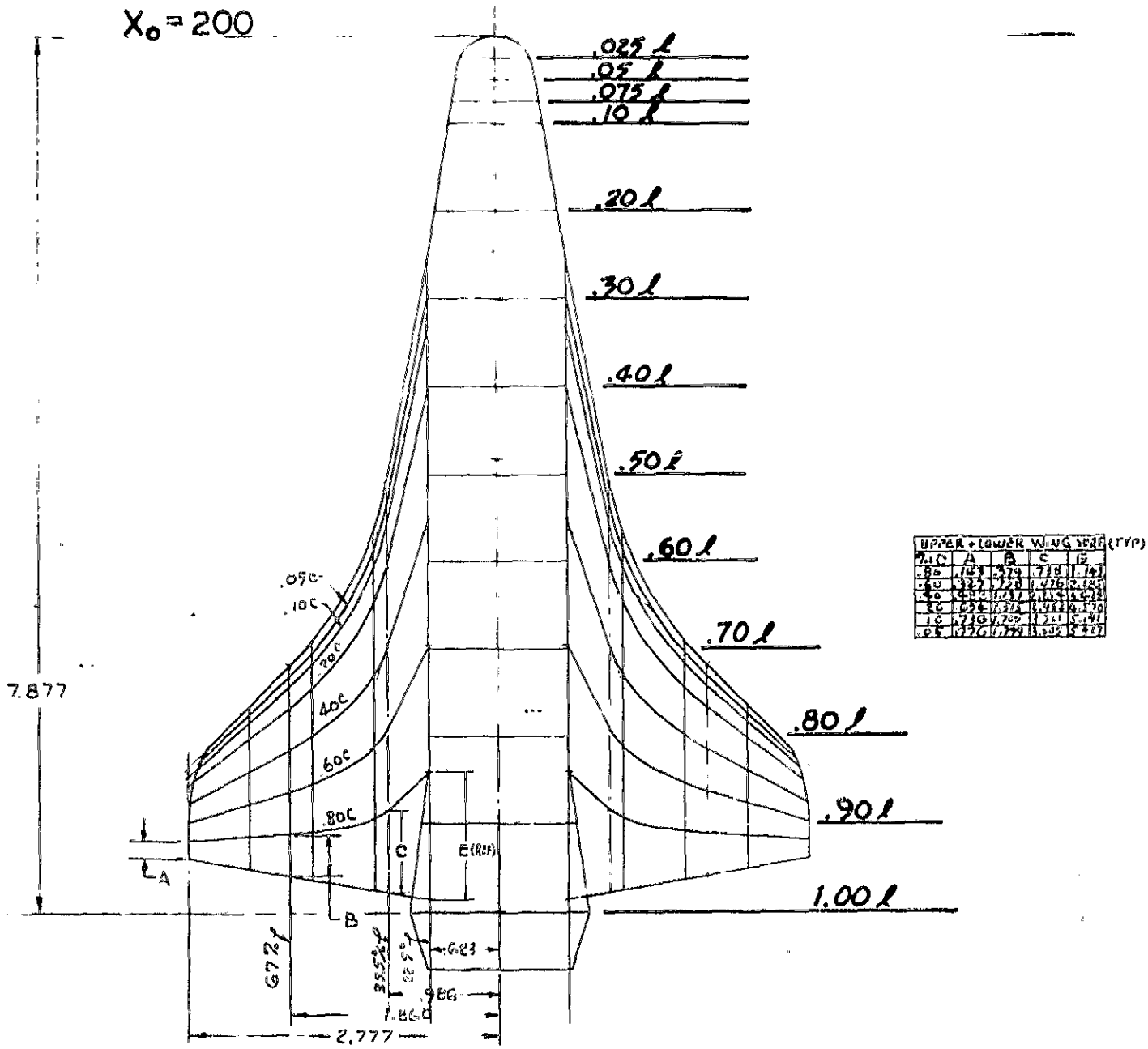

ALL DIMENSIONS ARE .00593 SCALE.

FIGURE 4 ORBITER MODEL GRID SYSTEM (PROFILE VIEW)

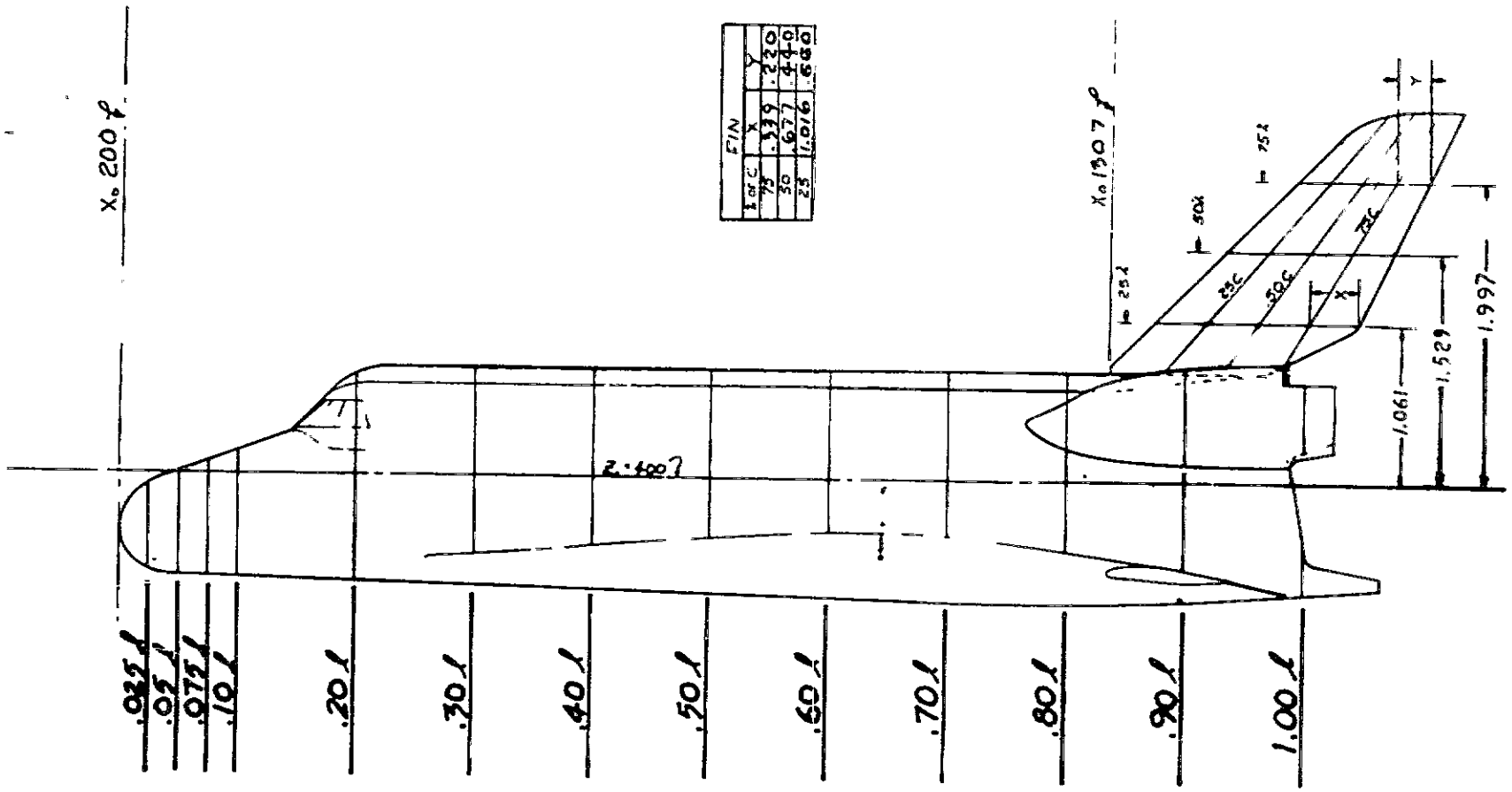

ALL DIMENSIONS ARE .00593 SCALE.

PHASE CHANGE TEST

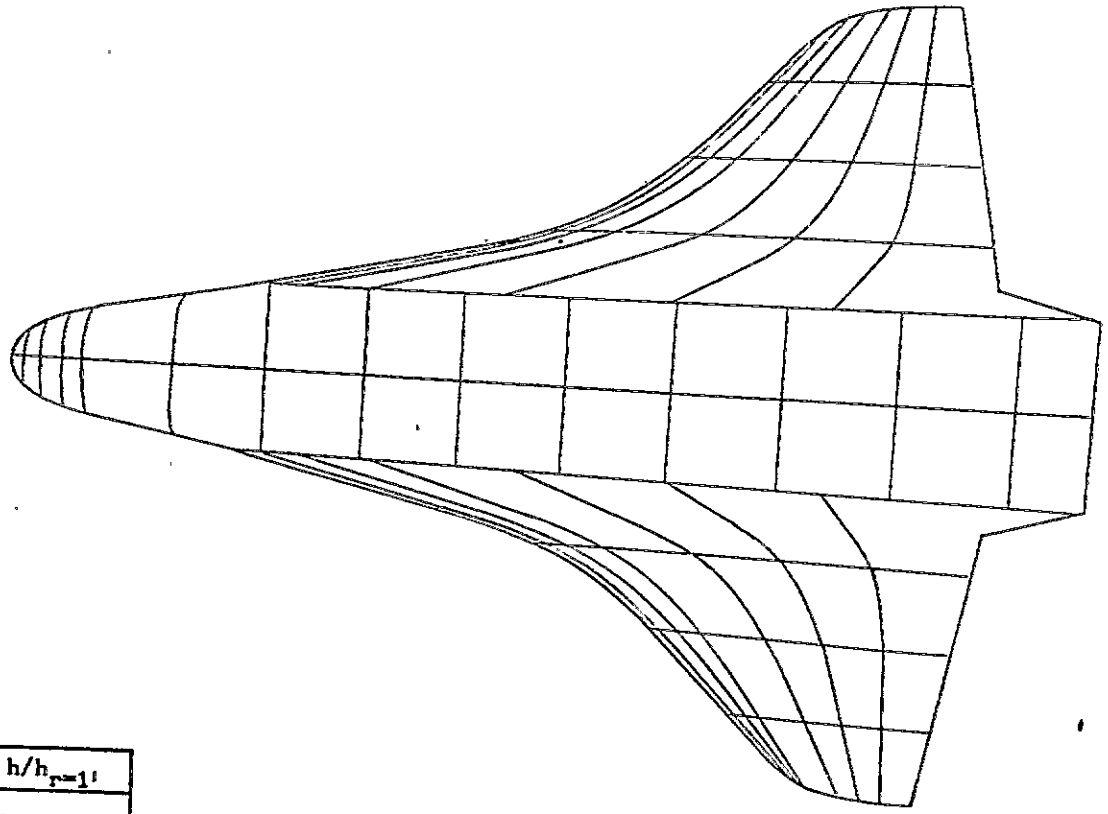

Isotherm	$h/h_{r=1'}$
1	
2	
3	
4	
5	
6	
7	
8	
9	
10	

PAGE 28

FIGURE 5

CONFIG.

SS-H-00326B-6,-7

LENGTH (ft) =

SCALE .006

FACILITY LRC-VDT

TEST

RUN

M_∞ =

P_{total} (psia) =

T_{total} (°R) =

T_{aw}/T_{total} =

R_N per foot =

$T_{phase\ change}$ (°F) =

α = 30

β = 0

ϕ = 180

Camera Coordinates (from model center, x-axis parallel w/ stream, + downstream)

x (in) =

y (in) =

z (in) =

HVD-EVC

NASA Langley (Feb. 1971)

PHASE CHANGE TEST

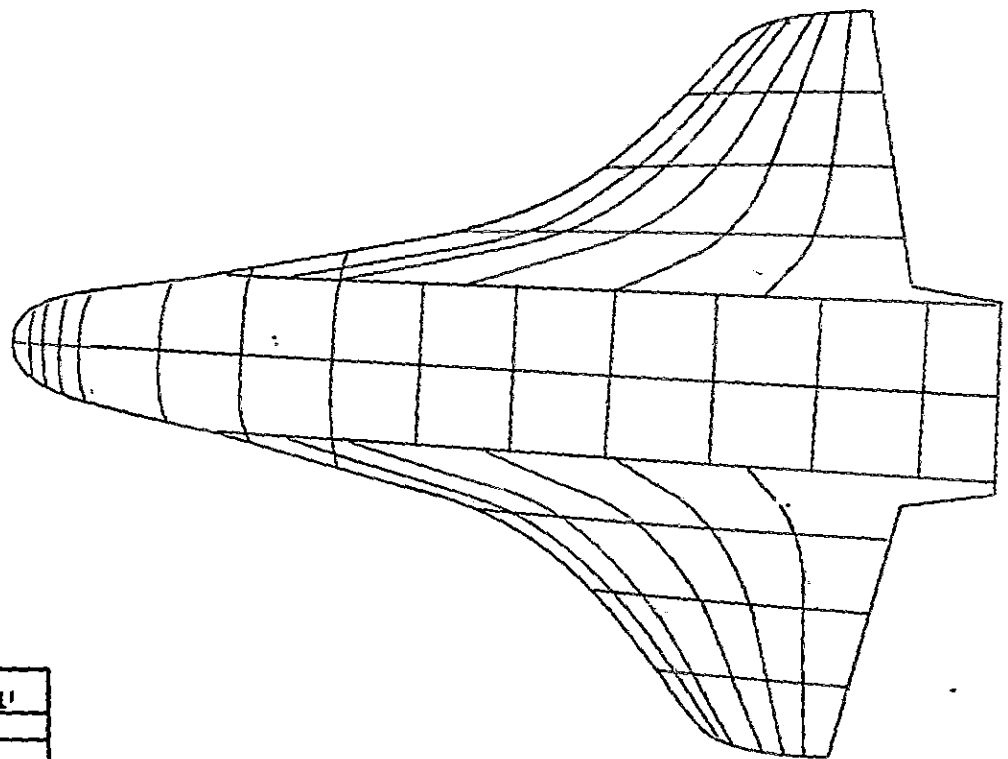

Isotherm	$h/h_{r=1}$
1	
2	
3	
4	
5	
6	
7	
8	
9	
10	

PAGE 29

FIGURE 6

CONFIG.

SS-H-00326B-6, -7

LENGTH (ft) =

SCALE .006

FACILITY LRC-VDT

TEST

RUN

M_∞ =

P_{total} (psia) =

T_{total} (°R) =

T_{aw}/T_{total} =

R_N per foot =

$T_{phase\ change}$ (°F) =

α = 40

β = 0

ϕ = 180

Camera Coordinates (from model center, x-axis parallel w/ stream, + downstream)

x (in) =

y (in) =

z (in) =

PHASE CHANGE TEST

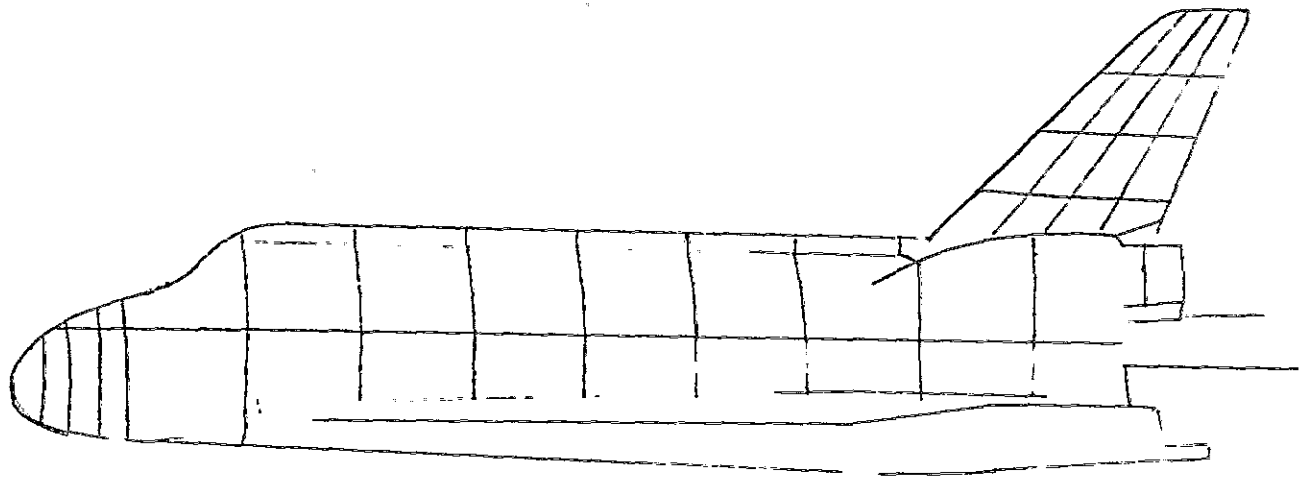

Isotherm	$h/h_{r=1'}$
1	
2	
3	
4	
5	
6	
7	
8	
9	
10	

PAGE 30
FIGURE 7

CONFIG. RUNS 4060-4064

SS-H-00326B-6, -7

LENGTH (ft) =

SCALE .006

FACILITY LRC-VDT

TEST

RUN

M_∞ =

P_{total} (psia) =

T_{total} (°R) =

T_{aw}/T_{total} =

R_N per foot =

$T_{phase\ change}$ (°F) =

α = 30

β = 0

ϕ = 180

Camera Coordinates (from model center, x-axis parallel w/ stream, + downstream)

x (in) =

y (in) =

z (in) =

HVD-EVC

PHASE CHANGE TEST

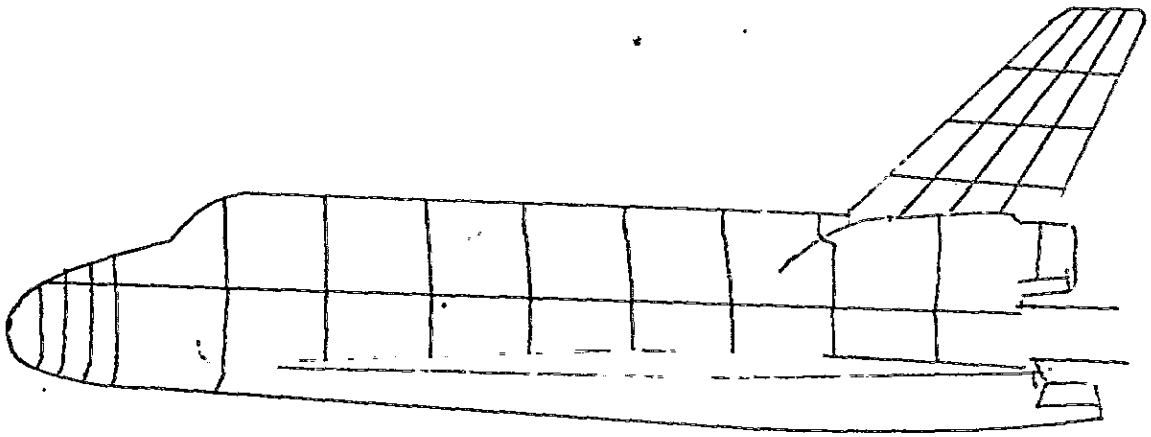

Isotherm	$h/h_{r=1'}$
1	
2	
3	
4	
5	
6	
7	
8	
9	
10	

PAGE 31

FIGURE 8

NASA Langley (Feb. 1971)

RUNS 4065-4069

CONFIG. SS-H-00326B-6, -7

LENGTH (ft) =

SCALE .006

FACILITY LRC-VDT

TEST

RUN

M_∞ =

P_{total} (psia) =

T_{total} (°R) =

T_{aw}/T_{total} =

R_N per foot =

$T_{phase\ change}$ (°F) =

α = 30

β = 0

ϕ = 180

Camera Coordinates (from model center, x-axis parallel w/ stream, + downstream)

x (in) =

y (in) =

z (in) =

HVD-EVCS

PHASE CHANGE TEST

Isotherm	$h/h_{r=1'}$
1	
2	
3	
4	
5	
6	
7	
8	
9	
10	

PAGE 32

FIGURE 9

CONFIG. SS-H-00326B-6,-7

LENGTH (ft) =

SCALE .006

FACILITY LRC-VDT

TEST

RUN

M_∞ =

P_{total} (psia) =

T_{total} (°R) =

T_{aw}/T_{total} =

R_N per foot =

$T_{phase\ change}$ (°F) =

α = 35

β = 0

ϕ = 180

Camera Coordinates (from model center, x-axis parallel w/ stream, + downstream)

x (in) =

y (in) =

z (in) =

NASA Langley (Feb. 1971)

HVD-EVCS

PHASE CHANGE TEST

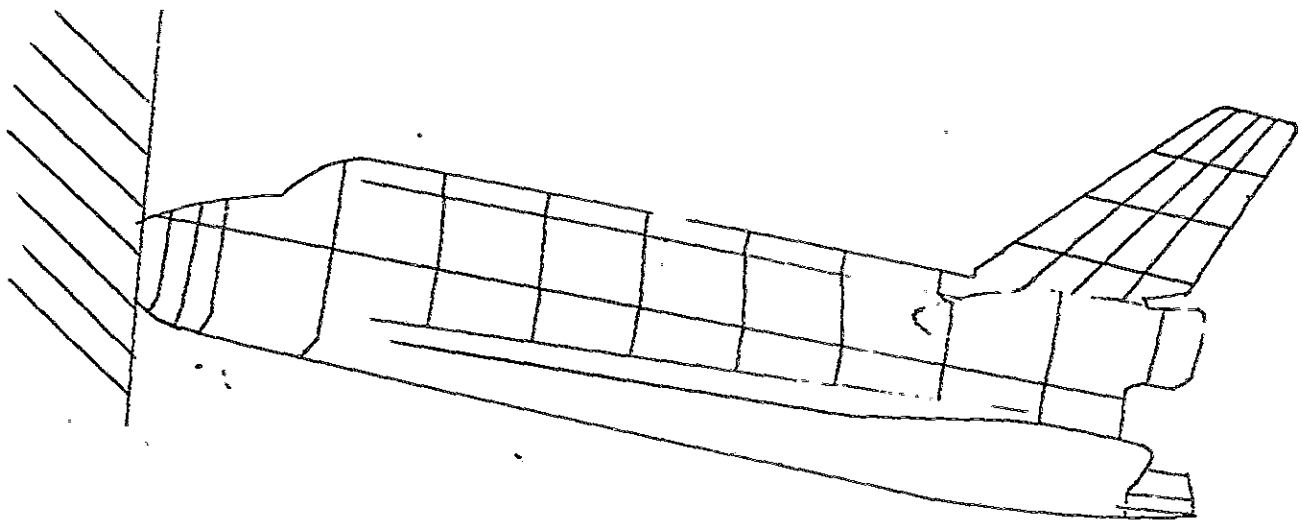

Isotherm	$h/h_{r=1}$
1	
2	
3	
4	
5	
6	
7	
8	
9	
10	

PAGE 33

FIGURE 10

CONFIG.

SS-H-00326B-6, -7

LENGTH (ft) =

SCALE .006

FACILITY LRC-VDT

TEST

RUN

M_∞ =

P_{total} (psia) =

T_{total} (°R) =

T_{aw}/T_{total} =

R_N per foot =

$T_{phase\ change}$ (°F) =

α = 40

β = 0

ϕ = 180

Camera Coordinates (from model center, x-axis parallel w/ stream, + downstream)

x (in) =

y (in) =

z (in) =

PHASE CHANGE TEST

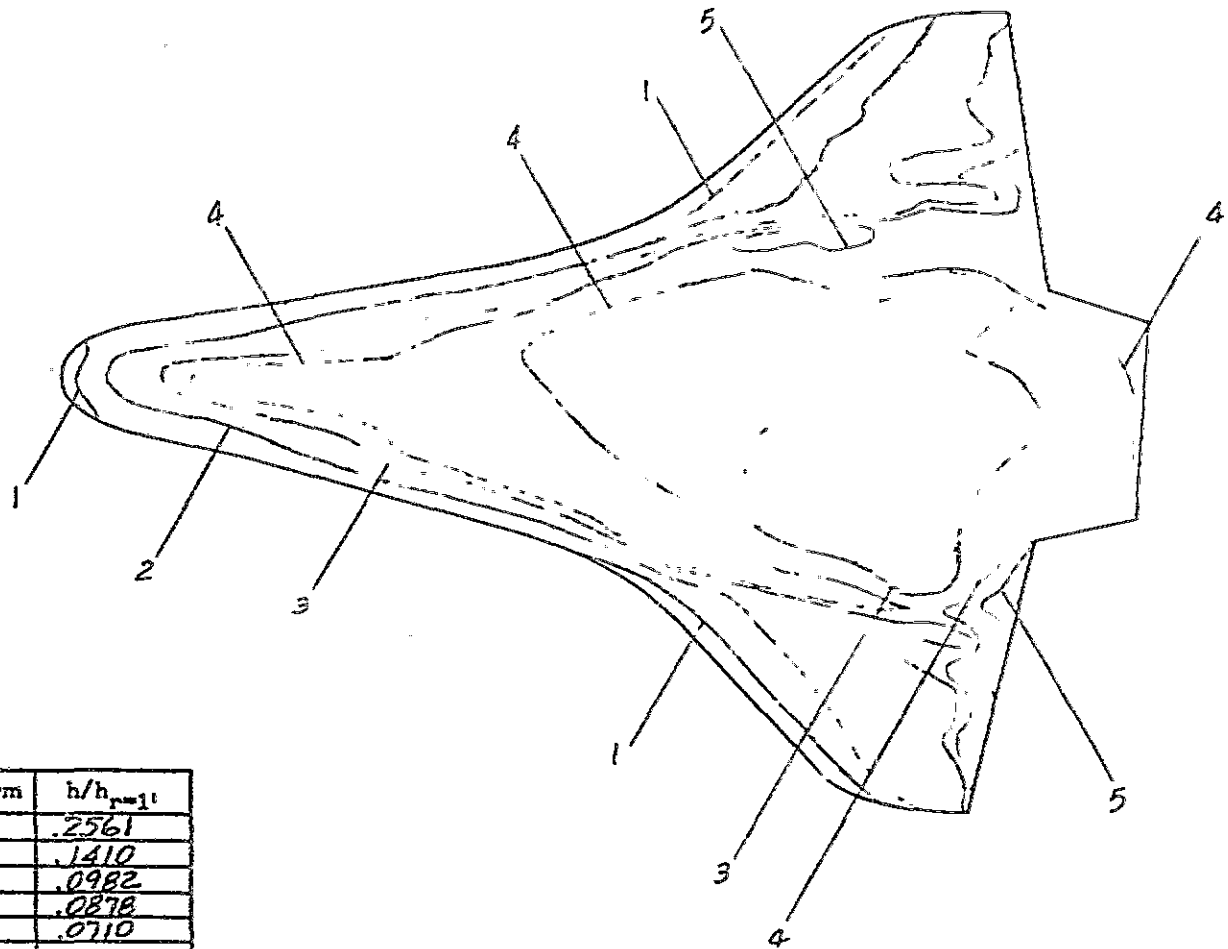

Isotherm	$h/h_{r=1'}$
1	.2561
2	.1410
3	.0982
4	.0878
5	.0710
6	
7	
8	
9	
10	

PAGE 34

FIGURE 11

CONFIG.

LENGTH (ft) =

SCALE .006

FACILITY LRC-VDT

TEST

RUN 4060

M_∞ =

P_{total} (psia) = 640

T_{total} (°R) = 1365

T_{aw}/T_{total} = .91

R_N per foot =

$T_{phase\ change}$ (°F) = 300

α = 30

β = 0

ϕ = 180

Camera Coordinates (from model center, x-axis parallel w/ stream, + downstream)

x (in) =

y (in) =

z (in) =

PHASE CHANGE TEST

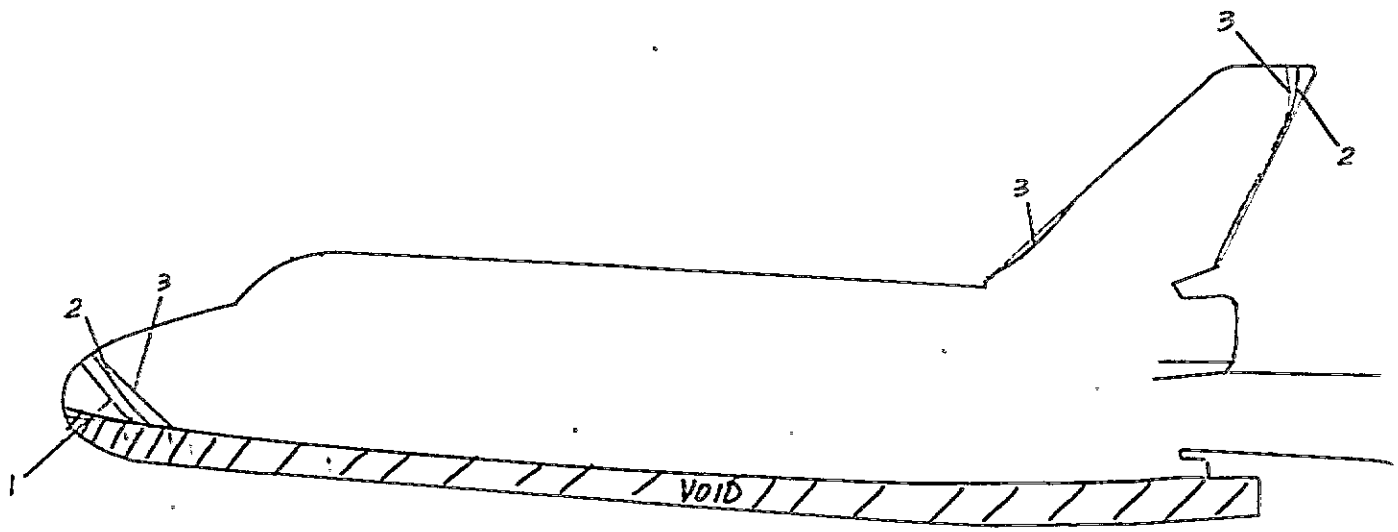

Isotherm	$h/h_{r=1'}$
1	.1122
2	.0816
3	.0756
4	
5	
6	
7	
8	
9	
10	

CONFIG.

LENGTH (ft) =

SCALE .006

FACILITY LRC-VDT

TEST

RUN 4060

M_∞ =

P_{total} (psia) = 640

T_{total} (°R) = 1365

T_{aw}/T_{total} = .90

R_N per foot =

$T_{phase\ change}$ (°F) = 300

α = 30

β = 0

ϕ = 180

Camera Coordinates (from model center, x-axis parallel w/ stream, + downstream)

x (in) =

y (in) =

z (in) =

PAGE 35

FIGURE 12

PHASE CHANGE TEST

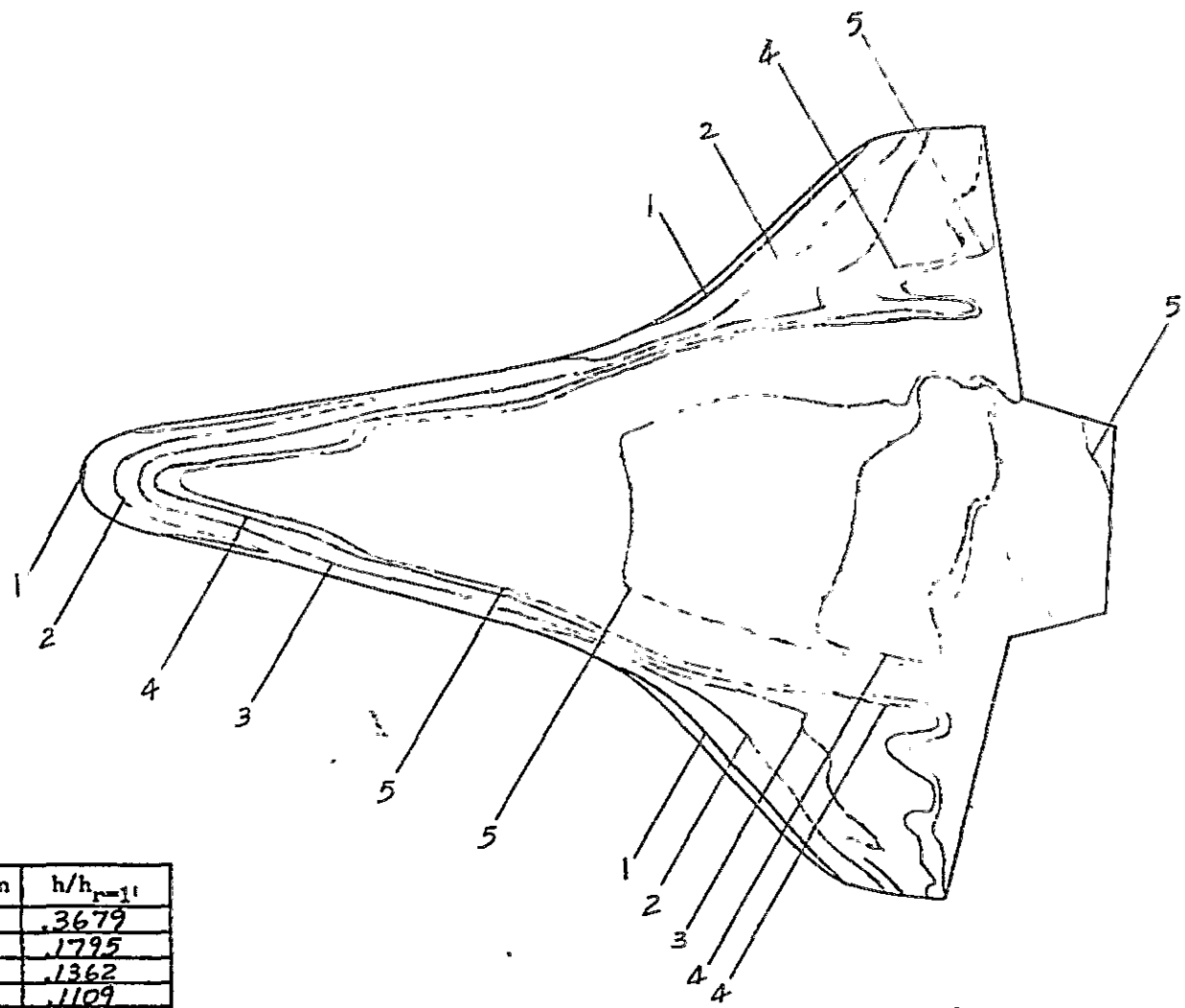

Isotherm	$h/h_{r=1}$
1	.3679
2	.1795
3	.1362
4	.1109
5	.1028
6	
7	
8	
9	
10	

PAGE 36

FIGURE 13

CONFIG.

LENGTH (ft) =

SCALE .006

FACILITY LRC-VDT

TEST

RUN 4061

M_∞ =

P_{total} (psia) = 645

T_{total} (°R) = 1335

T_{aw}/T_{total} = .91

R_N per foot =

$T_{phase\ change}$ (°F) = 350

α = 30

β = 0

ϕ = 180

Camera Coordinates (from model center, x-axis parallel w/ stream, + downstream)

x (in) =

y (in) =

z (in) =

NASA Langley (Feb. 1971)

EVD-EV.S

PHASE CHANGE TEST

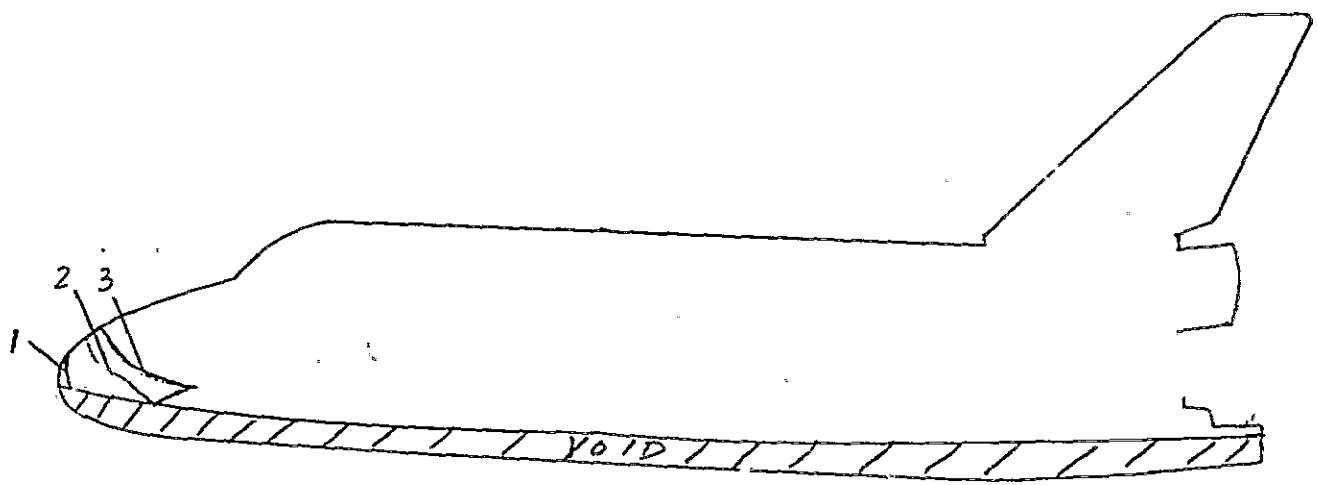

Isotherm	$h/h_{r=1'}$
1	.2502
2	.1549
3	.1073
4	
5	
6	
7	
8	
9	
10	

PAGE 37

FIGURE 14

CONFIG.

LENGTH (ft) =

SCALE .006

FACILITY LRC-VDT

TEST

RUN 4061

M_∞ =

P_{total} (psia) = 645

T_{total} (°R) = 1335

T_{aw}/T_{total} = .90

R_N per foot =

$T_{phase\ change}$ (°F) = 350

α = 30

β = 0

ϕ = 180

Camera Coordinates (from model center, x-axis parallel w/ stream, + downstream)

x (in) =

y (in) =

z (in) =

PHASE CHANGE TEST

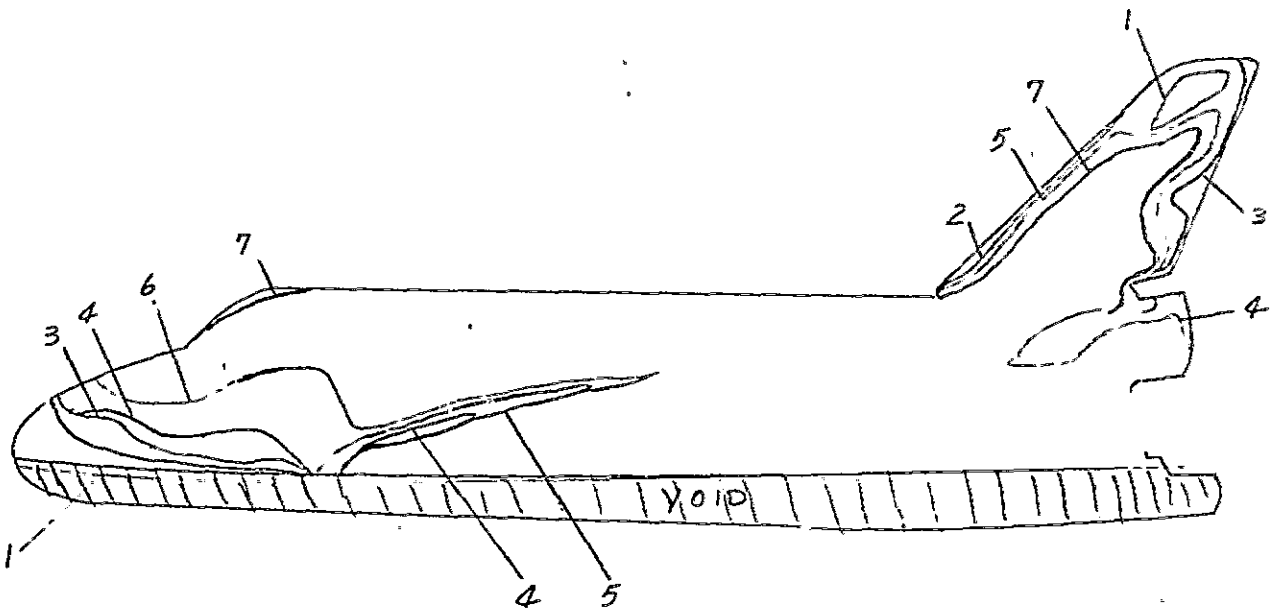

Isotherm	$h/h_{r=1'}$
1	.0659
2	.0478
3	.0409
4	.0338
5	.0267
6	.0222
7	.0204
8	
9	
10	

PAGE 38

FIGURE 15

CONFIG.

LENGTH (ft) =

SCALE .006

FACILITY LRC-VDT

TEST

RUN 4062

M_∞ =

P_{total} (psia) = 840

T_{total} (°R) = 1340

T_{aw}/T_{total} = .90

R_N per foot =

$T_{phase\ change}$ (°F) = 150

α = 30

β = 0

ϕ = 180

Camera Coordinates (from model center, x-axis parallel w/ stream, + downstream)

x (in) =

y (in) =

z (in) =

PHASE CHANGE TEST

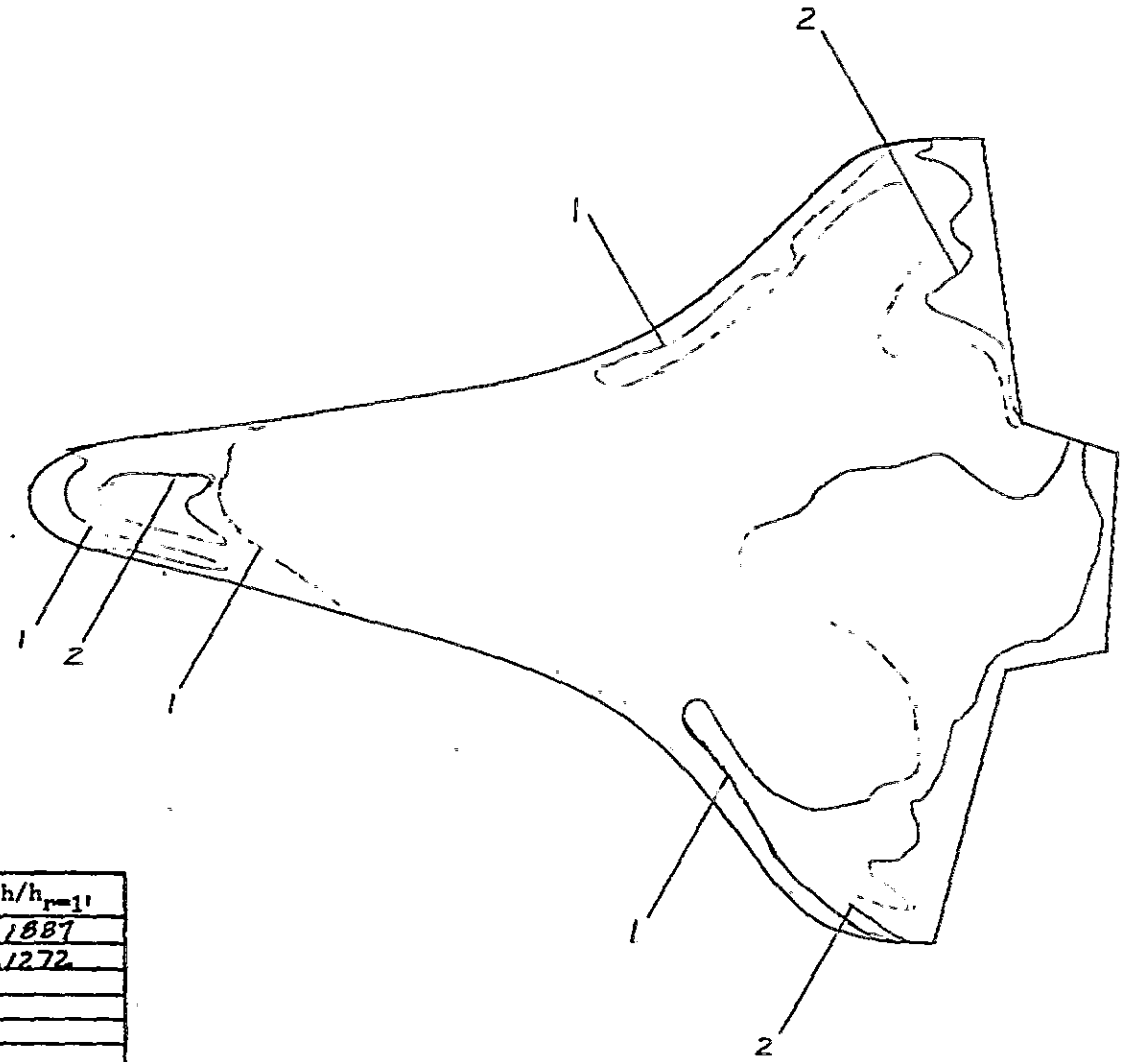

Isotherm	$h/h_{r=1'}$
1	.1887
2	.1272
3	
4	
5	
6	
7	
8	
9	
10	

PAGE 39
FIGURE 16

CONFIG.

LENGTH (ft) =

SCALE .006

FACILITY LRC-VDT

TEST

RUN 4063

M_∞ =

P_{total} (psia) = 640

T_{total} (°R) = 1340

T_{aw}/T_{total} = .91

R_N per foot =

$T_{phase\ change}$ (°F) = 250

α = 30

β = 0

ϕ = 180

Camera Coordinates (from model center, x-axis parallel w/ stream, + downstream)

x (in) =

y (in) =

z (in) =

PHASE CHANGE TEST

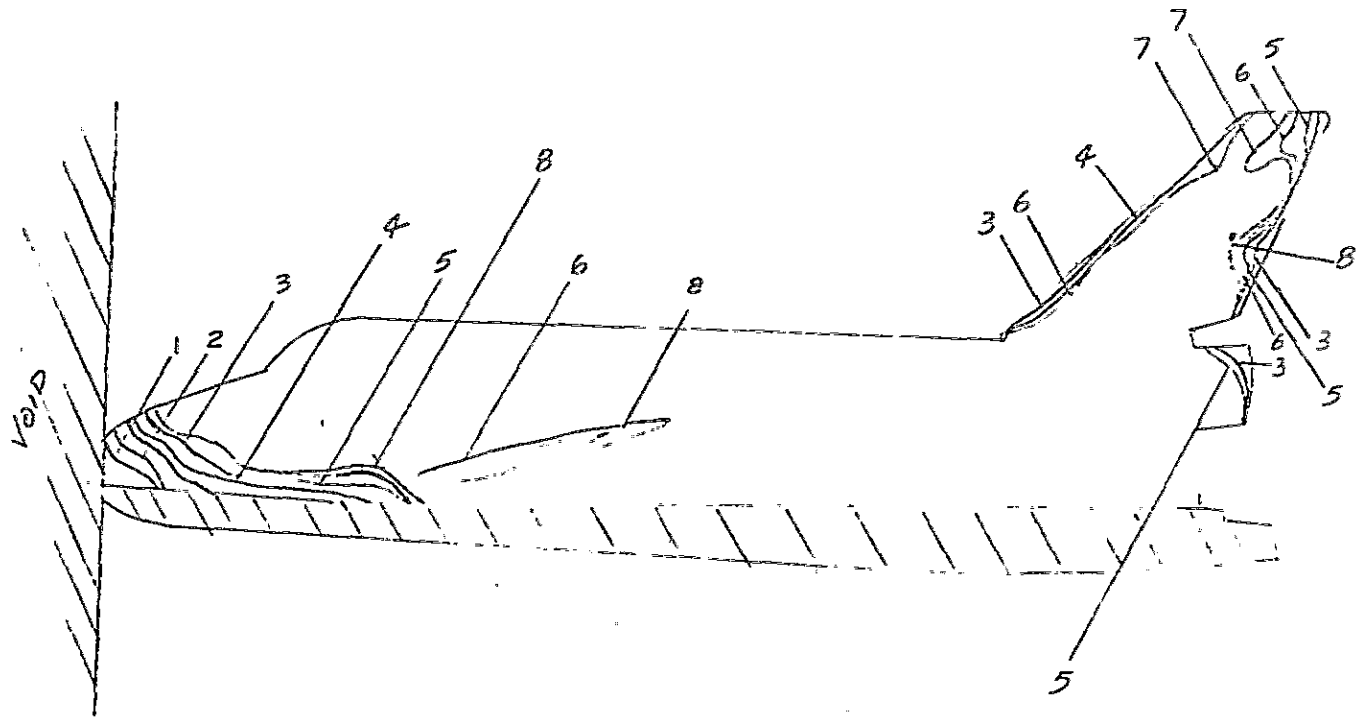

Isotherm	$h/h_{r=1'}$
1	.1766
2	.1276
3	.0892
4	.0825
5	.0702
6	.0645
7	.0589
8	.0571
9	
10	

PAGE 40

FIGURE 17

CONFIG.

LENGTH (ft) =

SCALE .006

FACILITY LRC-VDT

TEST

RUN 4063

M_∞ =

P_{total} (psia) = 640

T_{total} (°R) = 1340

T_{aw}/T_{total} = .90

R_N per foot =

$T_{phase\ change}$ (°F) = 250

α = 30

β = 0

ϕ = 180

Camera Coordinates (from model center, x-axis parallel w/ stream, + downstream)

x (in) =

y (in) =

z (in) =

PHASE CHANGE TEST

PAINT ON CENTER OF MODEL MELTED WHILE PASSING THROUGH B. L.

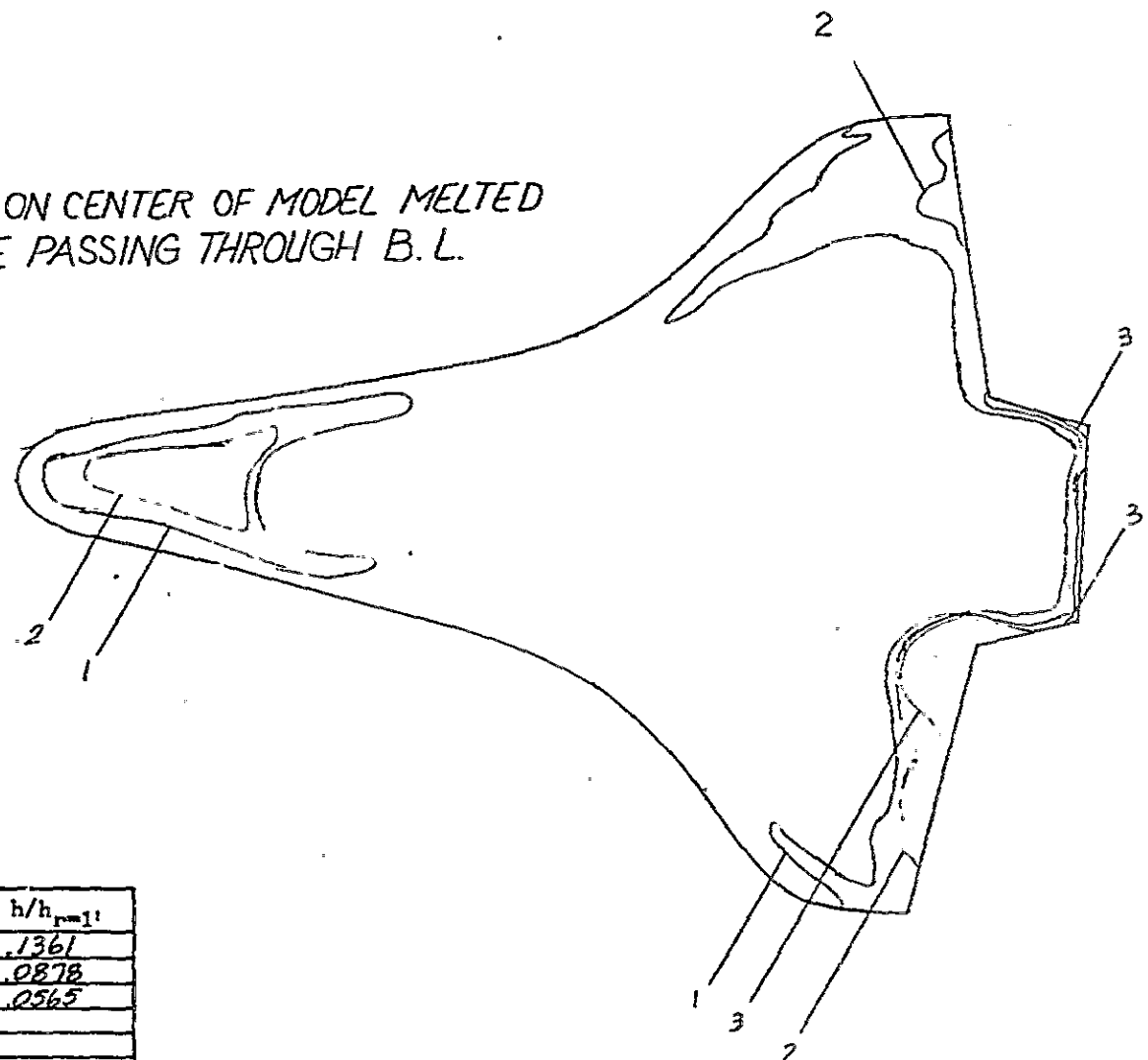

Isotherm	$h/h_{r=1}$
1	.1361
2	.0878
3	.0565
4	
5	
6	
7	
8	
9	
10	

PAGE 41

FIGURE 18

CONFIG.

LENGTH (ft) =

SCALE .006 -

FACILITY LRC-VDT

TEST

RUN 4064

M_∞ =

P_{total} (psia) = 180

T_{total} (°R) = 1235

T_{aw}/T_{total} = .91

R_N per foot =

$T_{phase\ change}$ (°F) = 150

α = 30

β = 0

ϕ = 180

Camera Coordinates (from model center, x-axis parallel w/ stream, + downstream)

x (in) =

y (in) =

z (in) =

PHASE CHANGE TEST

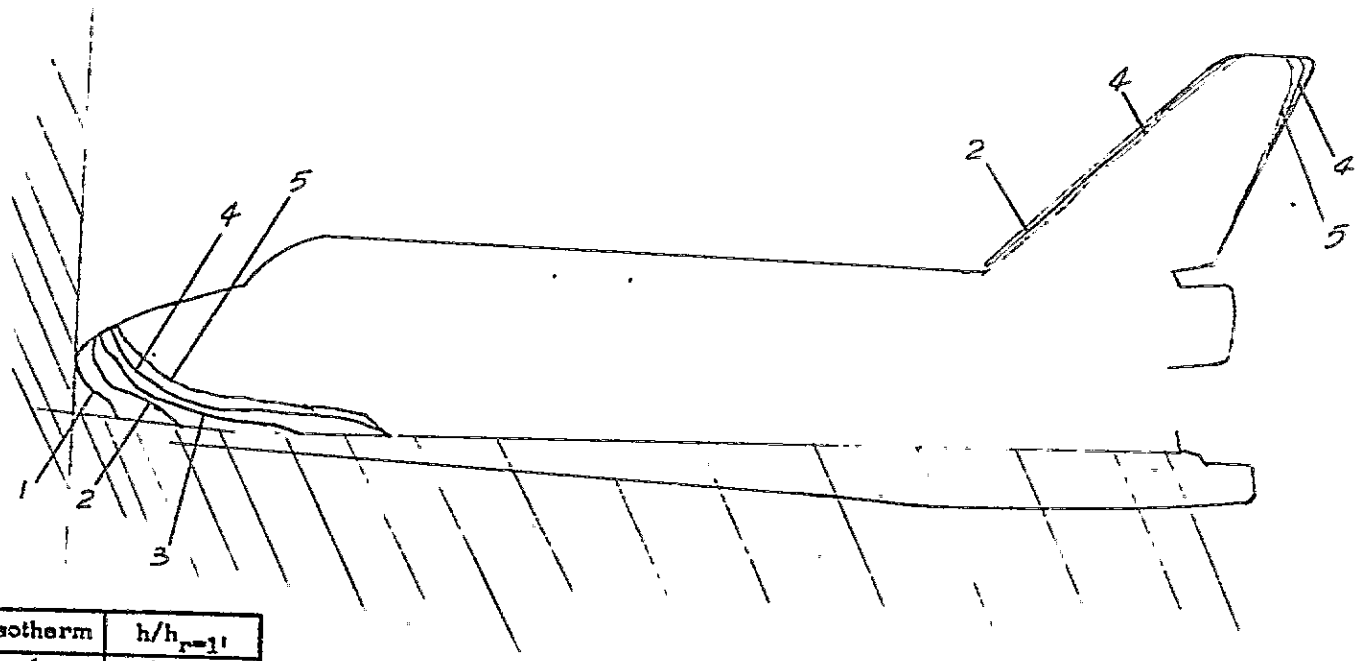

Isotherm	$h/h_{r=1}$
1	.1666
2	.1102
3	.0792
4	.0516
5	.0445
6	
7	
8	
9	
10	

PAGE 42

FIGURE 19

CONFIG.

LENGTH (ft) =

SCALE .006

FACILITY LRC-VDT

TEST

RUN 4064

M_∞ =

P_{total} (psia) = 180

T_{total} (°R) = 1235

T_{aw}/T_{total} = .90

R_N per foot =

$T_{phase\ change}$ (°F) = 150

α = 30

β = 0

ϕ = 180

Camera Coordinates (from model center, x-axis parallel w/ stream, + downstream)

x (in) =

y (in) =

z (in) =

PHASE CHANGE TEST

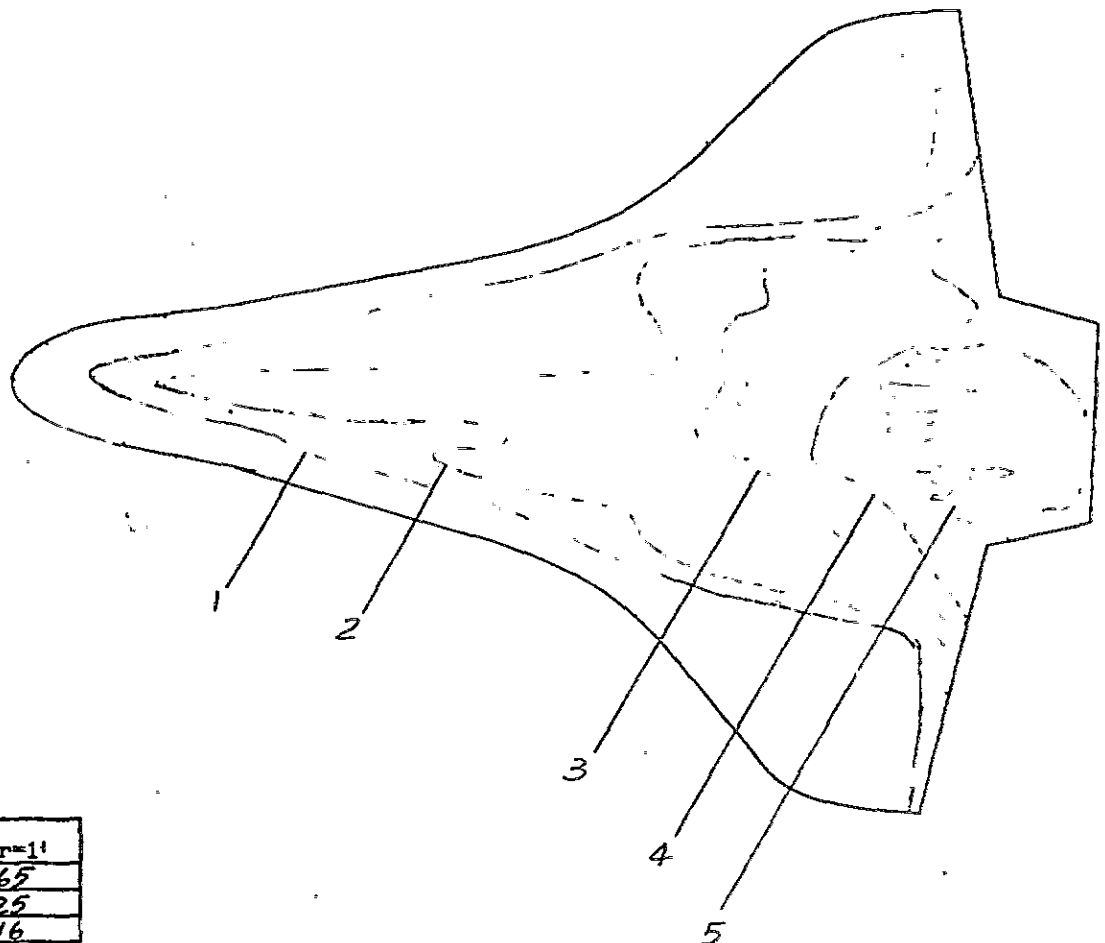

Isotherm	$h/h_{r=1'}$
1	.0765
2	.0625
3	.0516
4	.0428
5	.0349
6	
7	
8	
9	
10	

PAGE 43

FIGURE 20

CONFIG.

LENGTH (ft) =

SCALE .006

FACILITY LRC-VDT

TEST

RUN 4065

M_∞ =

P_{total} (psia) = 175

T_{total} (°R) = 1275

T_{aw}/T_{total} = .91

R_N per foot =

$T_{phase\ change}$ (°F) = 125

α = 30

β = 0

ϕ = 180

Camera Coordinates (from model center, x-axis parallel w/ stream, + downstream)

x (in) =

y (in) =

z (in) =

PHASE CHANGE TEST

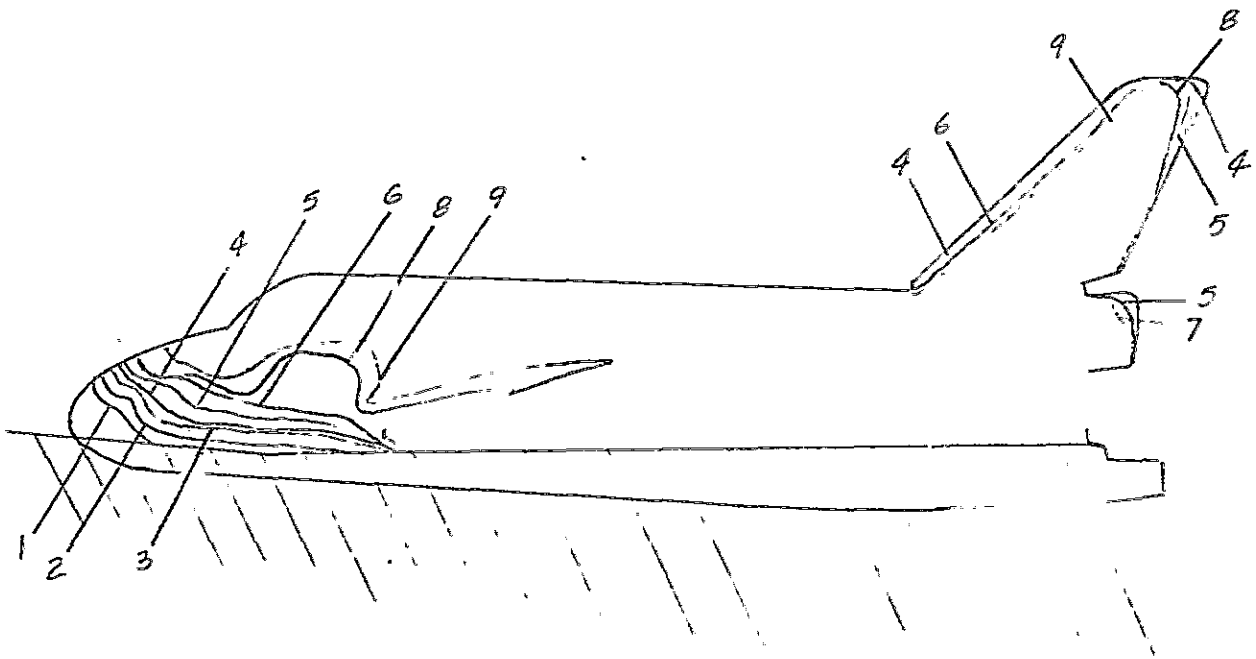

Isotherm	$h/h_{r=1}$
1	.0874
2	.0661
3	.0459
4	.0407
5	.0328
6	.0284
7	.0262
8	.0258
9	.0236
10	

PAGE 44

FIGURE 21

CONFIG.

LENGTH (ft) =

SCALE 006

FACILITY LRC-VDT

TEST

RUN 4065

M_∞ =

P_{total} (psia) = 175

T_{total} (°R) = 1275

T_{aw}/T_{total} = .90

R_N per foot =

$T_{phase\ change}$ (°F) = 125

α = 30

β = 0

ϕ = 180

Camera Coordinates (from model center, x-axis parallel w/ stream, + downstream)

x (in) =

y (in) =

z (in) =

PHASE CHANGE TEST

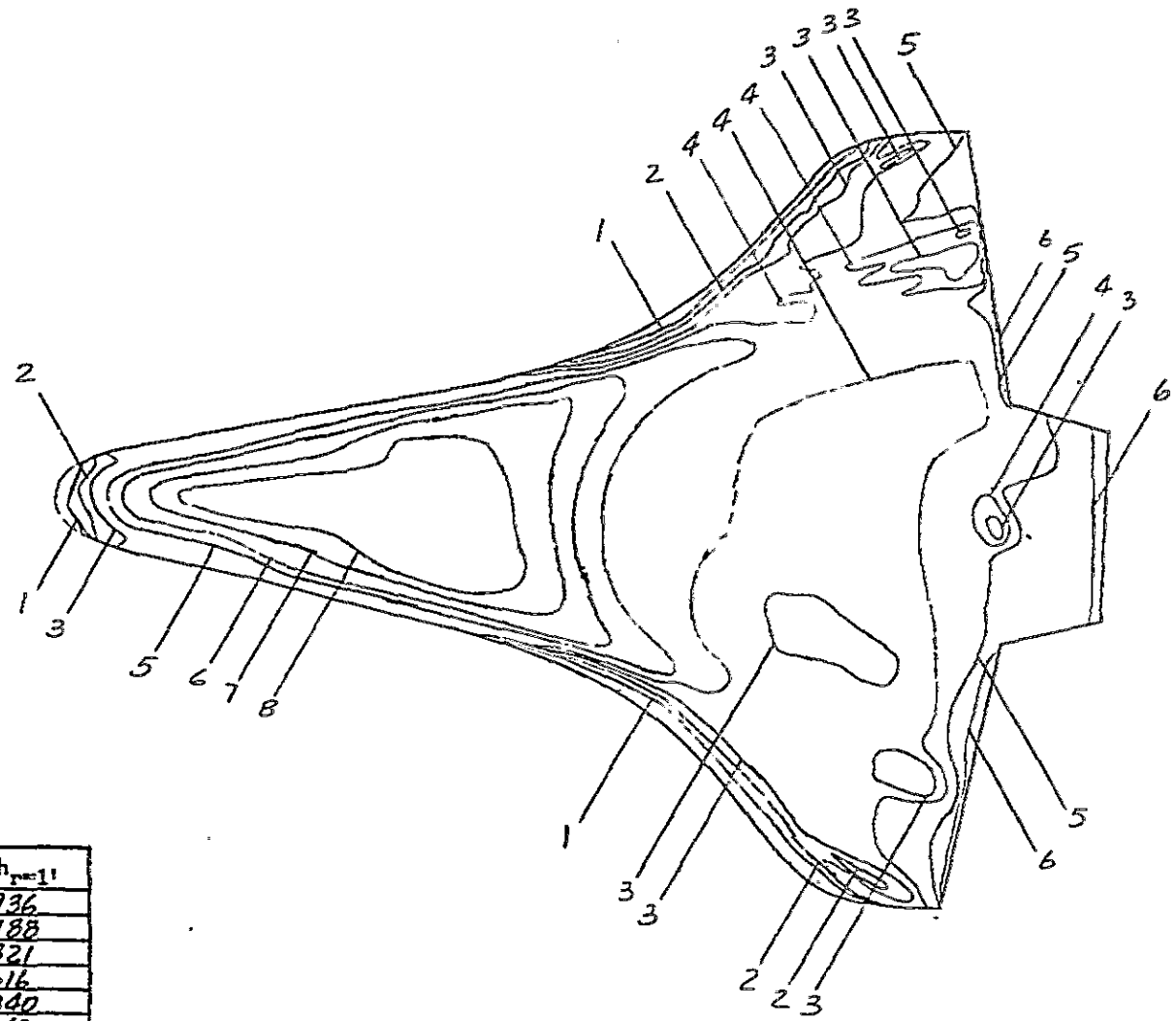

Isotherm	$h/h_{r=1'}$
1	.2936
2	.2188
3	.1821
4	.1616
5	.1340
6	.1143
7	.0943
8	.0821
9	
10	

PAGE 45

FIGURE 22

CONFIG.

LENGTH (ft) =

SCALE .006

FACILITY LRC-VDT

TEST

RUN 4066

M_∞ =

P_{total} (psia) = 1395

T_{total} (°R) = 1400

T_{aw}/T_{total} = .91

R_N per foot =

$T_{phase\ change}$ (°F) = 400

α = 30

β = 0

ϕ = 180

Camera Coordinates (from model center, x-axis parallel w/ stream, + downstream)

x (in) =

y (in) =

z (in) =

PHASE CHANGE TEST

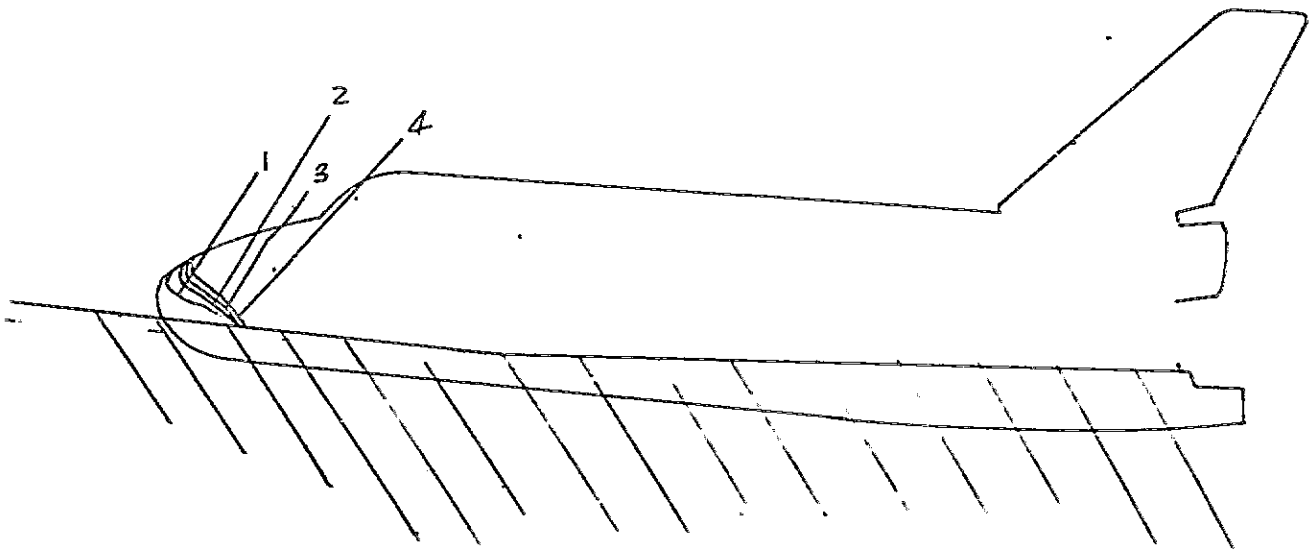

Isotherm	$h/h_{r=1'}$
1	.1844
2	.1304
3	.1078
4	.0918
5	
6	
7	
8	
9	
10	

PAGE. 46
FIGURE 23

CONFIG.

LENGTH (ft) =

SCALE .006

FACILITY LRC-VDT

TEST

RUN 4066

M_∞ =

P_{total} (psia) = 1395

T_{total} (°R) = 1400

T_{aw}/T_{total} = .90

R_N per foot =

$T_{phase\ change}$ (°F) = 400

α = 30

β = 0

ϕ = 180

Camera Coordinates (from model center, x-axis parallel w/ stream, + downstream)

x (in) =

y (in) =

z (in) =

EVD-EVCS

PHASE CHANGE TEST

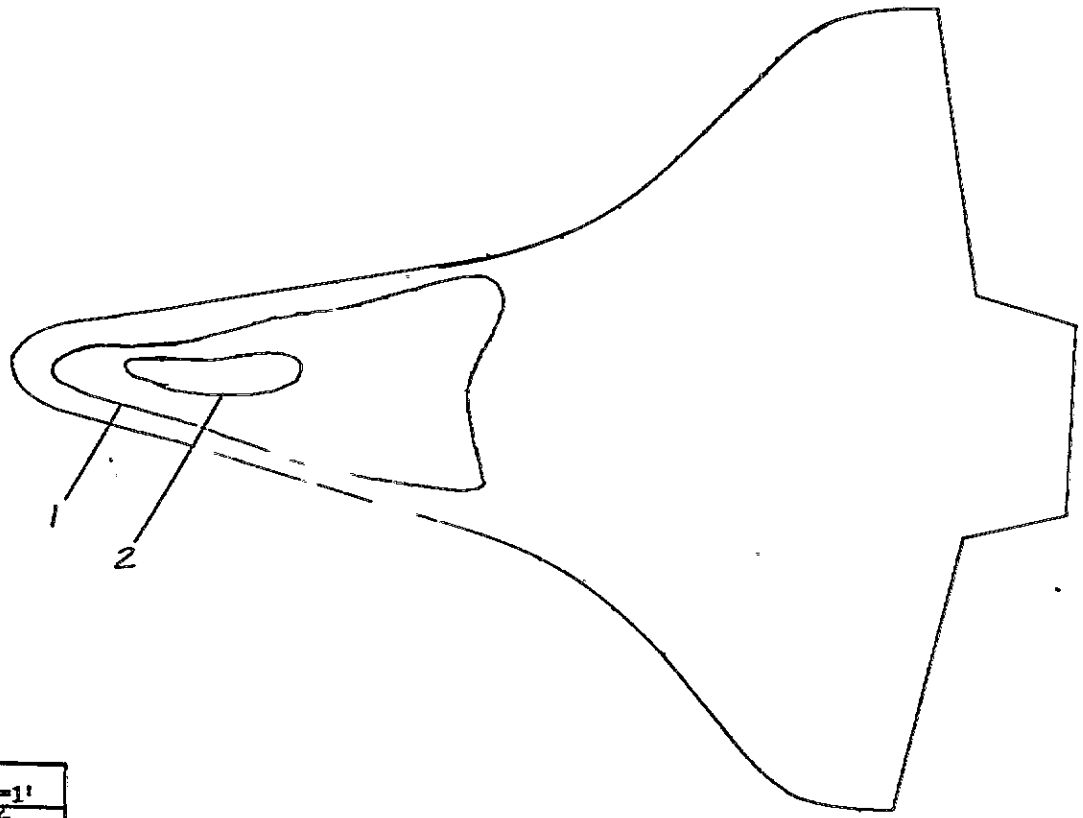

Isotherm	$h/h_{r=1}$*
1	.1106
2	.0848
3	
4	
5	
6	
7	
8	
9	
10	

*NASA Langley (Feb. 1971)

PAGE 47
FIGURE 24

CONFIG.

LENGTH (ft) =

SCALE .006

FACILITY LRC-VDT

TEST

RUN 4067

M_∞ =

P_{total} (psia) = 1395

T_{total} (°R) = 1430

T_{aw}/T_{total} = .91

R_N per foot =

$T_{phase\ change}$ (°F) = 250

α = 30

β = 0

ϕ = 180

Camera Coordinates (from model center, x-axis parallel w/ stream, + downstream)

x (in) =

y (in) =

z (in) =

HVD-EVCS

PHASE CHANGE TEST

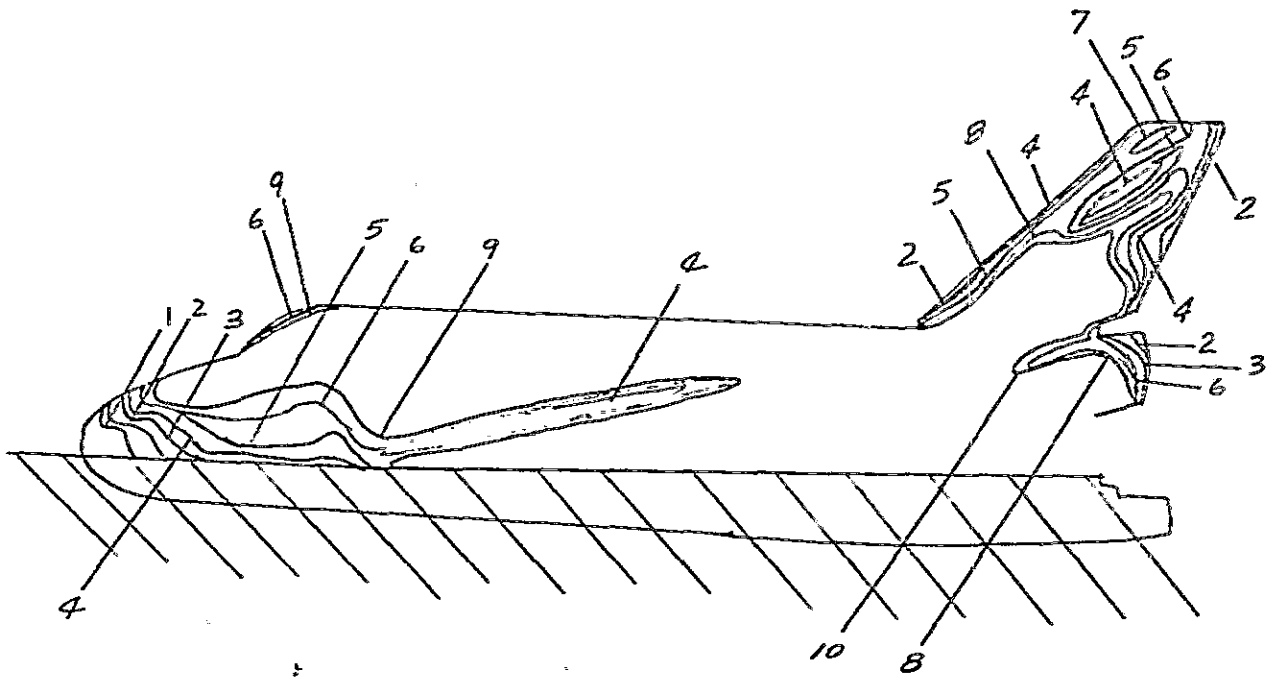

Isotherm	$h/h_{r=1'}$
1	.1266
2	.0821
3	.0633
4	.0546
5	.0474
6	.0437
7	.0411
8	.0385
9	.0369
10	.0349

PAGE 48
FIGURE 25

CONFIG.

LENGTH (ft) =

SCALE .006

FACILITY LRC-VDT

TEST

RUN 4067

M_∞ =

P_{total} (psia) = 1395

T_{total} (°R) = 1430

T_{aw}/T_{total} = .90

R_N per foot =

$T_{phase\ change}$ (°F) = 250

α = 30

β = 0

ϕ = 180

Camera Coordinates (from model center, x-axis parallel w/ stream, + downstream)

x (in) =

y (in) =

z (in) =

PHASE CHANGE TEST

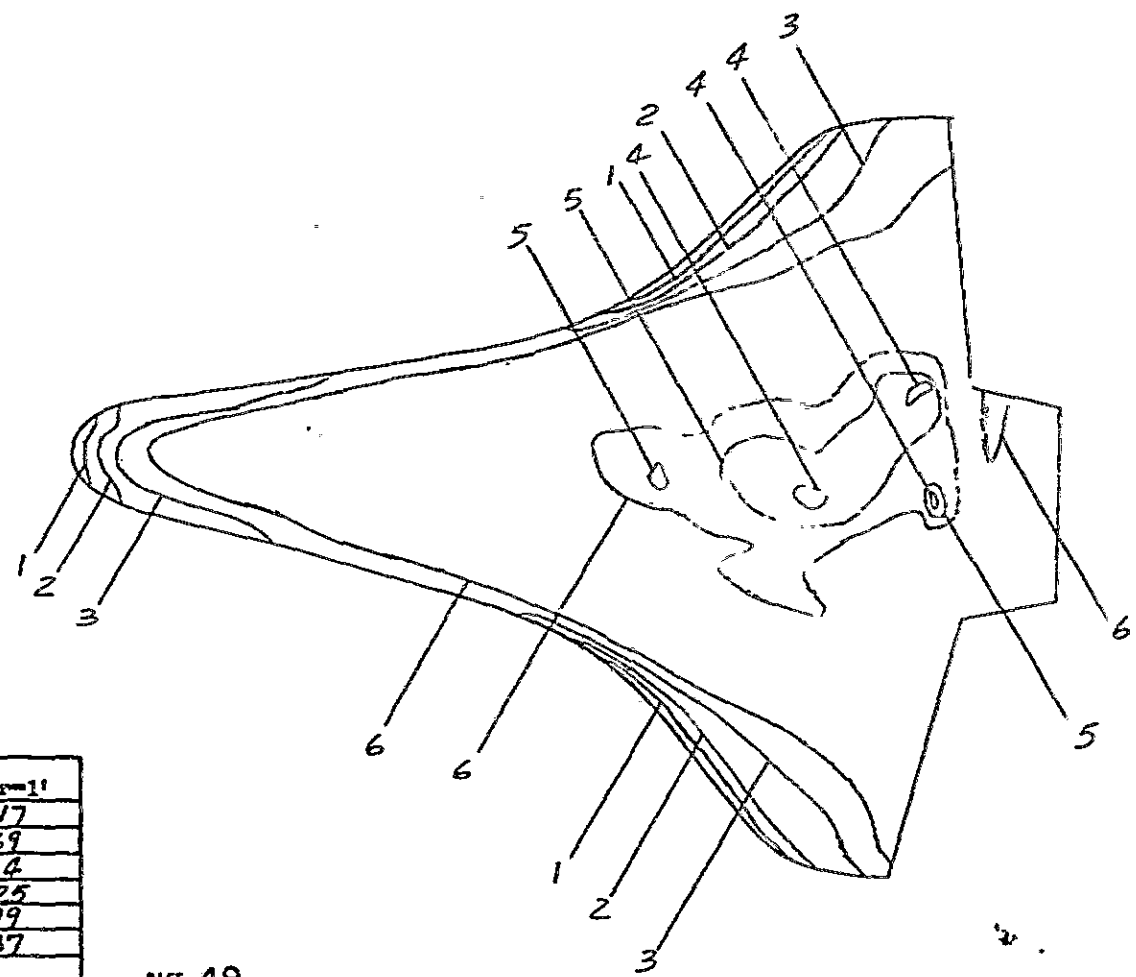

Isotherm	$h/h_{r=1'}$
1	.2817
2	.1969
3	.1434
4	.1225
5	.1199
6	.1137
7	
8	
9	
10	

PAGE 49
FIGURE 26

CONFIG.

LENGTH (ft) =

SCALE .006

FACILITY LRC-VDT

TEST

RUN 4070

M_∞ =

P_{total} (psia) = 650

T_{total} (°R) = 1375

T_{aw}/T_{total} = .932

R_N per foot =

$T_{phase\ change}$ (°F) = 400

α = 40

β = 0

ϕ = 180

Camera Coordinates (from model center, x-axis parallel w/ stream, + downstream)

x (in) =

y (in) =

z (in) =

PHASE CHANGE TEST

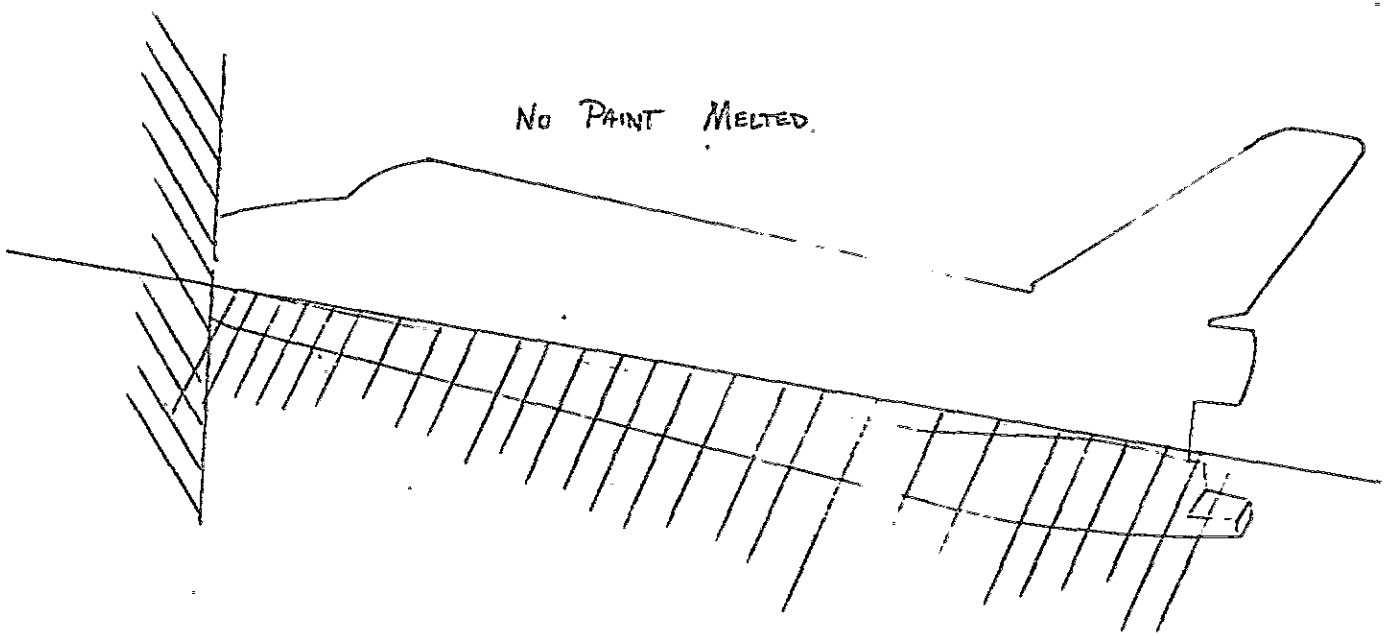

Isotherm	$h/h_{r=1'}$
1	
2	
3	
4	
5	
6	
7	
8	
9	
10	

PAGE 50
FIGURE 27

CONFIG.

LENGTH (ft) =

SCALE 006

FACILITY LRC-VDT

TEST

RUN 4070

M_∞ =

P_{total} (psia) = 650

T_{total} (°R) = 1375

T_{aw}/T_{total} =

R_N per foot =

$T_{phase\ change}$ (°F) = 400

α = 40

β = 0

ϕ = 180

Camera Coordinates (from model center, x-axis parallel w/ stream, + downstream)

x (in) =

y (in) =

z (in) =

PHASE CHANGE TEST

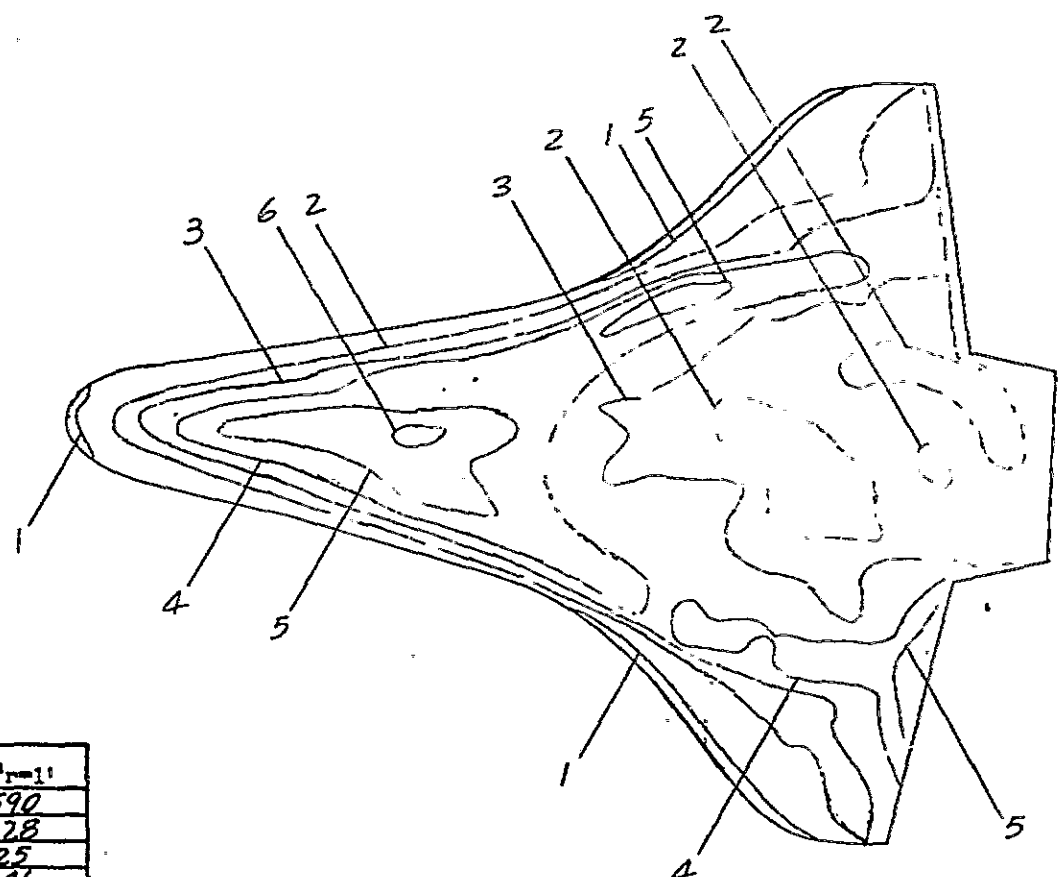

Isotherm	$h/h_{r=1'}$
1	.2590
2	.1328
3	.1125
4	.0946
5	.0840
6	.0754
7	
8	
9	
10	

PAGE 51

FIGURE 28

CONFIG.

LENGTH (ft) =

SCALE .006

FACILITY LRC-VDT

TEST

RUN 4071

M_∞ =

P_{total} (psia) = 625

T_{total} (°R) = 1325

T_{aw}/T_{total} = .932

R_N per foot =

$T_{phase\ change}$ (°F) = 300

α = 40

β = 0

ϕ = 180

Camera Coordinates (from model center, x-axis parallel w/ stream, + downstream)

x (in) =

y (in) =

z (in) =

PHASE CHANGE TEST

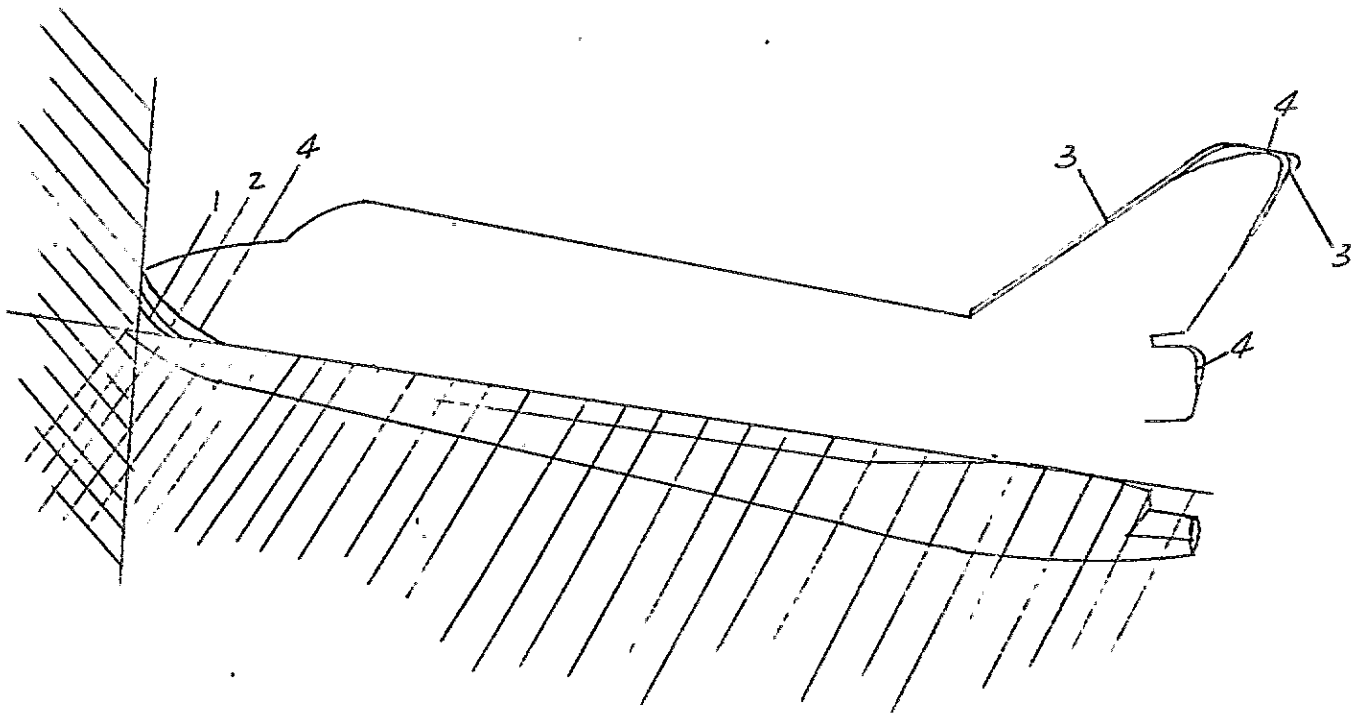

Isotherm	$h/h_{r=1'}$
1	.1363
2	.1144
3	.0937
4	.0816
5	
6	
7	
8	
9	
10	

PAGE 52
FIGURE 29

CONFIG.

LENGTH (ft) =

SCALE .006

FACILITY LRC-VDT

TEST

RUN 4071

M_∞ =

P_{total} (psia) = 625

T_{total} (°R) = 1325

T_{aw}/T_{total} = .90

R_N per foot =

$T_{phase\ change}$ (°F) = 300

α = 40

β = 0

ϕ = 180

Camera Coordinates (from model center, x-axis parallel w/ stream, + downstream)

x (in) =

y (in) =

z (in) =

HVD-EVCS

NASA Langley (Feb. 1971)

PHASE CHANGE TEST

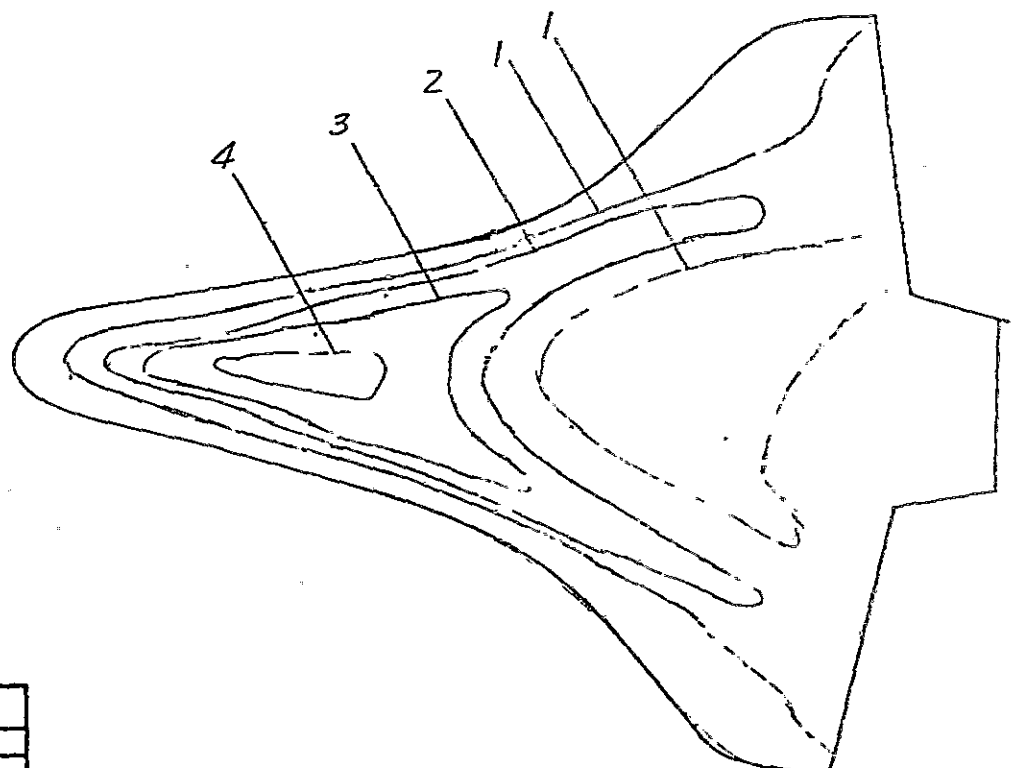

Isotherm	$h/h_{r=1'}$
1	.1072
2	.0838
3	.0776
4	.0697
5	
6	
7	
8	
9	
10	

PAGE 53

FIGURE 30

CONFIG.

LENGTH (ft) =

SCALE .006

FACILITY LRC-VDT

TEST

RUN 4072

M_∞ =

P_{total} (psia) = 640

T_{total} (°R) = 1335

T_{aw}/T_{total} = .932

R_N per foot =

$T_{phase\ change}$ (°F) = 200

α = 40

β = 0

ϕ = 180

Camera Coordinates (from model center, x-axis parallel w/ stream, + downstream)

x (in) =

y (in) =

z (in) =

PHASE CHANGE TEST

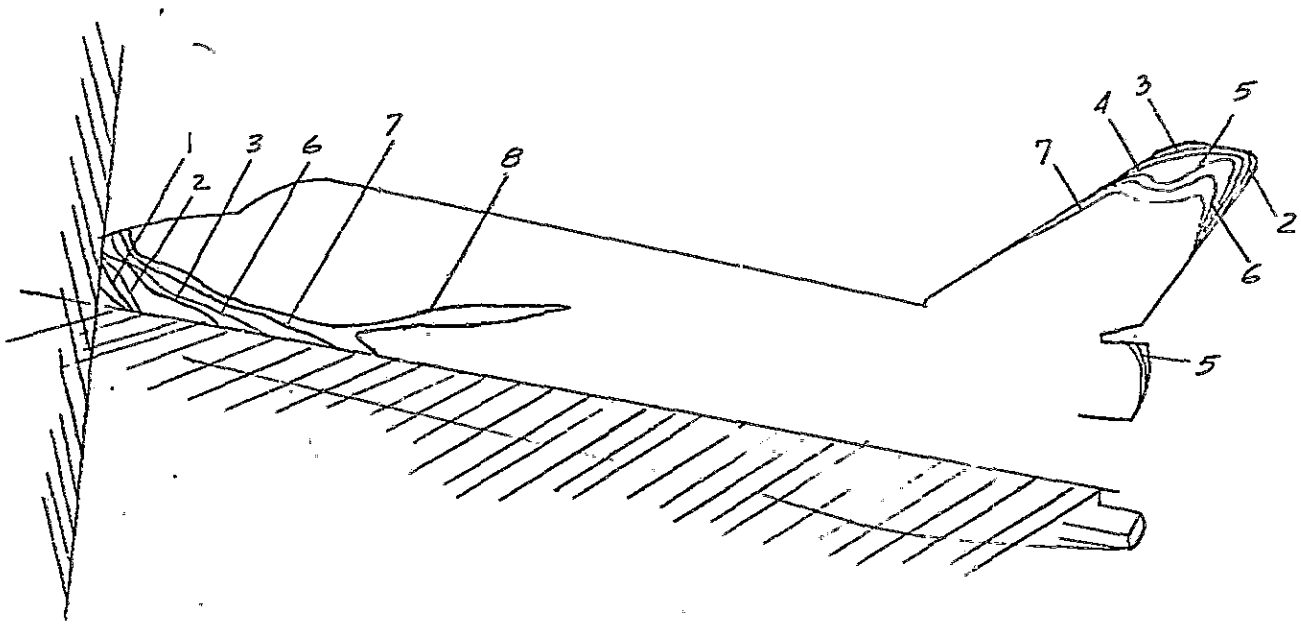

Isotherm	$h/h_{r=1'}$
1	.0815
2	.0656
3	.0612
4	.0530
5	.0451
6	.0403
7	.0355
8	.0339
9	
10	

PAGE 54

FIGURE 31

CONFIG.

LENGTH (ft) =

SCALE .006

FACILITY LRC-VDT

TEST

RUN 4072

M_∞ =

P_{total} (psia) = 640

T_{total} (°R) = 1335

T_{aw}/T_{total} = .90

R_N per foot =

$T_{phase\ change}$ (°F) = 200

α = 40

β = 0

ϕ = 180

Camera Coordinates (from model center, x-axis parallel w/ stream, + downstream)

x (in) =

y (in) =

z (in) =

PHASE CHANGE TEST

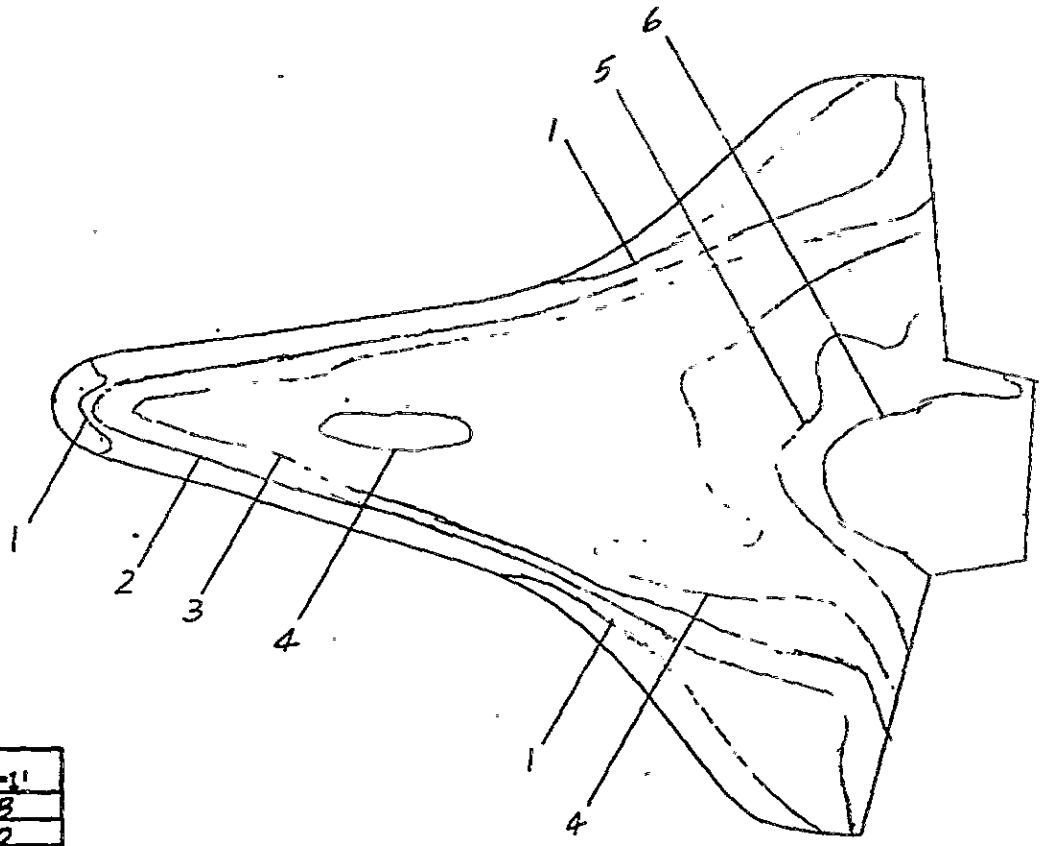

Isotherm	$h/h_{r=1'}$
1	.1328
2	.1050
3	.0780
4	.0612
5	.0538
6	.0485
7	
8	
9	
10	

PAGE 55

FIGURE 32

CONFIG.

LENGTH (ft) =

SCALE .006

FACILITY LRC-VDT

TEST

RUN 4073

M_∞ =

P_{total} (psia) = 165

T_{total} (°R) = 1235

T_{aw}/T_{total} = .932

R_N per foot =

$T_{phase\ change}$ (°F) = 150

α = 40

β = 0

ϕ = 180

Camera Coordinates (from model center, x-axis parallel w/ stream, + downstream)

x (in) =

y (in) =

z (in) =

HVD-EVCS

PHASE CHANGE TEST

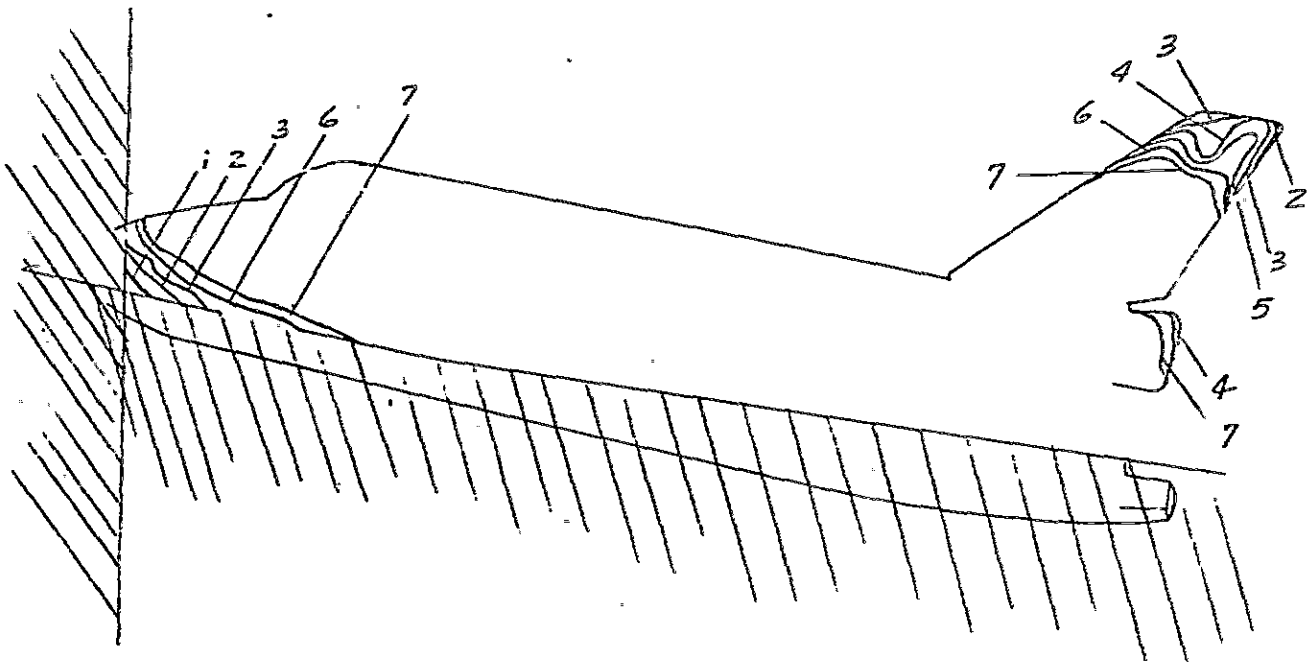

Isotherm	$h/h_{r=1'}$
1	.0887
2	.0682
3	.0565
4	.0499
5	.0445
6	.0425
7	.0363
8	
9	
10	

PAGE 56

FIGURE 33

CONFIG.

LENGTH (ft) =

SCALE .006

FACILITY LRC-VDT

TEST

RUN 4073

M_∞ =

P_{total} (psia) = 165

T_{total} (°R) = 1235

T_{aw}/T_{total} = .90

R_N per foot =

$T_{phase\ change}$ (°F) = 150

α = 40

β = 0

ϕ = 180

Camera Coordinates (from model center, x-axis parallel w/ stream, + downstream)

x (in) =

y (in) =

z (in) =

PHASE CHANGE TEST

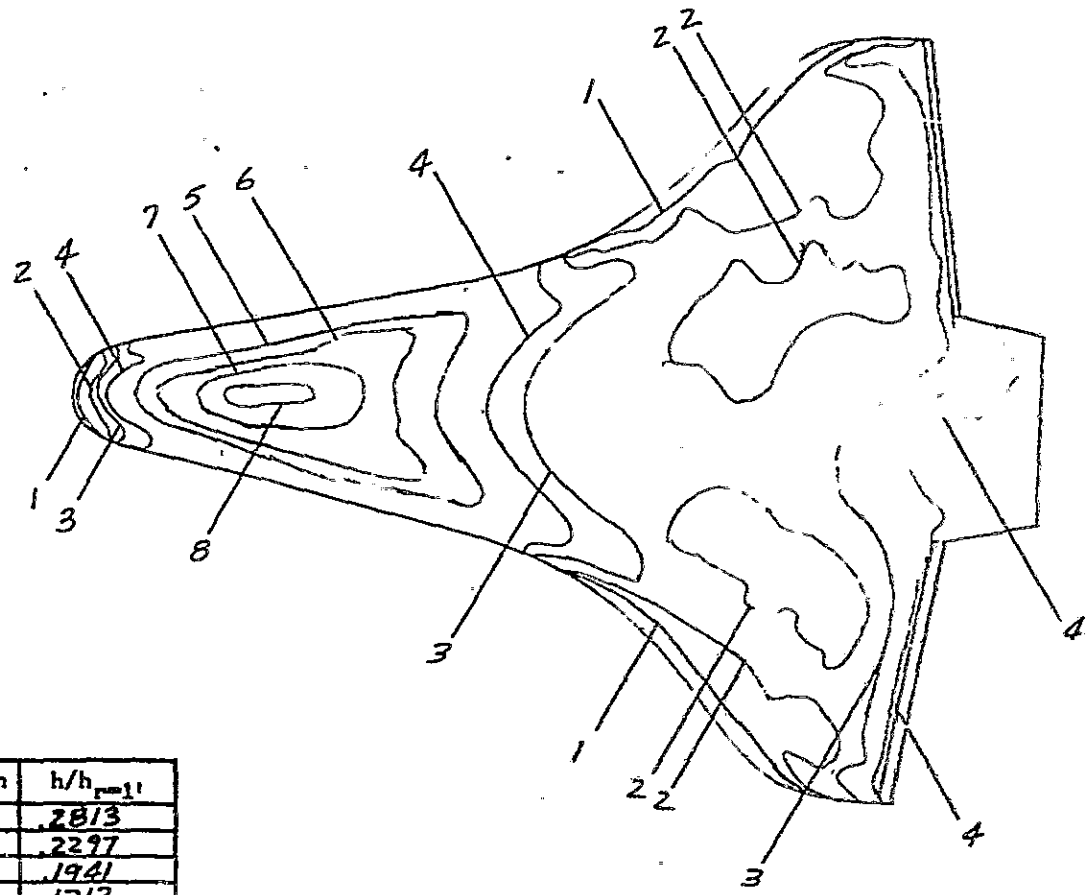

Isotherm	$h/h_{r=1'}$
1	.2813
2	.2297
3	.1941
4	.1712
5	.1326
6	.1130
7	.0982
8	.0894
9	
10	

PAGE 57

FIGURE 34

CONFIG.

LENGTH (ft) =

SCALE .006

FACILITY LRC-VDT

TEST

RUN 4074

M_∞ =

P_{total} (psia) = 1400

T_{total} (°R) = 1385

T_{aw}/T_{total} = .932

R_N per foot =

$T_{phase\ change}$ (°F) = 400

α = 40

β = 0

ϕ = 180

Camera Coordinates (from model center, x-axis parallel w/ stream, + downstream)

x (in) =

y (in) =

z (in) =

PHASE CHANGE TEST

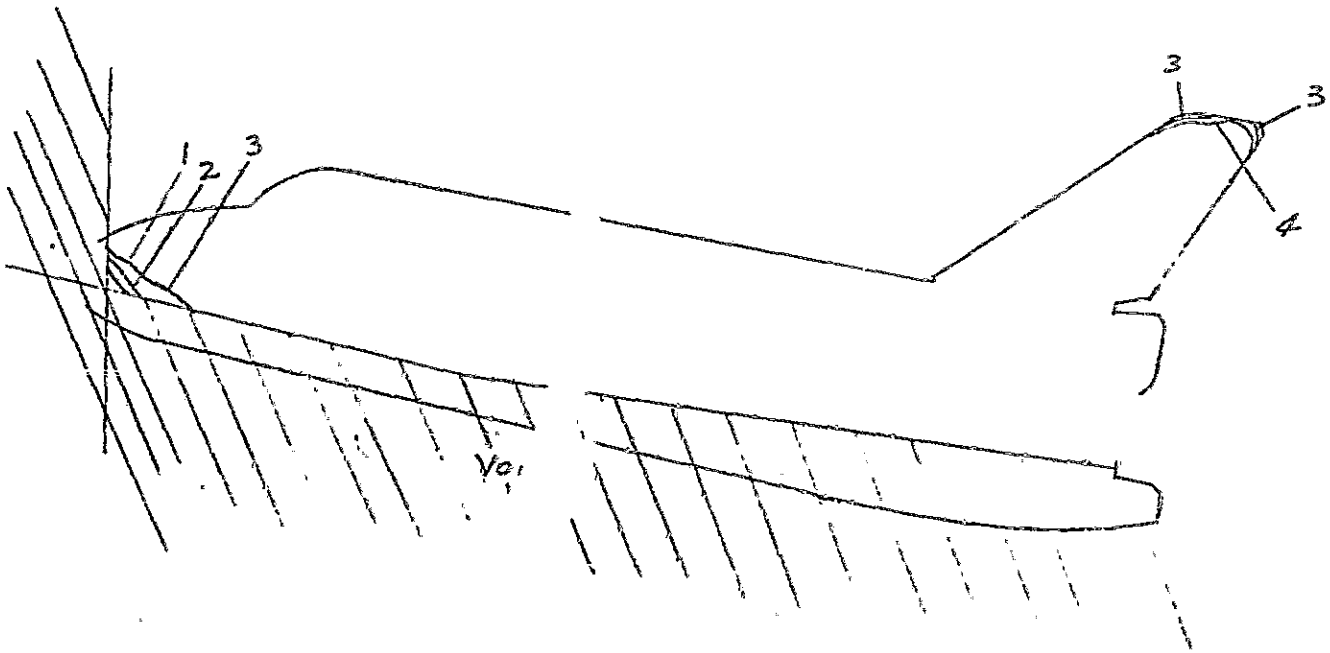

Isotherm	$h/h_{r=1}$
1	.1217
2	.1035
3	.0904
4	.0872
5	
6	
7	
8	
9	
10	

PAGE 58

FIGURE 35

CONFIG.

LENGTH (ft) =

SCALE .006

FACILITY LRC-VDT

TEST

RUN 4074

M_∞ =

P_{total} (psia) = 1400

T_{total} (°R) = 1385

T_{aw}/T_{total} = .90

R_N per foot =

$T_{phase\ change}$ (°F) = 400

α = 40

β = 0

ϕ = 180

Camera Coordinates (from model center, x-axis parallel w/ stream, + downstream)

x (in) =

y (in) =

z (in) =

PHASE CHANGE TEST

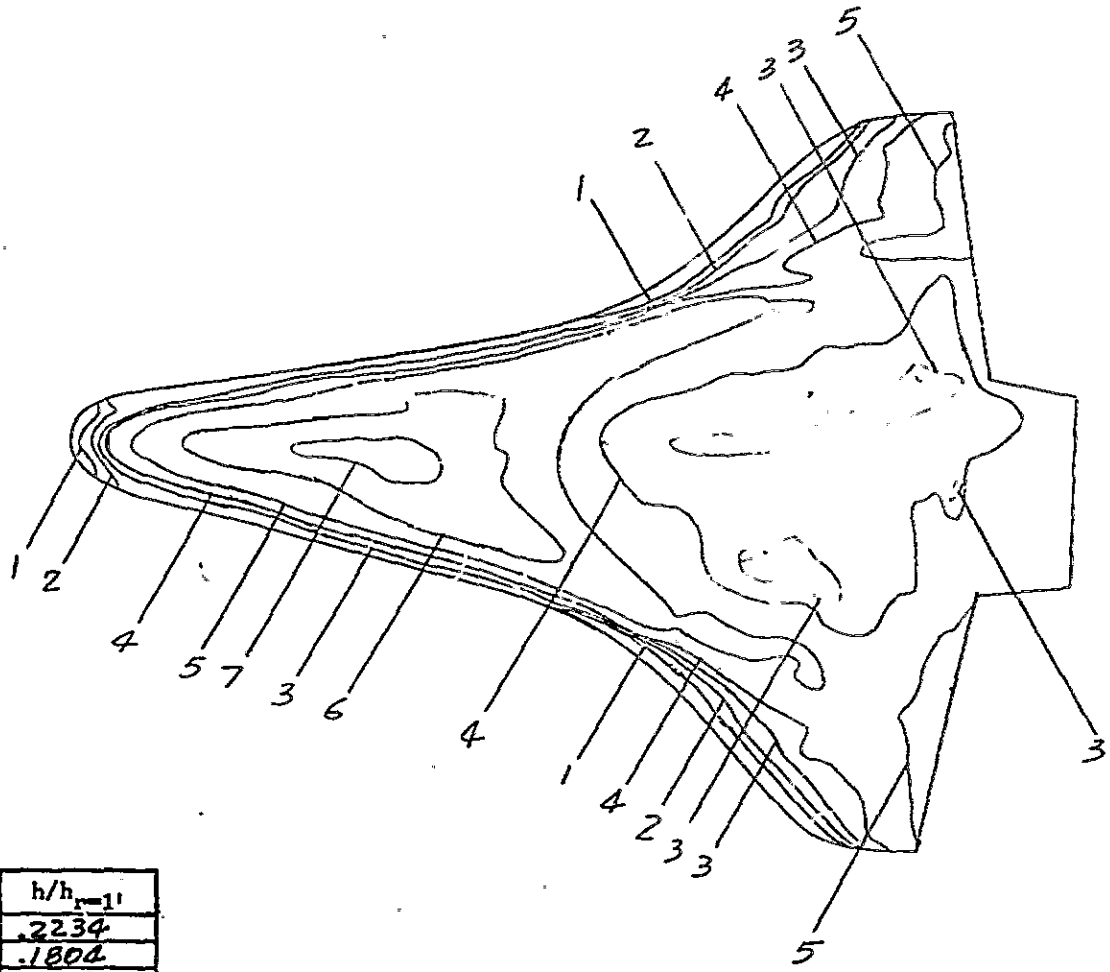

Isotherm	$h/h_{r=1}$
1	.2234
2	.1804
3	.1462
4	.1290
5	.1073
6	.0874
7	.0759
8	
9	
10	

PAGE 59

FIGURE 36

CONFIG.

LENGTH (ft) =

SCALE .006

FACILITY LRC-VDT

TEST

RUN 4076

M_∞ =

P_{total} (psia) = 640

T_{total} (°R) = 1310

T_{aw}/T_{total} = .92

R_N per foot =

$T_{phase\ change}$ (°F) ~300

α = 35

β = 0

ϕ = 180

Camera Coordinates (from model center, x-axis parallel w/ stream, + downstream)

x (in) =

y (in) =

z (in) =

PHASE CHANGE TEST

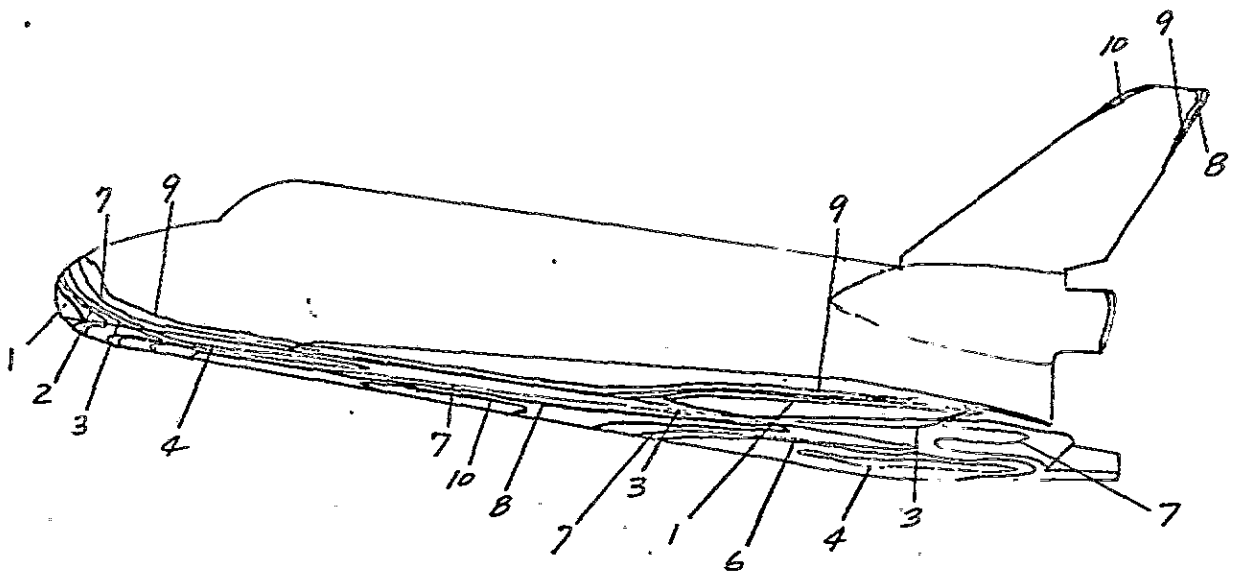

Isotherm	$h/h_{r=1}$
1	.2643
2	.2158
3	.1570
4	.1466
5	.1396
6	.1295
7	.1182
8	.1011
9	.0902
10	.0812

PAGE 60
FIGURE 37

CONFIG.

LENGTH (ft) =

SCALE .006

FACILITY LRC-VDT

TEST

RUN 4076

M_∞ =

P_{total} (psia) = 640

T_{total} (°R) = 1310

T_{aw}/T_{total} = .90

R_N per foot =

$T_{phase\ change}$ (°F) = 300

α = 35

β = 0

ϕ = 180

Camera Coordinates (from model center, x-axis parallel w/ stream, + downstream)

x (in) =

y (in) =

z (in) =

PHASE CHANGE TEST

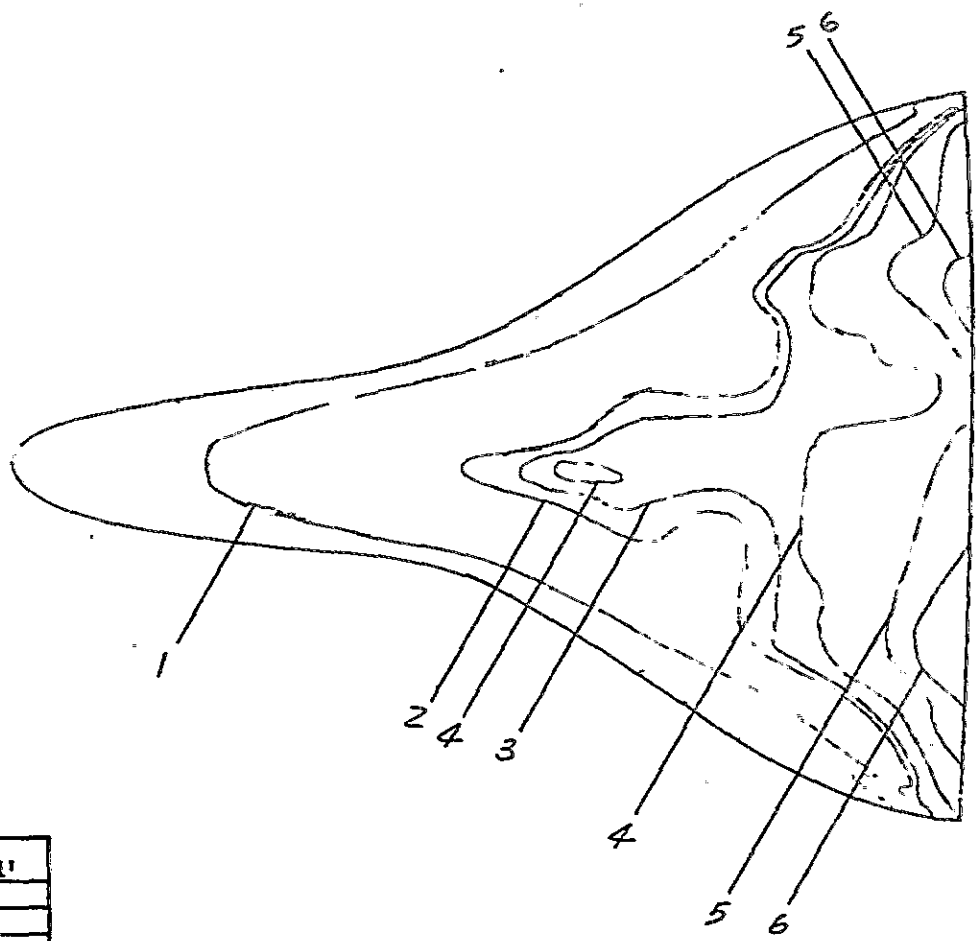

Isotherm	$h/h_{r=1'}$
1	.1613
2	.1141
3	.1087
4	.1041
5	.0806
6	.0688
7	
8	
9	
10	

PAGE 61

FIGURE 38

CONFIG.

LENGTH (ft) =

SCALE .006

FACILITY LRC-VDT

TEST

RUN 4077

M_∞ =

P_{total} (psia) = 1395

T_{total} (°R) = 1320

T_{aw}/T_{total} = .91

R_N per foot =

$T_{phase\ change}$ (°F) = 200

α = 30

β = 0

ϕ = 180

Camera Coordinates (from model center, x-axis parallel w/ stream, + downstream)

x (in) =

y (in) =

z (in) =

EVD-ETCS

PHASE CHANGE TEST

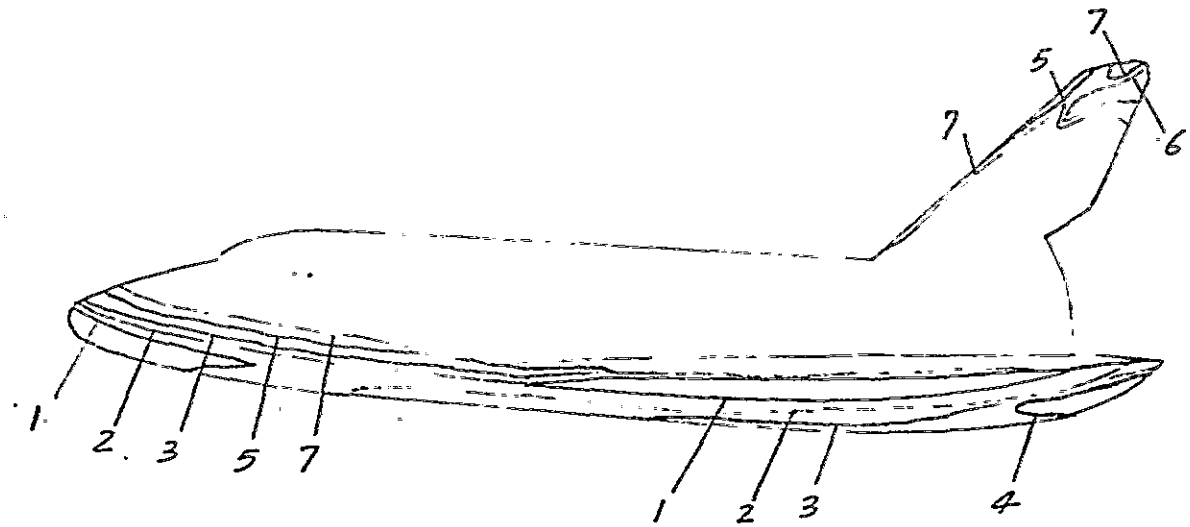

Isotherm	$h/h_{r=1'}$
1	.2132
2	.1508
3	.1114
4	.0896
5	.0708
6	.0638
7	.0551
8	
9	
10	

PAGE 62

FIGURE 39

CONFIG.

LENGTH (ft) =

SCALE .006

FACILITY LRC-VDT

TEST

RUN 4077

M_∞ =

P_{total} (psia) = 1395

T_{total} (°R) = 1320

T_{aw}/T_{total} = .90

R_N per foot =

$T_{phase\ change}$ (°F) = 200

α = 30

β = 0

ϕ = 180

Camera Coordinates (from model center, x-axis parallel w/ stream, + downstream)

x (in) =

y (in) =

z (in) =

PHASE CHANGE TEST

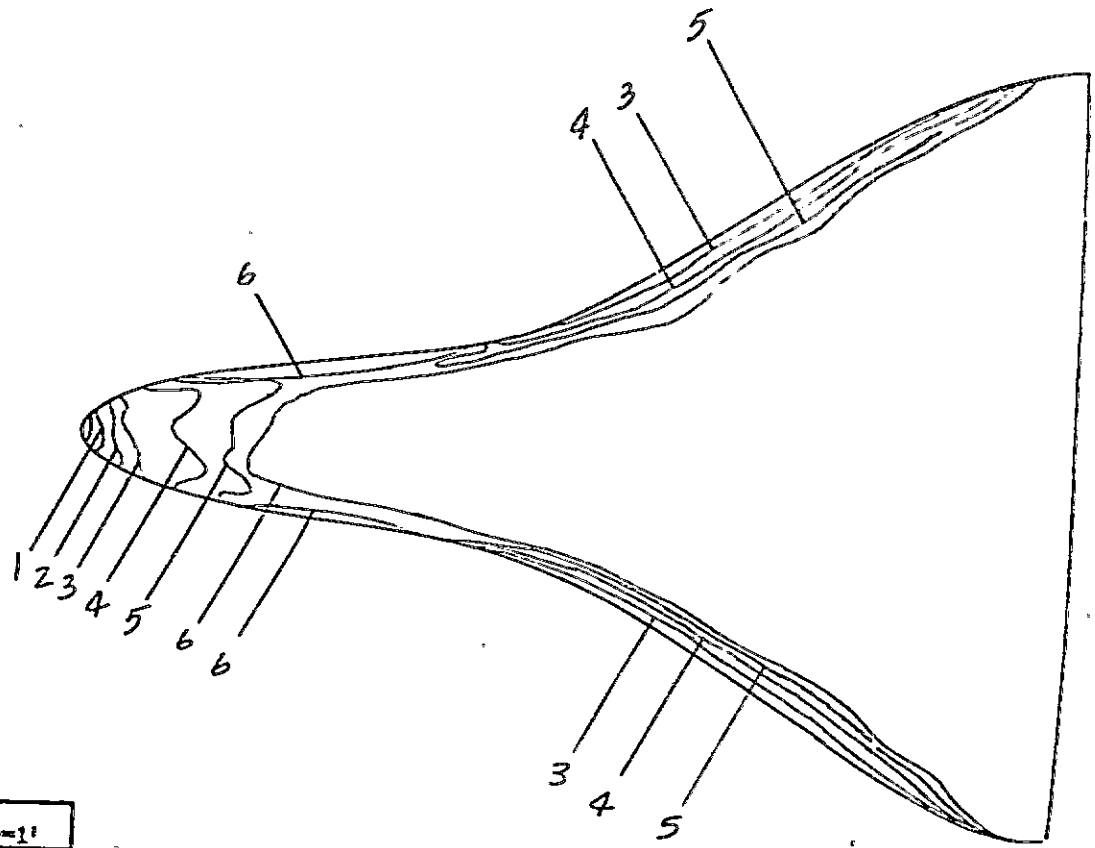

Isotherm	$h/h_{r=1'}$
1	.5115
2	.3711
3	.3172
4	.2335
5	.1947
6	.1714
7	
8	
9	
10	

PAGE 63

FIGURE 40

CONFIG.

LENGTH (ft) =

SCALE 006

FACILITY LRC-VDT

TEST

RUN 4078

M_∞ =

P_{total} (psia) = 1940

T_{total} (°R) = 1340

T_{aw}/T_{total} = .91

R_N per foot =

$T_{phase\ change}$ (°F) = 400

α = 30

β = 0

ϕ = 180

Camera Coordinates (from model center, x-axis parallel w/ stream, + downstream)

x (in) =

y (in) =

z (in) =

PHASE CHANGE TEST

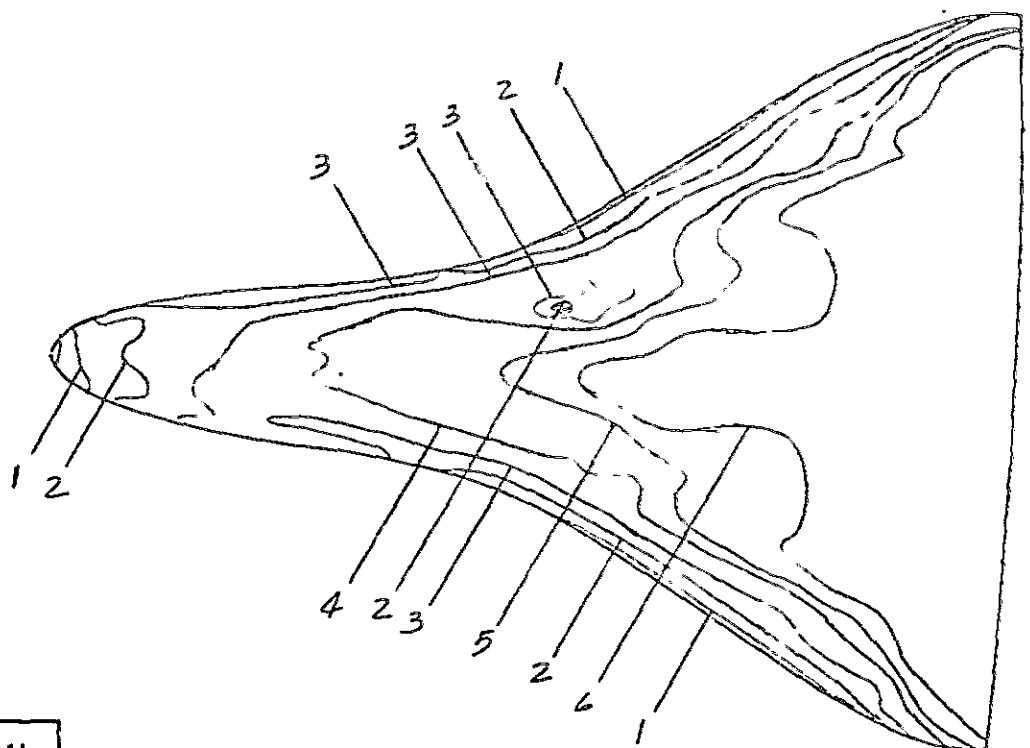

Isotherm	$h/h_{r=1}$
1	.3024
2	.2319
3	.1717
4	.1266
5	.1127
6	.0920
7	
8	
9	
10	

PAGE 64
FIGURE 41

CONFIG.

LENGTH (ft) =

SCALE .006

FACILITY LRC-VDT

TEST

RUN 4079

M_∞ =

P_{total} (psia) = 1395

T_{total} (°R) = 1400

T_{aw}/T_{total} = .91

R_N per foot =

$T_{phase\ change}$ (°F) = 300

α = 30

β = 0

ϕ = 180

Camera Coordinates (from model center, x-axis parallel w/ stream, + downstream)

x (in) =

y (in) =

z (in) =