NASA TECHNICAL MEMORANDUM

NASA TM X-2957

NASA TM X-2957

CASE FILE COPY

ADVANCED-POWER-REACTOR DESIGN CONCEPTS AND PERFORMANCE CHARACTERISTICS

by Harry W. Davison, Thomas A. Kirchgessner, Roy H. Springborn, and Howard G. Yacobucci

Lewis Research Center
Cleveland, Ohio 44135

NATIONAL AERONAUTICS AND SPACE ADMINISTRATION • WASHINGTON, D. C. • JANUARY 1974

1. Report No.	2. Government Accession No.	3. Recipient's Catalog No.
NASA TM X-2957		

4. Title and Subtitle	5. Report Date
ADVANCED-POWER-REACTOR DESIGN CONCEPTS AND PERFORMANCE CHARACTERISTICS	January 1974
	6. Performing Organization Code
7. Author(s) Harry W. Davison, Thomas A. Kirchgessner, Roy H. Springborn, and Howard G. Yacobucci	8. Performing Organization Report No. E-7614
9. Performing Organization Name and Address Lewis Research Center National Aeronautics and Space Administration Cleveland, Ohio 44135	10. Work Unit No. 503-25
	11. Contract or Grant No.
12. Sponsoring Agency Name and Address National Aeronautics and Space Administration Washington, D.C. 20546	13. Type of Report and Period Covered Technical Memorandum
	14. Sponsoring Agency Code

15. Supplementary Notes

16. Abstract

Five reactor cooling concepts which allow continued reactor operation following a single rupture of the coolant system are presented for application with the APR. These concepts incorporate convective cooling, double containment, or heat pipes to ensure operation after a coolant line rupture. Based on an evaluation of several control system concepts, a molybdenum-clad, beryllium oxide sliding reflector located outside the pressure vessel is recommended.

17. Key Words (Suggested by Author(s))	18. Distribution Statement
Nuclear reactor Space power Power reactor	Unclassified - unlimited

19. Security Classif. (of this report)	20. Security Classif. (of this page)	21. No. of Pages	22. Price*
Unclassified	Unclassified	21	Domestic, $2.75 Foreign, $5.25

* For sale by the National Technical Information Service, Springfield, Virginia 22151

ADVANCED-POWER-REACTOR DESIGN CONCEPTS AND PERFORMANCE CHARACTERISTICS

by Harry W. Davison, Thomas A. Kirchgessner,
Roy H. Springborn, and Howard G. Yacobucci

Lewis Research Center

SUMMARY

An Advanced Power Reactor (APR) which could provide thermal energy for either Brayton, Rankine, or thermoelectric power conversion systems has been under investigation at the Lewis Research Center. Two problem areas have been encountered with this reactor. A single-point failure in the primary coolant system would necessitate reactor shutdown and would result in some fuel melting. Also, there are potential development problems associated with the original reactor control concept.

Five reactor cooling concepts which would allow continued reactor operation following a single rupture of the coolant system are presented. These concepts incorporate either convective cooling of the fuel, double containment, or the use of arrays of heat pipes. One concept utilizes the original fuel element and support structure concept and has doubly contained pressure vessels which may be difficult to assemble. The heat-pipe-cooled concepts generally require more testing to evaluate their reliability and thermal effectiveness.

Several control methods were evaluated based on temperature, radiation stability, weight, and cost. A molybdenum-clad, beryllium oxide sliding reflector located outside the reactor pressure vessel is recommended.

INTRODUCTION

The Advanced Power Reactor is a fast-spectrum nuclear reactor designed for use with Brayton, Rankine, or thermoelectric space power conversion systems. One of the concepts is described in references 1 to 3 and is illustrated in figure 1. In this concept, uranium mononitride was selected as the primary fuel candidate because of its high melting point, uranium density, and thermal conductivity. The tantalum alloy T-111

(Ta-8W-2.4Hf) was selected as the primary clad and structural material because of its ductility and high-temperature creep strength. The reactor was designed to operate at 2-megawatt power for 50 000 hours with coolant outlet temperatures of approximately 1220 K. This reactor was cooled with liquid lithium and was controlled by rotating fueled drums contained inside the reactor pressure vessel. The primary problem area encountered with this concept concerns the consequence of a single-point failure in the primary coolant system. A loss-of-coolant accident would require complete reactor shutdown and result in some fuel melting (refs. 4 to 6). In addition to this, there were potential development problems associated with the high-temperature bearings and the nutating bellows seals of this system (fig. 1).

Several other reactor concepts have been investigated in order to avoid the problems encountered in the first APR concept. Early in 1973, however, the APR project was terminated as part of the NASA decision to terminate essentially all nuclear propulsion and power programs. The purpose of this memorandum is to summarize the conceptual designs investigated prior to the termination of the program.

The design goals for the reactor are reviewed, five reactor cooling concepts are discussed, and several reactor control methods are evaluated.

DESIGN GOALS

The first reactor concept, discussed in reference 1, had a design power level of 2 megawatts and an operating life of 50 000 hours. As indicated earlier, two major problem areas associated with this concept were (1) the consequences of a loss-of-coolant accident and (2) the problems associated with the severe environmental conditions imposed on the control drum bearings and the hermetic pressure vessel penetration requirement. Because of these problems and because of the cancellation of the deep-space missions for which this nuclear power concept appeared most attractive, other reactor control methods and cooling concepts were investigated.

The design goals for the APR concepts were high reliability, operating flexibility, safety, and competitive system cost and weight. However, the project was cancelled before detailed reliability, cost, and weight calculations could be made for any of the APR reactor concepts. A general goal associated with reactor reliability required continuous reactor operation following any single failure of a coolant line in the reactor system. This goal was established to avoid having to shut down the reactor following any single failure such as a loss of coolant due to a pipe or pressure vessel rupture. In some of the concepts considered, a reduction in reactor power was accepted to avoid damage to the system.

Operating flexibility was another design goal selected because of the lack of specific missions for the APR. For example, the reactor concept should be capable of operating with the Brayton, Rankine, thermoelectric power conversion systems with only minor modifications. Because of the lack of high-priority missions for a nuclear-powered system, both manned and unmanned missions requiring both 4π and shadow shielding were considered. The operating life goal (50 000 hr) used in the initial APR concept was also adopted for alternate concepts. Reactor power and coolant temperature goals for the three power conversion systems (PCS) are summarized in table I, assuming electric power requirements from 20 to 200 kilowatts. Reactivity requirements for the control concepts are discussed in reference 3.

Uranium mononitride was selected as the fuel material and T-111 was selected as the clad and structural material. The decisions governing the selection of these materials are discussed in reference 1. The choice of coolant for the various cooling concepts is discussed in the next section. The choice of materials selected for the various control concepts is discussed in the following section.

DISCUSSION OF REACTOR COOLING CONCEPTS

Five reactor cooling concepts have been investigated in an attempt to alleviate the problems associated with the loss-of-coolant accident while satisfying the other design goals discussed previously. The concepts discussed incorporate either forced convection cooling in the reactor core, multiple containment systems, or arrays of heat pipes. The concepts incorporating forced convection cooling utilize liquid lithium as the coolant because of its low vapor pressure and high thermal conductivity. The heat-pipe-cooled concepts utilize sodium rather than lithium because of the greater energy removal capability of the sodium-filled heat pipes at the temperatures of interest.

Forced Convection Cooling with Double-Containment Pressure Vessels

This concept, illustrated in figure 2, consists of an array of pin-type fuel elements cooled by liquid lithium as in the original APR concept. The reactor is cooled by liquid lithium supplied from two separate primary loop systems which must be isolated from each other with isolation valves. Double containment of the reactor core is provided by two concentric pressure vessels. The inner pressure vessel is supported by the outer pressure vessel through the use of a breech lock axial support. Concentricity is maintained by the vibration suppressor and centering ring. A rotational positioning bar is provided to prevent the inner pressure vessel from rotating relative to the outer pres-

sure vessel. Reactivity control is provided by axial motion of an axially moving reflector located at the periphery of the outer pressure vessel. Differential expansion between the inner and outer pressure vessels is accommodated by bellows expansion joints located at both ends of the reactor.

If a line rupture occurs in either of the primary loops, an isolation valve will close to prevent loss of coolant from the core. The reactor can then be cooled by the other primary loop system. The power conversion system attached to the failed loop would become inoperative. If either of the pressure vessels ruptures, the coolant will be contained by the other pressure vessel. Double containment is also provided between the pressure vessels and the isolation valves.

Forced Convection - Two-Loop Cooling

In this concept each fuel pin is cooled by two separate coolant channels, as shown in figure 3. The outer fuel surface is cooled by lithium flowing in an annular passage formed between the fuel pin and the honeycomb support structure, similar to the concept of reference 1. Redundant cooling is provided by a reentrant tube along the fuel axis. The outer coolant passages of all fuel pins are connected by one set of plena, and the inner coolant passages are connected by another set of plena. Each set of plena is isolated from the other. Each set of plena is connected to a separate primary loop system. If a failure occurs in either loop system, all the fuel pins could be cooled by the other system.

This concept does not require the use of double-containment pressure vessels and isolation valves; however, fabrication techniques for the fuel pins and pressure vessels have not been demonstrated. Also, failure of the fuel-pin clad might allow cross leakage of coolant between the two systems.

Heat-Pipe-Cooled, Solid-Bonded Core

A third concept, illustrated in figure 4, uses heat pipes to transport the heat from the fuel pins in the core to plena at both ends of the reactor. A similar heat-pipe-cooled, solid-bonded-core concept is presented in reference 4. Each plenum is connected to a different primary loop system, and the plena are separated such that the reactor core prevents cross leakage of flow between the two primary loop systems. The fuel pins are distributed in a square lattice such that one heat pipe is placed at the center of the lattice formed by four adjacent fuel pins. Heat generated in the fuel is conducted to the heat pipe and transported at nearly constant temperature to the coolant flowing through

the plena. The coolant in the plena might be either a liquid metal or a gas such as the Brayton power conversion system working fluid. Coolant redundancy is provided by passing adjacent heat pipes to different coolant plena at opposite ends of the core.

If coolant is lost from one of the primary loop systems, energy could not be removed from the heat pipes connected to that plenum. However, the energy normally removed by that plenum could be conducted to adjacent heat pipes and removed from the second plenum at the opposite end of the core. A similar redistribution of energy would occur if a single heat pipe failed. The energy removal effectiveness of this concept depends on maintaining thermal contact between fuel, T-111 block, and heat pipe. Although, this concept provides redundant cooling methods and avoids the complexity of double containment of the core, the thermal effectiveness of this concept needs to be evaluated. For example, thermal cycling and irradiation-induced fuel swelling may affect the thermal bonds between fuel, T-111 block, and heat pipe. A loss of the thermal bonds might result in excessive temperatures in either the fuel or the structural components. Also, the heat pipes require further testing to evaluate their reliability under reactor operating conditions.

Heat-Pipe-Cooled, Liquid-Bonded Core

A potential method of alleviating the bonding problem discussed in the previous concept is to introduce a liquid-metal (such as lithium) bond around the fuel element and around the heat pipe, as shown in figure 5. If the liquid bond can be contained, this thermal bond would be less sensitive to effects such as thermal cycling and fuel swelling. One thermal-bond containment system shown in figure 5 includes separate pressurization systems for the fuel-element bonds and the heat-pipe bonds. Although this system is complex and may be difficult to fabricate, it permits effective heat removal from the fuel elements following a loss of coolant in either primary loop system.

Heat-Pipe Cooling to Thermoelectric Converters

The concepts discussed previously have been applicable with either the Brayton, Rankine, or thermoelectric power conversion systems. The concept shown in figure 6 illustrates the application of heat-pipe cooling to a nuclear reactor - thermoelectric converter system (ref. 7). In figure 6 the fuel pins are contained in a solid-core matrix penetrated by heat pipes, similar to the arrangement shown in figure 4. Heat is conducted from the fuel, across the metal matrix, and into the heat pipe. A single thermoelectric converter is mounted on each heat pipe. Waste heat from the heat pipe could

be removed to a radiator either by a forced convective loop or by another heat pipe. Any single failure of either a heat pipe or a thermoelectric converter would result in a loss of output from that heat-pipe - converter system, but the energy generated in the fuel would be conducted to an adjacent heat-pipe - converter system.

EVALUATION OF REACTOR CONTROL CONCEPTS

A moving-fuel control concept has previously been considered (ref. 1). This concept, however, is incompatible with the previously discussed primary coolant redundancy requirement. This incompatibility, in conjunction with the potential problems associated with the high-temperature bearings and the nutating bellows seals of this system (fig. 1), has led to considerations of alternate systems.

Schematics of the alternate control concepts considered are shown in figures 7 to 9. These concepts remove the requirement of operating within the primary loop pressure vessel. Therefore, the problems associated with penetrations of hermetically sealed pressure vessels can be alleviated.

Figure 7 illustrates an axially moving poison rod control concept. Figure 8 illustrates a rotating poison drum concept. And figure 9 illustrates a sliding reflector concept. This sliding reflector concept is amendable for use with a 4π shield.

The two poison control concepts considered utilize boron carbide (B_4C or $B_{6.5}C$) enriched in the boron-10 isotope. From a neutronics point of view, boron carbide is the most desirable of the boron-containing compounds. It has a higher boron atom density than the various metal borides also considered for use. Other materials besides boron compounds might also hold some potential. However, they would not be as effective because their neutron cross sections are smaller than that of the boron-10 isotope at the higher neutron energies.

Many materials could conceivably be used in a movable reflector control system (i.e., a system which controls by the neutron leakage method). Some of the materials that might be considered are discussed in reference 8. This reference presents reactor critical mass information for various reflector materials as a function of reflector thickness. In order to keep the overall reactor size within reasonable limits, present evaluations have been limited to movable reflector systems which employ beryllium (Be), beryllium oxide (BeO), and molybdenum (Mo).

The poison rod and movable reflector control methods discussed herein will all afford adequate reactivity control for the reactor sizes of interest herein. See reference 3 for a discussion of the reactivity requirements. The reactivity control afforded by the rotating poison drum method, however, is marginal.

Preliminary heat-transfer calculations indicated that for nonfueled control devices

it might be possible to dissipate control system heat through passive cooling only. It appeared that temperatures could be maintained to within allowable limits by using only radiant heat exchange. Since a passively cooled device is very desirable from the point of view of overall simplicity, our efforts have been directed toward a consideration of such control devices.

Poison Rod Control Concept

A poison rod control method is discussed in reference 1. In this concept (fig. 7) enriched B_4C rods are located in dry wells within the core pressure vessel. The use of dry wells circumvents the liquid-metal-lubricated bearing as well as the penetration device problem of the moving-fuel control concept. Perhaps the most important feature of the rod control method is that reactor size can be increased without having to contend with possible problems in satisfying reactivity control requirements. More dry wells and rods could be added should the reactor size requirements increase. On the other hand, this method is not very compatible with the loss-of-coolant redundancy concepts discussed earlier. There would be physical interference between the control rods and the primary coolant loop components.

Some results of a heat-transfer analysis to establish B_4C control rod temperatures are given in reference 1. The gamma heat and the energy liberated in the $B^{10}(n, \alpha)Li^7$ reaction are transferred to the liquid-metal coolant by radiant heat exchange across the dry well void. For the reference reactor case considered (i.e., 2-MW thermal power), the maximum B_4C temperature is about 1600 K for a rod and dry well surface emittance of 0.2 (i.e., in the range of the emissivity value for those materials considered for use as a clad). The maximum B_4C temperature could be reduced to about 1330 K if the emittance were increased to 0.8.

Nothing is presently known about the behavior of B_4C at such high temperatures at the fluences that would be encountered during reactor operation. There is a need for irradiation swelling and helium release[1] information. In addition, Sinclair (ref. 9) reports compatibility test results which indicate that compatibility problems would be encountered between the poison material and the clad at the higher temperature level.

The unknown behavior of B_4C and the possibility of requiring high-emittance coatings are the primary disadvantages of this method of reactor control.

Rotating Poison Drum Concept

Another candidate poison control method is shown in figure 8. In this concept, the

[1]Helium is formed through the B^{10} neutron-alpha particle reaction.

movable poison (enriched B_4C) is contained in drums located in the reflector. In reality, this method consists of a combination of the poison and leakage methods of control.

A heat-transfer analysis was performed, and it was determined that control device temperatures for this system were very comparable to those realized with the poison rod system. The radiant heat sink for the drum method (i.e., the reactor shield) would be much lower in temperature than the sink (liquid-metal coolant) in the poison rod method. However, this advantage is counteracted by the fact that the drum heat flux is higher than the poison rod heat flux. This higher heat flux is caused by the much greater volume of refractory metal (molybdenum-base alloy) per surface area in the control drum. This greater volume results in a much larger gamma heat generation rate per heat-transfer surface area.

The drum control method, however, does offer an advantage over the rod control method. If desired, the drum temperature could be reduced by the use of a cold-wall auxiliary system.

Axially Sliding Reflector Control Method

An axially sliding reflector system (fig. 2) has also been considered for reactivity control. Such systems afford control by the neutron leakage method.

One-dimensional heat-transfer analyses have been performed to obtain preliminary estimates of the reflector temperatures to be expected with sliding Mo, Be, or Mo-clad BeO systems. A clad BeO system was analyzed because of possible cracking and powdering of the BeO due to radiation damage (ref. 10). Fast fluences ($E > 0.8$ MeV) in the range of 1×10^{21} neutrons per square centimeter are anticipated in the reflector for the reference 2.0-megawatt reactor over a 50 000-hour lifetime.

One-dimensional heat-transfer analyses covering a range of reactor sizes (power levels from 1 to 3 MW thermal) were performed. Some results of these analyses are given in table II. To afford a comparison with the poison control device temperatures given previously, the temperatures given in table II are also for a 2.0-megawatt reference case reactor utilizing a 4π shield. For the cases given, the surface emittance of the pressure vessel and reflector are assumed to be 0.2. The shield was assumed to have an emittance value of 0.45 and to be at 811 K (1000° F).

Beryllium has a noticeable vapor pressure at high temperatures and reference 11 states that it is not considered for use much above 920 K (1200° F). The present heat-transfer analysis, however, indicates that for the smaller (lower power) reactors, temperatures could be reduced to within tolerable limits through the use of high-emittance coatings on the reflector and surrounding shield. Temperatures would be even lower for a reactor system of the type shown in figure 2, where there is no radial shield and

the reflector heat is dissipated directly to space.

Although information is available concerning the behavior of Be in a high-fluence environment, further information would be required to establish the long-term - high-fluence stability of surface coatings on Be in a space environment.

The BeO radiation damage data of reference 10 indicate that swelling can be minimized by operating the BeO at as high a temperature as possible. The data indicate that, by maintaining the BeO temperature at 1273 K or higher, the volumetric swelling can be held to within tolerable limits (considered to be 3 percent). The results of heat-transfer analysis indicate that the regions of the reflector subjected to fast fluences in the range of 1×10^{21} neutrons per square centimeter could be maintained at temperatures of 1273 K (or above) over the complete reactor power range considered (1 to 3 MW thermal power) through the use of a low-emittance radiation shield around the reflector. The portions of the reflector further from the reactor centerplane could not be maintained at such a high temperature. However, these regions would not be subjected to as high a fast fluence.

The Mo radiation damage data from reference 12 indicate that radiation damage to a Mo reflector would pose no problem. However, as seen in table II, the maximum reflector temperatures would be high. As a result, some system components, such as the bearings, would have to operate in a high-temperature environment, unless use were made of an auxiliary cooling system.

Comparison of Control Method, Cost, and Weight

Weight and cost, which are also criteria against which the control methods are evaluated, were considered.

Relative control element weights are given in table III. A Be system would be the lightest in weight. But as previously stated, further information would be required to establish the stability of the high-emittance surface coating required with the system. And even then, analysis indicates that high temperature might still be a problem with the larger sized reactors considered.

From a weight point of view, a BeO system would be the next most attractive. As seen in table III, the use of a clad (10-vol. % Mo has been considered) does not add prohibitively to the system weight. The all-Mo system, however, is heavier than the BeO system by a factor of 3.4.

A B_4C-Mo rotating drum system would be only a factor of 1.5 heavier than a BeO sliding reflector system. However, further information is needed to fully assess the use of B_4C at the temperature levels that would be encountered.

The weight of the rods in a poison rod control system would be relatively light. However, when the rod weight is combined with the weight of the Mo reflector considered for this system, the weight becomes very large.

Another consideration which makes a poison system less attractive than any of the sliding reflector systems considered is that the cost of the enriched B_4C required for adequate reactivity control is very high. For a 2-megawatt reactor, approximately $250 000 worth of B_4C would be required for control with poison drums. Only $60 000 worth of Be (the most expensive of the other materials considered) would be required for control of the same size reactor with a sliding reflector.

CONCLUDING REMARKS

Five reactor cooling concepts which would allow continued reactor operation after a single loss-of-coolant accident are presented. The concept utilizing forced convection cooling with double-containment pressure vessels allows the use of the fuel-pin fabrication technology and experience gained on the Advanced-Power-Reactor (APR) concept discussed in reference 1. However, assembly of the two pressure vessels may be difficult, and isolation valves would be required. The heat-pipe-cooled solid-bonded-core concept uses arrays of heat pipes instead of double-containment pressure vessels. Neither the heat-pipe reliability nor the effectiveness of the thermal bonds in the core has been adequately evaluated. Several reactor control concepts were investigated for compatibility with these designs. A molybdenum-clad, beryllium oxide, sliding reflector located outside the pressure vessel is recommended based on radiation stability, weight, and cost considerations.

Lewis Research Center,
National Aeronautics and Space Administration,
Cleveland, Ohio, September 24, 1973,
503-25.

REFERENCES

1. Krasner, Morton H.; Davison, Harry W.; and Diaguila, Anthony J.: Conceptual Design of a Compact Fast Reactor for Space Power. NASA TM X-67859, 1971.

2. Gluyas, R. E.; and Lietzke, A. F.: Nuclear Technology Program for a Compact Fast Reactor for Space Power. NASA TM X-67869, 1971.

3. Mayo, Wendell; Klann, Paul G.; and Whitmarsh, Charles L., Jr.: Nuclear Design and Experiments for a Space Power Reactor. NASA TM X-67857, 1971.

4. Davison, Harry W.: Preliminary Analysis of Accidents in a Lithium-Cooled Space Nuclear Power Plant. NASA TM X-1937, 1970.

5. Turney, George E.; Petrik, Edward J.; and Kieffer, Arthur W.: Analysis of Loss-of-Coolant Accident for a Fast-Spectrum Lithium-Cooled Nuclear Reactor for Space-Power Applications. NASA TM X-2483, 1972.

6. Peoples, John A.: Emergency Cooling Analysis for the Loss of Coolant Malfunction. NASA TM X-2464, 1972.

7. Breitwieser, Roland; and Lantz, Edward: A Design Study of a 350 kWe Out-of-Core Nuclear Thermionic Converter System. Presented at the Fifth Intersociety Energy Conversion Engineering Conference, Las Vegas, Nev., Sept. 21-25, 1970.

8. Paxton, H. C.; Thomas, J. T.; Callihan, Dixon; and Johnson, E. B.: Critical Dimensions of Systems Containing U^{235}, Pu^{239}, and U^{233}. Rep. TID-7028, Los Alamos Scientific Lab., June 1964.

9. Sinclair, John H.: Compatibility Tests of Materials for a Lithium-Cooled Space Power Reactor Concept. NASA TN D-7259, 1973.

10. Keilholtz, G. W.; Lee, J. E., Jr.; and Moore, R. E.: Irradiation Damage to Sintered Beryllium Oxide as a Function of Fast-Neutron Dose and Flux at 110, 650, and 1100° C. Nucl. Sci. Eng., vol. 26, 1966, pp. 329-338.

11. Etherington, Harold, ed.: Nuclear Engineering Handbook. McGraw-Hill Book Co., Inc., 1958.

12. Wiffen, F. W.: Radiation Damage to Refractory Metals as Related to Thermionic Applications. Rep. ORNL-TM-3629, Oak Ridge National Lab., Feb. 1972.

TABLE I. - APR POWER AND TEMPERATURE GOALS

	Power conversion system		
	Brayton	Rankine (Sodium)	Thermoelectric (Si-Ge)
Temperature, K	1220 to 1500	~1400	~1300
Efficiency, percent	20 to 30	~20	~6
Electric power range, kW	20 to 200	20 to 200	20 to 200
Reactor power range, kWt	60 to 1000	100 to 1000	300 to 3000

TABLE II. - MOVABLE REFLECTOR TEMPERATURES

FOR 2-MEGAWATT REFERENCE REACTOR

Reflector material	Maximum temperature	
	K	^{o}F
Be	1100	1525
BeO (Mo clad)	1170	1646
Mo	1390	2046

TABLE III. - RELATIVE WEIGHT OF CONTROL SYSTEMS

Control concept	Material	Control system relative weight
Rotating poison drum	B_4C-Mo	1.5
Sliding reflector	Be	0.6
	BeO	1.0
	BeO (Mo clad)	1.3
	Mo	3.4

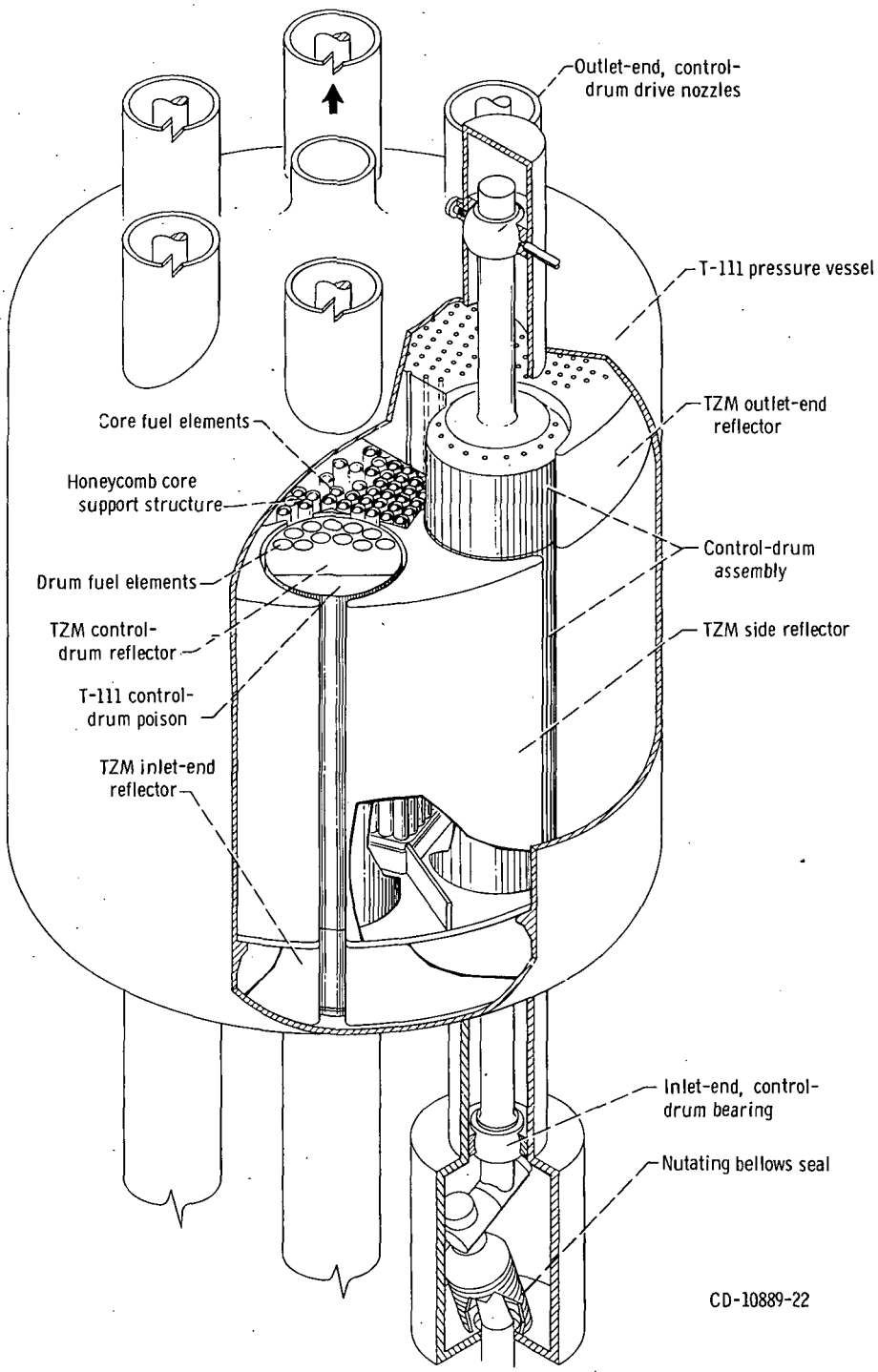

Figure 1. - Space power reference reactor (APR-1).

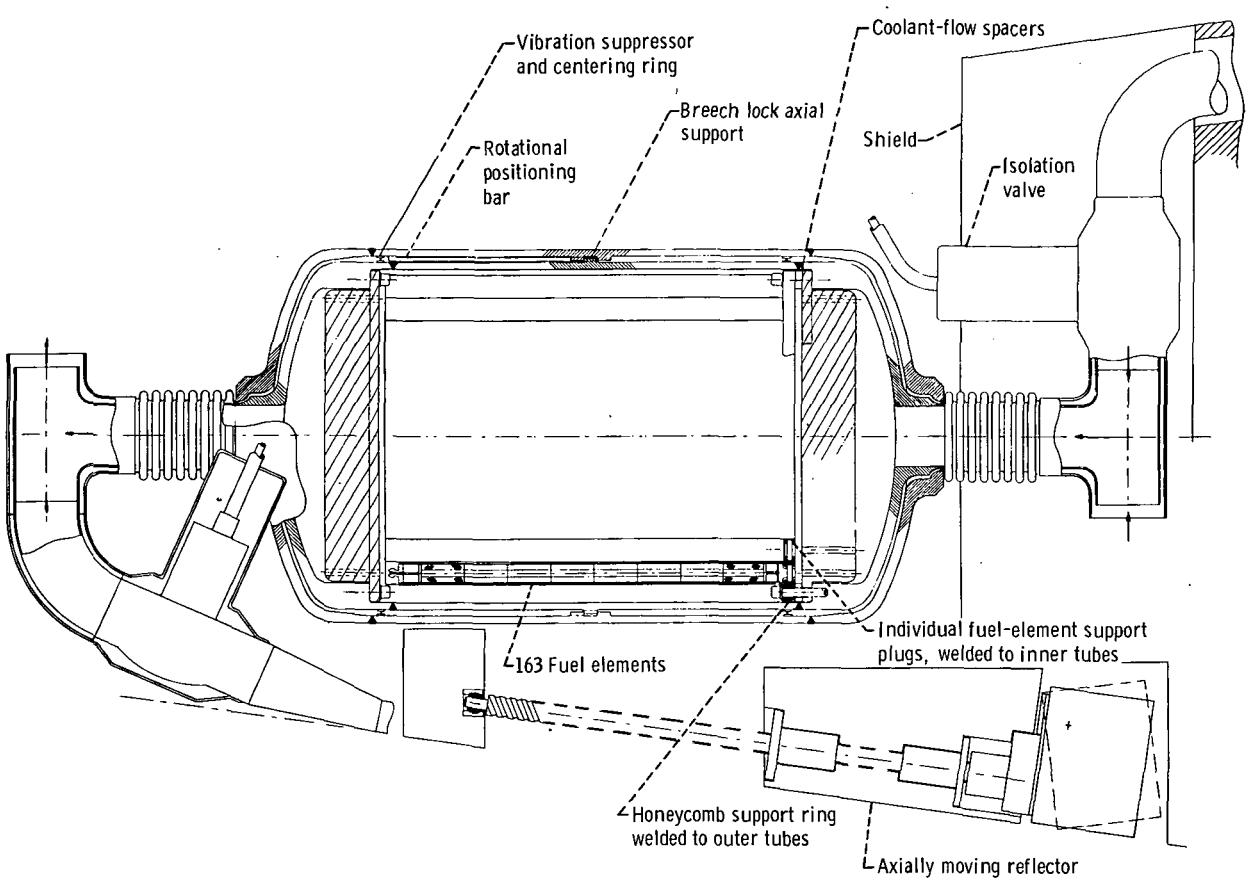

Figure 2. - One-megawatt convectively cooled reactor concept with double containment and axially moving reflectors (APR-6).

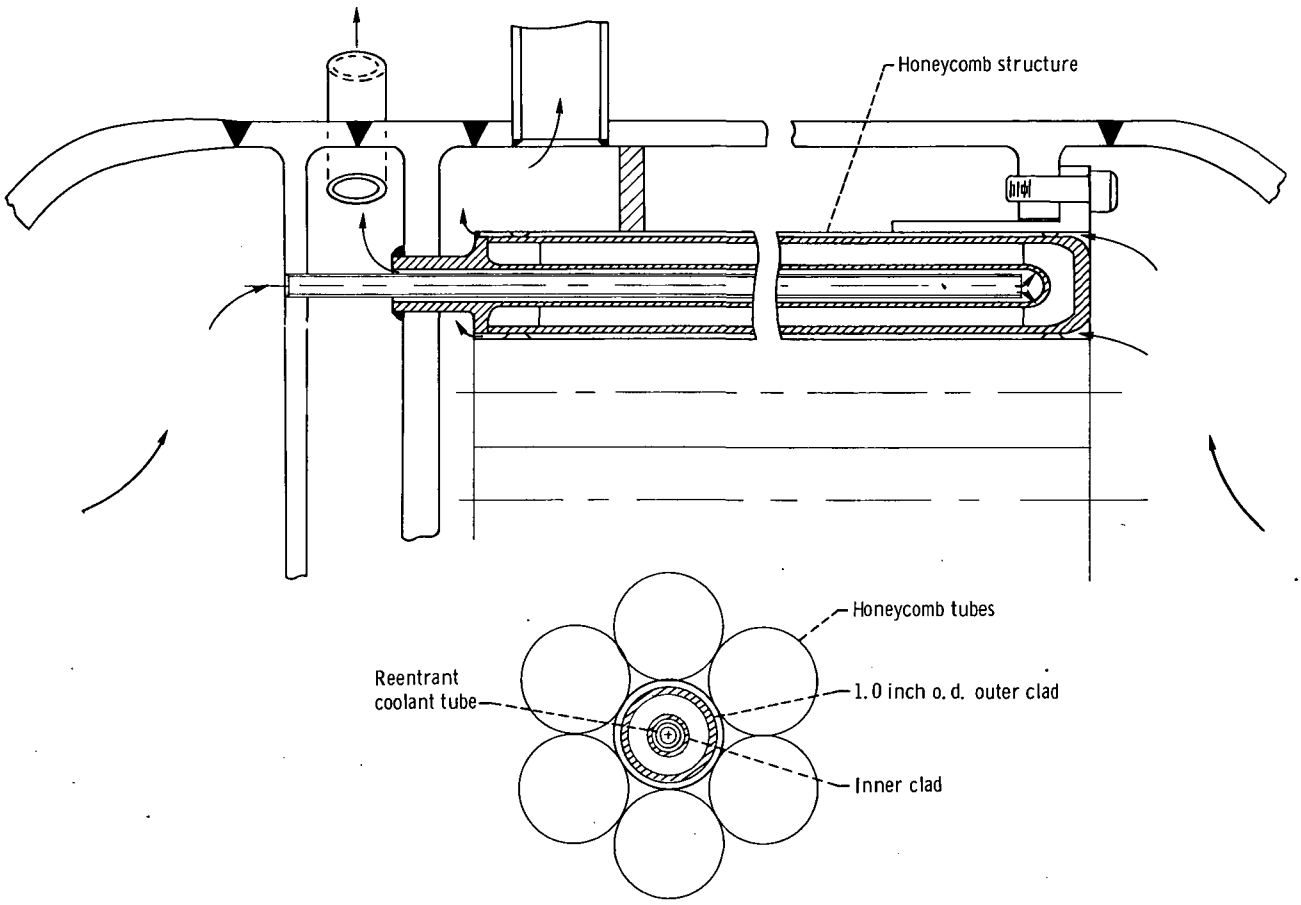

Figure 3. - Forced convection, two-loop cooling concept. Cylindrical fuel and two coolant loops (outer clad and reentrant tube).

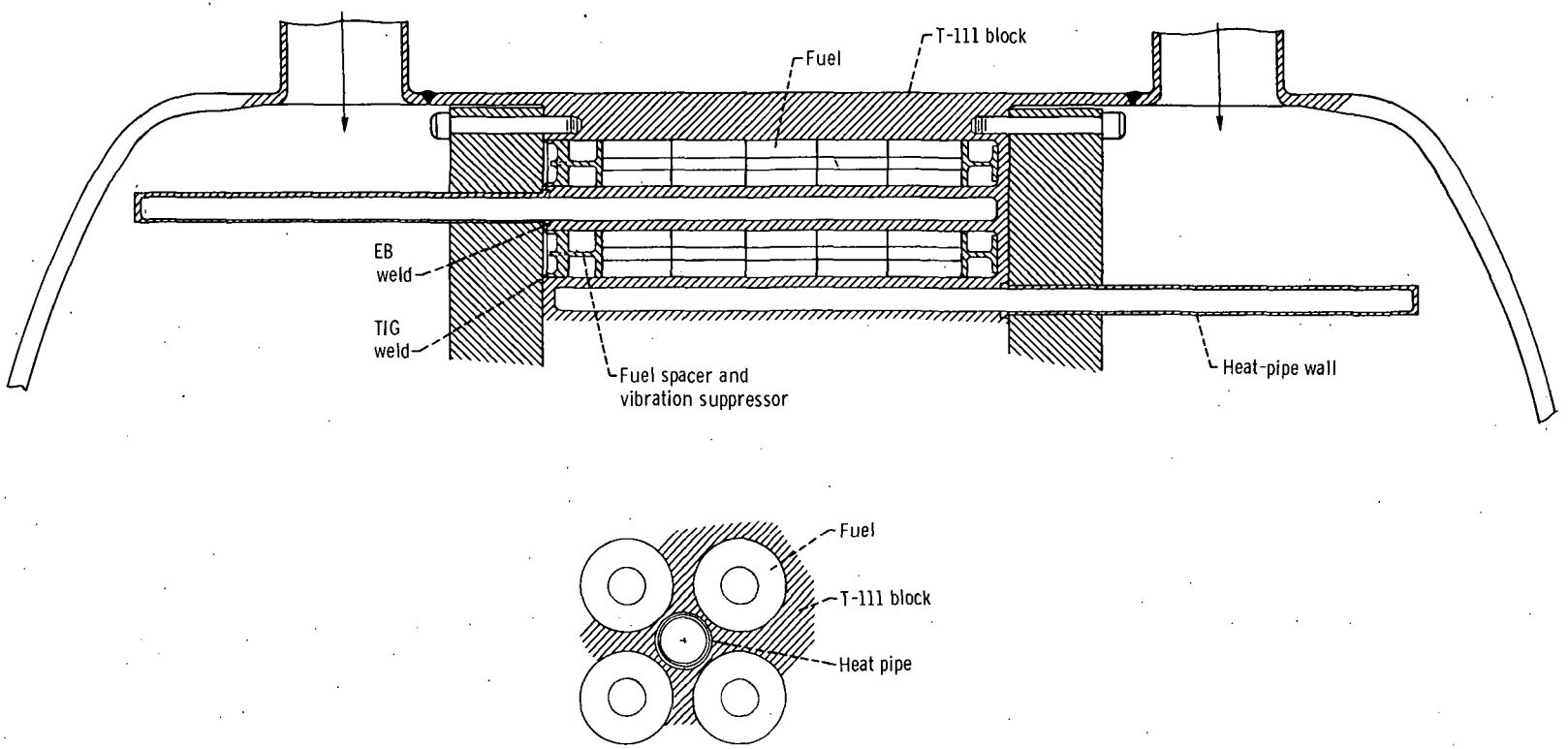

Figure 4. - Heat-pipe-cooled, solid-bonded core concept. "Revolver" structure; no stagnant lithium heat transfer; alternating heat pipes.

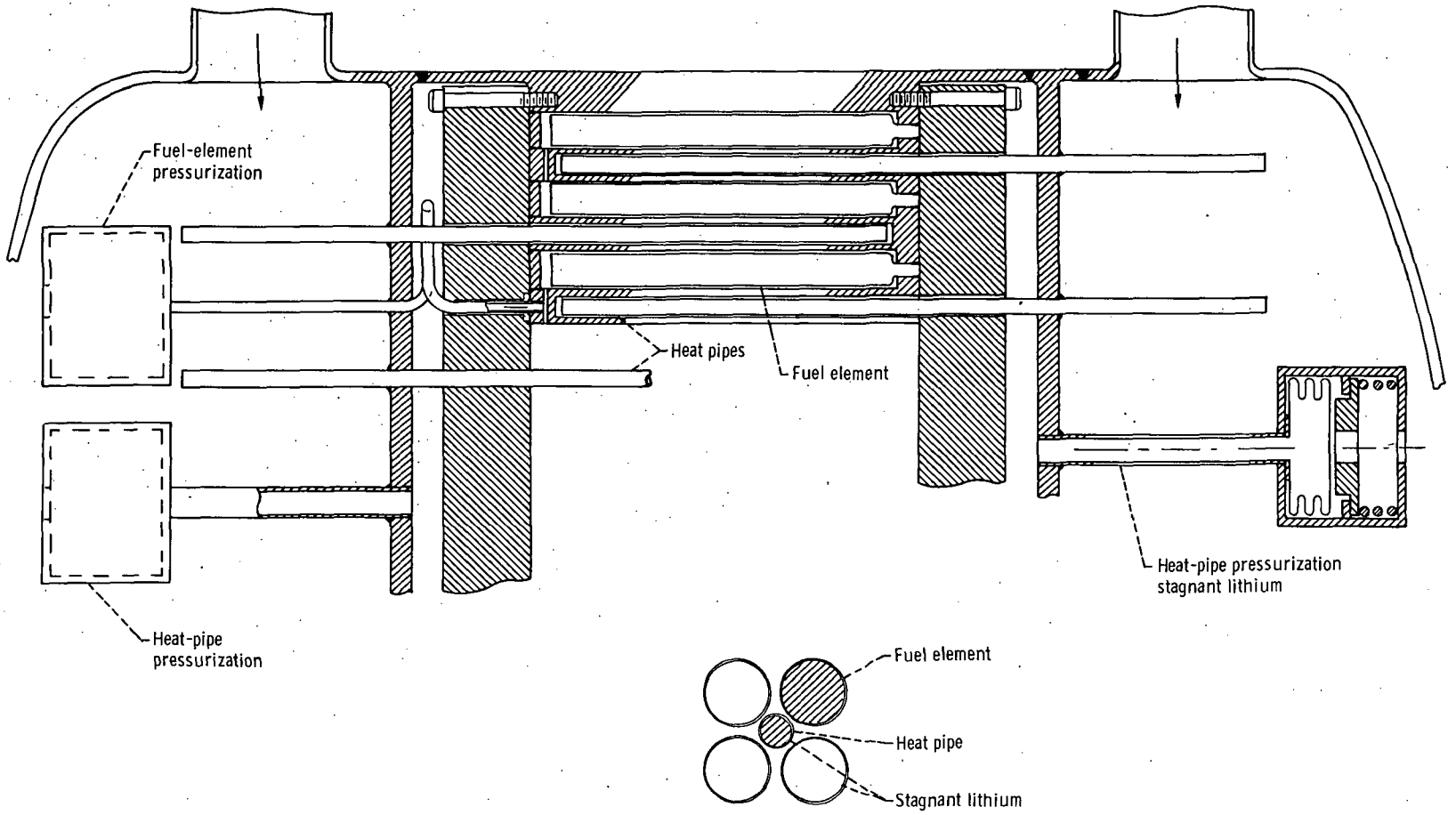

Figure 5. - Heat-pipe-cooled, liquid-bonded core concept. "Revolver" structure; stagnant lithium heat transfer; internal pressurizers.

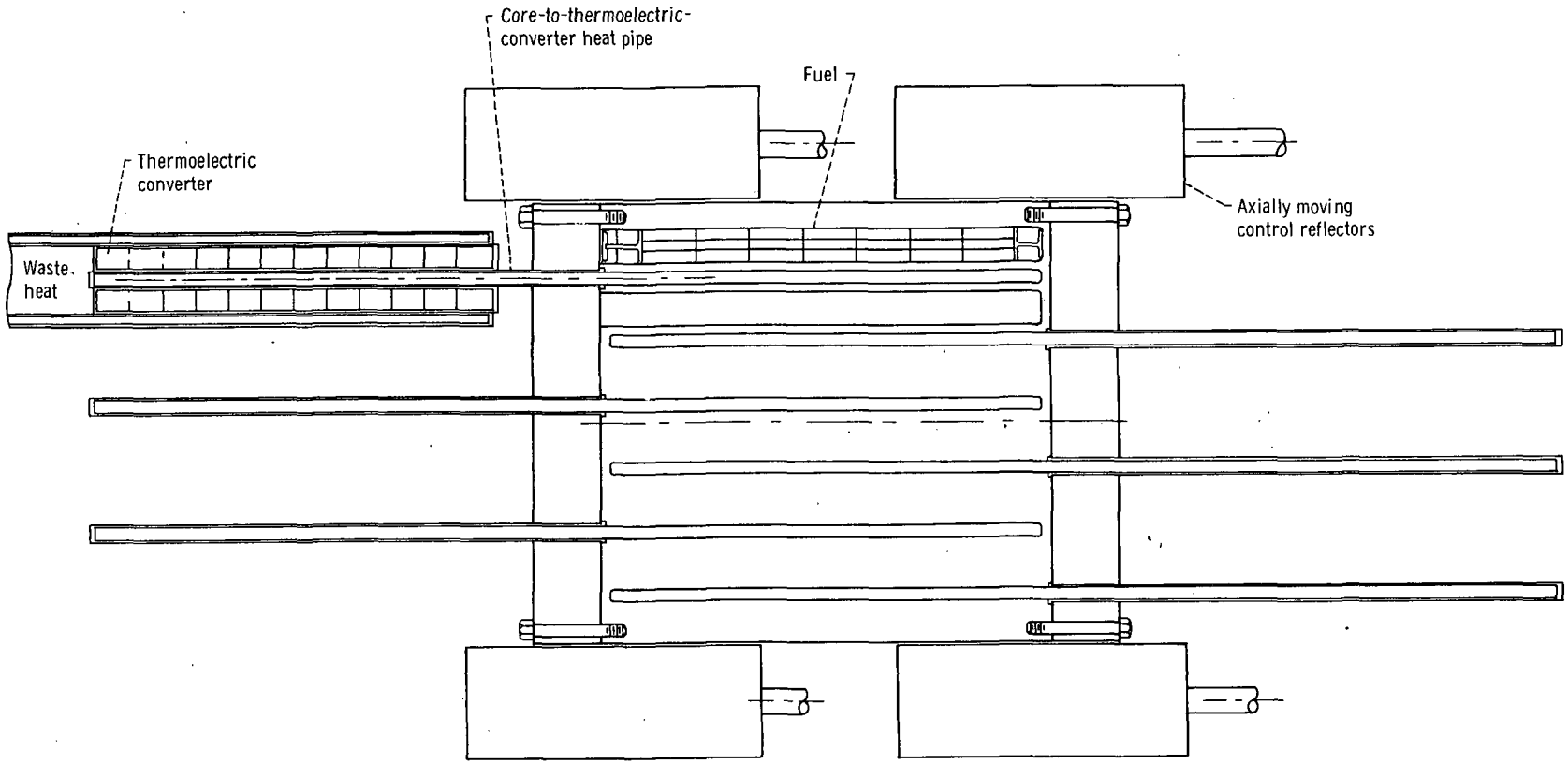

Figure 6. - Heat-pipe-cooling, thermoelectric-converter concept.

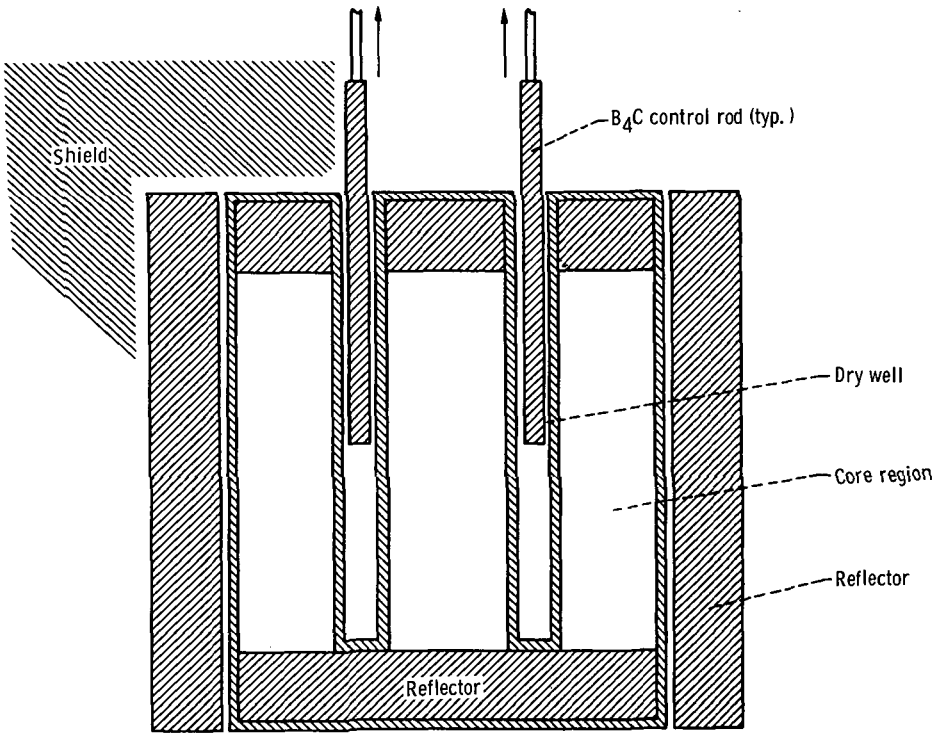

Figure 7. - Poison rod control concept.

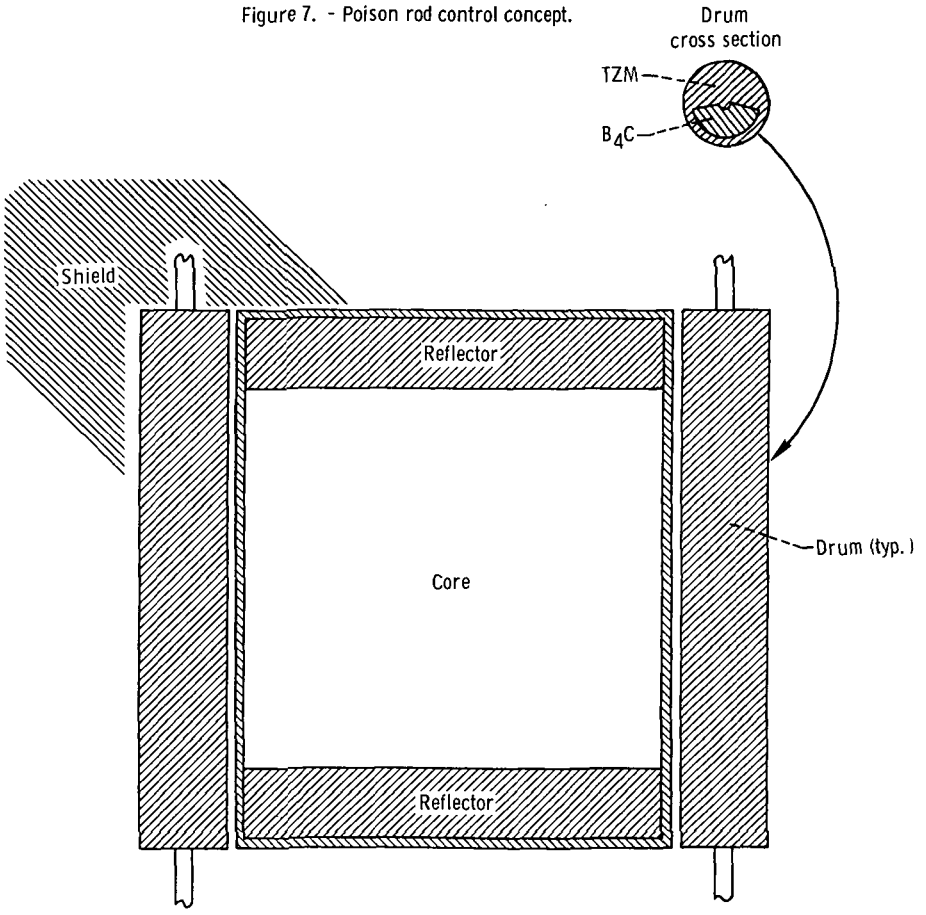

Figure 8. - Rotating poison drum concept.

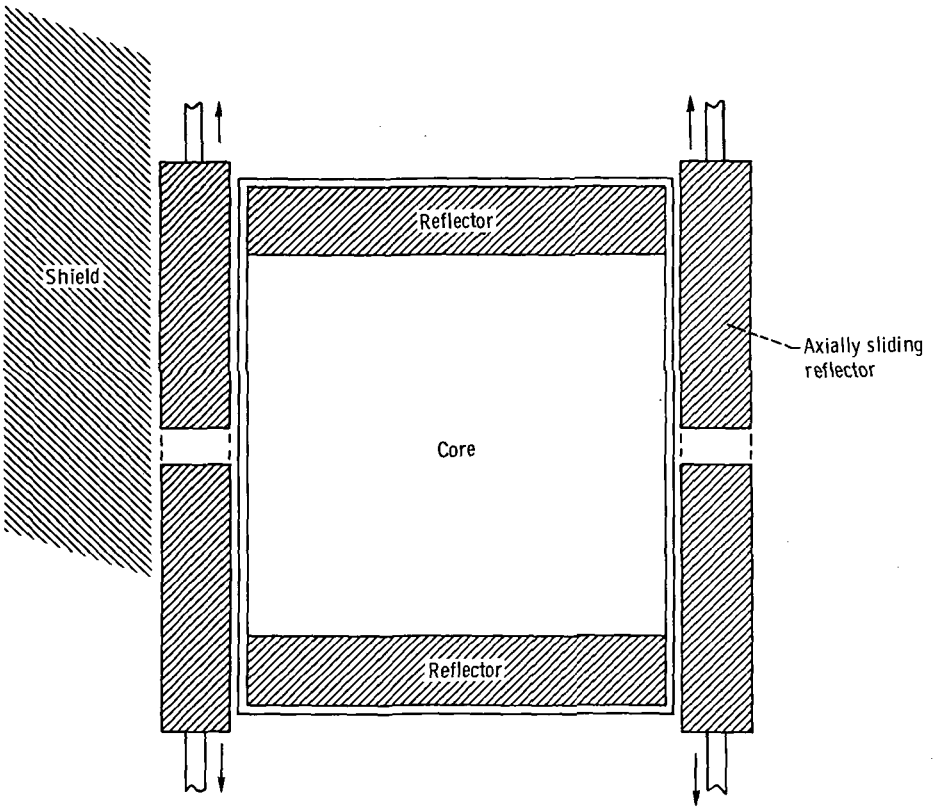

Figure 9. - Sliding reflector concept.

NASA-Langley, 1974 —— 22 E-7614

NATIONAL AERONAUTICS AND SPACE ADMINISTRATION
WASHINGTON, D.C. 20546

OFFICIAL BUSINESS
PENALTY FOR PRIVATE USE $300

SPECIAL FOURTH-CLASS RATE
BOOK

POSTAGE AND FEES PAID
NATIONAL AERONAUTICS AND
SPACE ADMINISTRATION
451

U.S.MAIL

POSTMASTER: If Undeliverable (Section 158 Postal Manual) Do Not Return

"The aeronautical and space activities of the United States shall be conducted so as to contribute . . . to the expansion of human knowledge of phenomena in the atmosphere and space. The Administration shall provide for the widest practicable and appropriate dissemination of information concerning its activities and the results thereof."

—NATIONAL AERONAUTICS AND SPACE ACT OF 1958

NASA SCIENTIFIC AND TECHNICAL PUBLICATIONS

TECHNICAL REPORTS: Scientific and technical information considered important, complete, and a lasting contribution to existing knowledge.

TECHNICAL NOTES: Information less broad in scope but nevertheless of importance as a contribution to existing knowledge.

TECHNICAL MEMORANDUMS: Information receiving limited distribution because of preliminary data, security classification, or other reasons. Also includes conference proceedings with either limited or unlimited distribution.

CONTRACTOR REPORTS: Scientific and technical information generated under a NASA contract or grant and considered an important contribution to existing knowledge.

TECHNICAL TRANSLATIONS: Information published in a foreign language considered to merit NASA distribution in English.

SPECIAL PUBLICATIONS: Information derived from or of value to NASA activities. Publications include final reports of major projects, monographs, data compilations, handbooks, sourcebooks, and special bibliographies.

TECHNOLOGY UTILIZATION PUBLICATIONS: Information on technology used by NASA that may be of particular interest in commercial and other non-aerospace applications. Publications include Tech Briefs, Technology Utilization Reports and Technology Surveys.

Details on the availability of these publications may be obtained from:

SCIENTIFIC AND TECHNICAL INFORMATION OFFICE

NATIONAL AERONAUTICS AND SPACE ADMINISTRATION

Washington, D.C. 20546