NASA TECHNICAL MEMORANDUM

NASA TM X-2979

NASA TM X-2979

CASE FILE COPY

COMPUTER STUDY OF EMERGENCY SHUTDOWNS OF A 60-KILOWATT REACTOR BRAYTON SPACE POWER SYSTEM

by Roy C. Tew and Kent S. Jefferies

Lewis Research Center

Cleveland, Ohio 44135

NATIONAL AERONAUTICS AND SPACE ADMINISTRATION • WASHINGTON, D. C. • FEBRUARY 1974

1. Report No.	2. Government Accession No.	3. Recipient's Catalog No.
NASA TM X-2979		

4. Title and Subtitle	5. Report Date
COMPUTER STUDY OF EMERGENCY SHUTDOWNS OF A 60-KILOWATT REACTOR BRAYTON SPACE POWER SYSTEM	February 1974
	6. Performing Organization Code
7. Author(s)	8. Performing Organization Report No.
Roy C. Tew and Kent S. Jefferies	E-7651
	10. Work Unit No.
9. Performing Organization Name and Address	502-25
Lewis Research Center National Aeronautics and Space Administration Cleveland, Ohio 44135	11. Contract or Grant No.
	13. Type of Report and Period Covered
12. Sponsoring Agency Name and Address	Technical Memorandum
National Aeronautics and Space Administration Washington D.C. 20546	14. Sponsoring Agency Code

15. Supplementary Notes

16. Abstract

A digital computer study of emergency shutdowns of a 60-kWe reactor Brayton power system was conducted. Malfunctions considered were (1) loss of reactor coolant flow, (2) loss of Brayton system gas flow, (3) turbine overspeed, and (4) a reactivity insertion error. Loss of reactor coolant flow was the most serious malfunction for the reactor. Methods for moderating the reactor transients due to this malfunction are considered.

17. Key Words (Suggested by Author(s))	18. Distribution Statement
Digital simulation; Reactor; Brayton power system; System analysis; Heat exchanger; Shutdown; Scram	Unclassified - unlimited Cat. 22

19. Security Classif. (of this report)	20. Security Classif. (of this page)	21. No. of Pages	22. Price*
Unclassified	Unclassified	30	$3.00

* For sale by the National Technical Information Service, Springfield, Virginia 22151

COMPUTER STUDY OF EMERGENCY SHUTDOWNS OF A 60-KILOWATT REACTOR BRAYTON SPACE POWER SYSTEM

by Roy C. Tew and Kent S. Jefferies

Lewis Research Center

SUMMARY

A digital computer study of emergency shutdowns of a 60-kilowatt reactor Brayton power system was conducted. The purpose of the study was to evaluate a proposed reactor emergency shutdown (scram) procedure. The procedure consists of rapid sequential stepping of eight reactor control drums (neutron reflectors) in the direction of decreasing reactivity and power whenever certain reactor variables exceed specified limits. The simulated malfunctions which initiated the shutdowns were: (1) loss of reactor coolant flow, (2) loss of Brayton power conversion system gas flow, (3) turbine overspeed (from loss of electrical load), and (4) a reactivity insertion error. The resulting reactor transients were evaluated on the basis of design limits on reactor critical variables. The design limits used were preliminary in nature and may be more restrictive than necessary.

With sudden loss of reactor coolant flow to 1 percent of the design value and use of the proposed scram rate of 200 drum steps per minute (each step having a reactivity value of 0.5 cent), the reactor would exceed certain design limits by a wide margin. Two methods found to moderate the reactor temperature transients for this malfunction were: (1) increasing the scram rate and (2) supporting the coolant flow at some percent of the design value. Supporting the coolant flow at 10 percent of its design value was more effective than an instantaneous scram of the reactor in reducing the excessive temperature change across the reactor and about as effective in reducing peak core temperature. However, even with coolant flow supported at 10 percent of design, the maximum reactor ΔT and the peak core temperature were excessive. The turbine overspeed malfunction resulted in a reactor ΔT which was 20 percent greater than the recommended maximum in the steady-state condition. For the reactivity insertion malfunctions, the maximum reactor ΔT was about equal to the recommended maximum for the runs made. The loss of gas flow malfunction was not a problem.

INTRODUCTION

Nuclear reactor power systems will increase operational capabilities for future space missions. The Brayton cycle is a candidate for the nuclear power conversion system. One proposed nuclear Brayton system uses a 300-kilowatt zirconium-hydride-moderated thermal reactor with a 60-kilowatt electrical power conversion system. A schematic of this system is shown in figure 1; design temperatures and flow rates are listed on the schematic. NaK, at the eutectic mixture for sodium and potassium, is circulated to transfer heat from the reactor to the heat source heat exchanger. A xenon-helium mixture (molecular weight of 83.8) absorbs heat in the heat exchanger. The heated gas mixture powers a turbine-alternator-compressor unit. The closed Brayton loop is completed with a recuperator and a gas-liquid heat exchanger. The heat exchanger transfers waste heat to the radiator loop. The standby heat exchanger shown in the NaK loop of figure 1 is for a redundant Brayton system that increases system reliability.

As the primary energy source of the system, the purpose of the zirconium-hydride reactor is to heat the NaK (the eutectic of sodium and potassium) flowing through it to 921 K (1200° F). It is capable of producing 300 kilowatts of thermal power continuously during a 5-year mission. The reactor core consists of 199 fuel elements held in position

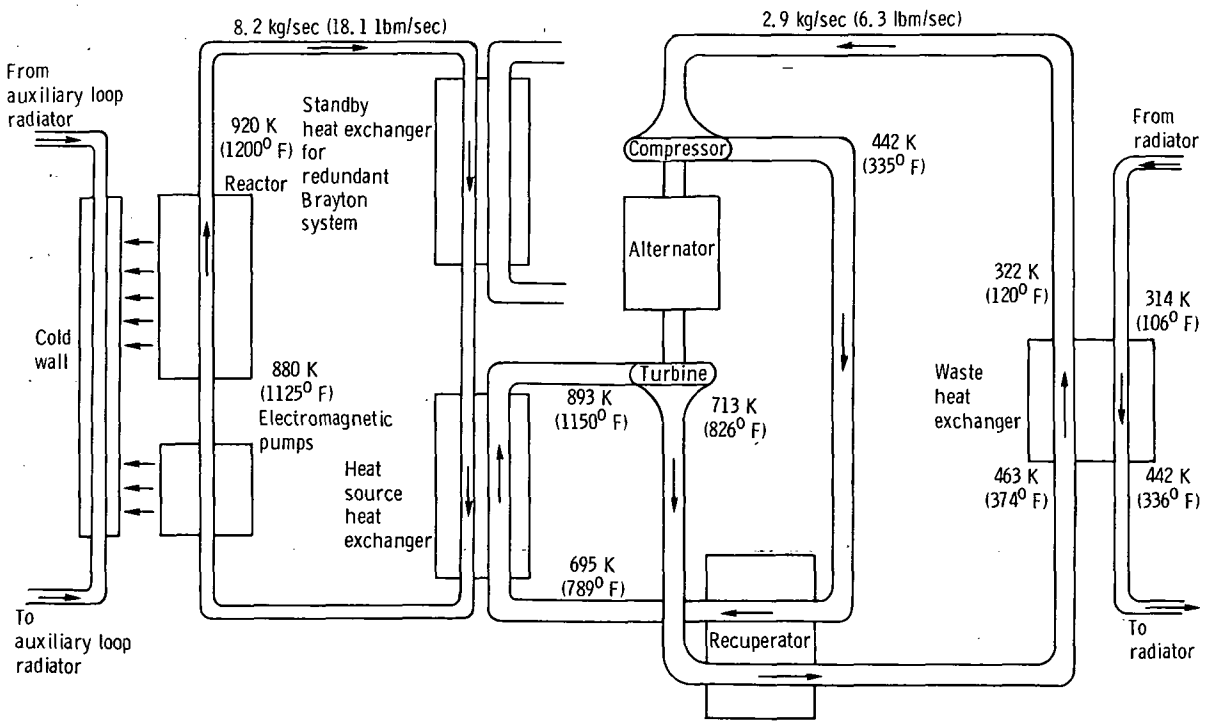

Figure 1. - Reactor Brayton system.

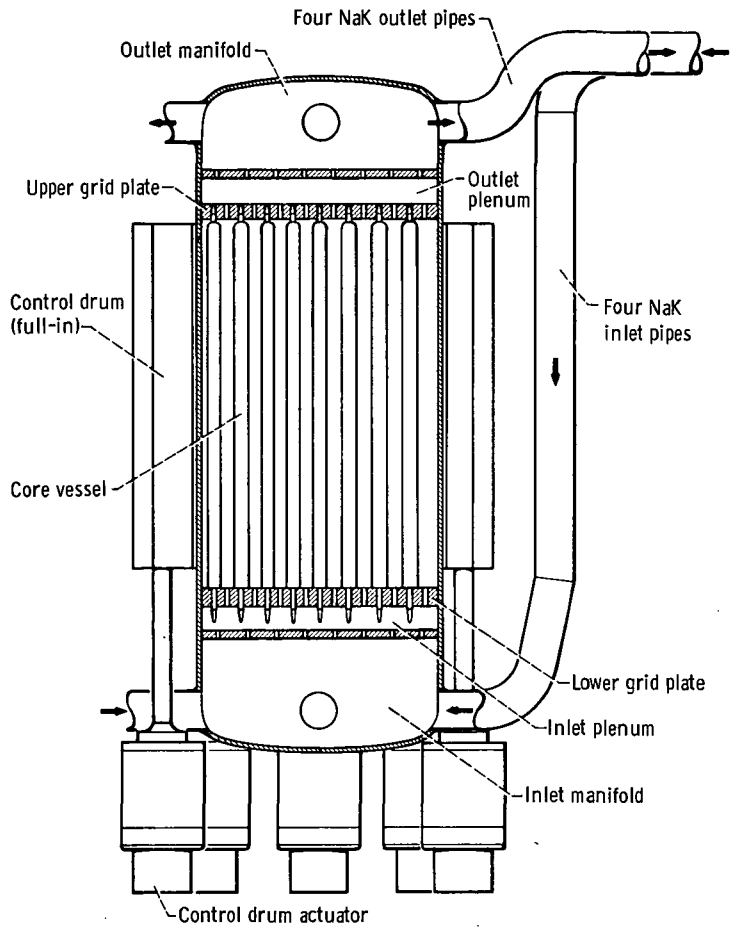

Figure 2. - Reactor assembly.

by two grid plates, as shown in figure 2. The control drums, which surround the reactor core, control the nucleonic reaction by reflecting neutrons back into the core. To provide an inherent power stability, the reactor core was designed to have negative temperature coefficients of reactivity through physical expansion effects. For example, a random increase in power resulting in a rise in reactor temperature will expand the core structure thereby increasing leakage of neutrons from the core and reducing the power back toward its original level.

Eight control drums are the only devices used to control the reactor. The drums can be moved in small steps and are used for reactor startup, for reactor control during power conversion system startup and other transients, for balancing the reactivity changes caused by fuel depletion, and for reactor shutdown. A cold wall and an auxiliary (NaK) coolant loop are used to cool the reactor control drums.

Reactor thermal transients need to be studied for several reasons. First, there are potential hazards from radioactivity. Safe operating procedures must therefore be

developed to assure long-term structural integrity of the reactor. Particular attention must be paid to transients which would follow potential system malfunctions. These transients could subject the reactor to severe thermal stress. An additional requirement (which constrains the thermal transients even more than the safety requirement) is that the emergency shutdown procedure must be such that the reactor can withstand the transients and be capable of restart.

The study reported herein evaluated the proposed reactor emergency shutdown (scram) procedure for certain reactor Brayton system malfunctions. The proposed scram procedure consists of rapid sequential stepping outward of eight control drums (neutron reflectors) to decrease reactivity and power. The study was performed using a digital computer dynamic simulation of the power system.

Four types of malfunctions were studied: (1) loss of reactor coolant (NaK) flow, (2) loss of gas flow, (3) turbine overspeed, and (4) reactivity insertion error. In the study, the reactor was scrammed following a malfunction if a critical variable exceeded a specified design limit. For each malfunction, one or more runs were made to evaluate the effect of changes in shutdown procedure and/or operating conditions on the reactor thermal transients.

DIGITAL COMPUTER SIMULATION

A schematic showing the components simulated is shown in figure 3. The simulation

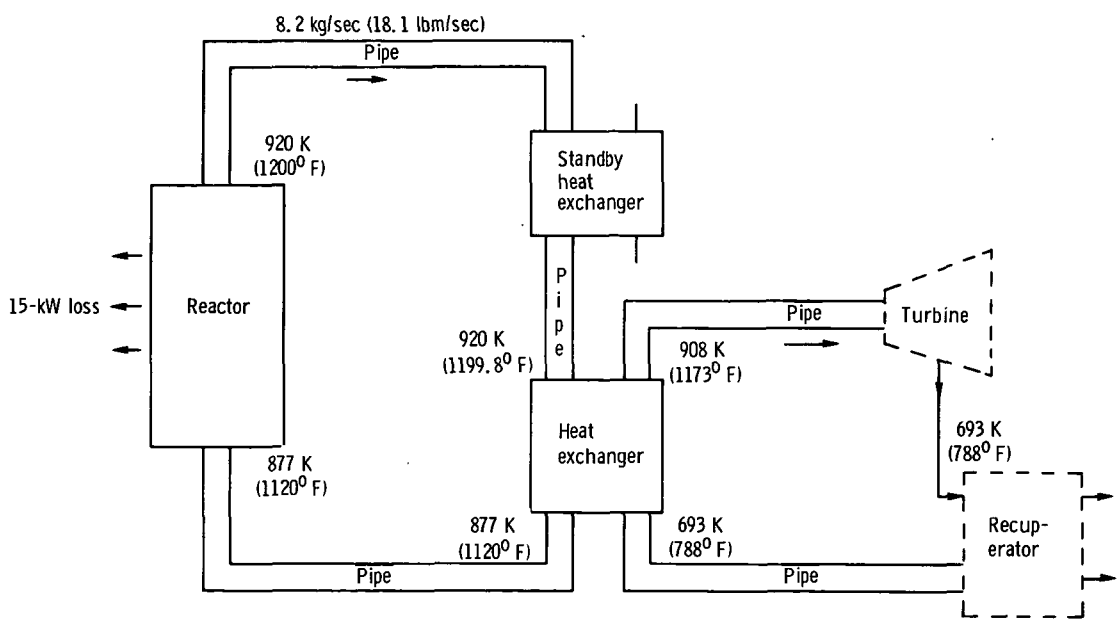

Figure 3. - Simulation schematic.

included the reactor, the Brayton heat source heat exchanger and the standby Brayton heat source heat exchanger. Pipe line delays in the NaK loop were simulated, but the pipe heat capacity was neglected because it was small compared to the NaK heat capacity. Pipe line delays in the gas loop including the effects of pipe heat capacity were simulated.

The turbine and recuperator do not directly influence reactor dynamics. They were therefore represented by extremely simple models. The outlet temperature from the turbine was approximated by a linear function of turbine inlet temperature. The temperature out of the recuperator (going to the heat source heat exchanger) was assumed to follow the turbine outlet temperature (minus a small ΔT) as a first-order lag. These approximations yielded results sufficiently similar to the results of a more detailed gas loop simulation to justify their use in this study of reactor transients.

Because the cold wall has considerable thermal mass, the temperature changes of the auxiliary loop occur too slowly to significantly influence the scram transients. This loop was not simulated, although a power loss to the cold wall (proportional to reactor power) was simulated.

The reactor model was the most important part of the system model for the transients studied. The method of simulation is described briefly hereinafter. Further details of the reactor model are presented in appendix A. A block diagram of the reactor model is shown in figure 4.

The reactor model included: (1) a calculation of excess reactivity as a function of temperature and control drum position, (2) a simulation of reactor power dynamics including six delayed neutron groups, (3) a sinusoidal distribution of reactor power axially within the core, (4) first-order lag representations of the thermal capacities of

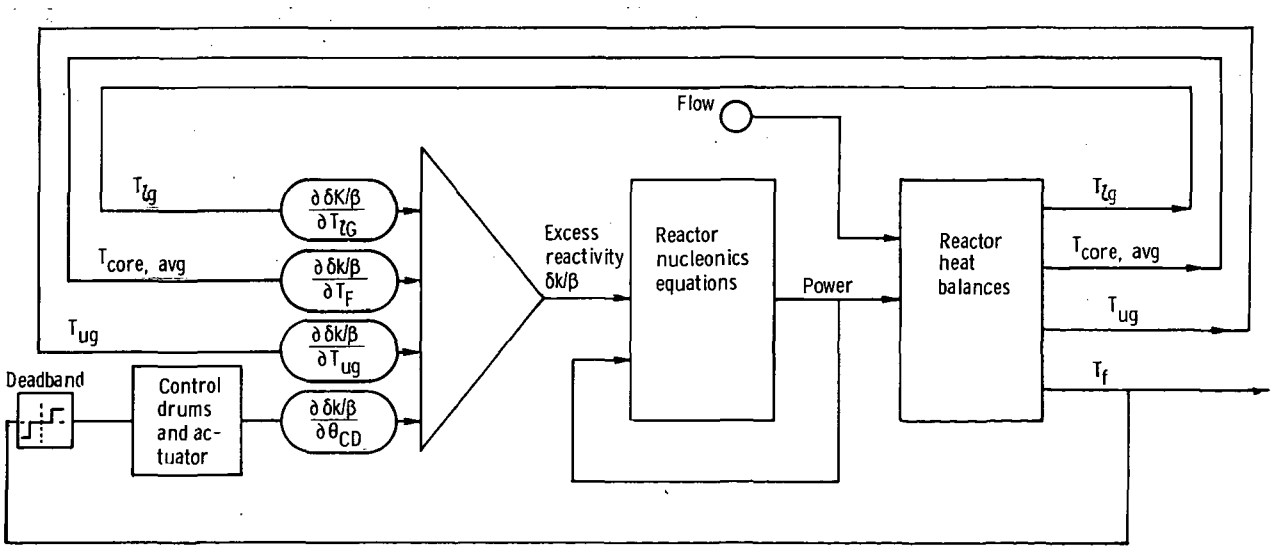

Figure 4. - Block diagram of reactor simulation.

the manifolds, plenums, and grid plates, (5) a 20-lump simulation (along the flow direction) representing the heat transfer dynamics in the core, and (6) a model of reactor decay heat following shutdown. Conduction of heat along the flow axis was neglected.

The heat source heat exchanger model was a 10-lump representation of heat transfer dynamics. NaK, metal, and gas temperature were computed for each lump. The NaK and metal temperature computations included the effect of heat energy storage within the heat exchanger. The computed gas temperature distribution did not account for heat storage because very little energy is stored in the gas.

The initial system conditions (approximately the design conditions) prior to simulated system malfunction are shown in the schematic in figure 3. Initial reactor power was 336 kilowatts. This includes a 15-kilowatt loss from the control drums to the cold wall and a 3-kilowatt radiation loss from the NaK piping. Design reactor coolant flow and gas flow were 8.1 and 2.8 kilograms per second (18.1 and 6.3 lbm/sec), respectively. Constants used in the simulation such as heat capacities, heat transfer coefficients, inventories, and so forth are listed in appendix B.

REACTOR CONTROL AND EMERGENCY SHUTDOWN

Normal Control

During normal reactor operation, the reactor coolant outlet temperature is within a range (deadband) of 913 to 933 K (1185° to 1220° F). Moderate disturbances, such as long-term fuel depletion, cause the coolant temperature to drift outside of this temperature range. If the temperature drifts below 913 K (1185° F), a neutron reflector control drum is stepped slightly inward. This causes reactor power to increase. The increased power causes reactor coolant outlet temperature to increase. If the outlet temperature has not returned to the deadband range after 1 minute, drum steps continue at 1 minute intervals. Likewise, if the outlet temperature drifts above 933 K (1220° F), the control drums are stepped outward. The reactivity worth of each control drum step is between 0.5 and 1.3 cents per step. The step worth depends on the angular position of the control drums. A worth of 0.5 cent per step was used for the computer transients reported herein.

Emergency Shutdown

When system variables exceed certain design limits, an emergency shutdown (scram) occurs. The emergency control steps the reflector drums outward at 200 steps per minute. The rate of reactivity decrease is between 1 and 2.6 dollars per minute de-

pending on control drum worth. The emergency shutdown can be initiated by (1) loss of reactor coolant flow (to a value less than ≈50 percent of design), (2) reactor power being too high (≈25 percent above design), or (3) reactor outlet temperature being too high (≈20 K or 30° F above the upper deadband limit).

The following procedure was used in running the shutdown transients on the computer:

(1) The runs started with the system operating at steady state with approximately design conditions. Some runs started with the outlet temperature at the middle of the deadband range, 921 K (1200° F). Other started with it at the top, 933 K (1220° F).

(2) The malfunctions were simulated as follows:

(a) Loss of reactor coolant flow: one second ramp in flow from the design value, 8.2 kilograms per second (18.1 lbm/sec), to the final value (usually 1 percent of design).

(b) Loss of gas flow: one second ramp in flow from the design value, 2.9 kilogram per second (6.3 lbm/sec), to the final value (usually 1 percent of design).

(c) Turbine overspeed: the increase of gas flow rate following turbine overspeed was computed using the separate gas loop simulation. The time history of gas flow from that run was used as an input for the reactor shutdown transient run.

(d) Reactivity insertion error: one of the eight control drums rotates inward at its fastest possible rate (usually one step every 0.04 min, 12.5 cents/min). This fastest rate is built into the control drum system. The scram rate is eight times this fastest rate because there are eight control drums.

Key system variables, such as reactor power and temperatures, were studied to determine if the transient would have exceeded reactor design limits.

RESULTS AND DISCUSSION

Peak fuel temperature and temperature rise across the reactor were used to evaluate the effect of the four types of malfunctions on the reactor. Peak fuel temperatures above 1033 K (1400° F) and temperature rise across the reactor greater than 56 K (100° F) were considered to be too severe; that is, damage to the reactor might result.

Loss of Primary Coolant Flow

For the coolant flow malfunction, primary loop flow was ramped from design flow to 1 percent of design in 1 second. The simulated controller went into the scram mode when the primary coolant flow dropped below 50 percent of its design value. Also, the

gas flow was stepped from its design value to 0.1 percent of design when the scram began. Plots of reactor transients resulting from loss of coolant flow are shown in figures 5 to 8.

A run, starting at the top of the reactor outlet temperature deadband (i.e., 933 K or 1220° F) and using the proposed scram rate of 200 steps per minute, is plotted in figure 5. Reactor temperatures increase because the coolant flow loss occurs much faster than the loss of reactor power. The peak fuel temperature shown is for the hottest of the axial core lumps. This represents an average of the actual radial and circumferential temperature distribution that would exist at that axial location. (Because of this distribution, the maximum fuel temperature would be somewhat higher than the plotted peak fuel temperature.) It is seen in figure 5 that the plotted peak fuel temperature reaches almost 1150 K (1600° F) during the transient. This value is, however, well above the recommended 1033 K (1400° F) design limit, but not so severe that the core would be destoyed. The ΔT across the reactor reaches about 246 K (442° F). This is over four times the recommended maximum ΔT across the core of 56 K (100° F) and about 25 percent above the design values for the earlier reactors S8ER and S8DR. A rough hand calculation of the rate of axial conduction through the NaK indicates that the ΔT would be excessive even if axial conduction had been included in the simulation. Thus, damage to the reactor, such as fuel element cracking, might occur.

Three possible methods for making the transient less severe were investigated. These methods were: (1) increasing the scram rate, (2) maintaining 10 percent of coolant flow, and (3) maintaining gas flow for as long as possible. Runs using each of the three methods are discussed in the following three sections.

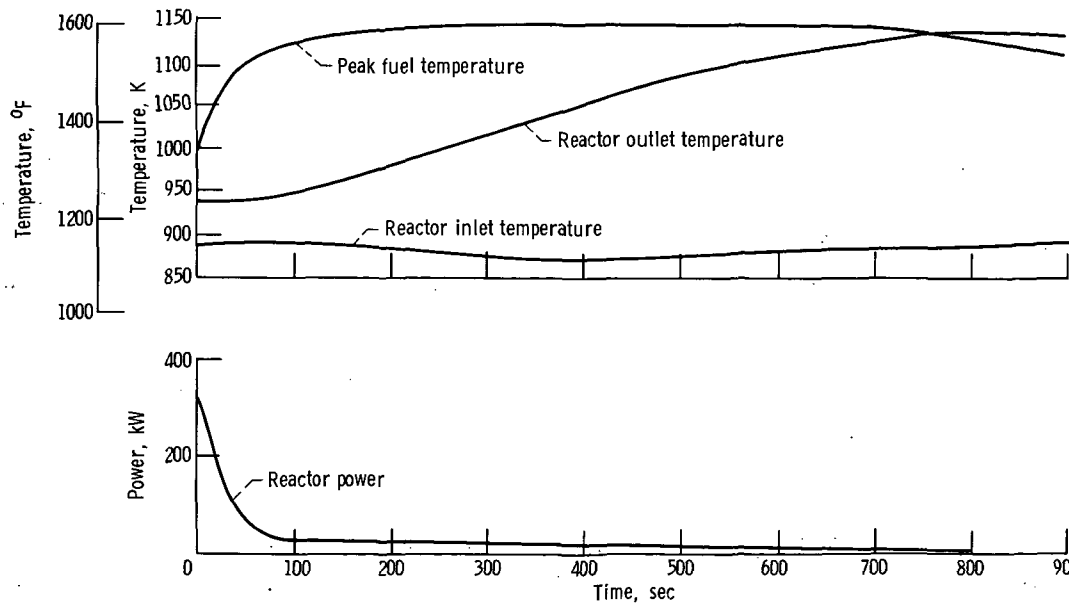

Figure 5. - Loss of primary coolant flow (flow ramped from design to 1 percent of design during first second).

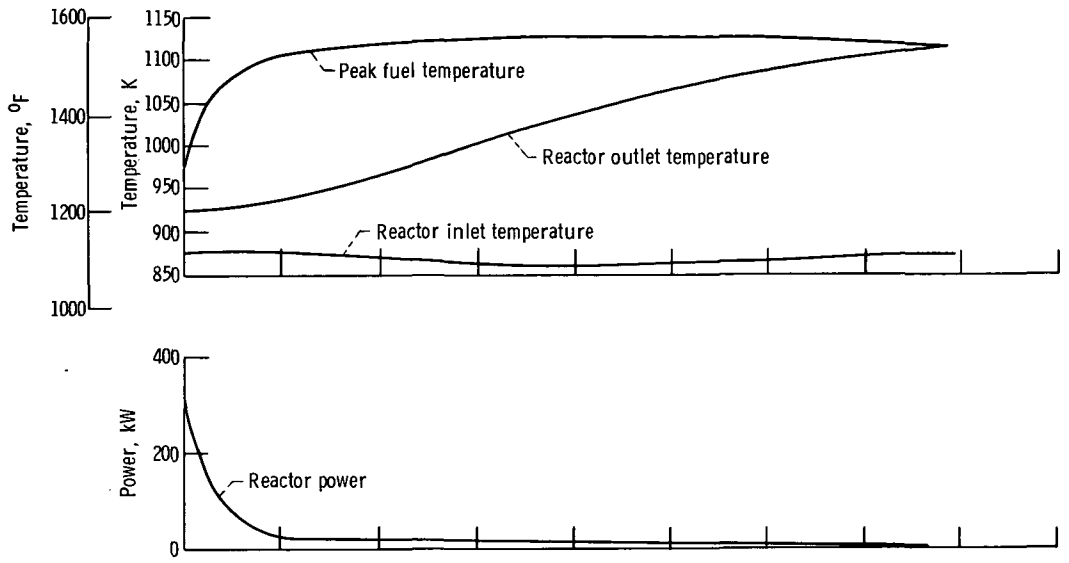

(a) Scram rate, 200 steps per minute.

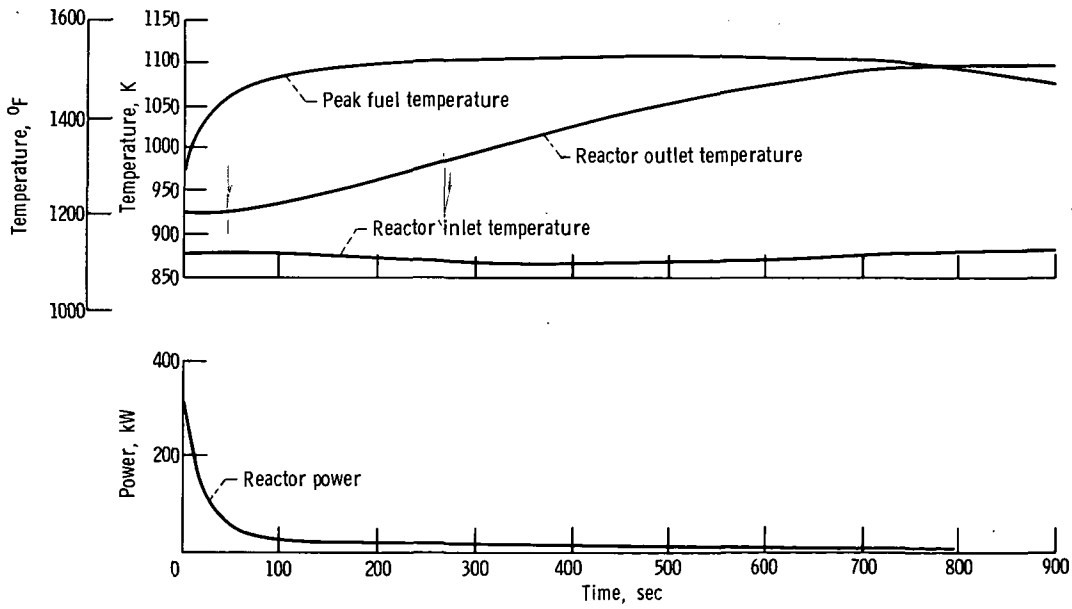

(b) Scram rate, 400 steps per minute.

Figure 6. - Effect of scram rate on loss of primary coolant flow malfunction. (Flow ramped from design to 1 percent of design during first second.)

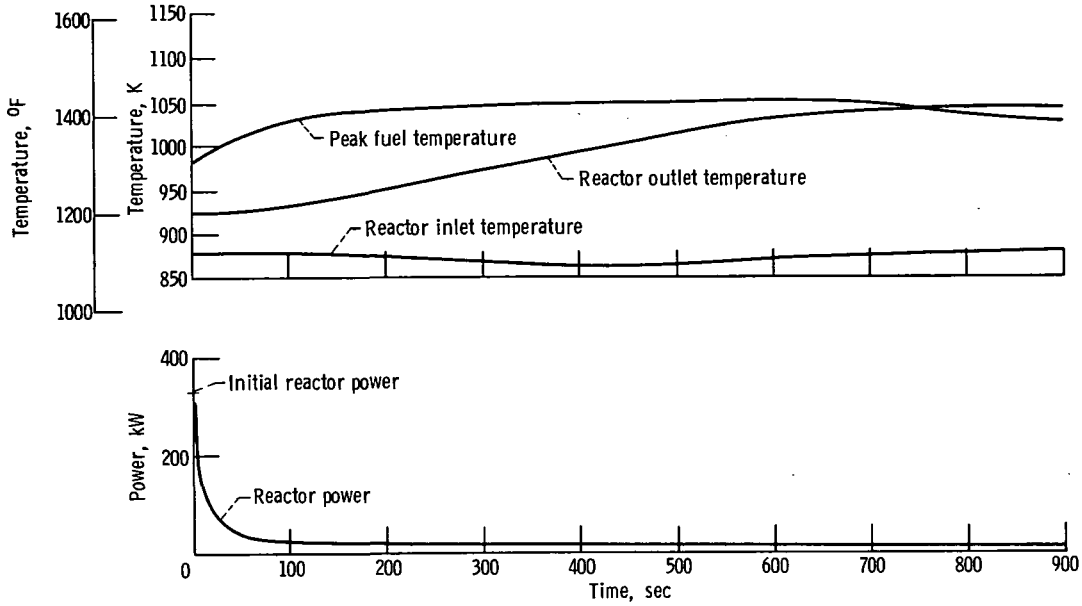

(c) Instantaneous scram.

Figure 6. - Concluded.

Effect of scram rate. - Three computer runs were made with different scram rates. For these runs, the reactor outlet temperature starts at the center of the deadband range, 921 K (1200° F). The results in figure 6(a) show the effect of the proposed scram rate of 200 steps per minute. The peak fuel temperature reached a maximum of of 1125 K (1565° F) and the ΔT across the reactor reached a maximum of 242 K (435° F). The results in figure 6(b) show the effect of a scram rate of 400 steps per minute. This is double the proposed scram rate. The peak fuel temperature reached a maximum of 1100 K (1520° F) and the ΔT across the reactor reached 214 K (385° F). The results in figure 6(c) show the effect of an instantaneous scram. After the scram, the reactor power follows the decay heat curve shown in figure 15 and discussed in appendix A. The peak fuel temperature reached a maximum of 1047 K (1425° F) and the ΔT across the reactor reached 167 K (300° F). The transients are made significantly less severe by increasing the scram rate. But, even when an instantaneous scram is assumed, both design limits are exceeded and the maximum ΔT across the reactor is three times the design limit.

Effect of maintaining partial coolant flow. - A redundant short-term reactor coolant system could avoid complete loss of coolant flow. A pressurized reservoir could maintain some flow even if the loss of flow was due to a leak in the reactor coolant system. The run plotted in figure 7 started at design conditions with the outlet temperature at the center of the deadband range. The coolant flow dropped below 50 percent initiating a scram (200 steps/min) and the gas flow was stepped to 0.1 percent of design. After 1 second the coolant flow reached 10 percent and stopped decreasing. The peak fuel

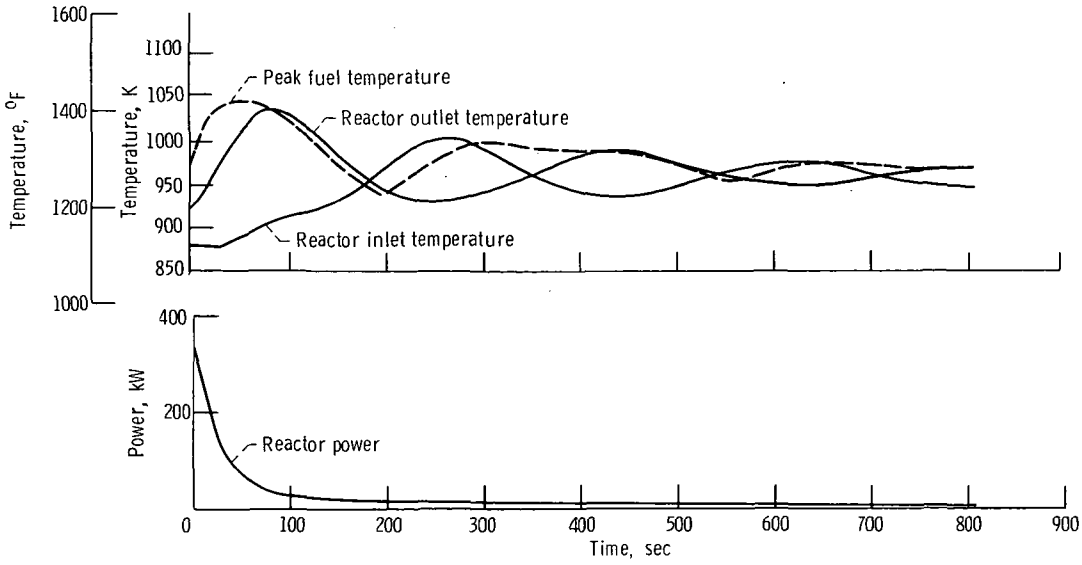

Figure 7. - Loss of primary coolant flow to 10 percent of design value. (Flow ramped from design to 10 percent of design during first second.)

temperature during the simulated transient was 1047 K (1425° F) and the maximum ΔT across the reactor was 131 K (235° F). The temperature transients plotted in figure 7 suggest that maintaining flow at 10 percent would be a help in reducing maximum fuel temperature and reactor ΔT. However, both temperature limits are exceeded and reactor ΔT is still more than twice the design limit. Further improvement could be obtained by supporting the coolant flow at some higher percent of the design value. Also some combination of increased scram rate and higher support level of flow might be desirable.

Effect of gas flow shutoff time. - The computer runs previously discussed assumed that the gas flow stepped to 0.1 percent of design when the scram began. The run plotted on figure 8 assumed that the gas flow continues at 100 percent until the turbine inlet temperature drops below 644 K (700° F). Below this temperature, the gas flow is not self-sustaining and the gas loop flow is assumed to step to zero. Maintaining gas loop flow did not reduce the maximum peak fuel temperature as compared with figure 6(a) and made the reactor ΔT much worse. The peak temperature was not reduced for the following reason. At 1 percent coolant flow, the fluid transport time from the heat exchanger outlet to the reactor core inlet is approximately 650 seconds. Most of this transport time is spent in the inlet manifold and inlet plenum. The maximum peak fuel temperature occurs 380 seconds after the start of the transient. This maximum temperature occurred before the effect of having maintained gas flow reached the core. With 10 percent primary flow as in figure 7, the transport time is reduced to 65 seconds. But, the maximum peak fuel temperature occurs 50 seconds after the start of the transient; thus, even with the 10 percent flow, maintaining gas flow would not reduce this temperature.

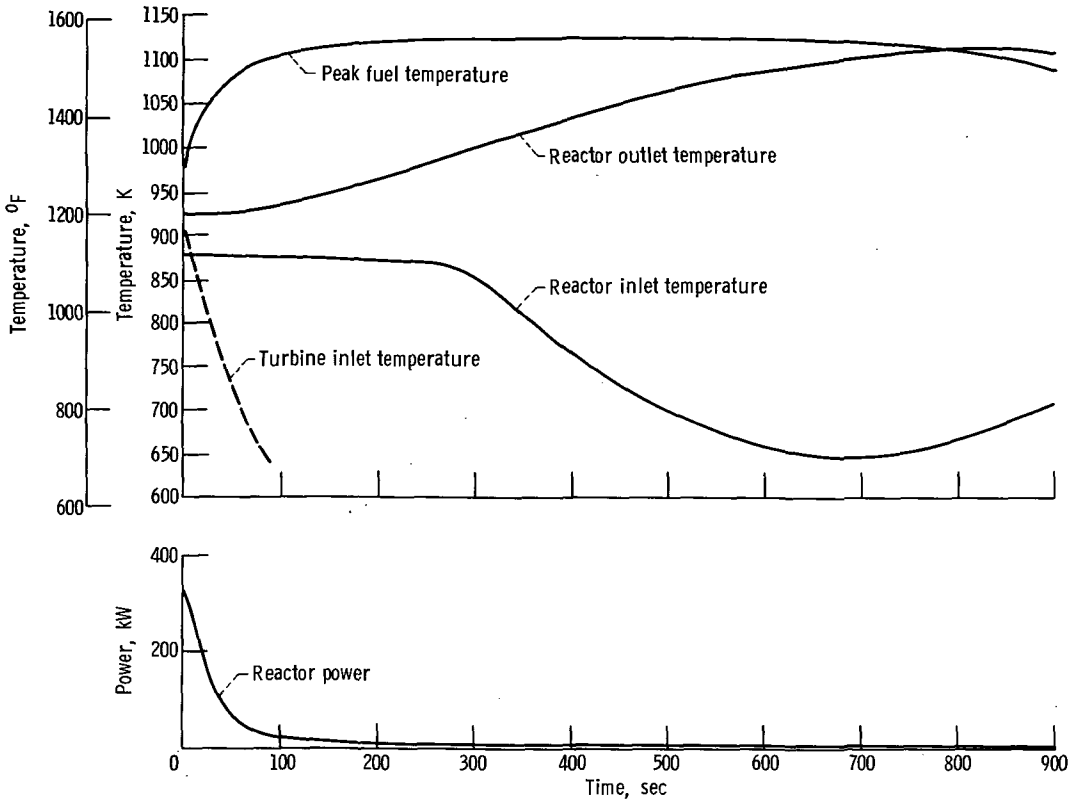

Figure 8. - Loss of primary loop coolant flow with gas flow maintained at design until turbine inlet temperature drops to 644 K (700° F), then stepped to zero.

Loss of Gas Flow

Gas flow is ramped from design to 1 percent of design in 1 second. The gas turbine normally provides the power for the primary loop NaK pump. To prevent gas flow loss from also stopping reactor NaK coolant flow, the pump is automatically switched to battery power when turbine speed decreases. The results plotted in figure 9 show that reactor power decays fairly rapidly even with no scram. The peak fuel temperature reaches a maximum of 994 K (1330° F). This is well below the design limit of 1033 K (1400° F). The reactor ΔT decreases from its initial value of 44 to 0 K (80° to 0° F) at 250 seconds. It is, therefore, not necessary to scram the reactor if gas flow is lost.

Turbine Overspeed

Turbine overspeed could result from loss of alternator electrical load. The effect of turbine overspeed is to increase gas flow. As the flow increases the heat energy absorbed by the gas from the heat source heat exchanger increases. This heat energy

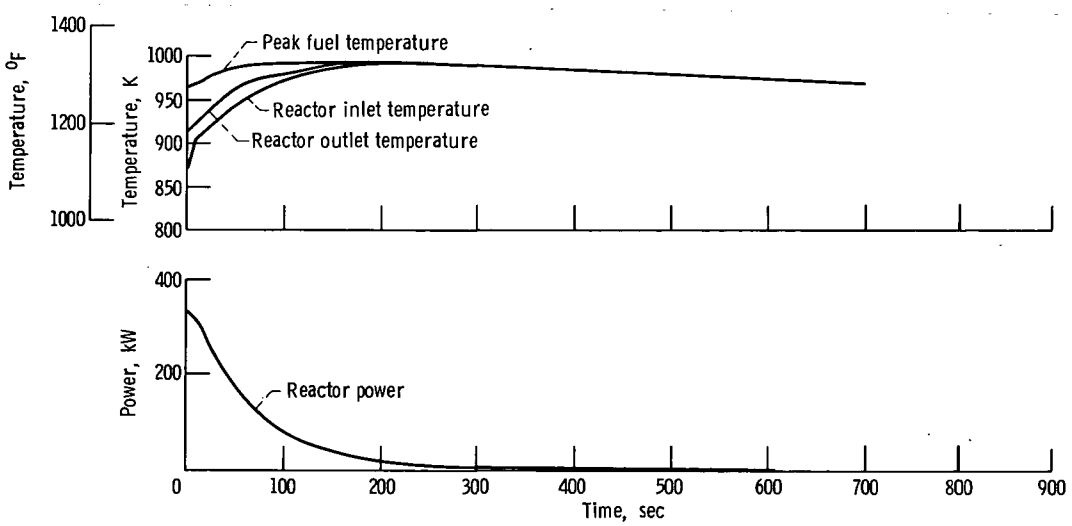

Figure 9. - Loss of gas flow. (Gas flow ramped from design to 1 percent of design during first second. Reactor was not scrammed.)

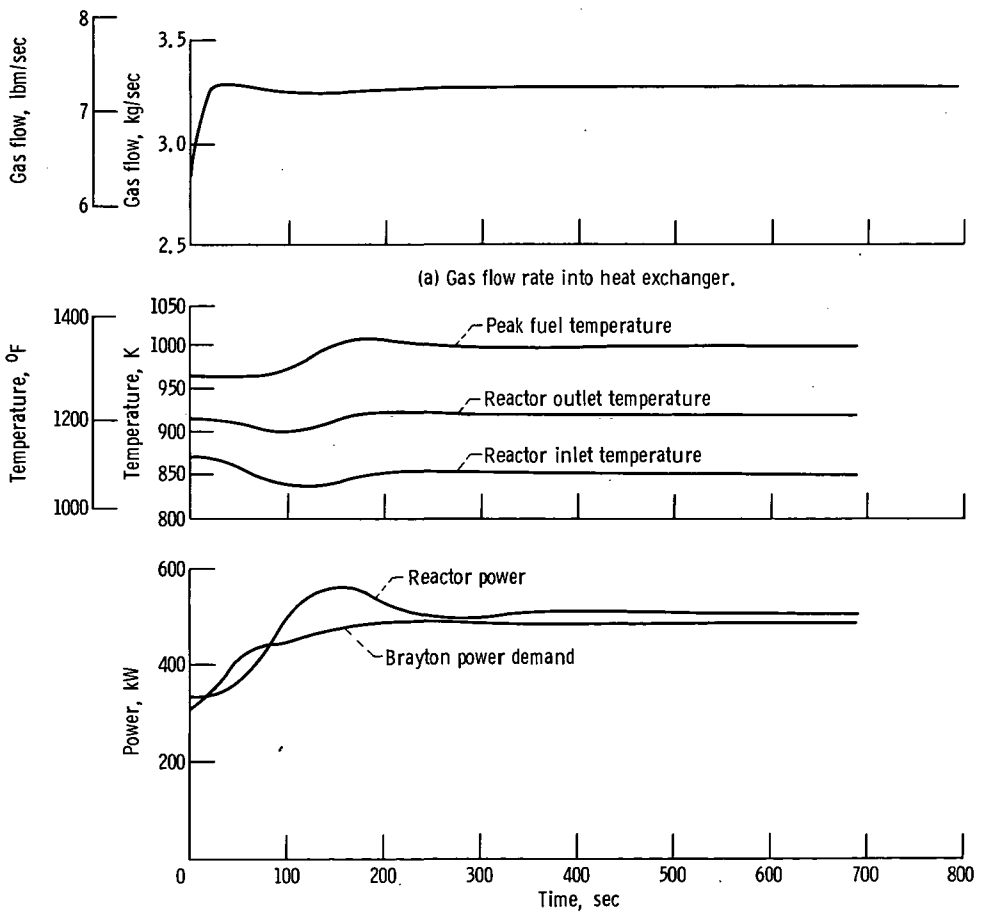

(a) Gas flow rate into heat exchanger.

(b) Reactor transients when initial reactor outlet temperature is 914 K (1185° F).

Figure 10. - Effect of turbine overspeed on reactor.

is called the Brayton power demand. A computer transient representing turbine overspeed due to loss of electrical load was generated using a detailed digital model of the gas loop. The steady-state speed with no electrical load was too low to cause turbine failure. The gas flow transient from this run is shown in figure 10(a). This transient was used as input to the reactor Brayton digital simulation.

The effects of this input on reactor temperatures and power are shown in figure 10(b). The reactor outlet temperature was initially near the lower deadband limit of 914 K (1185° F). The maximum peak fuel temperature reached during the computer run is 1005 K (1350° F). The reactor ΔT reached a maximum of 72 K (130° F) at 160 seconds and settled out at 68 K (122° F). The steady-state value of reactor ΔT in the overspeed condition was is excess of the design limit but in a range the reactor could tolerate for the times involved.

Reactivity Insertion Error

The reactivity insertion error studied consisted of stepping one drum inward (increasing reactivity) at its scram rate (25 steps/min). This is one-eighth of the overall scram rate because there are eight drums. The assumed control drum worth was 0.5 cent/step. The simulated reactor was scrammed (200 steps/min) when the power reached 550 kilowatts. Three reactivity insertion error computer runs are shown in figures 11 to 13.

The transient on figure 11 assumed that gas flow remained at design until the turbine inlet temperature dropped to 644 K (700° F). The flow went to zero when the temperature went below 644 K (700° F). Peak fuel temperature reached a maximum of 1022 K (1380° F) and reactor outlet temperature reached a maximum of 950 K (1250° F). Maximum reactor ΔT was equal to the safety limit of 56 K (100° F) and occurred at approximately 80 seconds.

The computer run on figure 12 was generated to determine the effect of doubling the scram rate to 400 steps per minute. As the maximum reactivity insertion rate for one drum is one-eighth of the scram rate, the insertion rate for the inward stepping drum was also doubled (to 50 steps/min). The 550-kilowatt scram limit was reached quicker and the maximum temperatures are lower than for the run of figure 11. The maximum reactor ΔT was again equal to the safety limit of 56 K (100° F) but occurred sooner - at 50 seconds. The peak fuel temperature reached a maximum of 1008 K (1355° F). The maximum reactor outlet temperature was 938 K (1230° F).

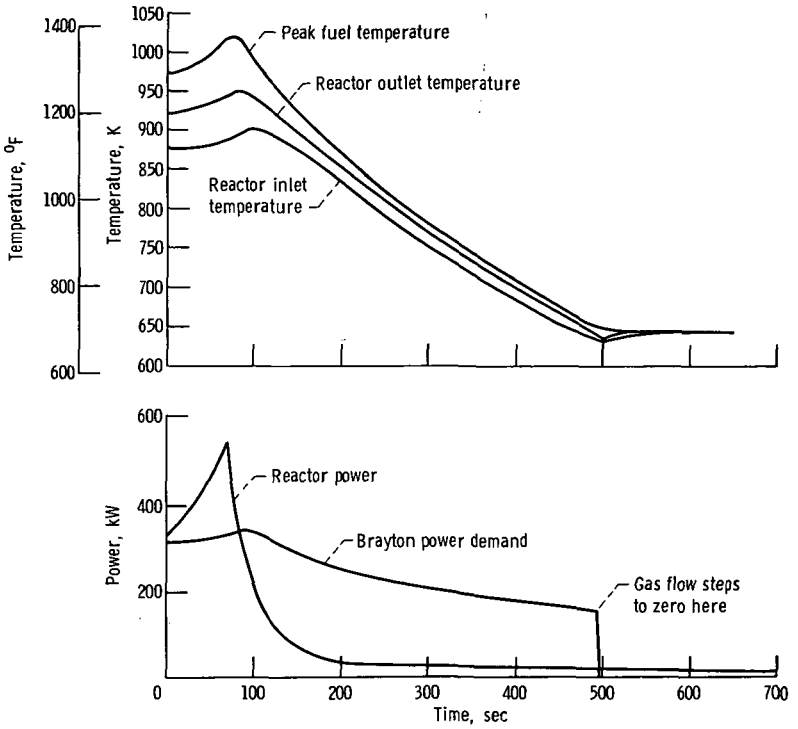

Figure 11. - Reactivity insertion malfunction. Reactor scrammed 200 steps per minute when power reaches 550 kilowatts. (Gas flow steps to zero when turbine inlet temperature falls to 644 K (700° F).)

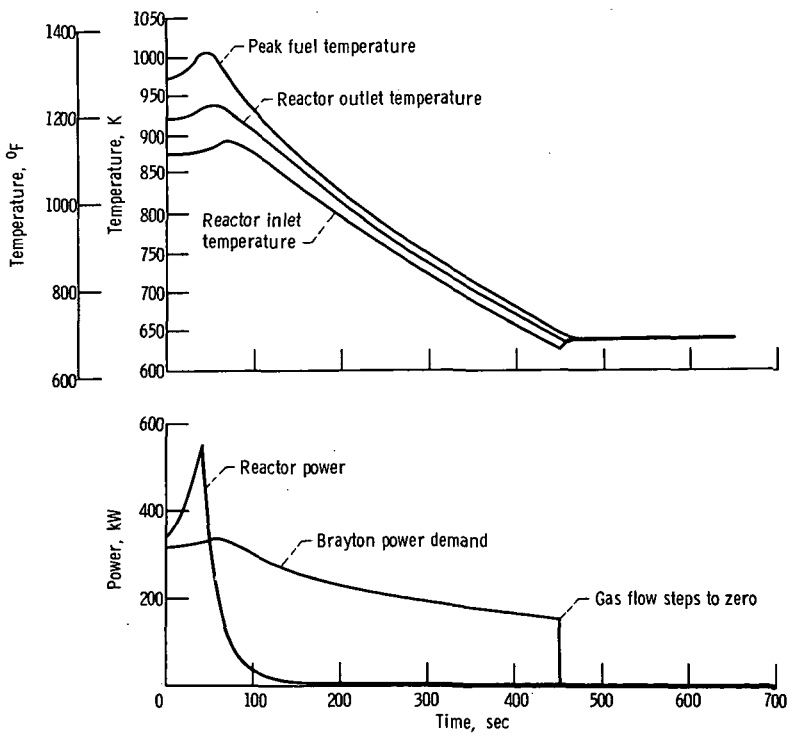

Figure 12. - Scram rate of 400 steps per minute. (Gas flow steps to zero when turbine inlet temperature falls to 644 K (700° F).)

The computer run on figure 13 assumed that the malfunctioning control drum continued to step inward after the scram began. During the scram, reactivity was removed at six-eighths of the normal scram rate, because seven drums were stepping outward and one was stepping inward. The maximum peak fuel temperature was 1027 K (1390° F). This is only 5 K (10° F) higher than the run in figure 11. Reactor ΔT was again about 56 K (100° F) at 80 seconds. Comparison of these two runs shows that it makes very little difference whether or not the drum continues to malfunction after the scram begins.

These reactivity insertion runs show that the reactor can be protected against reactivity insertion from one malfunctioning control drum. Marginally adequate protection consists of a scram limit of 550-kilowatt power and a scram rate of 200 or 400 steps per minute. Other scram rates and lower reactor power scram limits might pro-

These reactivity insertion runs show that the reactor can be protected against reactivity inseriton from onw malfunctioning control drum. Marginally adequate protection consists of a scram limit of 550-kilowatt power and a scram rate of 200 or 400 steps per minute. Other scram rates and lower reactor power scram limits might provide more protection.

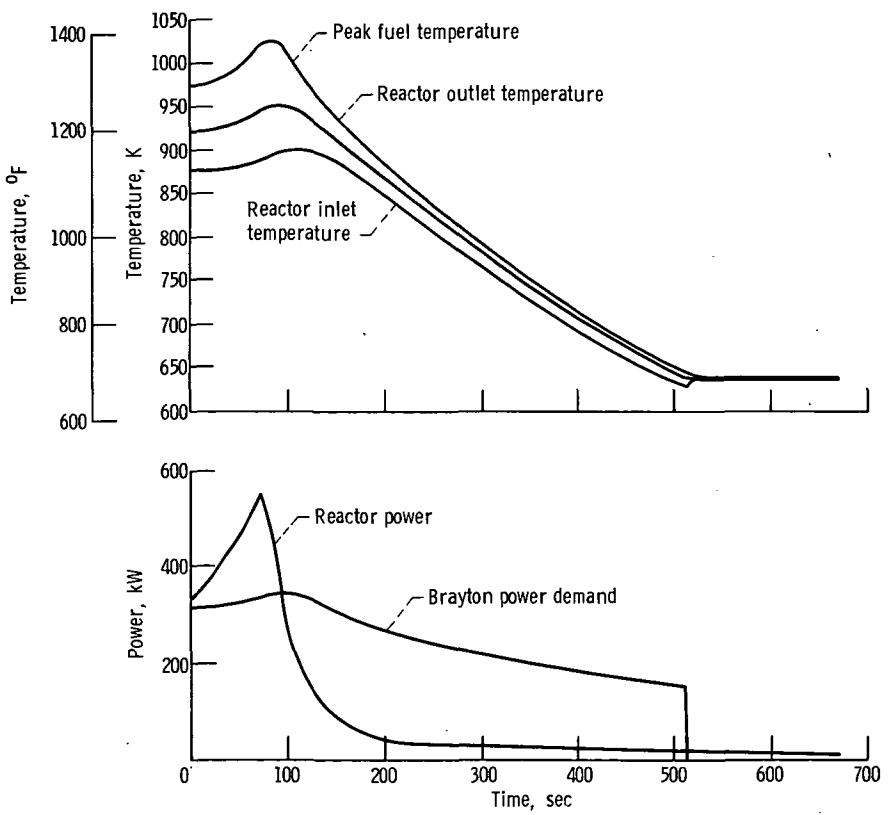

Figure 13. - Reactivity insertion malfunction. Drum continues to malfunction during scram. (Gas flow steps to zero when turbine inlet temperature falls to 644 K (700° F).)

CONCLUSIONS

Of the malfunctions studied, loss of reactor coolant flow imposed the most severe transient conditions upon the reactor; for such a malfunction some damage such as fuel element cracking might occur. The other malfunctions considered should not damage the reactor.

With loss of coolant flow to 1 percent of design and use of the proposed scram rate, the reactor would exceed the peak fuel temperature and reactor ΔT design limits by a wide margin. Two methods found to moderate the transients at the reactor for this malfunction were: (1) increasing the scram rate and (2) supporting the coolant flow at some percent of design flow. Supporting the flow at 10 percent of design was about as effective as an instantaneous scram of the reactor in reducing peak fuel temperature. However, both peak fuel temperature and reactor ΔT design limits were exceeded with flow maintained at 10 percent of design and reactor ΔT was still more than twice the design limit. Sudden loss of gas flow appeared tolerable for the reactor even with no scram. The core temperature transients resulting from the turbine overspeed malfunction were not a problem but reactor ΔT did settle out 20 percent higher than the design limit in the overspeed condition; this should not be a problem unless the overspeed condition continues for an extended period of time. The core temperature transients resulting from the reactivity insertion malfunction were controlled satisfactorily by use of the proposed scram procedure. However, the maximum reactor ΔT was about equal to the design limit for the three reactivity insertion runs made.

Lewis Research Center,
National Aeronautics and Space Administration,
Cleveland, Ohio, October 25, 1973,
502-25.

APPENDIX A

REACTOR SIMULATION

The mathematical model of the reactor can be divided into two sets of equations:

(1) The reactor kinetics equations which describe the total rate of heat generation in the fuel (power).

(2) The solid and liquid heat balances.

An additional decay heat equation is used to describe the decay of power after shutdown of the reactor. A block diagram for the simulation is shown in figure 4. Each of the two sets of equations and the decay heat equation are discussed in turn.

Reactor Kinetics Equation

The basic kinetics equations used in the simulation are the following:

$$\frac{dC_i}{dt} = \frac{\beta_i N}{l^*} - \lambda_i C_i \tag{A1}$$

$$\frac{dN}{dt} = \frac{\beta N\left(\frac{\delta k}{\beta} - 1\right)}{l^*} + \sum_{i=1}^{6} \lambda_i C_i \tag{A2}$$

$$\frac{\delta k}{\beta} = \underbrace{\left.\frac{\partial \frac{\delta k}{\beta}}{\partial T_{lg}}\right|_{dp} \Delta T_{lg}}_{\text{Lower grid plate}} + \underbrace{\left.\frac{\partial \frac{\delta k}{\beta}}{\partial T_f}\right|_{dp} \Delta T_f}_{\text{Fuel}} + \underbrace{\left.\frac{\partial \frac{\delta k}{\beta}}{\partial T_{ug}}\right|_{dp} \Delta T_{ug}}_{\text{Upper grid plate}} + \underbrace{\left.\frac{\partial \frac{\delta k}{\beta}}{\partial \theta_{cd}}\right|_{dp} \Delta \theta_{cd}}_{\text{Control drum}} \tag{A3}$$

The majority of the neutrons are produced instantaneously and are referred to as prompt neutrons. However, a small proportion of the fissions produce isotopes which decay and release neutrons after a delay period which ranges in length from 0.3 to about 100 seconds. These neutrons are called delayed neutrons. There are six major groups of delayed neutron precursors. The concentration of the six groups is defined by equation (A1).

Equation (A2), which determines the rate of increase of neutron flux, illustrates the importance of the delayed neutrons. During normal reactor operation $\delta k/\beta$ is less

than one, and sustained reactor operation depends on the release of the delayed neutrons. Because the precursors of the delayed neutrons have long half lives, changes of reactor power occur gradually.

The effect of the control drums and reactor temperatures on excess reactivity is represented by equation (A3). Excess normalized reactivity $\delta k/\beta$ is representative of the proportion of neutrons produced in excess of the number required to sustain exactly the nuclear reaction. When $\delta k/\beta$ is positive, power is usually increasing; when it is negative, power is usually decreasing. The reactor partials of excess reactivity with respect to temperature are negative. This causes the reactor to be inherently stable, because increasing temperatures decrease excess reactivity which decreases power and causes temperatures to stop increasing. Likewise decreasing temperatures tend to cause power to rise. A discussion of reactor nucleonics is presented by Glasstone (ref. 2).

Equations (A1) and (A2) were modified slightly to permit efficient simulation on the digital computer. In equation (A2) the time constant τ of the prompt neutrons is $l^*/[\beta(1-\delta k/\beta)]$. If $\delta k/\beta \leq 0.65$ dollar (which was a safe assumption in this study since $\delta k/\beta$ was usually negative), then

$$\tau = \frac{l^*}{\beta\left(1 - \frac{\delta k}{\beta}\right)} \leq \frac{5.7\times10^{-6}\ \text{sec}}{0.0077\ (1 - 0.65)} = 2.6\times10^{-3}\ \text{sec}$$

This time constant is much smaller than the other time constants of the system. The prompt neutron time constant was, therefore, assumed to be zero and equation (A2) was simplified to

$$\frac{\beta N\left(\frac{\delta k}{\beta} - 1\right)}{l^*} + \sum_{i=1}^{6} \lambda_i C_i = 0 \tag{A4}$$

The following definition was used to simplify the equations:

$$D_i = \frac{P_N}{N}\frac{l^*}{\beta}\lambda_i C_i \tag{A5}$$

Using this definition, equations (A1) and (A4) become

$$\frac{dD_i}{dt} = \lambda_i \frac{\beta_i}{\beta} P_N - \lambda_i D_i \tag{A6}$$

$$P_N = \frac{1}{1 - \frac{\delta k}{\beta}} \sum_{i=1}^{6} D_i \tag{A7}$$

Equations (A6) and (A7) are easier to inplement than equations (A1) and (A2) because the prompt time delay l^* and the ratio of power to neutron flux P_N/N have been eliminated.

Heat Balances

Core. - The core is divided axially into 20 sections as shown in figure 14.

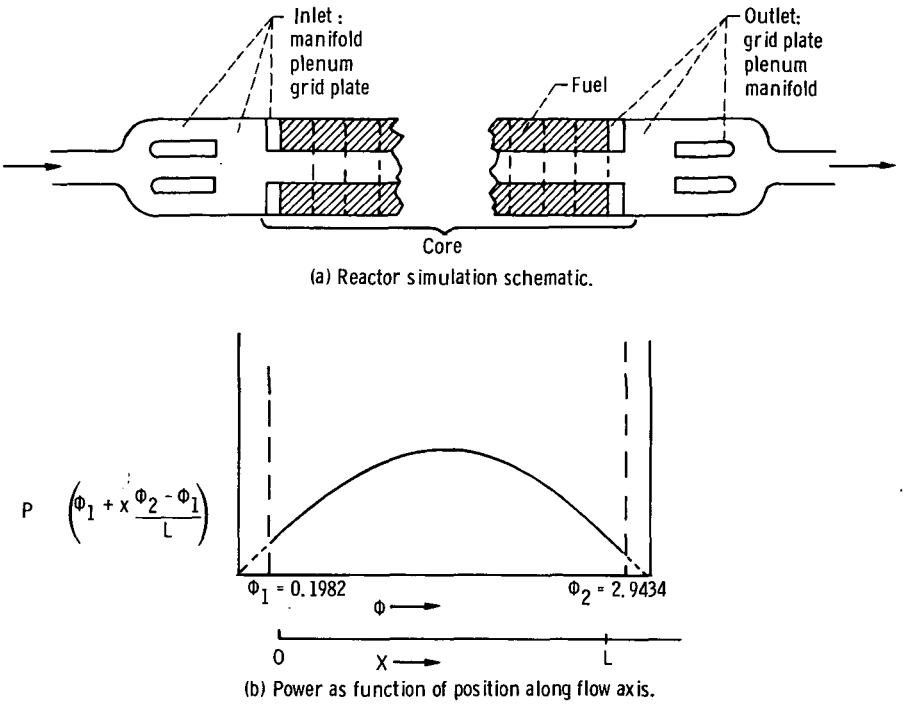

Figure 14. - Reactor heat balance schematic.

Average fuel temperatures are computed for each of 20 "lumps." NaK coolant temperatures are computed at each of 21 nodes. The following equations were used to update the coolant and fuel temperatures:

$$\Delta T_c(K) = [T_f(K) - T_c(K)]\left(1 - e^{-h_c A_c \tau_c / w_c C_c}\right) \tag{A8}$$

$$T_c(K+1) = T_c(K) + \Delta T_c(K) \tag{A9}$$

$$\frac{dT_f(K)}{dt} = \left[\frac{Px(K)}{M_f G_f}\right](P - P_R) - \Delta T_c(K)\frac{w_c C_c}{M_f G_f} \tag{A10}$$

Equation (A8) computes the change of temperature of a point in the fluid as it flows past a core lump. Equation (A9) updates the nodal fluid temperatures each time the fluid moves from one node to the next. Equation (A10) computes the rate of change of each fuel lump temperature based on a heat balance of the internal power generation and the heat flow to the coolant. Equation (A10) is integrated to update the fuel lump temperatures every computer time step where P is total reactor power as a function of time, P_R represents 15 kilowatts of heat radiated to the cold wall, and $Px(K)$ is the portion of total reactor power allocated to the Kth lump. $Px(K)$ is evaluated by the following equation (A11) and illustrated in figure 13(b). This equation represents a chopped sine distribution of power.

$$Px(K) = \frac{\cos\dfrac{0.1982 + 2.7452\,(K-1)}{NL} - \cos\dfrac{0.1982 + 2.7452\,K}{NL}}{\cos(0.1982) - \cos(2.9434)} \tag{A11}$$

Grid plates. - The grid plates support the fuel rods. They are shown in figure 13(a) at the ends of the fuel core. The equations for the grid plate coolant and for the grid plate are the following:

$$T_{gp,out} = T_{gp} + (T_{gp,in} - T_{gp})\,e^{-h_{gp}A_{gp}/w_c C_c} \tag{A12}$$

$$\frac{dT_{gp}}{dt} = w_c C_c \frac{(T_{gp,in} - T_{gp,out})}{M_{gp} C_{gp}} \tag{A13}$$

Equation (A12) computes the change of temperature of a point in the fluid as it flows through the grid plate. The grid plate is assumed to have high heat conductivity and, therefore, to have a uniform temperature. Time variations of the grid plate temperature are computed by integrating equation (A13). This equation represents a heat balance between the grid plate and the coolant.

Plenums and manifolds. - There are two plenums and two manifolds. The relative locations of these four regions with respect to the reactor core is shown in figure 14(a). The temperature in each region was assumed to be uniform. Incoming flow was assumed to mix perfectly with the fluid within the region. The equations for the plenums and manifolds are the following:

$$\frac{dT_{pl}}{dt} = (T_{pl,in} - T_{pl}) \frac{w_c}{M_{pl}} \tag{A14}$$

$$\frac{dT_{man}}{dt} = (T_{man,in} - T_{man}) \frac{w_c}{M_{man}} \tag{A15}$$

Time variations of the plenum and manifold temperatures are computed by integrating equations (A14) and (A15).

Decay Heat Equation

Two forms of decay heat equation were used in the reactor simulation. The first form (eq. (A16)) was used to describe the decay of power during a normal scram.

$$P = P_N + (P_{initial} - P_N) \frac{1}{(t + 1)^{0.58}} \tag{A16}$$

This equation represents the assumed effect of the decay heat in preventing power from decreasing as fast as the nucleonics equations (A6) and (A7) would allow.

The second form of the decay equation is for the instantaneous scram. This equation assumes excess reactivity goes to minus infinity at time 0. P_N from equation (A7) would, therefore, go to zero at time 0. The following equation is derived by setting P_N in equation (A16) to zero:

$$P = P_{initial} \frac{1}{(t + 1)^{0.58}} \tag{A17}$$

When initial power is 336 kilowatts, equation (A17) describes the curve shown in figure 15.

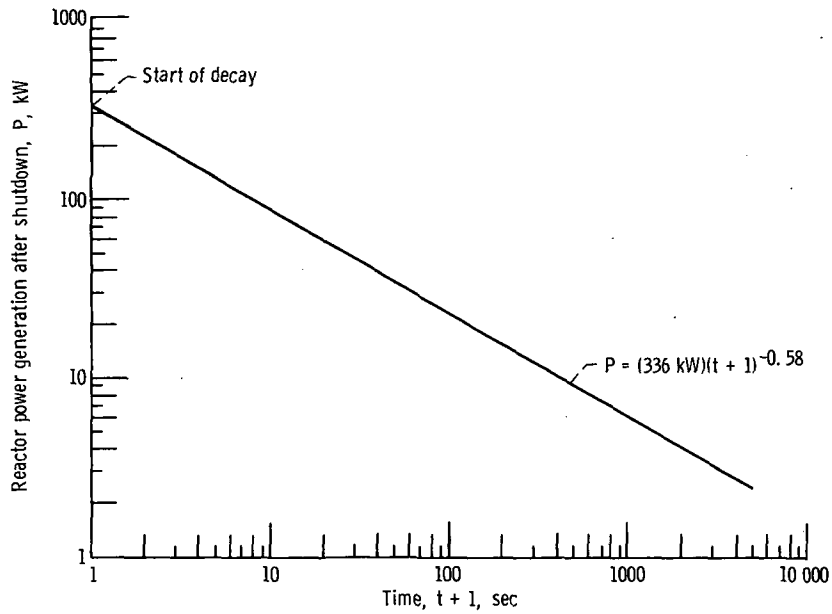

Figure 15. - Assumed power decay curve for reactor after shutdown.

APPENDIX B

SIMULATION CONSTANTS

Reactor Constants

Temperature coefficients of reactivity, dollars/K; dollars/^{o}F

Outlet grid plate	-0.00054; -0.0003
Average fuel	-0.0018; -0.001
Inlet grid plate	-0.00126; -0.0007

Heat capacities, MC, J/K; Btu/^{o}F

Fuel and cladding	9.54×10^{4}; 49.8
Inlet grid plate	1.04×10^{4}; 5.5
Outlet grid plate	8.94×10^{4}; 4.7

Heat conductances, hA, J/(sec)(K); Btu/(sec)(^{o}F)

Fuel to NaK coolant	6.3×10^{3}; 3.32
Flat surface of inlet grid plate	5.88×10^{2}; 0.31
Cylindrical surface of inlet grid plate holes	2.20×10^{3}; 1.16
Flat surface of outlet grid plate	3.79×10^{2}; 0.20
Cylindrical surface of outlet grid plate holes	1.92×10^{3}; 1.01

Mean effective neutron life, l^*, sec . . . . . 5.7×10^{-6}

Fractions of delayed neutrons

β	0.00766
β_1/β	0.03297
β_2/β	0.2194
β_3/β	0.1960
β_4/β	0.3947
β_5/β	0.1150
β_6/β	0.04193

Decay constants, sec^{-1}

λ_1	0.0124
λ_2	0.0385
λ_3	0.1111
λ_4	0.301

λ_5 . . . . . 1.13
λ_6 . . . . . 3.00

NaK inventories, M_c, kg; lbm

Core 2.84; 6.20
Outlet plenum 7.48; 16.5
Outlet manifold 21.8; 48.0
Inlet plenum 8.75; 19.3
Inlet manifold 21.8; 48.0

NaK specific heat, C_c, J/(kg)(K); Btu/(lbm)(^{o}F) . . . . . 8.78×10^2; 0.21

Deadband temperature control limits, K; ^{o}F

T lower 913; 1185
T upper 933; 1220

Maximum temperature safety limits, K; ^{o}F

Reactor NaK outlet 950; 1250
Fuel 1033; 1400

Reactivity per control drum step, dollars 0.005

Minimum time between control drum steps in same direction (for deadband control only), sec 60

Heat Exchanger Constants

Heat transfer coefficients at design flow, h, J/(sec)(m^2)(K); Btu/(hr)(ft^2)(^{o}F)

Gas side 130; 23
NaK side . . . . . 1.11×10^4; 1960

Heat transfer areas, A_{HT}, m^2; ft^2

Gas side 40.3; 434
NaK side 4.5; 48

NaK inventory, M_c, kg; lbm 6.8; 15

Mass of metal, kg; lbm 66.2; 146

Specific heats, C, J/(kg)(K); Btu/(lbm)(^{o}F)

Metal	3.85×10^{2}; 0.092
Gas	5.19×10^{2}; 0.124
Coolant (NaK)	8.78×10^{2}; 0.21

Other Constants

Reactor loop pipe (NaK) inventories, kg; lbm

Reactor outlet manifold to standby heat exchanger	4.5; 10
Between heat exchangers	3.2; 7
Heat exchanger to reactor inlet manifold	22.7; 50

Gas pipe constants

Heat exchanger to turbine:

Mass of metal, kg; (lbm)	46.3; 102
Gas to metal heat conductance, J/(sec)(K); Btu/(sec)(^{o}F)	6.83×10^{2}; 0.36
Metal specific heat, J/(kg)(K); Btu/(ft^{2})(sec)(^{o}F)	4.20×10^{2}; 0.10
Heat transfer coefficient, J/(m^{2})(sec)(K); Btu/(ft^{2})(sec)(^{o}F)	3.06×10^{2}; 0.015

Recuperator to heat exchanger:

Mass of metal, kg; lbm	64.4; 142
Gas to metal heat conductance, J/(sec)(K); Btu/(sec)(^{o}F)	9.55×10^{2}; 0.504

Recuperator temperature time constant, sec 10

APPENDIX C

SYMBOLS

A	heat transfer area, m^2; ft^2
A_{cs}	cross-sectional flow area, m^2; ft^2
C	specific heat, J/(kg)(K); Btu/(lbm)(^oF)
C_i	concentration of delay neutron precursors of ith group, precursors/m^3
D_i	contribution to power from i^{th} group of delayed neutron precursors, kW
h	heat transfer coefficient, J/(sec)(m^2)(K); Btu/(sec)(ft^2)(^oF)
l^*	mean effective neutron lifetime, sec
M	mass, kg; lbm
N	neutron density, neutrons/m^3
NL	number of lumps
P	total reactor power, kW
$P_{initial}$	reactor power just prior to initiation of shutdown, kW
P_N	power calculated from kinetics equations equal to total reactor power except during scram, kW
P_R	power radiated to cold wall, kW
Px(K)	portion of total power allocated to K^{th} lump, dimensionless
p	perimeter of cross-sectional flow area, m; ft
T	temperature, K; ^oF
t	time, sec
V	volume, m^3; ft^3
v	velocity, m/sec; ft/sec
w	flow rate, kg/sec; lbm/sec
x	distance, m; ft
β	fraction of total neutrons that are delayed
β_i	fraction of total neutrons that are delayed neutrons in i^{th} delay group

Δ	change from reference value (eq. (3)) or change from previous value (eqs. (8) to (10))
$\delta k/\beta$	excess reactivity, dollars
λ_i	decay constant of delayed neutron precursor of ith group, sec^{-1}
θ_{cd}	position of control drum, rad
τ	time constant associated with prompt neutrons, sec
τ_c	fluid dwell time in one lump of core, sec

Subscripts:

c	coolant
cf	core to fluid
dp	design point
f	fuel
gp	grid plate
i	i^{th} delay group
in	inlet fluid
k	k^{th} node
lg	lower grid plate (inlet)
man	manifold
out	outlet fluid
pl	plenum
ug	upper grid plate (outlet)

REFERENCES

1. Jefferies, Kent S.: Experimental Investigation of Reactor-Loop Transients During SNAP-8 Power Conversion System Startup. NASA TM X-52735, 1969.
2. Glasstone, Samuel: Priniciples of Nuclear Reactor Engineering. D. Van Nostrand Co., Inc., 1955.
3. Jefferies, Kent S.; Packe, Donald R.; and Dittrich, Ralph T.: Design and Performance of a Nuclear Reactor Simulator for Nonnuclear Testing of Space Power Systems. NASA TN D-4095, 1967.

NATIONAL AERONAUTICS AND SPACE ADMINISTRATION
WASHINGTON, D.C. 20546

OFFICIAL BUSINESS
PENALTY FOR PRIVATE USE $300

SPECIAL FOURTH-CLASS RATE
BOOK

POSTAGE AND FEES PAID
NATIONAL AERONAUTICS AND
SPACE ADMINISTRATION
451

U.S.MAIL

POSTMASTER: If Undeliverable (Section 158 Postal Manual) Do Not Return

"The aeronautical and space activities of the United States shall be conducted so as to contribute . . . to the expansion of human knowledge of phenomena in the atmosphere and space. The Administration shall provide for the widest practicable and appropriate dissemination of information concerning its activities and the results thereof."

—NATIONAL AERONAUTICS AND SPACE ACT OF 1958

NASA SCIENTIFIC AND TECHNICAL PUBLICATIONS

TECHNICAL REPORTS: Scientific and technical information considered important, complete, and a lasting contribution to existing knowledge.

TECHNICAL NOTES: Information less broad in scope but nevertheless of importance as a contribution to existing knowledge.

TECHNICAL MEMORANDUMS: Information receiving limited distribution because of preliminary data, security classification, or other reasons. Also includes conference proceedings with either limited or unlimited distribution.

CONTRACTOR REPORTS: Scientific and technical information generated under a NASA contract or grant and considered an important contribution to existing knowledge.

TECHNICAL TRANSLATIONS: Information published in a foreign language considered to merit NASA distribution in English.

SPECIAL PUBLICATIONS: Information derived from or of value to NASA activities. Publications include final reports of major projects, monographs, data compilations, handbooks, sourcebooks, and special bibliographies.

TECHNOLOGY UTILIZATION PUBLICATIONS: Information on technology used by NASA that may be of particular interest in commercial and other non-aerospace applications. Publications include Tech Briefs, Technology Utilization Reports and Technology Surveys.

Details on the availability of these publications may be obtained from:

SCIENTIFIC AND TECHNICAL INFORMATION OFFICE

NATIONAL AERONAUTICS AND SPACE ADMINISTRATION

Washington, D.C. 20546