General Disclaimer

One or more of the Following Statements may affect this Document

- This document has been reproduced from the best copy furnished by the organizational source. It is being released in the interest of making available as much information as possible.

- This document may contain data, which exceeds the sheet parameters. It was furnished in this condition by the organizational source and is the best copy available.

- This document may contain tone-on-tone or color graphs, charts and/or pictures, which have been reproduced in black and white.

- This document is paginated as submitted by the original source.

- Portions of this document are not fully legible due to the historical nature of some of the material. However, it is the best reproduction available from the original submission.

Produced by the NASA Center for Aerospace Information (CASI)

NASA TECHNICAL MEMORANDUM

April 1974

NASA TM X-64812

MSFC SKYLAB MULTIPLE DOCKING ADAPTER
Vol. II

Skylab Program Office

NASA

JUN 1974
RECEIVED
NASA STI FACILITY
INPUT BRANCH

George C. Marshall Space Flight Center
Marshall Space Flight Center, Alabama

(NASA-TM-X-64812) MSFC SKYLAB MULTIPLE DOCKING ADAPTER, VOLUME 2 Final Report (NASA) 326 p HC $19.50 CSCL 22B

N74-26329

Unclas
G3/31 40532

MSFC - Form 3190 (Rev June 1971)

TECHNICAL REPORT STANDARD TITLE PAGE

1. REPORT NO. NASA TM X-64812	2. GOVERNMENT ACCESSION NO.	3. RECIPIENT'S CATALOG NO.
4. TITLE AND SUBTITLE MSFC Skylab Multiple Docking Adapter Vol II		5. REPORT DATE April 1974
		6. PERFORMING ORGANIZATION CODE
7. AUTHOR(S)		8. PERFORMING ORGANIZATION REPORT #
9. PERFORMING ORGANIZATION NAME AND ADDRESS George C. Marshall Space Flight Center Marshall Space Flight Center, AL 35812		10. WORK UNIT NO.
		11. CONTRACT OR GRANT NO.
12. SPONSORING AGENCY NAME AND ADDRESS National Aeronautics and Space Administration Washington, D. C. 20546		13. TYPE OF REPORT & PERIOD COVERED Technical Memorandum Final
		14. SPONSORING AGENCY CODE

15. SUPPLEMENTARY NOTES

Airlock/Multiple Docking Adapter Project Office

16. ABSTRACT

This report presents the history of the development of the Skylab Multiple Docking Adapter (MDA), NASA Contract No. NAS8-24000, from initial concept through its final design, related test programs, mission performance, and lessons learned.

The MDA performed with no significant problems throughout the three manned Skylab missions.

NOTE: Vol I presents section 1 and 2
Vol II presents sections 3 through 13

17. KEY WORDS	18. DISTRIBUTION STATEMENT Unclassified - Unlimited

J. McCool
Project Manager, Airlock/MDA

19. SECURITY CLASSIF. (of this report)	20. SECURITY CLASSIF. (of this page)	21. NO. OF PAGES	22. PRICE
Unclassified	Unclassified	326	NTIS

MSFC - Form 3292 (Rev December 1972)

For sale by National Technical Information Service, Springfield, Virginia 22151

TABLE OF CONTENTS

Volume I

	Page
TABLE OF CONTENTS	ii
LIST OF ILLUSTRATIONS	vi
LIST OF TABLES	xi
LIST OF ACRONYMS	xii
1. INTRODUCTION	1-1
1.1 Purpose	1-1
1.2 Scope	1-1
1.3 Summary	1-1
2. DISCUSSION	2-1
2.1 Module Description	2-1
2.1.1 History/Design Evolution	2-1
2.1.2 Test Evaluation	2-10
2.1.3 MDA Systems Description/Functions	2-17
2.2 MDA Systems	2-23
2.2.1 Structures	2-23
2.2.1.1 Structures System	2-23
2.2.1.2 MDA Shell	2-30
2.2.1.3 External Components	2-34
2.2.1.4 Internal Components	2-41
2.2.1.5 Materials	2-75
2.2.1.6 Mockups & Trainers	2-101
2.2.1.7 Mass Properties	2-108
2.2.2 Environmental Control System	2-115
2.2.2.1 MDA Ventilation System	2-115
2.2.2.2 ATM C&D Panel/EREP Coolant System	2-121
2.2.2.3 MDA Vent System	2-141
2.2.2.4 M512/M479 Experiment Vent Systems	2-146
2.2.2.5 MDA Pressure Equalization System	2-155
2.2.3 Thermal Control System	2-163
2.2.3.1 Passive System	2-163
2.2.3.2 Active System	2-190
2.2.4 Electrical System	2-215
2.2.4.1 Utility Outlets	2-216
2.2.4.2 Power Distribution Assembly	2-219
2.2.4.3 Cable Assemblies	2-222
2.2.4.4 Interior Lighting	2-231
2.2.4.5 Exterior Lighting	2-237

PRECEDING PAGE BLANK NOT FILMED

2.2.4.6 Rate Gyro Six-Pack Cabling 2-238
2.2.4.7 Rate Gyro Six-Pack Meter Checkout Cables 2-239
2.2.4.8 TV Mini-Monitor Power/Signal Cable 2-240
2.2.4.9 Adapter Power Cable/Modified Lunar Drill (Electric Nibbler) 2-240
2.2.4.10 MDA Engineering Mockup Unit (EMU) Article . . . 2-241
2.2.4.11 MDA One-G Training Article. 2-243

2.2.5 Instrumentation System 2-247
2.2.5.1 Signal Conditioner 2-247
2.2.5.2 Temperature Transducer 2-253
2.2.5.3 Pressure Transducer. 2-260

2.2.6 Communications System. 2-265

2.2.7 Caution and Warning (C&W) System 2-279

2.2.8 Television (TV) System 2-287
2.2.8.1 Video Switch 2-287
2.2.8.2 TVIS 2-291
2.2.8.3 Video Tape Recorder. 2-301

2.2.9 Crew Systems 2-307
2.2.9.1 Crew Stations. 2-307
2.2.9.2 Stowage 2-328
2.2.9.3 Habitability (Comfort Evaluation). 2-335

2.2.10 Experiments/ATM C&D to MDA Interfaces 2-347
2.2.10.1 Earth Resources Experiment Package. 2-347
2.2.10.2 Materials Processing in Space Facility (MPF). . 2-372
2.2.10.3 S009 Nuclear Emulsion 2-379
2.2.10.4 Proton Spectrometer 2-384
2.2.10.5 Solar Radio Noise Burst Monitor (RNBM). 2-390
2.2.10.6 ATM Control & Display Subsystem 2-393

2.2.11 Ground Support Equipment (GSE). 2-403
2.2.11.1 Structural. 2-403
2.2.11.2 Mechanical. 2-423
2.2.11.3 Electrical. 2-437

VOLUME II

3. RELIABILITY PROGRAM 3-1
3.1 Objectives & Methodology 3-1
3.2 Design Evaluation. 3-4
3.2.1 FMEA 3-4
3.2.2 Critical Item List 3-4
3.2.3 Trade & Special Studies. 3-4
3.2.4 Design Review. 3-7

3.3 Alert Investigations 3-7
3.4 Conclusions & Recommendations. 3-11

4. QUALITY ASSURANCE PROGRAM 4-1
4.1 Design Review 4-1
4.2 Implementation of Critical and Limited Life Component Drawing. 4-2
4.3 Supplier Evaluation. 4-4
4.4 Material Evaluations 4-4
4.5 Procurement Control. 4-8
4.6 Test Procedure Approval/First Usage Validation . . . 4-10
4.7 Nonconformance/FA Evaluation 4-10
4.8 Configuration Verification and Change Activity . . . 4-25
4.9 Qualification Testing. 4-29
4.10 Manufacturing In-Line Surveillance. 4-30
4.11 Subsystem/System/Integration Test 4-59
4.12 Hardware Review 4-70
4.13 Acceptance Manager. 4-76
4.14 Mission Support 4-79

5. LOGISTICS 5-1
5.1 Logistics Planning 5-1
5.2 Maintenance Analysis 5-1
5.3 Spares Provisioning/Management 5-2
5.4 Operation, Maintenance and Handling Procedures . . . 5-4
5.5 Transportation Planning. 5-5
5.6 Development of Critical & Limited Life Component Drawing. 5-5
5.7 Modification Instructions. 5-5
5.8 Training of Contractor Personnel 5-5
5.9 In-Flight Maintenance. 5-7
5.10 Conclusions & Recommendations 5-11

6. SAFETY PROGRAM. 6-1
6.1 General. 6-1
6.2 Crew/System Safety 6-2
6.3 Conclusions. 6-4
6.4 Recommendations. 6-5

7. TESTING PROGRAM 7-1
7.1 Test Requirements. 7-1
7.2 Component Testing. 7-12
7.3 Off-Module Testing 7-19
7.4 Structural Testing 7-25
7.5 Module Testing - Denver. 7-27
7.6 Spacecraft Systems Testing - St. Louis 7-40

7.7 Integrated Vehicle Testing - KSC 7-62
7.8 Mission Support Testing 7-90
7.9 STU/STDN Activity 7-96

8. MANUFACTURING 8-1
8.1 Articles Manufactured. 8-1
8.2 MSFC Build History 8-5
8.3 Manufacturing Techniques 8-11

9. MDA PROGRAM CONTROLS 9-1
9.1 Planning & Scheduling. 9-1
9.2 Configuration Control. 9-4

10. MISSION OPERATIONS SUPPORT 10-1
10.1 General MMC Support Philosophy. 10-1
10.2 NASA/MSFC Support 10-2
10.3 MDA Contractor Operation. 10-5
10.4 Backup Article and STU/STDN 10-13
10.5 Vendor On-Call Support. 10-17
10.6 Conclusions & Recommendations 10-18

11. NEW TECHNOLOGY 11-1
11.1 Aerospace Applications. 11-1
11.2 Other Applications. 11-3

12. CONCLUSIONS AND RECOMMENDATIONS. 12-1
12.1 Mission Performance 12-1
12.2 Testing 12-10
12.3 Support 12-12

13. REFERENCES. 13-1

LIST OF ILLUSTRATIONS

Volume I

Figure	Title	Page
2.1.1-1	MDA Program Historical Events	2-2
2.1.1-2	Early MDA Concept	2-6
2.2.1-1	MDA Exterior View	2-27
2.2.1-2	MDA Shell	2-31
2.2.1-3	L-Band Truss Structure	2-35
2.2.1-4	MDA Interior Arrangement	2-42
2.2.1-5	Axial Hatch	2-44
2.2.1-6	S190 Window and Mechanisms	2-50
2.2.1-7	Film Vault No. 1	2-67
2.2.1-8	Film Vault No. 2	2-67
2.2.1-9	Film Vault No. 3	2-68
2.2.1-10	Film Vault No. 4	2-68
2.2.1-11	Pressure Effects on Mosites Foam	2-87
2.2.1-12	Zero-G Trainer	2-102
2.2.1-13	Neutral Buoyancy Article	2-104
2.2.1-14	MDA Weight Growth Relative to Initial Requirements	2-110
2.2.1-15	Weight Growth History	2-111
2.2.2-1	MDA Ventilation System	2-117
2.2.2-2	MDA ATM-EREP Coolant Systems	2-123
2.2.2-3	ATM C&D Console Coolant Installation	2-123
2.2.2-4	ATM C&D/EREP Coolant Flow Dropout	2-139
2.2.2-5	MDA Vent Valve Panel	2-142
2.2.2-6	4 Inch Chamber Vent Valve	2-148
2.2.2-7	M512/M479 Vent System	2-148
2.2.2-8	Axial Hatch Equalization System	2-156
2.2.3-1	MDA Comfort Box	2-170
2.2.3-2	Passive Thermal Control System	2-176
2.2.3-3	Insulation with Fiberglass Rings and Rails	2-177
2.2.3-4	Low Emissivity Tape on L-Band Truss	2-178
2.2.3-5	Thermal Paints on MDA Cone	2-179
2.2.3-6	Insulation Purge System, Typical Installation	2-180
2.2.3-7	Active Thermal Control System Schematic	2-195
2.2.3-8	Wall Heating System, General Arrangement	2-196

2.2.3-9 Wall Heater and Thermostat, Typical Installation. . 2-197
2.2.3-10 MDA Program Historical Events 2-198
2.2.3-11 S190 Window Heating System 2-199
2.2.4-1 High Power Accessory Outlets. 2-218
2.2.4-2 Power Distributor Assembly 2-221
2.2.4-3 MDA Interior Cabling 2-223
2.2.4-4 MDA Exterior Cabling 2-224
2.2.4-5 MDA Electrical Connectors 2-226
2.2.4-6 Termination of Zero-G Connector 2-227
2.2.4-7 Tubing Junctions. 2-228
2.2.4-8 Cable Junctions 2-228
2.2.4-9 Cable Flammability Protection 2-229
2.2.4-10 Cable to Connector Flammability Protection. 2-229
2.2.4-11 MDA Interior Lighting System 2-232
2.2.4-12 MDA Interior Light Switch Assembly. 2-233
2.2.4-13 MDA Running Lights. 2-238
2.2.5-1 MDA Temperature Measurement System Block Diagram. . 2-248
2.2.5-2 Bridge Completion Network Schematic 2-249
2.2.5-3 Temperature Transducer. 2-254
2.2.6-1 Speaker Intercom Assembly 2-266
2.2.6-2 MDA SIA Network 2-268
2.2.6-3 SIA Signal Flow 2-269
2.2.6-4 CSM/MDA Audio System. 2-270
2.2.6-5 Personal Communications Assembly. 2-272
2.2.6-6 Crewman Communications Umbilical. 2-273
2.2.6-8 Lightweight Crewman Communications Umbilical. . . . 2-275
2.2.6-8 Crewman Communication Control Head Assembly 2-276
2.2.7-1 Fire Detection Subsystem. 2-281
2.2.7-2 Fire Detection Functional 2-282
2.2.7-3 UV Fire Sensor. 2-283
2.2.7-4 Fire Sensor Control Panel 2-283

2.2.7-5	Fire Sensor Test.	2-284
2.2.8-1	Skylab TV System.	2-287
2.2.8-2	Video Switch.	2-288
2.2.8-3	TV Input Station.	2-293
2.2.8-4	Video Tape Recorder	2-302
2.2.9-1	Crewman at ATM Crew Station (left view)	2-309
2.2.9-2	Crewman at ATM Crew Station (right view).	2-309
2.2.9-3	Crewman at EREP C&D Crew Station.	2-311
2.2.9-4	Skylab Crewman at EREP VTS C&D Crew Station	2-313
2.2.9-5	Crewman at VTS Crew Station	2-313
2.2.9-6	M512/479 Experiment Crew Station.	2-314
2.2.9-7	Total MDA Workspace	2-315
2.2.9-8	Equipment Nested in Mosites Foam.	2-329
2.2.9-9	Equipment Stowed Between Partitions Padded with Mosites Foam	2-330
2.2.9-10	Equipment Mechanically Clamped and Secured with Calfax Fasteners.	2-331
2.2.9-11	Equipment with Clevis/Lug Interfaces with Expandogrip Pin	2-333
2.2.9-12	Equipment with Clevis/Lug Interfaces.	2-334
2.2.10-1	EREP Installation	2-347
2.2.10-2	EREP Data Frequency Spectrum.	2-349
2.2.10-3	EREP Hardware Interfaces.	2-356
2.2.10-4	S190 Window Transmittance Requirements.	2-358
2.2.10-5	S190 Window Reflectance Requirements.	2-358
2.2.10-6	IR Spectrometer Spectral Resolution	2-361
2.2.10-7	M512 Materials Processing in Space Facility	2-373
2.2.10-8	M512 Equipment Stowage Container.	2-373
2.2.10-9	M518 Multipurpose Electric Furnace.	2-375
2.2.10-10	S009 Nuclear Emulsion	2-381
2.2.10-11	Proton Spectrometer Installation.	2-384
2.2.10-12	Proton Spectrometer Detector Head Assembly.	2-386
2.2.10-13	Solar Radio Noise Burst Monitor Installation. . . .	2-390

2.2.10-14 ATM C&D Console 2-395
2.2.10-15 BI/LCA Installation 2-400
2.2.11-1 MDA Trunnioned Onto Rotation Fixture. 2-405
2.2.11-2 MDA Trunnioned to Horizontal Attitude after Mating to AM 2-406
2.2.11-3 MDA Trunnioned to Vertical Attitude for Stacking to FAS. 2-407
2.2.11-4 MDA in Transportation Fixture Offloaded from Guppy. 2-409
2.2.11-5 MDA on Weight and C.G. Table. 2-411
2.2.11-6 Equipment for Protection and Access at the Radial Docking Port. 2-413
2.2.11-7 Horizontal Access Platform. 2-415
2.2.11-8 Hoist and Track Installation. 2-416
2.2.11-9 Platform and Ladder Assembly. 2-417
2.2.11-10 MDA Trainer Erected to Vertical Position. 2-420
2.2.11-11 MDA Trainer on Support Stand. 2-421
2.2.11-12 Desiccant Breather Assembly (SK820FL5300) 2-425
2.2.11-13 Shipping Cover Assembly (SK820FL5500) 2-426
2.2.11-14 Test Lighting Fixture 2-437
2.2.11-15 MDA Checkout Fixture 2-440
2.2.11-16 EREP Checkout Fixture 2-441
2.2.11-17 Proton Spectrometer GSE Mating Fixture. 2-442
2.2.11-18 Television GSE 2-442
2.2.11-19 S190 Window Assembly Preflight Tester 2-445
2.2.11-20 TV GSE Input Rack 2-447
2.2.11-21 TV GSE Output Rack. 2-447
2.2.11-22 MDA Connector Dust Cover Kit. 2-450
2.2.11-23 BI/LCA Functional Test Set. 2-451
2.2.11-24 T027 TV Test Adapter. 2-452

VOLUME II

4.7.1.2-1 MDA MARS vs Schedule Summary. 4-13
4.7.1.2-2 MDA DR vs Schedule Summary. 4-13
4.7.1.2-3 MDA DC&R, FA, and CAPS Summary. 4-18
4.11.1-1 Skylab Standardization/Certification Board. 4-60

7.1-1	MDA Test Requirements Definition Tree	7-4
7.1-2	MDA Test Requirements Implementation Tree	7-6
7.2-1	Test Requirements Matrix	7-14
7.2-2	Qualification Test Program Sequence	7-16
7.2-3	Component/Subassembly Qualification	7-16
7.2-4	Test Documentation/Test Program Sequence	7-18
7.5-1	MDA Flight Article Denver Test Flow	7-29
7.5-2	MDA Flight Article Denver Schedule	7-30
7.5-3	MDA Backup Article Denver Schedule	7-39
7.6-1	Flight Article-AM/MDA Integrated Test Activities at St. Louis	7-43
7.6-2	Backup Article-AM/MDA Integrated Test Activities at St. Louis	7-54
7.7-1	KSC-AM/MDA Test Flow (O&C)	7-63
7.7-2	KSC-AM/MDA Test Flow (VAB)	7-64
7.7-3	AM/MDA KSC Test Schedule	7-66
7.8-1	Skylab TV System-STU/STDN	7-95
8.1-1	MDA EMU	8-2
8.1-2	MDA One-G Trainer	8-2
8.1-3	MDA DMU	8-3
8.2-1	MDA Pressure Vessel Structure Assembly	8-5
8.3-1	Sample Manufacturing Flow	8-13
8.3-2	MDA Installed in Factory	8-15
8.3-3	MDA Installed in SSB	8-16
10.1-1	Internal MMC Skylab Mission Support Interfaces	10-1
10.2-1	Skylab Flight Operations Management Support Plan Interfaces	10-3
10.2-2	MSFC Skylab Operations Organization	10-4
10.3-1	MDA Mission Support Organization	10-6
10.3-2	Denver Support Room Organization	10-10
10.3-3	MMC/MDA Document Review Organization	10-14
10.4-1	MDA Backup Article Mission Support Flow	10-16

LIST OF TABLES

Table	Title	Page
2.2.1-1	MDA Film Vaults	2-65
2.2.1-2	Stowage Containers	2-72
2.2.1-3	Resistance of Metals to Stress Corrosion Cracking	2-76
2.2.1-4	EREP Weights	2-113
2.2.2-1	Coolant Loop Dropout History	2-137
2.2.3-1	MDA CEI Requirements Summary - TCS	2-164
2.2.3-2	MDA Requirements Summary, AM/MDA and MDA/CSM ICDs	2-167
2.2.3-3	MDA Requirement Summary - Experiments	2-169
2.2.3-4	Passive MDA TCS Analyses	2-171
2.2.3-5	Active MDA TCS Analyses	2-191
2.2.5-1	Temperature Transducer Qualification Test Results and Disposition	2-256
2.2.5-2	Transducer Location/Disposition	2-257
2.2.5-3	Failure Analysis Summary - Absolute Pressure Transducer	2-262
2.2.8-1	TVIS Build Drawings	2-292
2.2.8-2	TVIS EMI Deviation Report	2-296
2.2.10-1	EREP Power Allocations	2-353
2.2.10-2	EREP System End Items	2-355
2.2.10-3	S190 Sensor Specifications	2-357
3.2.2-1	Critical Items List Summary (MDA)	3-5
3.2.4-1	MDA Reliability Program Milestones	3-8
7.3-1	EREP Bench Test Anomaly Summary (St. Louis)	7-22
10.5-1	Vendor Support	10-17

LIST OF ACRONYMS

AAP:	Apollo Applications Program
ADP:	Acceptance Data Package
AETL:	Approved Engineering Test Laboratories
AID:	Air Interchange Duct
ALC:	Audio Load Compensator
AM:	Airlock Module
APCS:	Attitude Pointing and Control System
AR:	Action Request; Anomaly Report
AS&E:	American Science and Engineering
ATM:	Apollo Telescope Mount
AWS:	Automated Wiring System
BCA:	Boresighted Camera Array
BI/LCA:	Backup Inverter Lighting Control Assembly
B/U:	Backup
CACC:	Corrective Action Control Center
CAPS:	Corrective Action Problem Summary
CBRM:	Charger Battery Regulator Module
CCB:	Configuration Control Board
CCBD:	Configuration Control Board Directive
CCCHA:	Crewman Communication Control Head Assembly
C^2F^2:	Crew Compartment Fit and Function
CCOH:	Corrosive Contaminants, Oxygen and Humidity
CCSR:	Crew Compartment Stowage Review
CCU:	Crewman Communication Umbilical
CD:	Countdown
CDDT:	Countdown Demonstration Test
CDR:	Commander; Critical Design Review

List of Acronyms (Continued)

CEI: Contract End Item

CFE: Contractor Furnished Equipment

CIL: Critical Item List

CLLCD: Critical and Limited Life Component Drawing

CN: Change Notice

COFW: Certificate of Flight Worthiness

CORT: Certificate of Readiness to Test

CRS: Cluster Requirements Specification

CS&A: Configuration Status & Accounting

CSCU: Coolant System Checkout Unit

CSM: Command and Service Module

CSR: Crew Station Review

CTU: Command Transfer Unit

CWA: Conference Work Area

CWG: Constant Wear Garment

C&D: Control and Display

C&DM: Configuration and Data Management

C&W: Caution and Warning

DA: Deployment Assembly

DAC: Data Acquisition Camera

DAR: Deviation Approval Request

DAS: Digital Address System

DAT: Design Assurance Testing

DCN: Design Change Notice

DC&R: Discrepancy Check & Report

DCS: Digital Command System

DEA: Digital Electronics Assembly

DMU: Development Mockup

DQLS: Data Quick Look Station

List of Acronyms (Continued)

DR: Discrepancy Report
DRL: Data Requirements List
DSR: Denver Support Room
DRSS: Discrepancy Reporting System Squawks
DTA: Dynamic Test Article

ECF: Electrical Conductive Film
ECP: Engineering Change Proposal
ECR: Engineering Change Request
ECS: Environmental Control System
EDCS: Engineering Design Change Schedule
EDDU: EREP Diagnostic Downlink Unit
EDP: Engineering Data Package
EIS: End Item Specification
EL: Electroluminescent Lighting
EMC: Electro Magnetic Compatibility
EMI: Electro Magnetic Interference
EMU: Engineering Mockup
EREP: Earth Resources Experiment Package
ESE: Experiment Support Equipment
ESS: Experiment Support System
ETH: Engineering Test Hardware
ETO: Engineering Test Order
ETS: Electrical Test Set
EU: Electronics Unit
EVA: Extra Vehicular Activity
EWO: Engineering Work Order

FA: Failure Analysis
FAIR: Failure Analysis Investigation Report

List of Acronyms (Continued)

FAS: Fixed Airlock Shroud
FCE: Flight Crew Equipment
FIV: Functional Interface Verification
FMC: Forward Motion Compensation
FMEA: Failure Mode Effects Analysis
FOMR: Flight Operations Management Room
FPM: Feet Per Minute
FRR: Flight Readiness Review
FSA: Fire Sensor Assembly
FSCP: Fire Sensor Control Panel
FTTH: Flight Type Training Hardware

GFE: Government Furnished Equipment
GFP: Government Furnished Property
GSE: Ground Support Equipment
GSFC: Goddard Space Flight Center

Hα: Hydrogen Alpha
HAO: High Altitude Observatory
HCO: Harvard College Observatory
HOSC: Huntsville Operations Support Center

ICD: Interface Control Drawing
ICWG: Interface Control Working Group
IDR: Interim Discrepancy Report
IFM: In Flight Maintenance
IFOV: Instantaneous Field of View
IFTU: Interface Functional Test Unit
I/LCA: Inverter Lighting Control Assembly
INC: Installation Notice Card

List of Acronyms (Continued)

IR:	Infra Red
IRN:	Interface Revision Notice
ISR:	Incremental Summary Review
ISS:	Input Signal Simulator
IVA:	Intra Vehicular Activity
I&C:	Instrumentation and Communication
JSC:	Johnson Space Center
KSC:	Kennedy Space Center
LC:	Launch Complex
L/C:	Liaison Call
LCCU:	Lightweight Crew Communications Umbilical
LM:	Lunar Module
LM&SS:	Lunar Mapping and Survey System
LOE:	Log of Exceptions
LOF:	Lack of Fusion
LOLI:	Limited Operating Life Item
LTF:	Leak Test Facility
LWHS:	Light Weight Head Set
MAR:	Mission Action Request
MARS:	Martin Automatic Reporting System
MCC:	Mission Control Center
MDA:	Multiple Docking Adapter
MDAC-(E)(W):	McDonnel Douglas Astronautics Corporation (East)(West)
MEF:	Multipurpose Electric Furnace
MER:	Mission Evaluation Room
MEWG:	Mission Evaluation Working Group
MI:	Modification Instructions

List of Acronyms (Continued)

MMC: Martin Marietta Corporation
MOPS: Mission Operation Planning System
MPC: Manual Pointing Controller
MPF: Material Processing Facility
MPP: Manufacturing Process Plans
MPS: Mission Preparation Sheets
MRB: Material Review Board
MRD: Maintenance Requirements Document
MRR: Material Review Reports
MSA: Mount Support Assembly
MSFC: Marshall Space Flight Center
MSG: Mission Support Group
MSGL: Mission Support Group Leader
MSPF: Multispectral Photographic Facility
MUTH: Mockup Training Hardware
MUX: Multiplexer

NA: Not Applicable
NASA: National Aeronautics and Space Administration
N/B: Neutral Buoyancy
NBF: Neutral Buoyancy Facility
NBG: Non Burning Gunk
NR: Nonconformance Report
NRL: Naval Research Laboratory

OA: Orbital Assembly
OCP: Operational Checkout Procedure
OD: Operating Director
OM&H: Operation, Maintenance and Handling Procedure
OSM: Operations Support Manager

List of Acronyms (Continued)

OV: Orbiting Vehicle
OWS: Orbital Workshop
O&C: Operations and Checkout

PAM: Pulse Amplitude Modulation
PCM: Pulse Code Modulation
PCN: Procedure Change Notice
PCR: Procedure Change Request
PDA: Power Distribution Assembly
PIE: Product Integrity Engineer
PIRN: Preliminary Interface Revision Notice
PIRR: Parts Installation/Removal Record
PIT: Pre Installation Test
PLT: Pilot
PRT: Partial Retest
PS: Payload Shroud
PTFE: Polytetrafluoroethylene
PTR: Problem Tracking Request
PWM: Pulse Width Modulator
P&S: Pack & Ship

QC: Quality Control
QE: Quality Engineering
QTSS: Qualification Test Summary Sheet

RCP: Rotation Control Panel
RECP: Record Engineering Change Proposal
RID: Review Item Discrepancy
RM: Resupply Module
RMO: Resident Management Office

List of Acronyms (Continued)

RNBM: Radio Noise Burst Monitor
RTV: Room Temperature Vulcanizing

SAL: Scientific Airlock
SAS: Solar Array System
SAT: Systems Assurance Test
SCN: Specification Change Notice
SEDR: Service Engineering Department Report
SE&I: Systems Engineering and Integration
SFIV: System Functional Interface Verification
SFP: Single Failure Point
SFU: Solar Flux Unit
SIA: Speaker Intercom Assembly
SL: Skylab
SLCN: Stowage List Change Notice
SOW: Statement of Work
SPS: Service Propulsion System
SPT: Science Pilot
SSB: Space Support Building
SSFIV: Super System Functional Interface Verification
STACR: System Test and Checkout Requirements
STDN: Spacecraft Tracking and Data Network
STS: Structural Transition Section
STU: Skylab Test Unit
SWS: Saturn Workshop
S&E: Science and Engineering

TACS: Thruster Attitude Control System
TCN: Test Change Notice
TCOP: Test and Checkout Plan

List of Acronyms (Continued)

TCP: Test and Checkout Procedure

TCRSD: Test and Checkout Requirements and Specification Document

TCS: Thermal Control System

TDR: Time Domain Reflectometer

TIP: Trainer Interface Panel

TIR: Temporary Installation Record

TLM: Telemetry

TPS: Test Preparation Sheet

T/R: Tape Recorder

TU: Transport Unit

TVIS: Television Input Station

UCR: Unsatisfactory Condition Report

USB: Unified "S" Band

UV: Ultra Violet

VAB: Vertical Assembly Building

VCO: Voltage Controlled Oscillator

VITS: Vertical Internal Test Signal

VLDU: Volumetric Leak Detection Unit

VPP: Volts Peak to Peak

VSWR: Voltage Standing Wave Ratio

VTF: Vertical Test Facility

VTR: Video Tape Recorder

VTS: Viewfinder Tracking System

WITS: West Integrated Test Stand

WLC: White Light Coronograph

X-REA: X-Ray Event Analyzer

XUV: Extreme Ultra Violet

3. RELIABILITY PROGRAM

3.1 OBJECTIVES AND METHODOLOGY

The objective of this program was to assure that the MDA would have a high inherent probability of mission success. This objective was met through a comprehensive reliability analysis of design as well as through establishment and surveillance of controls during the procurement, manufacture, test, and operation of the hardware.

The MDA Reliability Plan, ED-2002-1002, dated April 1970, and Change Notice 1, dated October 1970, established the specific tasks required to attain the reliability program objective. Systems Engineering Reliability had prime responsibility for implementing the plan and for reliability analysis of MDA flight hardware and mission essential ground support equipment (GSE). These analyses were performed to identify design and procedural deficiencies which could compromise the MDA mission and to assess the risk associated with the conditions identified. Where possible, cognizant design personnel performed the analysis with guidance from Reliability in accordance with the prescribed requirements and ground rules. In other instances, the actual analysis was performed by Reliability and reviewed by the responsible design organization. Analytical tasks were initiated and documented early in the program to afford opportunity for timely corrective action. There were several instances where procedures and hardware design were modified to eliminate existing Single Failure Points (SFP) brought to light by the analysis. The plan required publication of preliminary reports prior to CDR and a final report after CDR to reflect the impact of hardware changes at CDR. The analysis effort continued after that point with informal documentation maintained after April 1971. The details of the Failure Modes and Effects Analysis (FMEA) are contained in ED-2002-2004. A separate Critical Items List (CIL) ED-2002-2028, was baselined by the Skylab Level II Configuration Control Board (CCB) in August 1971 and was maintained throughout the program.

The approach used in the FMEA was to first develop block diagrams representing the composition and functional relationships of the system. The block diagrams identified functional units of the system including redundant elements and provided a method for tracing single failure points. Each entry on the block diagram was analyzed and documented in the general format described by the AAP Directive No. 13.

Items of hardware at the component level, whose failure would lead directly to loss of mission functions were identified as Single Failure Points (SFP). Criticality category codes used to designate the severity of the condition were as follows:

Criticality Category	Potential Effect of Failure
I	Loss of life or serious injury to crew (Ground or Flight)
IS	Safety and hazard monitoring systems whose loss would fail to identify conditions hazardous to the crew
2A	Immediate mission flight termination at the next planned Earth landing area. (For Skylab includes loss of primary mission objectives)
2B	Launch scrub
3	Launch delay (For Skylab includes loss of secondary mission objectives)
4	None of the above

SFPs in Category 1, 1S and 2A, required a criticality analysis in general accordance with NASA Drawing 10M30111, Procedure for Performing Systems Design Analysis, dated June 1964. This was a quantitative analysis depicting the number of equipment losses per million mission attempts attributed to a specific piece of hardware, presumed to fail in a specific mode during a particular period of operation. The criticality numbers provided a means for ranking SFPs and assigning priorities and resources for corrective action.

The more significant problems revealed through the FMEA were compiled into a CIL. The CIL consisted of Category 1, 1S and 2A SFPs, critical redundant backup components, launch critical components and ordnance system components. A retention rationale was developed for each item prior to submission of the list to the Level II CCB for approval. The retention rationale consisted of test programs, procedures, and controls to minimize the risk of component failure.

Reliability personnel reviewed failure reports and failure analyses for concurrence with the Quality Assurance disposition and corrective action decisions. In addition, the failure histories were reviewed to assure that all failures reported had been assessed for critical effects and documented in the FMEA.

The parts and materials program was reviewed periodically to assure adequacy of reliability considerations for procured as well as in-house build items.

Qualification test procedures and test results were reviewed to assure that tests were adequate to cover all failures identified by the FMEA and that all failures incurred were considered in the FMEA.

All design specifications and subsequent changes were reviewed by Reliability to assure compliance with environmental, performance, and reliability requirements.

Maintainability was a consideration in design and installation of MDA hardware to ensure capability for performing both prelaunch and inflight maintenance with a minimum impact on the mission.

Design criteria guidelines, tailored to specific hardware items and installations, were provided in end item and subordinate specifications. The criteria identified design features to facilitate accomplishment of maintenance and eliminate the potential for human induced failures.

Equipment and installation drawings were reviewed for items critical to mission success and items subject to prelaunch and inflight removal and replacement. Design of this equipment was evaluated to determine compliance with the maintainability criteria established by the applicable specifications. Design changes necessary to facilitate or improve maintainability of the equipment were coordinated with design and incorporated where feasible.

3.2 DESIGN EVALUATION

3.2.1 FMEA

The analysis was conducted at the component level and revealed several critical SFPs. The principle failure mode leading to crew hazard or premature termination of the mission, was loss of MDA pressurization. The four-inch vent valves were initially configured in parallel and were identified as Category 1 SFPs prior to CDR. Subsequently, the valves were placed in series and the operating procedure was changed with both valves opened prior to launch followed by closure of both valves at the completion of venting in orbit. These changes provided a redundant means for preventing exposure of the AM/MDA to vacuum in orbit. Other components that contributed to potential loss of pressurization in the MDA included docking port hatches, structural bolts and flanges, and windows. The ultraviolet detectors were found to have category 1S failure modes, e.g., loss of output results in risk of fire without warning. The initial FMEA was published in July 1970, Revision A was issued in October 1970 and Revision B was issued in April 1971. The analysis effort continued after April 1971 with evaluation of design changes and critical items. There were a total of 46 SFPs of all categories identified in the final FMEA: 1 Category 1, 1 Category 1S, 4 Category 2A, and 1 Category 2B. The remainder of the total were in Categories 3 and 4.

3.2.2 Critical Items List (CIL)

Each issue of the FMEA report contained a CIL. After the last FMEA revision a separate CIL document was published to facilitate maintenance of controls required on critical items. The MDA CIL, ED-2002-2028 was issued in August 1971 and changes were released through February 1973. The content of the CIL is summarized in Table 3.2.2-1. The controls required for the items identified by the CIL are documented in the MDA CLLCD, 82051000010.

3.2.3 Trade and Special Studies

Altitude Chamber Tests conducted at St. Louis required updating of the FMEA to reflect the test configuration of the flight article and later the backup article. The analysis considered the interrelation of the MDA, AM, test equipment, and ground support equipment. The intent was to identify any failure during the manned altitude run, which would be a hazard to crew

	COMPONENT	SINGLE FAILURE POINTS: CREW SAFETY (CATEGORY 1)	SINGLE FAILURE POINTS: MISSION CRITICAL (CATEGORY 2A)	SINGLE FAILURE POINTS: LAUNCH CRITICAL (CATEGORY 2B)	REDUNDANT/BACKUP COMPONENTS: CREW SAFETY	REDUNDANT/BACKUP COMPONENTS: MISSION CRITICAL
1.	S190 WINDOW	X		X		
2.	*S192 WINDOW	X		X		
3.	**UV DETECTOR CONTROL PANEL	X				
4.	UV DETECTOR	X				
5.	HATCH ASSY AXIAL AND RADIAL PORT		X	X		
6.	**EREP PANEL PWR DISPLAY SWITCH		X			
7.	**EREP PANEL PWR CIRCUIT BREAKER		X			
8.	FLEXIBLE COOLANT LINE		X			
9.	4-PORT SELECTOR VALVE		X			X
10.	**DOCKING DROGUE		X			
11.	**AM/MDA INTERFACE DISCONNECT		X			
12.	**CSM/MDA DOCKING SEAL		X			
13.	**PRESSURE EQUALIZATION VALVE ON AXIAL HATCH		X			
14.	**EREP CONTROL PANEL		X			
15.	CABLE HARNESS TO 4-INCH VENT VALVE			X		
16.	4-INCH VENT VALVE			X		X
17.	SAFETY SHIELD, B/U S190 WINDOW				X	
18.	EXTERNAL WINDOW COVER ASSY, B/U S190 WINDOW					X
19.	CAP, B/U PRESS EQUALIZATION VALVE				X	
20.	SPEAKER INTERCOM ASSY, B/U SAME				X	
21.	1/4 INCH HAND VALVE, B/U M512/479 VENT LINE					X
22.	M512/479 VENT VALVE(S)					X

*CRITICALITY CLASSIFICATION CHANGED PER CCBD
**COMPONENT ADDED TO CIL PER CCBD

Table 3.2.2-1 Critical Items List Summary (MDA)

safety (either flight or ground), damage to MDA hardware, or cause premature termination of the test. There were no failure modes identified which were unique to the tests. The flight article analysis was documented in McDonnell Douglas-East Report MDC E0415 Supp. I, dated June 1972.

As a result of this analysis one failure was identified as potentially hazardous to the flight crew and none were identified as hazardous to test personnel. The hazardous condition results from Experiment S190 window breakage with its safety shield removed. However, the likelihood of occurrence of this failure condition was considered to be remote because:

(a) The window was subjected to pressure tests (31 psi each side) after fabrication,

(b) Installed window integrity was checked during unmanned altitude chamber testing, and

(c) The safety shield, which was removed only momentarily for a fit check during the manned altitude test, would provide protection against rapid depressurization in the event of S190 window breakage virtually throughout the entire manned test.

The potential single failures which would prematurely terminate the test, but which would not jeopardize crew or test personnel safety were:

- Experiment S190 window breakage with safety shield installed.
- Experiment S191 window breakage (cover plate over window restricts rate of atmosphere loss).
- Experiment S192 window breakage (cover plate over window restricts rate of atmosphere loss).
- Four-inch vent valve assembly, inadvertent closure during test ascent phase.
- Safety system fire control (water system) water line rupture or solenoid valve leakage.

The backup article analysis was documented in MDAC-E Report MDC E0765 dated April 1973. There were no significant changes in the MDA analysis from that of the flight article.

3.2.4 Design Review

Design reviews were conducted at various phases of the program and reliability participation consisted of preparation and presentation of material and general surveillance of the reviews to assure reliability requirements were met. Identification of critical items and adequacy of retention rationale were specific topics addressed in each review. The chronolog of these major reviews is shown in Table 3.2.4-1.

3.3 ALERT INVESTIGATIONS

Alerts are issued on a regular basis through established channels. They warn of suspect parts, materials, or processes. The majority of Alerts received during the Skylab program did not impact MMC built hardware. Usually, it was found, the date code, or vendor, or part number, etc, did not apply to the components used on MMC built hardware. However, in several instances, the Alert did apply and positive appropriate corrective action was taken.

On MDA the Alert program was instrumental in accomplishing the following:

- Improved the quality and reliability of hardware by identifying suspect parts, material, and processes,
- Required engineers to reevaluate the existing circuit design to determine if the Alert was applicable. This, in turn, occasionally led to circuit redesign that improved the performance, quality, and reliability of the hardware.
- Provided a means of communicating with other NASA centers and other participants.

The following figures reflect a compilation of all Alerts submitted to MMC Denver by NASA/MSFC for closure action applicable to the MDA:

Number of Alerts identifying parts not used.	96 (39.3%)
Number of Alerts identifying parts or processes that have "no impact" on the MDA- Note: "No impact" means that the part or process is used; however, the vendor, or date code, or part number, etc identified on the Alert differs from those parts or processes used at MMC/Denver.	107 (43.5%)

	1970			1971				1972				1973	
	2	3	4	1	2	3	4	1	2	3	4	1	2
MDA RELIABILITY PLAN	△ APR												
PRELIM. FMEA & SFP LIST	△ APR												
FMEA & CIL (BASIC)		△ JUL											
MDA CDR		△ AUG											
FMEA & CIL (REV. A)			△ OCT										
FMEA & CIL (REV. B)					△ APR (ED 2002-2004)								
CIL BASELINE						△ AUG (ED 2002-2028)							
CIL DELTAS										△△ JUL	△	△△ FEB	
DESIGN REVIEWS		△ CDR						△ SOCAR	△ SAR		△ DCR	△ FRR	

Table 3.2.4-1 MDA Reliability Program Milestones

Number of Alerts identifying parts or processes requiring corrective action-	42 (17.2%)
Total Alerts submitted for closure-	245

ALERTS ISSUED BY MMC/DENVER - APPLICABLE TO SKYLAB

ALERT NO.	DATE	TITLE	PROBLEM - CAUSE
F3-71-01 CAPS SL-039 CAPS SL-039A	15-10-71	Semiconductor, Diode rectifier	Diode came apart during soldering operation-brazing operation during fabrication of diode was faulty.
F3-72-S01 SL-168	18-4-72	Capacitor, tantalum explosion under powered condition.	The explosion precluded determination of failure mechanism - probably due to capacitor being installed improperly as regards polarity. A safety bulletin was issued and OVRs included in the manufacturing process plans.
F3-72-01 CAPS SL-072	29-11-71	Crystals	Frequency was incorrect - poor or no solder.
F3-72-02 CAPS SL-128	24-1-72	Capacitor, fixed, wet tantalum	Electrolyte leaked from capacitor - over etching of glass end seals during lead cleaning.
F3-72-03 SL-115	23-2-72	Capacitor, tantalum wet foil	The leads fell off - improper reweld operation.
F3-72-04 SL-126	27-3-72	Material nonmetallic encapsulant	N/A - This Alert was cancelled by F3-72-04A.
F3-A-72-05 SL-157	30-3-72	Microelectronic circuit, OP AMP	Failed during prod. acceptance test - gold particulate contamination.
F3-A-72-06 SL-215	24-7-72	Resistor, variable, cermet, multiturn	Resistor wouldn't adjust - void in resistor case allowed potting compound to enter.

F3-A-72-07 SL-190	14-8-71	Transistor, PNP, power, planar, T059	Failed functional test - metallic contaminate.
F3-72-08 SL-209	24-6-72	Integrated circuit, dual inline package, ceramic	Cracks were found in ceramic fillet - thermal and mechanic flexing of DIP.
F3-A-73-01 SL-295	12-2-73	Material, nonmetallic	Astrovelcro had low value of pull-back retention force - the hooks on the discrepant material were mis-shapen.

ALERTS THAT REQUIRED MAJOR RETROFIT
OR
EXTENSIVE ENGINEERING INVESTIGATION ON SKYLAB HARDWARE

ALERT NO.	DATE	TITLE	PROBLEM-CORRECTIVE ACTION
*K4-70-04 *MSC-71-03 *MSC-71-03A *Same Subject is referenced.	11-11-70	Hardware, keys & pins, quick release pins (pip pin)	Pip pins used in hardware installed in the MDA, EREP & M509 were defective - pip pins were redesigned by vendor & tighter inspection criteria added to the specs.
GO-70-1	6-5-71	Capacitor, fixed ceramic	Several M39014/series capacitors manufactured by Potter shorted out. This type capacitor is used in the following Skylab hardware M093, M171, OBS, M509, EREP, & ILCA. The cause was poor construction and inadequate screening req. per MIL-C-39014.
**GSFC-72-10 **F8-A-72-01 **MSFC-72-25 **MSFC-72-25A **G2-A-73-01 **Same subject is referenced.	28-9-72	Resistor, fixed film	Metal migration of the resistive film due to the presence of contaminants caused the resistance of some Vamistor units to increase as much as 50% after approx. 200 hrs of operation at low power levels. In some applications resistors were replaced, in others engineering rationale was offered.

***F3-72-08 ***MSFC-A-72-12 ***Same subject is referenced.	24-6-72	Microcircuit, dual inline package, ceramic	Thermal & mechanical flexing of DIP caused cracks in ceramic fillet of the outer package - removed and replaced as required.
MSFC-72-4	28-2-72	Microdot/airlock connector assembly	The tolerance build-up between the plug and receptacle could allow loss of either electrical engagement or mechanical lock. Programs using this combination are: MDA, EREP, M509, OBS, GSE functional test set, M092, M093, T020, & T027. Special measurement tools have been designed to ensure compatibility.

3.4 CONCLUSIONS AND RECOMMENDATIONS

From a reliability viewpoint, three critical functions existed in the MDA that required concentration of effort:

- Maintenance of pressure integrity from launch of SL-1 through completion of SL-4 mission.
- Dock and entry to the SWS followed by egress and undock at the completion of each manned mission.
- Maintenance of MDA utilities vital to the accomplishment of mission objectives associated with the ATM and EREP experiment programs.

The MDA Reliability Program was designed to ensure achievement of these three functions with emphasis on the FMEA/CIL, parts and materials program, design reviews, failure reporting and evaluation, and inflight maintenance. Program attention was focused on MDA components related to the critical functions. These included docking equipment, hatches, pressure vessel penetrations (windows/vent valves), and MDA interfaces with ATM and EREP equipment (power/thermal conditioning). The success of this approach is demonstrated by the fact that mission objectives associated with performance of the MDA were met without exception.

A trade-off exists between redundancy and inflight maintenance as a means of compensating for equipment failure in future, manned, earth-orbiting space laboratories. Factors involved in selecting the optimum approach for each equipment failure must include:

- Criticality of the failure effect
- Safety
- Complexity of system interfaces with redundant components
- Weight and cost penalties
- Accessibility
- Tool and training requirements

4. QUALITY ASSURANCE PROGRAM

4.1 DESIGN REVIEW

Quality participated in many design reviews during the design phase of the MDA program. Participation in the reviews was either by an assigned Quality Project representative, who also followed the complete hardware build and test or, by Quality Engineering personnel. The Quality Program Manager designated what hardware Quality participation was required. This participation was required. This participation was normally based on complexity and criticality of hardware.

A design analysis check list was used by the Quality representative in performing design reviews. This check list comprised review to the following categories:

- Contract Requirements
- Specification Requirements
- Interface Requirements
- Inspectability
- Testability
- Repeatability
- Quality Tooling Requirements
- Personnel Training
- Process Application
- Tolerances
- Drawing Clarity
- Calibration
- Contamination
- Material Use
- Parts Use
- Receiving Acceptance

Quality was responsible for identifying many problems associated with contamination, testability, inspectability, calibration and documentation during these reviews. The surveillance of the S190 window and associated hardware by Quality is one example. Quality participated in Design Reviews at the supplier and was able to convey concerns of repeatability and handling to the supplier. These items were favorably resolved with the supplier. This hardware was closely controlled by Quality through build and test and Quality was a party to many decisions made concerning hardware resolutions.

During Design Reviews on electronic components, Quality identified the requirement for development of many non-standard processes (e.g., component bonding and multi-layer terminal board fabrication) for use in electronic component fabrication. In addition, Quality identified the requirement for and helped establish a system for component and wire traceability.

4.2 IMPLEMENTATION OF CRITICAL AND LIMITED LIFE COMPONENT DRAWINGS (CLLCD)

4.2.1 Denver and St. Louis

The Critical and Limited Life Component Drawings (82051000010 and 84000096100) were developed by Logistics Engineering using the technical input of the responsible Product Integrity Engineers (PIEs) for each component. Quality Project participated in several reviews of these documents with responsible departments and Quality requirements were incorporated prior to release. The documents were released with many hardware items open with respect to operational limits. This data was added to the documents as it became available to the responsible Engineering personnel.

The structure of implementing the CLLCD was established by Quality after initial release. This was accomplished in the test procedure and planning areas by recording of applicable requirements/limitations on a real time basis. Test procedures and manufacturing build planning were reviewed by Quality, and requirements incorporated to insure recording of CLLCD data. During the build and test cycle, Quality extracted data from the as-run test procedures and build records and incorporated the data in the Article Historical Records. These records then became a part of the Vehicle Equipment Log.

4.2.2 KSC Operations

All time/cycle sensitive equipment installed in the AM/MDA/OWS was listed in the integrated Limited Operating Life Item (LOLI) list by part number and listed time/cycle limitations. Each piece of equipment was assigned a separate item number (LOLI number). All work authorization documents (i.e., TCPs, Test Preparation Sheets (TPSs), and Discrepancy Reports (DRs) were reviewed to assure incorporation of LOLI numbers for any time/cycle sensitive items functioned.

Time/cycle operations that were directly observable by MMC Quality Inspection were entered on work authorization documents and verified by MMC Quality Inspection.

Time/cycle operations performed in integrated work authorization documents not covered by MMC Quality Inspection, and time/cycle data that was recorded on tapes, strip charts, etc., was extracted and summarized by MMC Systems Engineering and provided to MMC Quality Planning.

Completed work authorization documents and time/cycle data provided by MMC Systems Engineering were reviewed by MMC Quality Planning and time/cycle data was extracted, summarized and entered on Historical Records and in the LOLI Time/Cycle Usage Summary report.

The LOLI Time/Cycle Usage Summary was developed and maintained by Quality Planning to list all MMC LOLI items and to maintain a running summary of time/cycle usage for each item. All LOLI items were subjected to a continuous review by Quality Planning and Systems Engineering was notified when an item exceeded 75% of its allowed usage. The LOLI Time/Cycle Usage Summary also contained an estimate of projected future usage for each LOLI item for use in resolving potential problems of excessive usage prior to occurrence.

The CLLCDs were used at KSC as source data for determining time/cycle sensitive equipment to be listed in the LOLI list; however, review of Acceptance Data Packages (ADPs) for GFE (EREP and FCE) revealed additional items of time/cycle sensitive equipment not listed in the CLLCD and in some cases the GFE ADPs identified time/cycle limitations different from those listed in the CLLCDs. Also, review of the integrated LOLI revealed that some time/cycle sensitive items common to the MDA and AM/OWS were identified with different limitations in the AM and MDA CLLCDs.

4.2.3 Summary

The above procedure worked well at KSC and provided accurate data. The LOLI Time/Cycle Usage Summary report was a particularly good method for maintaining visibility of status of time/cycle usage and the inclusion of an estimate of projected future functioning/usage for LOLIs enabled replanning of some planned usage to reduce operating time/cycles sufficiently to prevent excessive usage.

The CLLCD drawings were developed with insufficient coordination or review of contractor/NASA imposed time/cycle limitations on GFE. This led to the disagreement in limitations identified above. Future CLLCD drawings should be reviewed and coordinated for GFE limitations prior to issue.

4.3 SUPPLIER EVALUATION

The evaluation of supplier performance was a continuous process from the time a supplier was selected through all hardware deliveries. This was accomplished through analysis of performance history and survey/audit results.

4.3.1 Receiving Inspection Records

Records were maintained for each supplier showing quantity of items received, quantity rejected and type of defect on a cumulative basis.

4.3.2 Latent and Source Defect History

Information was gathered for each critical hardware supplier showing source inspection and latent defect history. This information was obtained from reject history tab runs.

4.3.3 Surveys/Audits

The above information was compiled into monthly and quarterly performance reports showing total history for each supplier. These reports were utilized by Procurement Quality to establish the type and level of inspection surveillance required and the need for additional surveys or audits.

4.4 MATERIAL EVALUATIONS

4.4.1 Skylab MDA Chemical Analysis Quality Laboratory Support

A. Materials and Processes Analysis Support - The Quality Laboratory provided analytical test support for acceptance or rejection of incoming materials and process control and process development in support of manufacturing operations. Specific areas of test and analysis were:

- Spectrographic analysis on plate and sheet stock for Receiving Inspection.
- Particulate distribution analysis to verify part and system cleanliness.
- Control and maintenance of plating and milling baths.

- Testing of organic and inorganic coatings, adhesives, potting compounds and sealants for Receiving Inspection and maintenance of these materials through Manufacturing Process control testing.

B. Special Analysis Support - Special chemical analysis support was supplied to the program in many areas. Specific examples of tasks performed are:

- Analysis (spectrograph) of the hatch cover: The metallic portion of the cover was analyzed and determined to be per specification.

- Analysis of vendor nickel conductor wire: The material was determined to be nickel wire per specification.

- Coolant Solution: The Quality Laboratory provided development support and technical input related to writing and amending of SK820FL5729 (MDA Coolant System Fluids Kit).

C. Coolant Loop Corrosion Problem -

(1) Numerous coupon and tube tests were performed by the Quality Laboratory to determine the cause and aid in the solution of the coolant loop corrosion problem detected in EREP Tape Recorder S/N 3 at KSC. The tests included atomic absorption and emission spectrographic instrumental analysis, PH, solubility and the effect of galvanic cell on corrosion rate. The corrosion product was determined to be mainly phosphates of aluminum and potassium created by attack of the aluminum tubing from coolant solution at high (>10) PH.

(2) Quality Laboratory representation was present at the Coolant Loop Contamination meeting held at MSFC (11 April 1973). The purpose of the meeting was to standardize tests, to resolve differences between MMC, MDAC and MSFC personnel and to formulate a diagnostic plan to eliminate the corrosion problem. These were accomplished and no significant corrosion products have been seen in the coolant solution or filters removed from SL II or SL III.

4.4.2 MDA Radiographic Inspection Quality Laboratory Support

4.4.2.1 Radiographic Review at MSFC

A. Review of MDA Shell MSFC S/N 2 (Flight Article) radiographs (Oct. 20 through Oct. 22, 1970 at MSFC) - Two areas were rejected for defects not in compliance with MSFC Spec-504. These areas were as follows:

(1) Weld X5011-G film position 0-1: This was a repair area made by MSFC. The repair film showed an area of Lack of Fusion (LOF) located 7" from 0 towards 1 approximately 1/2 in. in length. MSFC's first evaluation of the LOF line in question was that the defect was a surface condition due to irregular grinding. The second opinion was that a scratch existed on the film in the repair area. A visual examination of the actual weld failed to reveal any surface irregularity in the reworked zone. An x-ray re-shot clearly showed the LOF line.

Disposition: X-ray image to be identified by MSFC in accordance with MSFC Spec-504 as Lack of Fusion and a weld repair to be made in this area by MSFC.

(2) Weld X5044A, Film Position 0-1: This area showed porosity with a sharp terminating point. This type of defect is considered in the same category as a crack.

Disposition: MSFC to make a weld repair in this area.

(3) A problem was encountered initially in properly identifying welds. The weld pictorials as presented were incorrect and did not match the film call out.

Disposition: MSFC to establish a satisfactory method for permanently marking weld identifications.

B. Review of MDA Shell MSFC S/N 3 (Backup Article) radiographs June 29 and 30, 1971 at MSFC -

Weld X5071E (Weld E) View 0-1: This area showed an Oxide Inclusion (dross line) not acceptable to MSFC Spec 504. Original disposition by MSFC for this weldment was No Defects.

Disposition: There was concurrence by MSFC on the defect. Item was documented for disposition and was to be repaired by MSFC.

4.4.2.2 Radiographic Review at MMC-Denver

The Quality Laboratory provided review of all radiographs taken by Manufacturing on the MDA Flight Article and Back-up Article. This review included:

A. Flight and Back-up Articles -

(1) Radiographs taken upon arrival of the article at the MMC Denver facility.

(2) Radiographs taken after cutting the shell penetrations and installing close out fittings before MMC proof pressure.

(3) Radiographs taken after proof pressure.

Results: There were no rejections as a result of these reviews.

B. S190 Window X-ray Test - The purpose of this test was to determine degradation in Glass Samples after x-ray exposure. The Back-up Article S190 window was suspected of being exposed to x-rays at St. Louis. It was not known if the dosage received would effect significantly the optical qualities of the window. The testing performed in the Quality Laboratory was to complete the definition of potential radiation effects upon the S190 window.

Results: Four samples were exposed to four doses of 108 milliroentgens of x-radiation, then taken to Optics for measurement of their transmission and comparison to a sample not radiated. A direct comparison showed that there was no degradation in the glass or the glass coating.

C. Radiographic Inspection of 82000002720-002 Hatch Seals - These seals are used on the pressure hatches, both axial and radial of the MDA. Radiography was performed for indications of voids within the seals after a seal used for engineering evaluation had been found to be deteriorating. The seal was deteriorating to the point where many irregularities were showing up on the surface of the seal. It was at this stage that the radiography was performed and the voids were found.

Results: Six seals which had passed the hardness check were removed from stock and radiographically inspected. Three seals were rejected for voids. Further action was then taken to have the supplier (Kirkhill) perform radiography on all future fabrication of seals and no voids would be allowed.

D. Radiographic Inspection of the MDA Hatch Cover - A hatch cover was damaged as a result of a steel stamp impression over the honeycomb area. Radiography was performed to determine the extent of the damage to the honeycomb.

Results: After radiography the cover was repaired and radiography was performed again after repair to verify the fix.

E. Miscellaneous - Spot radiography was performed on the MDA Handling Rings and Film Vaults to determine weld quality.

Results: There were no rejections as a result of this inspection.

4.5 PROCUREMENT CONTROL

The procurement of hardware for this program was accomplished in accordance with requirements established in the MDA Quality Program Plan ED-2002-1003. This plan was compiled in general accordance with NHB5300.4 (1B) and meets the requirements of that document. These requirements were imposed on hardware suppliers by imposing Martin Marietta document M-64-119 (Supplier Quality Assurance Program) on purchase orders. Document M-64-119 had been updated to satisfy the MDA Quality Program requirements.

In addition to the above requirements, the following actions were taken because of the Manned Space Flight application of this hardware and due to the procurement activity occurring over a relatively short time span and involving relatively small quantities of each item of hardware.

4.5.1 Procurement Quality Support to Program

Procurement Quality provided full time representation to the program in the form of technically competent personnel to develop program plans, provide requirements, participate in program reviews and interface with Reliability for final prediction analysis.

These same people were utilized to convey the established requirements to the Procurement Quality representative at the source in order to acquaint the field effort with the intimate details of the program. Consequently, each Representative in the field knew the ultimate goal of the hardware, based on criticality, where incipient failures may occur and the extent of coverage necessary.

4.5.2 Reliability Inputs to Procurement Quality

Procurement Quality provided a direct interface with Reliability Engineering. Utilizing predictions generated by this group, with special emphasis on "Single Point Failure", Procurement Quality then fed these data into one or more of the following:

- Supplier Selection
- Design Reviews
- Manufacturing Planning
- Process Control
- Acceptance Testing
- Qualification Testing
- Special Handling Instructions

By concentrating on Single Point Failure analysis each of the above points could be properly evaluated to ensure that disciplines could and did exist to accommodate the prediction. The criticality assessment was utilized to determine the extent of Procurement Quality coverage.

4.5.3 Motivation

During the course of Skylab, certain key personnel were selected to provide motivation to supplier management and employees. Utilizing the criticality list generated by Reliability and in the company of Quality and Engineering, as well as NASA, visitations were arranged to acquaint supplier personnel with the goals of Skylab. Talk presentations, decals, and "Manned Awareness" literature were circulated to over 30 suppliers of critical hardware to the MDA program.

4.6 TEST PROCEDURE APPROVAL/FIRST USAGE VALIDATION

MDA test procedures were written by the Test Department to Engineering requirements. All acceptance criteria was based on contract requirements as defined by the MDA STACR. All procedures were reviewed and approved by Quality to insure adherance to contract requirements and for inclusion of Quality buy offs for acceptance criteria.

Prior to start of test, a validation test team comprised of Quality, Test, Engineering and the customer met to review test requirements and accomplishments. Quality identified all outstanding work items that were open on the system to be tested. These items were coded for time line accomplishment. Those items directly affecting the test were listed on a "Certificate of Readiness to Test" as prerequisites to test start. As the open work items were completed, they were acceptance stamped by both Quality and the customer. Upon completion of all open work items, the form was signed by the test team signifying acceptance of test start. The "Official Copy" of the test procedure was maintained by Quality during test. The procedure was redlined accordingly as the procedure was validated on a step by step basis. At the completion of test, the validation team signed the official copy in the appropriate signature blocks signifying acceptance of the "as run" procedure. All redlines were then incorporated into the master copy of the test procedure and submitted to Quality for checking and acceptance. After release of the updated procedure, it was reviewed with the customer and closed out. The procedure was then maintained in Quality Record Retentions in accordance with contract requirements.

The team concept for test validation as described above proved to be an accurate and expedious means of assuring that all test requirements were accomplished to contract requirements.

4.7 NONCONFORMANCE/FA EVALUATION

4.7.1 Nonconformance Reporting and Related Corrective Action

Prime responsibility for resolution of reported Skylab nonconformances was vested in the Skylab Mission Success Corrective Action Control Center (CACC).

4.7.1.1 Skylab Mission Success Responsibilities

- Review all non-conformances that occur for failure mode, and previous history.
- Apprise management of Major Impact Problems and Program Impact.
- Define and coordinate corrective action tasks. Manage problem resolution.
- Define failure analysis requirements. Review and approve analysis results.
- Establish and maintain general liaison with associated departments and personnel.
- Prepare written reports on Major Impact Problems.
- Provide information for control center displays of open problems.
- Issue Discrepancy Check and Report (DC&R) (see paragraph 4.7.1.2.B (4)) whenever problem warrants.

4.7.1.2 Skylab Corrective Action Control Center Functional Description

The CACC reviewed each nonconformance to ascertain the cause of the problem, assured that adequate corrective action was implemented to prevent recurrence of the nonconformance, and provided a visible display of the current status and impact of all program problems by use of a group of display and status boards located in the Control Center.

A. Nonconformance Reporting - The Skylab program management required that all problems be reported and cleared through the CACC. The CACC actively participated in the trouble-shooting and failure analysis efforts and by company policy was responsible for the direction of investigative and corrective actions and approved all problem closure actions. This was accomplished in the following manner:

(1) Nonconformance Reports - The Martin Automatic Reporting System (MARS) was used for nonconformance reporting to the CACC throughout the MDA fabrication and test program at MMC Denver, MDAC-E, and critical suppliers.

During the assembly and test operation at KSC on the Flight Article MDA, the KSC DR was used for reporting nonconformances. All DRs generated against the MDA and installed FCE and experiments were reviewed by CACC. MARS were written by MMC Denver for the nonconformances identified on DRs against MMC supplied hardware that required corrective action or failure analysis by MMC Denver.

Figures 4.7.1.2-1 and 4.7.1.2-2 reflect the monthly count of MARS and DRs. Significant events during fabrication and test are also shown to relate quantities of nonconformances to hardware activities.

(2) Telephone Alert - Telephone alerts originated from those areas which generate MARS. A nonconformance, which in the opinion of the cognizant Quality Supervisor, represented a potential program impact was immediately phoned to the CACC. The problems generally fell into one of the following categories:

- The nonconformance was considered to be a safety, mission, or major failure.
- A defect which was found past its initial acceptance point.
- A system failure which could not be immediately isolated to local Martin workmanship and fixed in place without component removal.
- Any nonconformance found during manufacture or acceptance which could have been inherent in other previously installed or accepted hardware.
- Any failure which would hold up test and/or delivery of that or other similar hardware.

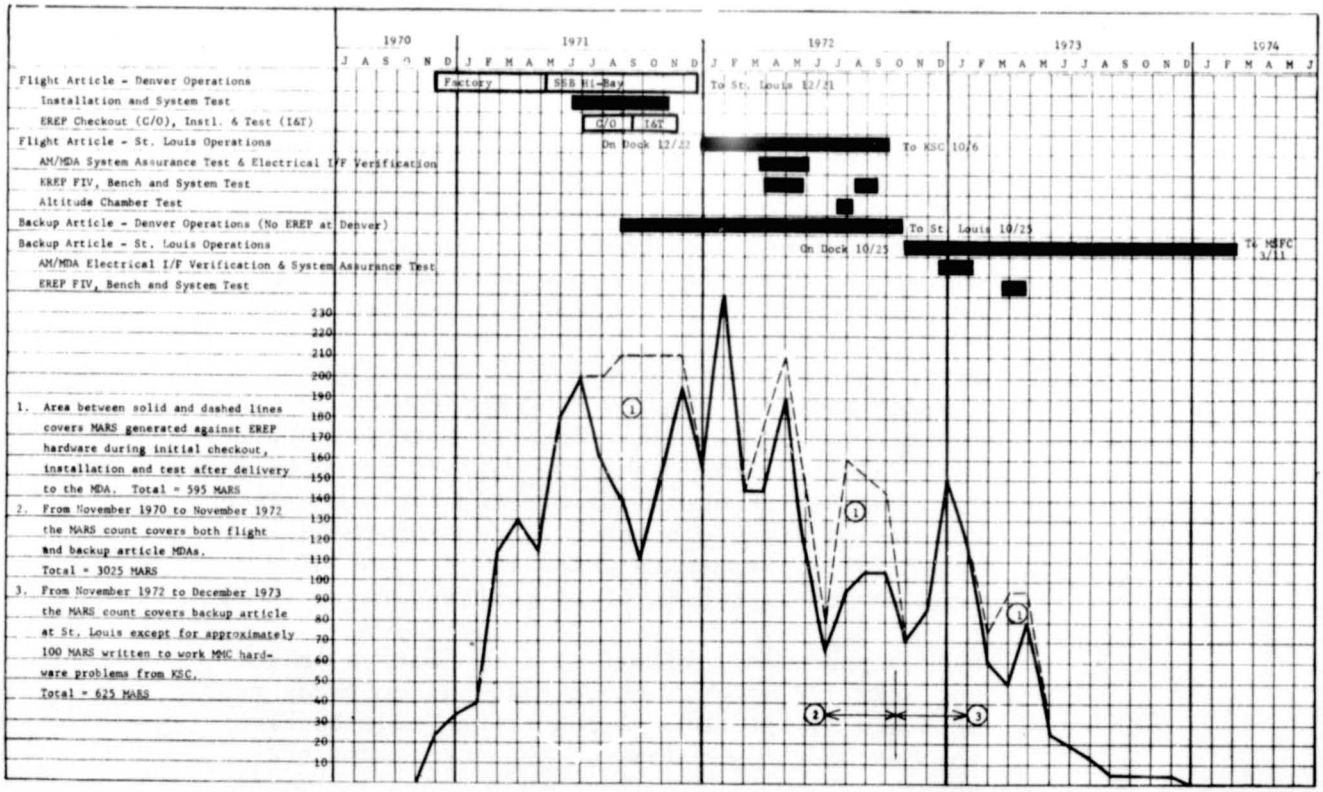

Figure 4.7.1.2-1 MDA MARS vs Schedule Summary

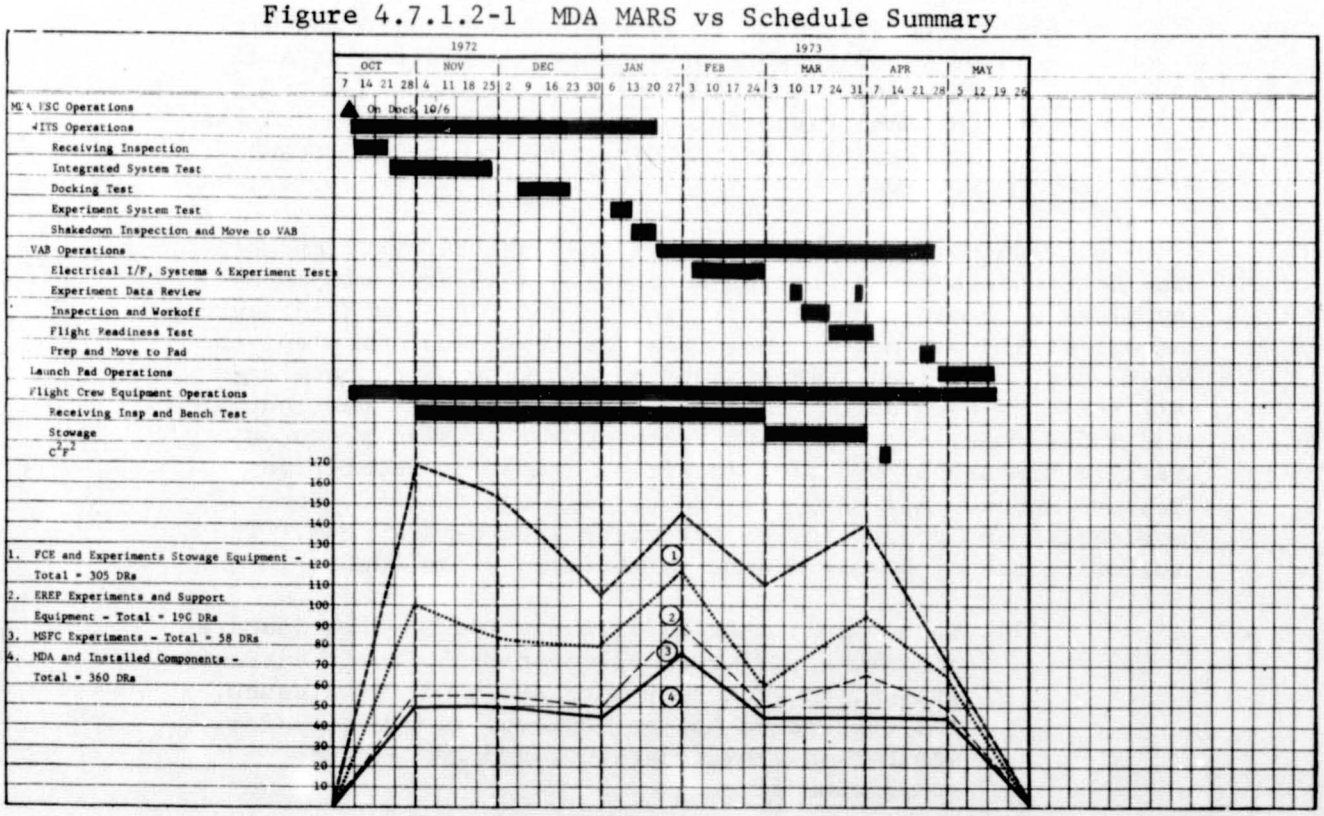

Figure 4.7.1.2-2 MDA DR vs Schedule Summary

The Quality Supervisor identified the problem, its cause if known, its impact on the program and corrective action, if known. A Corrective Action engineer was immediately assigned to assess the impact on the program and initiate actions necessary to correct the problem.

(3) Suspect Material Reports - The CACC received Suspect Material Reports from the Customer Plant Representatives Office. Suspect Material Reports were "Alerts" from other contractors doing business with the Department of Defense Agencies and NASA concerning discrepancies or nonconformances in materials or processes which in their opinion could have existed in other contractor programs.

Each report was reviewed by a Corrective Action engineer for its effect on material or processes utilized by the MMC. A report was made back to the customer regardless of the outcome of the search.

(4) Trend Reviews - Trend reviews were held monthly by the Directors of Quality, Manufacturing and Materiel. The CACC was required to account for the MARS Disposition and Corrective Action to the satisfaction of the Directors during the trend reviews.

B. Nonconformance Statusing for Flight Hardware Anomalies - The CACC maintained a Control Room which displayed all open problems both minor and significant in order that a high degree of visibility was maintained. Besides its visual display, the CACC also maintained a mechanized data system which cataloged all failures both significant and insignificant by part number and index code. Special runs by the computer also produced failure history by vehicle, location, cause, or repetitive failure modes. All MARS were routed through the CACC for evaluation and processing to the mechanized data system. The following visual displays were maintained by the CACC:

(1) Open Significant MARS Status Board - The board at all times reflected all open MARS, their current status, to whom they were assigned for closure, the Corrective Action engineer responsible for monitoring closure action, and the planned completion date.

MARS were received by the CACC, screened and logged in. The initial screening separated non-critical MARS covering non-serialized hardware which was discrepant because of normal wear, expired shelf life, insignificant paper work errors, etc. The remainder of the MARS were distributed to individual Corrective Action engineers who had particular specialities within the Discipline.

The Corrective Action engineer reviewed the MARS for the following:

- To see that the MARS had been properly completed.
- To determine the mode of failure from the description of the nonconformance on the MARS.
- To determine if the cause had been properly identified and documented. If cause was not known he would authorize a Failure Analysis (FA).
- To assure that the Corrective Action documented had been implemented and would prevent recurrence of the problem.
- To assure that proper retest was initiated and that no unverified failures were in the system.

Upon completion of the review, the CACC would code the MARS for the following items:

- Cause of the nonconformance.
- Failure mode.
- Whether the nonconformance was a design problem where the engineering was at fault or a practice problem where procedures or personnel were affected.
- Whether KSC, MDAC-E or Denver was responsible for corrective action.

- The criticality of the nonconformance. Did it affect flight performance (Mission Critical), planned launch on time (Launch Critical), personnel safety (Crew Safety) major significant or minor.

- The type (if any) of the FA to be performed.

- Whether the problem was still open requiring further action or was closed with adequate corrective action implemented to prevent recurrence of the problem.

- The disposition of the hardware.

The MARS which were coded open were posted on the open significant MARS status board. Those that were Crew Safety Critical, Mission Critical, or Major required that a Corrective Action Problem Summary (CAPS) report be opened and they were posted on the Major Impact Board.

The Corrective Action engineer would assign the closure or corrective action to the organization responsible for implementing the action. He would establish a need date for the action in keeping with the actual needs of the program.

Once the item was placed on the board, the Corrective Action engineer would continually monitor the progress of the item and make additional assignments as necessary to effect an adequate and timely solution to the problem. Red flags were assigned where due dates were passed or which had been open for more than 60 days.

Items were removed from the board only when corrective action had been implemented as documented on a MARS Corrective Action Closure Report. The Closure Report was approved by the Section Chief of the responsible area and the cognizant Corrective Action engineer.

(2) FA Status Board - When the cause of a nonconformance was not known or readily discernable, a failed parts analysis was required. The FA Status Board represented the status of all failed parts analysis efforts whether the analysis was being performed at the Denver Failure Analysis Laboratory, at the vendor's facility, or at the launch sites. Figure 4.7.1.2-3 depicts the FA activity during the MDA program. The board showed the current status of each analysis, its impact on the program, and the promised completion date. These problems were also statused on the open Significant MARS Status Board. The FA Status Board highlighted the failed parts analysis efforts and placed added emphasis on that category of problems. Until cause was known, each problem was a potential program impact.

FAs were closed only after careful review by the Corrective Action engineer, assuring that adequate corrective action had been implemented to preclude recurrence.

(3) Flight Anomalies Board - The CACC participated in vehicle post flight Quick Look meetings and significant data review. Items resulting from those reviews were posted on the Flight Anomalies Board. The CACC assigned a Corrective Action engineer to each item for review of positive corrective action and/or its potential effect on other flight articles. Some items coming from this review resulted in the opening of a CAPS report and the posting of the item on the Major Impact Problems Board.

(4) Discrepancy Check and Report (DC&R) Status Board - A DC&R was initiated whenever it was suspected that a discrepancy might exist in hardware already accepted or delivered (Figure 4.7.1.2-3 depicts the MDA DC&R activity). The discovery of the discrepancy was usually the result of the investigation of an open significant MARS or an Alert (refer to paragraph 3.3 for Alert Investigations).

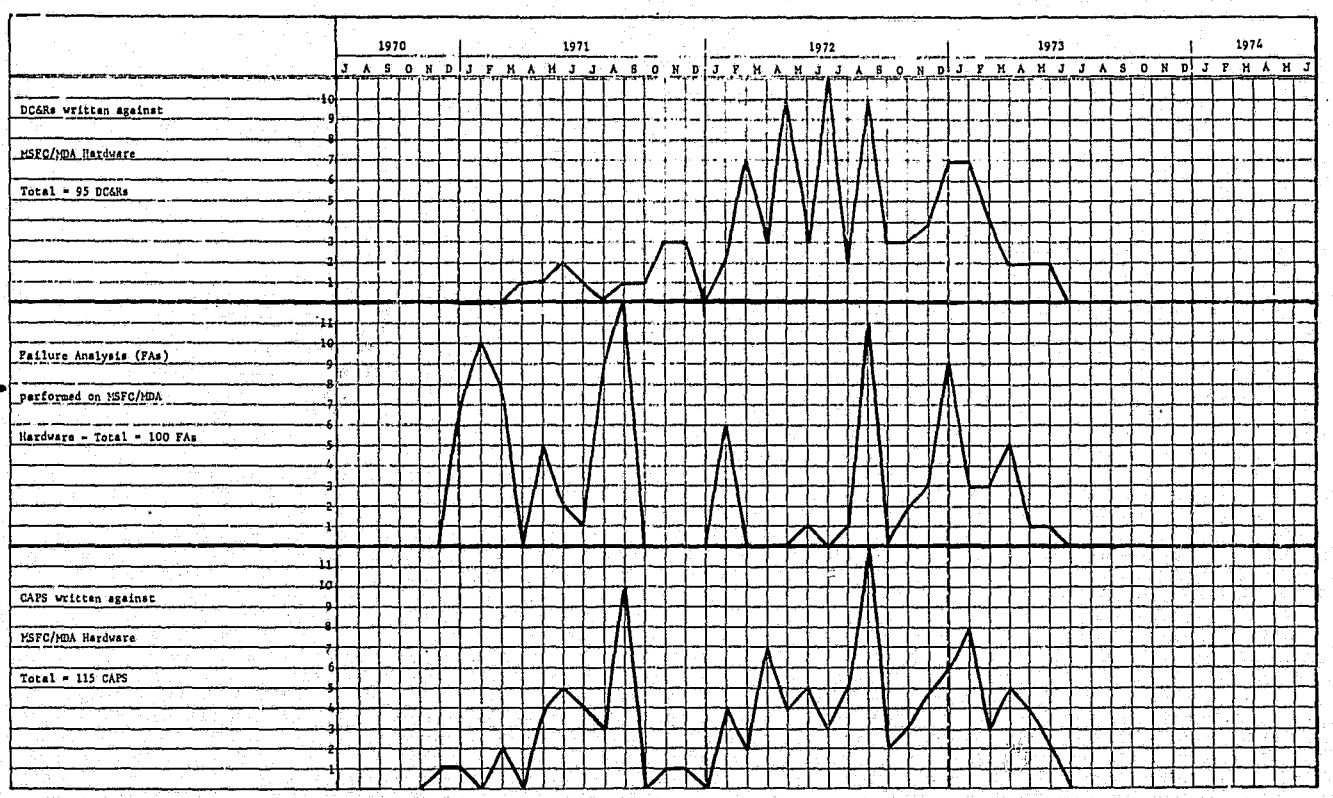

Figure 4.7.1.2-3 MDA DC&R, FA, and CAPS Summary

The DC&R was originated and controlled by the CACC. It assigned action items to Quality agencies to search out all hardware suspected of containing the nonconformance, specified an inspection program, dispositioned the affected hardware, and specified the system's retest requirements where applicable.

The DC&R was statused against each vehicle, spare and the stockrooms at Denver and the launch site. The Board reflected current status of each DC&R.

A DC&R was removed from this board when all actions assigned by the DC&R have been completed.

(5) Major Impact Problems Board - The Major Impact Problems Board provided a graphic display of problems identified from all sources which were considered to have greatest impact on the program. Problems which were displayed on this Board fell into one or more of the following categories:

- Safety Critical - any failure which had degraded or could degrade crew safety.
- Mission Critical - any failure which had degraded or could degrade mission success or launch-on-time probability.
- Major - a failure which, by itself, was not critical as defined above, but could have become so in the event of a second failure (such as might occur in redundant systems).
- Nonconformance which would significantly delay end-item acceptance test and/or delivery.
- Any problem which in the judgment of responsible Martin Marietta or customer personnel, could have had a degrading effect on Mission Success, crew safety or launch-on-time capability.

- Recurrence of any of the above nonconformances after corrective action had been implemented.

- The recurrence of any failure mode (not in the above categories) on any critical component that indicated a problem in the judgment of responsible Martin Marietta or customer personnel.

- Whenever a DC&R was issued or when airborne hardware was removed from a vehicle on-pad at the launch site.

Each problem statused on the Board resulted in the initiation of a CAPS report (Figure 4.7.1.2-3 depicts the MDA CAPS activity). The report was utilized to document the series of events which led up to the decision to open a Major Impact problem, record and assign the action items necessary to understand and resolve the problem, and to document the final corrective action which was utilized to close the problem. The NASA RMO concurrence was obtained prior to closing the CAPS. The CAPS report therefore became a documented history of the problem from "cradle to grave".

The Major Impact Board was arranged so as to give the observer an instantaneous picture of all major problems open and their current impact on the program. The Board displayed the following information:

- Part name.
- Part number.
- Brief description of the problem.
- The cause, if known.
- The current status of the problem.
- Impacts on current Martin and vendor builds.
- The name of the person responsible for closure actions as the assignee and the name of the Corrective Action engineer who would monitor all actions in depth.
- The date the CAPS was opened and the planned closure data.
- The problem or report number.

4.7.1.3 Skylab Mission Success Interface

Skylab Mission Success (CACC) maintained continuous and effective lines of communications with the customer concerning anomalous conditions. This was accomplished in several ways as outlined below:

A. Daily morning meetings - The customer (NASA & AFPRO), CACC Engineers, and other concerned personnel participated in a morning telecon placed with MMC Quality personnel at KSC to inform all participants of current activity and those problems requiring resolutions.

B. Weekly CAPS meetings - Updates to the previous weeks "open" CAPS were the main subject at a meeting held to insure the customer concurred in the completed and proposed corrective actions as identified in the CAPS.

C. Documentation requiring concurring signatures - Several forms (DC&R, MARS, Unsatisfactory Condition Report (UCR), etc.) used to report nonconformances and related corrective actions were submitted to the customer for signature.

4.7.2 Skylab Mission Success Data Retention and Rapid Retrieval System

A. Purpose - The Skylab Mission Success Data Retention and Rapid Retrieval System provided for the collection, classification, filing and rapid retrieval of all Skylab nonconformances and corrective action data. To assure rapid access and retrieval, the files were segregated by program system and/or experiment, arranged in alpha-numeric sequence, and appropriately color coded and cross referenced.

B. Procedure - This system consisted of the following:

(1) Master Index Card File - The Master Index Card File contained a separate 3x5 card for each MARS processed. Information contained on the card included applicable part numbers, nomenclatures, defect description, FA number, cross references (if any) and MARS number.

(2) MARS Master File - MARS copies received through the normal MARS distribution system were categorized as a function of MARS status (open, advance, closed etc.) and program system and/or experiment type.

(3) CAPS Master Files - Open CAPS require periodic updates to reflect on-going corrective actions and so were held in an active file. Closed CAPS, along with all applicable information compiled while the CAPS was Open, were placed in individual folders and arranged in alpha-numeric order.

(4) Failure Analysis - All FAs were filed in alpha-numeric sequence and a log was maintained with suitable cross references.

(5) DC&R - All DC&Rs were filed in alpha-numeric sequence and a log was maintained with suitable cross references.

(6) KSC DRs - All KSC DRs were filed in numerical sequence.

4.7.3 Skylab Mission Success Program Audit

The Skylab Program audit function was utilized as a management tool to evaluate the performance of all program elements to insure mission success. All activities of the Manned Space Systems operations that contributed to mission success were audited and/or reviewed including program and support planning. These audits were based on program direction.

A master audit/review plan was prepared and approved by the Skylab Mission Success Department providing for all audit/review requirements. This plan identified specific audits to be performed for the particular activity and contained sufficient detail to insure complete evaluation of the specific areas of the subject being audited.

The types of audits were (1) standard audits for assessing working systems, processes, methods, and operations (2) non-standard audits performed to coincide with time and event based

activity, (3) special audits that may be requested of activities, systems, or procedures as they were deemed necessary, and (4) spot audits initiated on a random basis by a phone call from the CACC Chief. The spot audits were usually performed by the inspector in the area and covered such subjects as housekeeping, current procedures, proper handling, etc.

The audit plan identified periodic program level reviews of all activities considered prime requisites to mission success, including:

- Safety
- Reliability
- Test
- Operations
- Maintenance
- Logistics
- Human Engineering
- Maintainability
- Quality Assurance
- Contamination Control
- Training & Certification

The audit function was designed to aid in the achievement of 100% mission success. Specific objectives were as follows:

- Provide a management tool to evaluate the mission success performance of all elements of the Manned Space Systems Operation.

- Provide a means of uniform assessment of all activities.

- Conduct audits and program planning reviews to identify specific items that adversely affect mission success.

- Plan corrective actions through the use of Corrective Action Directives.

- Develop and maintain resolution status of a formal list of mission success critical items.

- Prepare action items and data for hardware and program milestone reviews and meetings (e.g. Design Certification Review, Flight Readiness Review, etc.).

The Manager of Skylab Mission Success was responsible for the organization and conduct of a Quarterly Review with program and line organization management for the purpose of evaluating the progress of the Skylab program. This management review assured that all functions were dynamic and aligned with the Skylab program needs.

4.7.4 Skylab Program Audits Conducted By NASA

A. Audits of MMC Denver Operations - One major audit/survey was conducted by NASA MSFC in October 1970. This audit occurred prior to commencing MDA hardware fabrication; therefore, the NASA audit team could evaluate only MMC's Planning, Policies, and Procedural Controls.

The NASA audit team's findings consisted of 15 observations and 16 discrepancies, none of which was a significant item. The MMC initiated immediate corrective action. The formal Audit/Survey Report (S&E-Qual-70-11) was received by MMC Denver in December 1970. Closure action for all findings was completed in February 1971.

In addition to the above, the following reviews were conducted by NASA "Blue Ribbon Committies":

(1) A "Critical Mechanisms Review", consisting of a review of MDA Single Failure Points.

(2) A "Second Look" critical items review of launch and docking critical hardware from the design phase through final systems test.

B. Audits of MMC KSC Operations - Two major audits/surveys of the MMC KSC Operations were conducted by the NASA KSC Quality Survey Office.

The first audit/survey was conducted in March 1972, prior to MMC receiving hardware, and consisted of a review of the MMC Planning and Procedures. No items requiring a written response were identified from this audit/survey.

The second audit/survey was conducted in December 1972. The MMC initiated corrective action immediately based on the preliminary report of findings. The formal Survey Report was received in February 1973 and identified 13 observations and 25 discrepancies (primarily dealing with deficiencies in recording data and maintaining records). All of these items were closed by March 1973.

4.8 CONFIGURATION VERIFICATION AND CHANGE ACTIVITY

4.8.1 Denver and St. Louis Configuration Control

The configuration of the Flight and Backup MDAs was controlled by use of the mechanized tab run system and supplemented by shop folder, Manufacturing Process Plans (MPP) Mission Preparation Sheets (MPS), Test Preparation Sheets (TPS), and Modification Instructions (MI). Quality involvement was as follows:

A. Mechanized Tab Run - Mechanized tab runs which contained the complete hardware status were used to verify configuration. Tab runs were monitored by all affected Quality organizations for open work items to be accomplished. Quality verification of incorporation was required for closeout of all open tab run items.

B. Shop Folders - Shop folders were used for fabrication of details and sub-assemblies. All shop folders required Quality verification for completeness, Quality inspection points and incorporation of latest change prior to release for build. All changes incorporated in shop folders prior to issuance were bought on the tab runs by Quality Planning as an incorporation into the MPPs. All changes released after issuance of shop folders or not incorporated required an issuance of a Change Notice to be attached to folder, which required Quality inspection verification and submittal of buyoff for tab run.

C. Manufacturing Process Plans - MPPs were issued for build of all assemblies and end items. MPPs were issued at a serialized level and was the first point where assemblies could be identified with an end item usage. MPPs were required to meet all requirements of the shop folders.

D. Liaison Calls (L/Cs) - L/Cs were written to Engineering for drawing changes required to complete build assembly or modifications of hardware. L/Cs written during the generation of a shop folder, MPPs or MIs were included and required Quality verification of released engineering to L/C prior to acceptance of hardware. L/Cs written during performance of work or assembly were documented on Quality Work Sheets and required Quality verification of released engineering to L/C prior to acceptance of hardware. All engineering released to cover work performed to L/Cs required a Quality inspection submittal to tab run to close out open items.

E. Recap and Movement Authorization (Recap) - Recaps generated and approved by Quality were used for movement of hardware from one work area to another area. Recaps contained all open work items required to complete the hardware specified.

F. Material Inspection and Receiving Report (DD-250) - DD-250s were used for acceptance of hardware and shipment. DD-250s required all shortages and waivers to be included and signature of authorized government representative and Quality. Closeout of shortages and waivers required issuance of another DD-250 outlining items to be closed. DD-250s were required for shipment of modification kits to off-site usages and required Quality validation prior to shipment. Incorporation of modifications/kits in Denver and St. Louis required Quality verification of incorporation and submittal of DD-250. Modifications/kits installed at KSC did not require DD-250s.

G. Modification Instructions - MIs were required for all hardware changes after acceptance on a DD-250 and required Quality validation prior to issuance. Upon completion of modification to the MI, Quality was required to:

- Complete Modification Instruction, including sell-off to NASA Rep.
- Complete Installation Notice Card.
- Complete DD-250 including sell-off to NASA Rep.
- Complete and submit Manufacturing incorporation verification buy-off transmittal for close out of open items on the tab run.

H. Installation Notice Card (INC) - INCs were required for all modifications performed after acceptance of end items, and required Quality verification. INCs were submitted to MSFC to close out the Configuration Identification Index and Modification Status.

I. Mission Preparation Sheets (MPS) - MPSs were used in St. Louis to control configuration of the hardware. All hardware changes by Modification Kit or L/C required a Quality approval, and were not closed for L/Cs until engineering was released and Modification Kit received. Numbers for MPSs and a log of all MPSs were maintained and controlled by Quality.

J. Part Number Changes - Assignment of unique part numbers to each piece of hardware was used to control the configuration of the hardware. Each time the configuration was changed after initial release the part number was changed, except in the following conditions under which the part numbers were not changed:

(1) If a design change was released to reflect the "as built" configuration, Quality verified that the design change was incorporated in all units. Quality verification was for fabricated hardware, hardware in fabrication and included updated Process Plan shop folder for subsequent hardware.

(2) If a design change was released to change configuration of hardware that was not yet procured, built or accepted and Quality could ensure incorporation of design change prior to procurement, build or acceptance.

4.8.2 KSC Configuration Review and Control

A. Receiving Inspection Configuration Review - All hardware received at KSC was inspected by MMC Quality Receiving Inspection. Each item of hardware was evaluated for ADP requirements.

Receiving Inspection reviewed the ADP to assure acceptability of the hardware for special handling requirements, and for identification of open work or test. The ADP was then forwarded to the MMC Quality Record Center.

The Quality Records Center performed a detail review of the ADP for open work/tests.

B. Open Work/Test Statusing -

(1) MDA - All open work/tests on the MDA were identified in the MMC Open/Deferred Work Document ED2002-2045, Certificate of Flight Worthiness (COFW) Endorsement No. 2, Log of Exceptions (LOE), and Deviation Approval Requests (DARs) 22, 23 and 24.

MMC Quality was directed by NASA/KSC to list all of the open work items on a separate log, list the KSC document (i.e. TCP/TPS/DR) that would close the open work item and deliver the log, reflecting closure of all items, prior to launch. This log was developed by MMC Quality and Project Engineering as the MDA Open/Deferred Work Compliance Matrix.

The Open/Deferred Work Compliance Matrix was reviewed by NASA/KSC Quality and Engineering for assurance that all open work/tests items were listed. MMC Quality reviewed the referenced TCP/TPS/DR, when completed, to verify satisfactory closure of the open work/test items, obtained NASA Quality concurrence and delivered the completed matrix to NASA Quality.

(2) GFP, Experiments and Flight Crew Equipment - ADPs for hardware received separate from the MDA were reviewed for open work/test items and any items discovered were recorded on DRs. The DR was tracked and the open work/test items were closed in the same manner as described above for the MDA Open/Deferred Work Compliance Matrix.

C. Configuration Control - The configuration of the MDA was tracked and controlled by the use of TPSs, TCPs, Parts Installation/Removal Records (PIRRs) and Temporary Installation Records (TIRs).

(1) Installation and removal (either temporary or permanent) of flight hardware was tracked by use of PIRR forms or TCPs.

The TCP had an entry verified by MMC and NASA Quality to assure recording of permanent installations or removals and to assure re-installation of temporary removals.

Flight hardware removed or installed per TPSs and DRs was recorded on PIRRs. The PIRR entries were closed only when satisfactory installation or re-installation of removed parts was complete. Prior to launch all MDA PIRRs were reviewed to assure satisfactory closure.

(2) Temporary installations of either flight or non-flight hardware, unless installation and removal was performed in a TCP, was tracked by use of TIR forms. Also, a "Remove Before Flight" red streamer was attached to the part.

Each temporary installation was recorded on the TIR form and cross referenced to the serial number of the red streamer attached to the hardware. The TIR entry was closed by MMC and NASA Quality verification of removal.

Red streamers were assigned serial numbers and tracked by listing in a log.

Prior to launch all TIRs were reviewed by MMC and NASA Quality to assure closure and all red streamers were accounted for.

(3) TPSs were used at KSC to incorporate hardware changes. TPSs were not reviewed or validated by Quality, but Quality did control the assignment of TPS numbers and were required for close out of TPS. TPSs that worked configuration changes other than by released engineering required Quality verification of released engineering to TPS prior to close out of TPS. DD-250s were not required for hardware changes by TPS and/or by Mod Kit incorporation. INCs were required only for those hardware changes that were a result of engineering released in Denver.

D. Summary - The use of PIRRs and TIR provided an accurate accounting of the MDA configuration. Attaching red streamers to temporary installations gave additional assurance that all installations were complete and non-flight items were removed prior to launch. On future programs, the requirement to use PIRRs/TIRs and red streamers should be imposed in the beginning of the program at the module contractors plant.

4.9 QUALIFICATION TESTING

The MMC Quality role in the qualification test program consisted of verification of hardware configuration, failure reporting and corrective action, and monitoring Qualification Status.

A. Configuration Verification - MMC Quality verified that the item of hardware selected for Qualification Testing was built to flight configuration and had been subjected to the same test and quality surveillance/verification as flight hardware.

After the item of hardware had been selected for Qualification Testing, MMC Quality assured the item was identified as "Test Usage" hardware to prevent subsequent use as flight hardware.

Prior to the start of Qualification Testing, MMC Quality verified proper set-up of testing hardware/fixtures.

B. Non-conformance Reporting - MMC Quality assured that all discrepancies detected during testing were reported on MARS and that corrective action was completed.

C. Qualification Status - MMC Quality at KSC verified documentation was available in the MDA ADP certifying completion of Qualification Testing prior to launch of the Flight MDA.

4.10 MANUFACTURING IN-LINE SURVEILLANCE

4.10.1 Team Assignment Philosophy

Quality provided technical support for the various phases of design, manufacture and test of all MDA hardware. The hardware consisted of mockups, trainers, flight, backup and associated Ground Support Equipment. Special emphasis was placed on critical space hardware whereby selected Quality personnel were assigned as specialists to handle all matters pertaining to Quality and to provide an interface with the AFPRO Quality and NASA RMO Quality personnel.

A Quality Representative was assigned to the MMC Huntsville Operations. The role of the Quality Representative included close liaison with the MSFC Quality, Manufacturing, Engineering and the Receiving agency. All hardware provided by MMC to MSFC for the MDA passed through NASA receiving inspection. Problems with NASA at the NASA receiving facility with regard to detail fittings which MMC was contracted to build were encountered. The problems were mainly due to interpretations of documentation or lack of documentation. These problems were worked through the MMC Quality Representative and resolution was fast and effective.

MMC should always have knowledgeable personnel at the customer's facility when deliveries to the customer are made. This is especially true if deliveries are made over a long time span and consist of a variety of items. Furthermore, MMC should have a complete understanding of the customer's needs which include data requirements and system differences.

In addition to a Quality Representative permanently located at MSFC, it would have been desirable to have the Quality factory supervisor responsible for the MDA assigned TDY to MSFC. The Quality factory supervisor would be able to witness all critical operations, inspections and become familiar with specification variances which would enable the supervisor to better plan Quality operation at Denver.

4.10.2 Neutral Bouyancy (N/B) Mockup Unit

A. Receiving - The N/B Mockup Unit was received at MMC Denver from MSFC in November 1969. Quality accomplished a receiving inspection of the item and noted the following discrepancies which affected later build up and delivery:

- Areas of corrosion throughout mockup.
- Pointed ends of wire protruding around circumference of mockup, especially at middle of top assembly where openings had been made for installation of metal pads on the ring frame.
- Longerons in the top and bottom halves of the mock-up were out of alignment.

B. Assembly - The N/B unit was built to sketch engineering. Quality coverage during the build cycle was limited to major assembly level and installation. Records of article configuration and installation were maintained in a N/B Log and accepted at installation by MMC and Air Force Quality. Crab items against the article were entered into the N/B Log and worked off by Manufacturing.

Lack of configuration definition in MSFC contract modification on hardware requirements caused many problems to design engineering, manufacturing and quality. Decisions as to the extent of modification were made by program management and design engineering. MMC program management sent a letter to

MSFC defining the configuration of the N/B unit that MMC would deliver to MSFC unless otherwise notified.

C. Inspection - MMC Crew Systems, Safety, Engineering and Quality personnel made an inspection of the N/B unit to determine the adequacy for use in under water operations. Six major items noted below were found during inspection that required correction: (1) Exposed bolt threads, sharp square corners and edges, thin metal edges, and exposed wire ends. (2) No identification on installed components. (3) Surface of the M512 grid did not fit flush with frame of work platform. (4) Both radial escape openings obstructed. (5) Red escape panel in C&D console area was blocked and should have been painted black. (6) The remaining escape hatch panels were used for attaching a fan and handrail installation which interferred with the capability of the panels being removed for under water activities. Most of the above items were noted by crew systems personnel. The requirements imposed by crew systems such as "no exposed bolt threads" were not reflected in the engineering. The previously mentioned problems could have been eliminated with a proper design review between MMC and MSFC prior to the start of construction. The N/B unit was packed in two separate pallets and crates and sent to MSFC on 9 March 1970. Quality projects and inspection monitored all packing and shipping activities.

D. Discrepancies - The N/B unit arrived at MSFC on 14 March 1970 and MMC Quality Projects made a visual inspection of the shipping crates on 16 March 1970 and found damage to the crate containing the larger upper section of the N/B unit. According to the driver of the truck, the damage was due to wind pressure whipping the face of the crate back and forth and pulling out nails. The driver rigged up a covering and wire lash to keep the face of the crate from damaging the unit. Notice was later received by MMC that considerable damage had occurred during shipment. This was later verified by MSFC Quality who also identified additional discrepancies relative to design and fabrication. An MMC team consisting of Engineering, Manufacturing and Quality, was subsequently sent from Denver to MSFC to correct the problem areas on the N/B unit.

In view of the problems stated above MMC MDA Quality Program Management took the following corrective action:

- Increased coverage in the mockup build area from periodic surveillance to full time.

- Established a new requirement that both design engineering and crew systems personnel participate in the receiving inspection of major items of GFP in mockup and trainer type hardware. This action was taken to identify both design and human factor deficiencies.

- All deficiencies found during receiving inspection (with a recommended fix) were given to MSFC and local AFPRO with a request for approval of recommended actions.

- Unless otherwise defined by contract or released engineering, Quality would inspect mockup/trainer hardware to airborne hardware standards.

- Established a requirement that crew systems perform a walk through and check prior to MMC Quality presenting the item to the customer for DD-250 sign off.

- Establish a requirement that MMC Quality shall witness the receiving inspection, after delivery, of major mockup/trainer items at the point of receipt.

E. Recommendations - In the future, when GFP is to be provided, it is recommended that a MMC team be established to inspect hardware on site and determine exactly what is required for delivery. It is also recommended that prior to the start of any manufacturing, a thorough design review be made between the contractor and the customer, to obtain the customer's concurrence on all design and final configuration.

4.10.3 Zero "G" Trainer

A. Receiving - The Zero "G" Mockup shell was received at MMC Denver from MSFC in November, 1969. A receiving inspection was performed and the following discrepancies were noted:

- Interior and exterior finish was damaged and dirty.

- Two holes had been drilled in the top left side of the dome section (looking forward).

- Half box on top left side of shell (looking forward) had come loose and was hanging by one bolt.

- The following items were called out on the MMC Engineering Tear Out List but were not received with the mockup.

  - 10M16015-1 Box
  - 10M16016-1 Beam
  - 10M16120-1 Box
  - 10M16021-1 Box
  - 10M16022-1 Box

- Minor damage to docking ring mechanisms.

B. Control - Quality established the ground rules for the build up and control of the mockup unit as follows:

- AFPRO notification of receiving inspection discrepancies.

- Class III engineering (sketch) would be used for modification, with red-lines for minor changes.

- Use of log books to control modifications on top assemblies.

- All hardware purchased for the mockup would be designated and identified as Engineering Test Hardware (ETH).

- Detail manufacturing would work to shop folders. The detail and subassembly parts would require shop supervisors' acceptance stamps when completed.

- Quality Project would provide surveillance and buy off of major assemblies.

4.10.4 <u>One "G" Trainer</u>

A. Inspection - Since the One "G" Trainer was non-flight, non-test type hardware, the specifications were flexible. The team concept was used and one Quality Project Representative had the complete responsibility to direct Quality activities. The actual inspection activities were handled by one inspector.

B. Procedures - Sketch type engineering was used throughout the program. If a change was required in the engineering drawing, it was red-lined on the drawing and a copy of the drawing was retained by Quality for the log records. Periodic updates were made to the red-lined drawings and a final update was made at the time of final acceptance of the One "G" Trainer. All receiving inspection took place in the central, One "G" Trainer assembly area. Receiving inspection was the responsibility of the assigned Quality team. Although much of the received hardware was of the non-flight category and designated GFP, it was still recorded into the Property Accountability Records.

If detail parts were to be fabricated by the central shops, a minimum process plan was utilized, with heavy reliance on the drawing for information. These parts were returned to the One "G" Trainer area and inspected by the local team representative.

C. Build Logs - During the course of assembly and installation work, a master build log was prepared and maintained by the assigned Quality personnel. This log described the build history and was delivered with the hardware.

At various intervals during the build cycle, JSC personnel performed hardware reviews. The reviews were instrumental in establishing a sound understanding of the hardware requirements for the high fidelity mockup and led to a smooth final acceptance and delivery.

D. Parts and Materials - A main concern during the assembly cycle of the mockup was the maintenance of a high level of fidelity. The location of various pieces of hardware was critical because of the exact simulation required to meet the flight article requirements. Other items requiring attention due to the Astronaut interface were clearances, sharp edges, corners, legibility of decals/nomenclature, paint and general workmanship. Quality closely monitored critical structural areas where attachments were made for lifting devices and all other hardware which contained mass and had hole attachment tolerance requirements.

In order to conserve material, and acquire hard to obtain items, a review was conducted of all excess material and parts for possible use on the trainer. Material and standard parts changes were made freely, if structural integrity was not a factor, because only fidelity and location were of concern. All changes in material and standard parts were red-lined on the SK drawings.

E. Discrepancy Records - The MARS system was not used on this program because all parts were tightly controlled in one area, they were one of a kind, non-flight, and required no corrective action. Discrepancy records were maintained in the log on items requiring manufacturing rework. Since the trainer was ahead of much of the hardware in the build cycle, it proved to be a good test bed for design and fit check of many pieces of GSE. The designer had the opportunity to see the areas where hardware was to be used (EREP in particular) and make decisions as to space allocations and placement. Changes in the trainer kept pace with the flight article and were made as mockup installations in many instances before formal release of the final engineering. This was possible because the One "G" Trainer designers received all advanced engineering on which they based their planning.

F. Acceptance - The One "G" Trainer received final acceptance after delivery to Houston. After the acceptance of the trainer by NASA, it became GFP and subject to a formal modification program. All modifications performed on the trainer had to agree with the configuration changes taking place on the flight hardware. A formal change incorporation system was established whereby all modifications were installed by formal modification instructions to released engineering. A team of MMC Manufacturing, Engineering and Quality personnel were periodically sent TDY to Houston to incorporate changes into the trainer.

4.10.5 Flight Article MDA

A. Turnover Reviews - Prior to delivery of the MDA to MMC, a joint NASA/MMC Turnover Review was held at MSFC to review the build/test history of the MDA shell. Quality provided an x-ray specialist to review turnover review data with engineering at MSFC (refer to paragraph 4.4). This type of support was worthwhile because differences were resolved and time was saved by not waiting until the article was delivered before asking questions.

Walk through inspections which permitted MMC team members an opportunity to perform a minimal hardware evaluation were performed as part of the Turnover Review. The Quality Project team representative present at the turnover review received first hand knowledge from NASA of what MMC was to be accountable.

The same representative was assigned to the management team to work directly with the MDA during the factory operations.

Much of the data available for review at MSFC was preliminary, and the final reports were a shortage to the ADP. Due to a lack of essential data, it was agreed that MMC activities at Denver, after delivery of the MDA, would be restricted to receiving inspection (including any re-x-ray of welds) until receipt of the following data:

- Alignment Report
- Weight and CG
- As-Built Drawings
- X-ray report
- Nonconformance data (Waivers and Material Review Dispositions)

The team concept proved invaluable during the factory operations because each major department had a representative assigned to the MDA who was able to pursue any open item within his jurisdiction, to their successful conclusion.

B. MDA Receiving Inspection - Receiving Inspection was performed on the MDA in the main factory building while the MDA was in a horizontal position. There were no major discrepancies discovered during receiving inspection. The majority of items written (218) during the receiving inspection were of cosmetic nature (nicks, scratches, gouges, etc.) and were corrected by burnishing and irriditing the area.

After receiving inspection, the MDA was sent to the x-ray building. The MDA shell had radiographic inspections performed while at MSFC, but additional requirements were established by MMC engineering which necessitated the additional operation. During the data review at MSFC, a concern was expressed with regard to two weld images on film X-5011G and X-5044A (refer to paragraph 4.4). The weld areas were re-x-rayed at MMC and proven satisfactory.

C. Planning Operations - There were seven major assembly log books (process plans) used to complete the factory operations. The paint and bake operations utilized separate control point logs. All of the logs were reviewed by the MMC Quality Engineering Planning Department (refer to paragraph 4.10.9) for

completeness and accuracy to engineering requirements. It was the responsibility of MMC Quality planners to highlight special Quality requirements in process plans and to show all mandatory inspections to be performed by both MMC and NASA. After review and acceptance of the process plans by the MMC Quality planners, the plans were submitted to Air Force Quality for review and approval.

D. Inspection - Mandatory inspections created a problem during the build cycle because approvals were required by as many as five different disciplines before the next step of an operation could begin. For example:

(1) The first step in the operation was the location of a part. When manufacturing completed the step, it was stamped into the log. The Engineering PIE then reviewed the manufacturing operation and if the operation was found acceptable, the PIE approved the step. Quality then performed an inspection of the operation and stamped the log step if the step was found acceptable. Air Force Quality then performed their review and also stamped the step if it was acceptable. In some instances, the NASA RMO requested surveillance authority before proceeding. The system required the presence of all parties concerned because the absence of any discipline during the manufacturing cycle could "slow-down" the operation.

(2) The second step in the installation process consisted of hole pattern layout and drilling. The sequence of events relative to approvals prior to performing the actual task was the same as mentioned above. After approval, the holes were drilled for the attachments.

(3) All holes were inspected and gaged by Quality for proper diameter in accordance with the engineering requirements. A complete disassembly of all drilled parts was made whereby each part was deburred and all metal particles were removed from the faying surfaces and holes. In the majority of cases, the removed parts were sent to the paint shop for finishing and were later reassembled into the MDA in the SSB clean room.

Problems were encountered in the early stages of the factory operations with out-of-tolerance hole conditions. A majority of holes were being drilled without the benefit of special tools and drill bushings. The problem was thoroughly studied by Quality and Manufacturing Engineering and remedial action was taken. Due to heavy material thickness and close tolerance requirements, normal drilling methods were not adequate and the following actions were taken:

(1) All drill motors were reinspected for "on-center", tight drill chucks.

(2) Special drills were made with a smaller lead drill on a common shaft.

(3) Individual drill bushing guides were developed.

(4) Prior to drilling through heavy gage material, or many thicknesses, the mechanic practiced on a simulated bench operation.

(5) Only one hole at a time was drilled with inspections performed in a series operation. If problems were discovered, they were solved before attempting additional drilling operations.

The MDA barrel proved to be less than nominal in its true diameter which caused gaps to exist between many of the installations assembled onto the skin surfaces. The gaps were shimmed and the shimming operation was either approved by the Material Review Board (MRB) or changes were made to the engineering drawing.

Out-of-tolerance conditions are not unusual occurrences when working with formed heavy gage material. To compensate for out-of-tolerance conditions a worst case type drawing should be issued which authorizes shims and specifies areas of the structure which are highly stressed and where shimming is not permitted.

In addition to the normal operation of making certain that all installations met the engineering requirements, inspection personnel also verified that all engineering changes had been incorporated (refer to paragraph 4.8). Prior to the release of a process plan, engineering changes were incorporated into the

plan and the changes were accounted for by the planning department. If an operation was in progress and a process plan was issued and changes were made, the inspector then had to account for the changes. The process plan defined the changes to be made and the inspector performed a physical inventory of all parts in question to assure that the necessary changes had been incorporated. The change control system employed on the MDA proved to be very effective.

The inspector was also responsible for maintaining the log records which included writing "crab" items for non-compliance workmanship, accounting for work accomplished to non-released engineering (liaison calls) and maintaining a history of MRB actions.

Interfaces with government inspection personnel were made through MMC floor inspection personnel. A great deal of attention by the inspection department was given to interfaces with government inspection personnel because many of the steps in the process plan required customer buy-off.

After the major penetrations were made in the shell (S190 window, IR Spectrometer, ATM feed-through and AM feed-through), the MDA was x-rayed in selected areas. X-ray was performed in the factory area while the MDA was in the vertical position. X-ray operations utilizing portable equipment was acceptable because it cut down the movement of the MDA to the x-ray facility. Good planning always brings equipment and personnel to an assembly, instead of allowing the assembly when it is a large one of a kind spacecraft to be moved to the equipment.

E. Alignment - A number of MDA hardware items installed by MMC which included experiment support fittings, elements of major substructure, supports, and meteoroid shields depended on a system of reference marks and alignment information to facilitate proper location of the hardware items.

Reference marks were placed on the MDA structure by using MMC optical equipment, which proved to be time consuming because once the marking operation began, all manufacturing operations on the MDA stopped (the MDA was under the control of the personnel performing the alignment).

During alignment set-up, MMC attempted to use alignment scribe marks on the MDA for the Y & Z planes provided by MSFC, but unfortunately more than one scribe mark existed. MSFC had made a single scribe mark on top of blue ink. During the receiving inspection cleaning operation, MMC removed the blue ink and exposed more than one reference alignment mark. The correct marks were established during alignment verification. It is recommended that a permanent or semi-permanent bonded tape be used to mark all critical references. The tape can be removed during later manufacturing operations if desired.

F. Miscellaneous Items - A method should be developed for one of a kind programs such as the MDA whereby a rapid response engineering change system is made available. The change system could utilize a "Quick Change DCN" system with the L/C Sheet as the formal change similar to the system used for the DTA (refer to paragraph 4.10.7). The system used was too slow in response and when many changes were entered into the system, it proved too costly and time consuming to track the unreleased engineering. MMC established a part identification system on the MDA that helped eliminate many changes in engineering drawings. For example, many detail parts drawings for fittings and other sheet metal parts, called for counterbore or pilot holes. Due to the next assembly process, it was advantageous not to have holes in the detail parts. Rather than engineer the holes in the next assembly, the part was accounted for in a process plan and identified as an "M" part. The "M" appeared with the basic engineering part number and meant that an operation was omitted which would be completed at another manufacturing control point. This system was used for many detail parts sent to MSFC because requests were made to eliminate certain operations.

After the release of engineering and at the time of completion of the installation phase of the factory operation, MMC Crew Systems performed a review of the MDA and its major sub-assemblies. The purpose for the review was to check for areas of concern to the astronaut, such as sharp corners, clearances, etc. It was a necessary operation, but in many instances, it was done after the fact. Crew Systems should operate during the design phase and be part of the drawing review and sign-off in order to assure incorporation into the drawings, the consideration of crew interface items such as the elimination of sharp edges, clearances, etc.

G. Moving of MDA - Instances occurred where the MDA, when moved from one factory building to another, would not clear the building. The MDA was then placed on a lower, or shorter low-boy, and the problem was corrected. During the move from the factory to the Leak Test Facility (LTF) the MDA was on a trailer that was too high to be compatible with the LTF work platform. The MDA was returned to the factory and placed on a suitable trailer and returned to LTF.

The following are some of the disciplines found to be necessary for successful MDA moves:

(1) Prior to making a move, all operations must be carefully planned, and approved procedures must be made available prior to the move.

(2) Select "Move Chief" to command and be responsible for the operation. All direction/orders and changes must be issued through the "Move Chief".

(3) Post lookouts at strategic positions to observe clearances, shifting of load and any other unusual conditions.

(4) Hold a pre-move meeting with the "Move Chief" and all associated parties concerned with the hardware. At the meeting, outline to each person on the move team his responsibilities. At the same time, conformation of the training/ certification of personnel according to applicable procedures should be made as well as a check to insure that all loading equipment is properly proof loaded.

(5) When appropriate, perform a trial run of the move with all participants who were responsible for the actual move.

H. Proof Pressure and Leak Check - Proof pressure and leak check tests were performed on the Flight MDA by trained certified crews. The test teams were certified via the MMC Crew Standboard Certification process. Quality personnel were certified and formed a part of the test team. Prior to the actual test start, a pre-validation meeting was conducted and approval to test was obtained from all validation team members.

I. Factory Paint Operations - The MDA was sealed against entry prior to the start of the paint operation. Only authorized personnel were allowed to enter the shell. The factory representative acted as an advisor to the paint team because MDAC-E had completed a similar operation on the AM and MMC needed to benefit from the MDAC-E experiences. Prior to the start of the paint operation, procedures were reviewed with all departments involved. The importance of "tight" process control was emphasized. The entire operation was an unknown and any deviations from the process could have resulted in a need to do a complete repaint operation.

One of the keys to the success of the paint operation was to obtain surfaces clean enough to pass the "Water Break Test" which meant a surface free of all contaminants which could create a non-adherance condition. Quality had to work closely with Manufacturing and Materials Engineering to assure that the MDA was properly cleaned. An irridite operation was performed prior to painting. The irridite operation was a hand operation and required precise control because it was time oriented and had to meet a specific color requirement. After the irridite operations were performed, paint was applied to the MDA. Special paint sample strips were placed throughout the interior of the MDA for use by the Quality Laboratory technician for the final evaluation of the paint operation. The final evaluation was made after the completion of the paint bake operation.

In addition to the paint sample strips in each level of the MDA, extra sample strips were made for the Quality Laboratory. The laboratory technician baked the sample strips in a laboratory oven, and evaluated the samples prior to the MDA bake operation. In the event a poor sample strip was noted, the particular area within the MDA from which the strip was taken was reworked prior to the MDA bake operation. This type of operation was possible because the MDA interior was cleaned, irridited and painted level by level.

The sub-assemblies and details were removed from the MDA and painted separately. Sub-assemblies were processed by the paint shop and received the same controls as the basic MDA shell. An innovation was used to control the sub-assemblies. Rather than use individual process plans for each individual detail and sub-assembly, log books were used. The logs were controlled by paint shop Quality and all the information concerning details were contained in the logs for ready reference.

J. Bake Operations - After acceptance of the factory paint operations, the MDA was sealed against contamination and moved to the bake operation in the hydro-building. The operation was monitored around the clock by Quality because the temperature to which the MDA could be exposed was a controlled operation. There was no significant program impact problems noted during the bake operation.

K. Space Support Building (SSB) Operations - Prior to moving the MDA to SSB, considerable planning was expended in certifying the SSB clean room to meet contract requirements. Final approval of the certification of the clean room was the responsibility of the Quality Laboratory.

Controls were exercised in the clean room regarding hardware as well as personnel. Each person assigned to the SSB clean room received training in clean room disciplines. Quality maintained surveillance over the clean room, the MDA and personnel. If out of control conditions were being approached, management attention was directed toward correcting the conditions.

Selected Quality personnel were assigned to the MDA in the SSB clean room operations. The Quality personnel were skill certified for all installation and tests which were to be performed on the MDA. Additionally, they were certified as part of the test teams for checkout of complex installations such as EREP.

A hatchguard system was used during the entire SSB MDA operation. It proved to be an effective method of establishing personnel disciplines that otherwise could not be maintained.

The MDA installations consisted of the various subassemblies previously removed in the factory and processed through the paint operations (GFP experiments, and other GFP hardware such as radiator panels). In each case as hardware was received in the clean room, Quality performed a receiving inspection. In many cases, it was the first time the article was removed from its clean plastic wrapper. Quality performed a damage check, configuration verification, cleanliness verification and a data package review. In the event data was not available, a report was made to NASA RMO to obtain minimum data. A data folder was started by Quality using information available and the hardware was put into inventory.

Problems were frequently encountered during the SSB MDA operation with regard to data packages and documentation. It was often noted that required documentation and/or data packages were late, incomplete, inaccurate, missing or misunderstood. Hardware was being delivered from various centers and contractors with no set ground rules regarding deliverable data elements for the ADP. In order to define ADP requirements, MSFC issued MPD8040.14 and JSC issued MSCM8010.30.6. These documents were released after hardware was already moving through the delivery cycle. On future programs of this nature, it is advisable to establish a common center type document similar to MPD8040.14 early in the program and impose these requirements on all contractors and centers.

The wire harness development utilizing the three dimensional mockup proved to be a very successful operation. The harness met its initial wring out and subsequent Hughes Analyzer Test with a minimum of wiring errors.

MMC had a number of new materials which caused problems during the installation phase at SSB. The process control for the use of the materials were limited and MMC had to profit by its first time experience. In the future, more study and development must be done by both Quality and Engineering so as to fully understand how to use and control unfamiliar materials such as those noted below:

(1) The ployurethane coating on the interior of the MDA was hard to control and required extensive rework. At SSB and KSC the painters were kept constantly busy making touch-up repairs.

(2) The Fluorel tubing used for covering over harness for flame retardent purposes required a complete reinspection after installation because of suspect surface conditions. Additional research was required to establish proper acceptance criteria and rework techniques.

(3) Mosites - Open cell foam - had a swelling and shrinking problem at certain pressures. When using Mosites, an allowance was not made for changes under various environmental conditions which necessitated a rework in many of the applications of this material.

(4) Velcro - Problems were encountered downstream with identification of the pile and hook. Special checks were initiated to uncover latent defects.

MMC developed procedures to control handling, shipping, receiving, storage and periodic inspections of the S190 experiment window. The procedures received a dry-run prior to use by personnel involved in the move of the window from the supplier to MMC. After receipt of the window, it was kept in a strict environmentally controlled condition and records were maintained by Quality. During and after installation the same strict environmental controls were imposed on the window including an emergency purge provision which could be used when an out-of-tolerance humidity condition was noted.

During installation and test operations, many pieces of hardware both GSE and flight were moved into, around and out of the clean room. The moves required skill on the riggers part because of the criticality of the hardware. It was noted that the most success was achieved by using factory trained rigging personnel to make all the moves. A Hydro Set should be used between the load and the hook when moves are made. The Hydro Set device provides the minute control required during lifting, holding and placement of space hardware and its recording mechanisms provide a ready reference for load values which are not otherwise available.

Quality maintained all documentation in one central area while the MDA was in the SSB clean room. Some of the data entries which required surveillance by the inspection personnel were as follows:

- Time and cycle/storage/shelf life for critical hardware.
- Serialization records of installed hardware.
- Connector mate and de-mate (bent pin log).
- Records of non-flight installed hardware.
- Reporting of configuration changes.
- Records of fit checks performed for both GSE and flight hardware.
- As-run-test procedures.
- Open liaison calls.
- Records of MARS complete and open.
- Records of Quality "crab" items.

Optical surface mapping was not a recognized requirement while the MDA was at MMC but did become a requirement at a point in time during the St. Louis Operations. Optical mapping should be employed prior to delivery of optics after installation into a permanent location and at suitable intervals as determined by the program. Optical surface mapping provides permanent records of any unusual configuration and establishes the point in time where a discrepancy is discovered.

L. Pack & Ship Operation (P&S) - The pack and ship drawing was the controlling document utilized by all departments to plan their operation at time of delivery. The MDA P&S drawing was made available in advance of hardware shipment and planning meetings were held with all responsible departments to review the P&S drawing. In addition to the MDA SSB Quality personnel, MMC used additional trained Quality packaging and shipping personnel during the pack & ship operations. Plans (Certification Logs) were developed from the P&S drawing which were used by Quality to check-off the ship loose, ship separate and ship with items.

Prior to moving the MDA to the airport for loading onto the "Super Guppy", a meeting was held by the "Move Chief" with all the personnel responsible for the move. A trial run was made on the road route to check overhead obstacles and road conditions. At least 48 hours prior to use, all lifting equipment to be used at the airport, including the cargo lift trailer, had been reinspected and proof loaded.

An MMC team was assigned to chaperone the MDA to St. Louis, the team flew on the "Super Guppy" and monitored the instrumentation and made periodic checks of the MDA. Both Air Force Quality and MMC Quality had representatives on this team.

M. MDAC-E Operations - The MDA Flight Article arrived at MDAC-E in December 1971. Upon arrival the MDA was unloaded from the "Super Guppy", transported to MDAC-E, and the MDA and transporter were prepared for entry into the Class 100,000 Clean Room.

Once in the clean room preparations were made for installing the vertical lifting fixtures, removal of the access cover from the aft shipping plate, and entry was made into the MDA to assure that all hardware was intact and that the MDA was ready to go vertical. Exterior damage inspection was completed prior to placing the MDA in the vertical position. No damage was in evidence.

The MDA was installed on a vertical transportation dolly and platforms were installed. Access control was initiated and interior damage inspection and component serialization were completed. The inspections were authorized by inspection plans prepared by the MMC, and the inspection was made jointly by MMC, MDAC-E and the customer.

Because of the two contractor interface concept, it was necessary for MMC to use MDAC-E forms to: authorize and schedule work effort on the MDA at MDAC-E; authorize the documentation of anomalies during Acceptance Testing; and document trouble-shooting instructions that were necessary to determine the cause and effect resolution of an anomaly.

The MMC component MARS was utilized throughout the activity at MDAC-E with copies provided to MMC Denver. The Quality interface between contractors was very good and the MSFC Resident Quality support in conjunction with other NASA Centers, was outstanding.

During hard mate of the MDA/AM several alignment problems were identified i.e., holes not drilled, and purge line interference with wire bundles. All of the problems were considered constraints to demate. ICDs were verified and applicable documents were dispositioned to work the discrepancies.

All work, modifications, tests and discrepancy rework was subjected to strict conformance to applicable procedures, systems, and contract requirements. Mandatory inspection points were identified to MMC by the customer quality organization and incorporated into the procedures and advance planning was furnished for customer quality review when possible.

In October 1972, the AM/MDA was loaded into the "Super Guppy" for delivery to KSC. Associated GSE and data were flown on a C5-A. No problems were encountered during delivery.

N. Summary - The Contractor, Customer interface was satisfactory during MDAC/E operations, once agreements were reached and implementation plans were issued. Most Quality problems were caused by two contractor organizations sharing basically the same facilities and responsibilities and both trying to "Get the Job Done".

On future two-contractor programs, interface operating procedures should be developed and agreed to by all concerned parties prior to starting work. Also, consideration should be given to using common forms (e.g., nonconformance reports, material review reports, etc.) to the maximum extent practical.

4.10.6 Backup MDA

A. Introduction - The MDA Backup Article Program made maximum use of existing Flight Article Documentation, Engineering, Procedures, etc., with updating and revisions as required to reflect Backup Article peculiar requirements. The team concept was used for the Backup program and the same team members who worked the Dynamic Test Article remained in the factory to work on the Backup MDA.

B. Team Assignment - Because of the knowledge of the experienced personnel, many problems encountered on the flight article were not experienced on the Backup Article. Inspection was the same as for the Flight MDA whereby each operation was closely monitored and inspections were performed prior to continuing to the next step of the operation. To prevent duplicating a Flight MDA error, copies of all Flight MDA MARS were made available in the immediate factory area. The MARS were reviewed by the mechanics and inspectors prior to the start of an event to prevent Flight MDA problems from occurring on on the Backup MDA.

Problems with out-of-tolerance holes were greatly reduced. Experience in hole drilling, and the provision of new drills, adaptors and reamers was responsible for the reduction in out-of-tolerance holes.

Motivation which led to good Quality work was a keynote in the operation and a strong program was maintained by:

(1) Presenting a formal Manned Awareness Program to all employees assigned to the Backup MDA.

(2) Providing visible displays in all areas to keep personnel alert.

(3) Counseling by supervisors to keep the employees aware of their role in the program.

(4) Incentives and spot awards. For example: one employee was given an award for his proficiency in drilling/spotfacing 27 "D" holes for the ATM feedthru connectors in the MDA shell, with no errors.

C. Problems - Due to the problems encountered with alignment and position marks on the Flight MDA, MSFC agreed to add additional position markings and measurements to the Backup Article.

MMC Quality and Engineering representatives were present during the alignment tests at MSFC and at a Turnover Review of the MDA Backup Shell at MSFC. At the Turnover Review MMC representatives performed a walk thru inspection and reviewed all the data elements, including x-ray films made by a Quality Laboratory specialist.

Two problems occurred on the Backup Article during the factory operations. The first was due to the MDA upper barrel section being too short by 0.125 inches. The too short condition prevented the radiator panels from fitting properly because the ring had fasteners to which the radiator panels were attached. The phenoloc ring around the entire pressure vessel had to be relocated 0.125 inches forward by using a shim under the ring. The second problem was caused by tooling error which allowed the S190 camera mount fittings to be drilled with a 10 minute arc misalignment between the camera axis and the MDA X axis. The misalignment condition was accepted "as is", but a deviation to the Interface Control Document was required.

D. SSB Operations - Operations in the SSB clean room were conducted utilizing the same procedures and controls exercised on the Flight Article. All Manufacturing and Quality personnel were trained and certified prior to performing tasks requiring certification. Clean room environments were closely monitored and personnel disciplines regarding MDA access were directed by the "Hatchguard System". Problems were encountered with humidity control during the months of April, May and June and in some instances emergency measures such as purging the S190 window had to be taken.

The Backup MDA program utilized the same controls during installation and test as the Flight MDA. One difference was that data delivered with GFP hardware was arriving in a timely manner and was useful for the MDA Backup operations.

E. Test Program - The test program was limited on the Backup MDA because of the unavailability of GFP hardware. The plan was to complete the Backup MDA with all available hardware, perform the required tests, conduct an acceptance review and ship the MDA to MDAC-E. At MDAC-E the missing hardware would be installed and tested.

The Backup Article was also used as a confidence builder for the MDA program and as a general rule, all tests conducted at MDAC-E, except Engineering Test Order (ETO) type tests, were conducted in such a manner as to qualify as acceptance tests.

F. Pack and Ship Operation - The same procedures which were successful for packing, loading and moving the Flight MDA were utilized for the Backup. A Quality representative was assigned to fly with the MDA, on the "Super Guppy". The Quality representative was responsible for monitoring the transportation heaters and performing surveillance on the Backup MDA while in flight and during the ground operations at St. Louis.

G. MDAC-E Operation - A one work package system was established on the Backup MDA. With this system a Mission Preparation Sheet (MPS) was used which authorized all work performed on the Backup MDA. MPSs were also used for receiving inspection of incoming hardware. Accountability problems experienced on the Flight MDA were greatly reduced with the use of the one work package system. Problems did develop, however, because GFP was delivered to MDAC-E for accountability and later turned over to MMC. Documentation problems resulted, particularly with hand carried parts to MDAC-E, which were installed with no verification of part acceptance as flight hardware.

An experienced Quality man was assigned to the Backup MDA to maintain the ADP. The Quality man was trained in Denver and understood the data requirements prior to being assigned to St. Louis.

MMC found that Mod Kit reviews were necessary prior to releasing instructions to the floor. Reviews were held with Engineering, Quality, Test Ops and procedure writers at which time instructions, engineering and hardware were reviewed, errors corrected and tools/equipment for mod work were accounted for.

The Flight MDA made use of a "running recap", similar to what was used in Denver. An improved system which utilized a daily open item status which was fed into and stored in a computer for the Backup MDA status of scheduled work was maintained in a control room.

During periods of "no work", the MDA was sealed against entry. S190 window environmental constraints were controlled by a procedure which utilized an alarm and recording system. A review was made of the temperature/humidity by MMC personnel around-the-clock and personnel who were assigned to the MDAC-E mission support room on 24 hour duty cycles, also were responsible to review the S190 window controls.

4.10.7 Dynamic Test Article (DTA)

A. Task Team - A special task team was assigned as a coordinated group to solve all problems related to the DTA. The team was composed of members from Engineering, Manufacturing, Planning and Quality. A team leader was also assigned, who was the Manufacturing representative. All team members were located in an area adjacent to the DTA in the factory. All MMC contracted installations/modifications to the MDA took place in this area.

B. Engineering Drawings and Plans - Engineering for the DTA was released on sketch-type (SK) drawings utilizing flight engineering design whenever feasible. Changes to DTA SK drawings were made by implementing a "Quick Change DCN" system which utilized the third sheet liaison call answer as a DCN to accomplish all manufacturing work and inspection. A red lined drawing with the liaison call third sheet answer was used for extensive changes and the changes were incorporated into the drawing prior to DTA delivery. The change block on the released drawing showed the liaison call numbers that were incorporated into the drawing. Engineering maintained a Master list of liaison calls, date of drawing incorporation and drawing number (where a change was made). Changes to flight engineering drawings were made on the next higher installation drawing. For example: if a change was required on a detail part for DTA usage and the part number was a flight number, rather than issue a special one time usage DCN, the change to the detail was shown on the installation SK drawing. Manufacturing and Engineering prepared a DTA drawing control point chart which was utilized as a parts and assembly check list.

Quality approved the Manufacturing Process Plans for details, sub-assemblies, assemblies and installations for the DTA. Wherever possible existing process plans were used including the basic seven major control point installation logs which were changed to reflect DTA configuration differences.

C. Normal inspection ground rules and procedures were applied with the following exceptions:

(1) Mass simulators required no detail inspections. The engineering drawings reflected this requirement and affected thirty-nine assemblies.

(2) Seven major factory log books contained the process plans and inspection buy off points for each installation. MMC made arrangements with Air Force Quality to limit their inspections on these installations. For example, on the Flight MDA, Air Force performed mandatory inspections for every installation operation which included the following checks:

- Parts location check.
- Hole pattern layout.
- Hole drilling (condition & tolerance).
- Part deburring.
- Reassembly and attaching hardware check.
- Torque check.

(3) Before Flight, DTA, or Backup hardware was scrapped, a team consisting of Quality, Engineering and Manufacturing reviewed the material for limited usage on the DTA.

(4) Data from hardware which had been dispositioned "Use As Is" for DTA by MRB (item 3) was entered into an open MARS that was designated as a Master MARS. Subsequent entries were added via MARS Supplemental Data Sheet as necessary. All

items in this category were identified for "Test Usage". The Master MARS was controlled by the MDA Quality supervisors in the factory and SSB where various subassemblies were manufactured for the DTA. This Master MARS system, eliminated the generation of many individual MARS.

(5) All on-board equipment installed by MSFC which was received as GFP was not reverified as to location.

Other differences from the Flight and Backup noted on the DTA engineering drawings were:

- Internal painting of the DTA was not required.
- Parts requiring painting for corrosion protection were painted with a commercial type paint.
- Flight article details used for the DTA which were previously painted were acceptable as is.
- Final internal and external cleaning was required but limited to general type cleaning (i.e., vacuum and wipe down).

D. Controls - Discrepancies noted on GFP were handled the same as they were for the Flight unit. The GFP MARS were approved by MMC Quality, Engineering, and the local MSFC Quality Representative except in those instances where the specific approval of the Contracting Officer was required for the rework/modification of defective GFP.

A stocking and staging area was set up adjacent to the DTA assembly area in the factory. With this arrangement Quality was able to effectively control the test usage hardware assigned to the DTA.

Manufacturing, in conjunction with Planning, prepared a flow plan which tracked the need dates for details and procurement against subassemblies and installations to assist team representatives with planning activities and department manpower direction.

E. Pack and Ship Operation - Careful attention was also paid to the many details involved in the packaging and shipment of the DTA to the airport as was done on the Flight Article. The assigned "Move Chief" coordinated the operations and personally followed the entire operation from loading the "Super Guppy" in Denver to unloading at Houston. The "Move Chief" also assisted NASA in the move from the Houston airport to the test facility.

MMC task team representatives (from Quality, Engineering, Manufacturing) received the DTA along with NASA at Houston. During receiving inspection all items were accounted for and were received in good condition with no shortages. The task team members later assisted NASA in the installation of loose hardware and acted in an advisory capacity during the mating operation with the AM.

MMC was requested by NASA Test Engineering, Houston, to apply slippage marks (torque stripes) to all the internal fasteners. This was required for visual inspections, after vibration tests, to determine if any of the fasteners had changed position. Future test programs should utilize slippage marks and the requirement should be placed into the engineering drawing.

F. Conclusion - The DTA was an example of a well coordinated program which achieved success through the cooperation of all team members who did their share to make the program go. In addition, it should be noted that the willingness to change and make changes but still control the entire operation added greatly to the success of the unique DTA program.

4.10.8 GSE

A. Introduction - The GSE provided by MMC for the MDA was divided into two categories. The first was mechanical GSE which consisted of lifting devices and handling/moving equipment. The second category was test equipment, consisting of breakout boxes and test sets.

B. Engineering Designs - Engineering designs for the build of mechanical GSE was released as Sketch (SK) type engineering. Since this was deliverable GSE, MMC controlled the operation with process plans for detail parts and log books for the major assemblies. The Quality Planning Department reviewed all process

plans and log books. Inspection points were established and required quality provisions were included in the processes and logs during the planning review.

One design requirement for ground handling GSE was to have all removable pins and bolts either attached with lanyards or serialized and identified as to location. The reason for the requirement was noted at the Spacecraft Acceptance Review held at MDAC-E. KSC required identification and serialization of all loose hardware as to location at the time of proof loading. If loose pins or bolts were not attached with lanyards or serialized, there was concern that substitute pins or bolts could inadvertently be made or that pins/bolts could be placed in another part of the lifting device that received a different load during test.

The SK drawing system did not accomplish one objective which was to cut down on changes and rapidly move details through the Manufacturing/Inspection cycle. Whenever a change was required in a detail part and a liaison call was written, Engineering was reluctant to release a DCN for the change. Engineering felt that red-lined SK drawings were sufficient along with an updated drawing prior to delivery. Unfortunately, the Quality system would not permit passing detail parts from one control point to another for additional processing because the original folders could not be closed out with unreleased engineering. There is no method established to track details through the manufacturing cycle once they have been released on green engineering. The answer to the problem would be to utilize a "Quick Change DCN" system similar to the one described in paragraph 4.10.7.

C. Inspection - Inspections were performed on mechanical GSE starting with fabrication of details and continuing throughout the assembly process. The manufacturing assembly process consisted of precision drilling operations, machining operations, welding and proof-loading. Manufacturing operations were inspected by MMC and Air Force Quality and mandatory inspection points were established for the Air Force with final acceptance via a DD-250.

In order to be certain that the GSE would satisfy its intended design and use requirements, a series of fit checks were established. Fit checks were planned into the build and test cycle of the MDA and were performed at the earliest possible time. A Matrix was prepared by Engineering which

showed the location where fit checks were to be performed. The three locations where fit checks were performed were Denver, St. Louis and KSC. Quality witnessed the fit checks and documented the results on the Matrix and in the ADP.

D. Test Equipment - Test equipment GSE was originally manufactured as tooling using a Tool Design (TD) drawing. Test equipment was inspected by Quality, but the level of inspection for workmanship was not the same as required for deliverable equipment. Planning for test tooling was also at a lower level with minimum documentation. For example: all components were procured through the test tooling department and were not inspected upon receipt. Quality permanently identified these components "test usage" and they were used for test equipment build. A decision was made to use SK type engineering for acceptance of the test equipment GSE. Test tooling originally built was converted from TD to SK. Problems were encountered with the conversion because additional data and reinspection were required. Contract coverage was requested and granted for "Test Usage" components. Rather than make the conversion it would have been more effective to use TD engineering and have the contract specify the differences in acceptance requirements.

Selected items of test equipment were assigned to the Engineering Laboratory for build, test and delivery. The Data Quick Look Station (DQLS) was one of these items. Test equipment provided by the Engineering Laboratory was also built to SK drawings. Quality was assigned planning and inspection responsibilities for the test equipment and provided personnel for the laboratory. A system of inspection points was established during the build cycle and inspection point information was contained in log books. Air Force inspection was provided in a sequence that led to a final acceptance via DD-250. The pieces of test equipment, unlike those manufactured originally as factory tools, had a planned quality program for deliverable hardware.

Calibration of test equipment was part of the acceptance cycle and was verified by Quality prior to delivery. Due to the uniqueness of some of the test equipment, special environmental precautions were taken such as the use of air ride vans for over-the-road-shipments.

E. Delivery - If GSE was to be used within a clean room, the GSE was cleaned to required specification levels, sealed and identified to show compliance with cleanliness requirements.

After delivery of GSE, changes were made through the formal modification program and records were processed through the configuration control loop. MMC Quality performed inspections for periodic maintenance, calibration and modifications at field sites on GSE. Each piece of GSE had its own ADP. The ADPs traveled with the GSE to the field sites and were maintained by Quality to show the complete history for the GSE.

4.10.9 Quality Procedure for Review of Manufacturing Process Plans (MPPs)

Process plans for fabrication were initiated at detail, sub-assembly and assembly levels by Manufacturing Engineering. They were initiated using the following as authority.

- New engineering
- DCN release
- Liaison calls
- Directive, program assignments
- MARS
- Test procedures

As these plans were released by Manufacturing Engineering they were presented to Quality Engineering with the applicable authorization attached. Quality Engineering reviewed the plans to the requirements of Quality Procedures and check lists and inserted the Quality inspection check points. Where Manufacturing Processes were called out, Quality reviewed the Process for Quality Inspection points and inserted them where required (i.e., hole sizes, surface preparation, thread check, etc.).

If the Process Plan was on the Air Force Quality Assurance (AFQA) mandatory inspection list by Control Point, it was presented to AFQA for the insertion of their mandatory points. Quality Engineering and AFQA stamped the Process Plan approval block and the plan was sent back to Manufacturing for reproduction and release to the floor.

If the MPP did not require AFQA approval, Quality Engineering would return it to Manufacturing for reproduction and release to the floor.

4.11 SUBSYSTEM/SYSTEM/INTEGRATION TEST

4.11.1 Training and Certification

A. Introduction - The technical complexity and relatively short duration of the MMC Skylab Program precluded reliance on the "Normal Training and Learning Curve" to prepare personnel for the manufacture, installation, test and launch program goals. Consequently, an intensive training and certification program was implemented to assure the required qualifications.

To implement the Skylab Training and Certification Programs, plans were established to insure that personnel required for engineering, manufacturing, handling, errecting, inspection, test, maintenance, launch and post launch operations were adequately trained and certified. Plans formulated were based on MMC Standard Procedures and MMC Personnel Certification Plan M-64-69.

B. Responsibilities - Responsibility and control of the Training and Certification programs was vested in the Central Standardization Board, with the MMC Director of Quality as Chairman. The Certification Board was comprised of representatives from each of the functions/organizations shown in Figure 4.11.1-1. Specific responsibilities of the Board included:

- Establishment of minimum certification requirements and approval of the Certification Requirements Summary Charts (CRSCs).
- Reviewing of personal records and conducting personal interviews to evaluate individual knowledge, safety awareness, security consciousness, general attitude, and Manned Flight Awareness.
- Certification of individual/crews that met all requirements identified on the Certification Requirements Summary Charts.
- Documentation of all activities and actions pertaining to the Certification Program.
- Submission of data on individual/crew status in accordance with annex "F" of MMC M-64-69 to the Denver Training and Certification Organization for incorporation into the Master Certification Status Report.

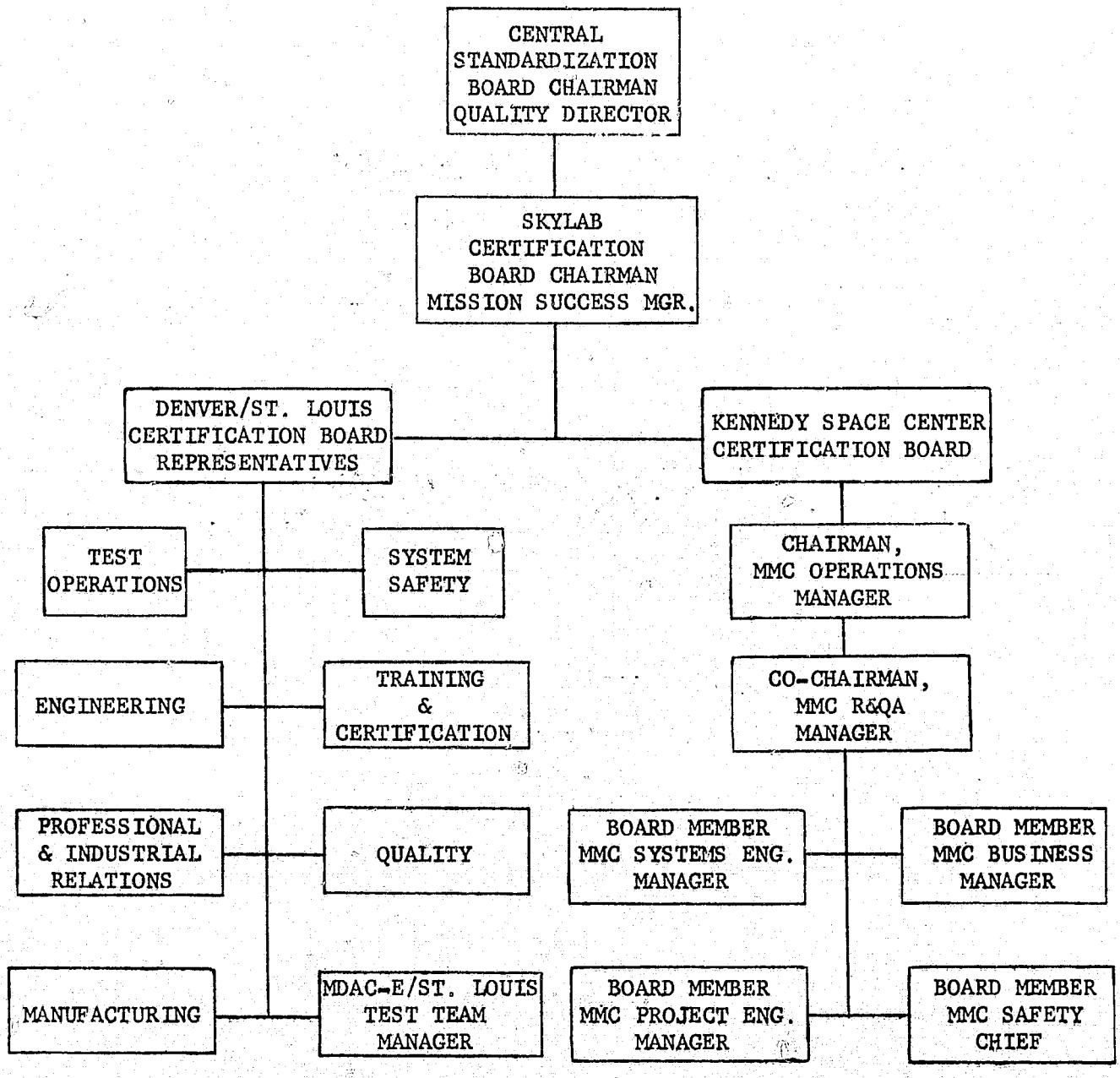

Figure 4.11.1-1 Skylab Standardization/Certification Board

Responsibilities of the individuals participating as members on the Certification Boards were as follows:

(1) Systems Safety, Manufacturing, Quality, Test/ Operations, and Engineering.

- Identify employee skills and technical training/ certification requirements.
- Report in writing to the Certification Board Chairman any conduct or performance by certified personnel which may influence status of certification.
- Furnish technical experts in required areas for Certification and Standard demonstrations.

(2) Training and Certification (Denver Division)

- Serve as lead organization in development and standardization of the Certification Requirements Summary Charts. Coordinate such development and employee skills training and certification with other members of the Certification Board.
- Research, prepare and present familiarization, motivational and technical courses as required in accordance with the Certification Summary Charts.
- Assist in the planning, scheduling, and directing Certification Demonstrations/Examinations.
- Maintain all records for the Certification Board.
- Maintain and distribute the Master Certification Status Report to applicable supervision reflecting the accomplished training and certification of personnel in accordance with the Certification Requirements Summary Charts.

C. Field Training and Certification - Due to the various phases and locations of the MMC Skylab installation, test, and operation activities, an overall field personnel certification plan was formulated by MMC/Denver Training Division. The provisions of this plan applied to the various locations and activities as follows:

- MSFC, JSC, KSC/ATM Test and Support Operations.
- JSC Medical Support Team Operations.
- MDA Test Team Activities at MDAC-E.
- Experiment Test Support at MDAC-W.
- KSC Test and Launch Support Operations.

To accomplish the training and certification at the various locations, Field Certification Committees were established to be responsible for on-site certification activity subject to audit and approval of the Skylab Certification Board. These committees functioned as an extension of the Skylab Certification Board.

The authority and responsibility of the Field Certification Committee included:

- Identification of certifiable positions and submittal with supporting rationale to the Skylab Certification Board for approval.

- Development of Field Certification Requirements Summary Charts (FCRSCs) and submittal to the Skylab Certification Board for approval. The FCRSCs included NASA Certification requirements where applicable.

- Coordination and implementation of necessary classroom and/or experience training to satisfy certification requirements.

- Development and/or coordination of certification examinations and subsequent administration and evaluation. Submittal of examination scores to the Skylab Certification Board.

- Identification of recertification requirements and submittal to the Skylab Certification Board.

- Application to the Skylab Certification Board for certification waivers.

- On-site maintenance of individual/team certification records as required.

- Provide representation to NASA certification committees as required.

The Skylab training prerequisites to field certification were identified on the FCRSCs. The Field Certification Committees/ Representatives insured the implementation and coordination of training to satisfy these requirements. In general training was provided as follows:

- A scheduled formal training course and certification examination.
- An accelerated training course including certification, examination or demonstration.
- A self-study course and certification examination or demonstration.

Field Certification Cards were issued by Skylab Training to each individual who satisfactorily completed those requirements specified by his position on the applicable FCRSC. Skylab Training did not issue the cards, however, until signature of the Skylab Certification Board Chairman was obtained. Supervisors in each area were responsible to assure that personnel possessed the appropriate field certification cards prior to assignment.

Where extenuating circumstances warranted, individual waivers were considered by the Skylab Certification Board if any of the following conditions were met:

- Personnel background/experience was comparable to FCRSC requirements.
- Similar training had been completed.
- Previous certification in another company division or program.

In no case were waivers granted where human reliability requirements were involved.

D. Training Courses - Training courses were separated into two categories, Systems Training and Specialized Training. Courses were classified as Orientation, Familiarization, Operation, Mechanization, or Specialization. Courses which required certification were identified by including the statement "This is a Certification Course" underlined in the body of the course description. Certification requirements were applied to those tasks or operations considered critical or potentially hazardous.

The following defines the classification of the courses:

(1) Orientation Courses - Designed to give a general approach to a series of related subjects. Primarily designed for managers and non-technical personnel for planning purposes.

(2) Familiarization Courses - Designed to give necessary knowledge to participate or provide reference observation in a test operation. Normally provided for Systems and Project Engineers requiring knowledge of a System or Subsystem.

(3) Operational Courses - Designed to give the necessary knowledge to participate in a test operation. Systems Engineers or Technicians requiring an intimate knowledge of such a system or subsystem participated in such courses.

(4) Mechanization Courses - Designed to give intimate knowledge of a particular System or Subsystem. Courses were detailed to the point at which an individual could identify problem areas at the component level. System Engineers and Technicians participated in such courses.

(5) Specialized Courses - Designed to cover the techniques, specifications, and procedures for any task, process, or operation which was determined to require certified personnel for accomplishment. A rigidly constructed examination process was applied to all courses in this category.

E. Certification Status - Quality Management, Engineering, Technician, and Inspection personnel were required to be certified dependent upon job classification and requirements of CRSCs. Quality personnel at each location accomplished unscheduled audits of personnel in various work areas and tasks to verify that personnel involved were certified. These checks were accomplished against the Computerized Certification Status Report published by MMC Denver Training and Certification.

The Certification Status Report provided a summary record of individual, crew, and skills certification activities. The report was broken down into three major tab runs:

(1) "Master Control" - This tab run consisted of a listing of company employees training and current certifications arranged in badge number order.

(2) "Work Center" - This tab run provided groupings of the training and certifications of each Certification Board plus groupings of the skill certifications for Denver, St. Louis, and KSC. Data relative to each function on the Certification Requirements Summary Charts was grouped to include the requirements for each certification, the type of certification, and the personnel awarded the certification. Also data was grouped to reflect training accomplishments of each individual relative to each Certification Board.

(3) "Control Point" - This tab run was identical to that of the "Master Control" tab run but was grouped numerically by department.

Individuals who received copies of the Computerized Certification Status Reports were responsible for updating the data displayed on the tab run. Corrections were made on the then current copy in red pencil. Upon receipt of new tab run, the red lined copies were forwarded to Denver Training and Certification for incorporation into the computer.

In addition to the audits accomplished by the local Quality Departments at each location, separate audits were accomplished by MMC Quality Audit Department. Findings of such audits showed no major discrepancies in the Training and Certification Programs.

4.11.2 Denver & MDAC-E

Test teams were established which consisted of a test conductor, test technicians, a Quality engineer and an inspector. Prior to the performance of any system tests on the MDA, involved personnel were required to be trained and certified as defined in paragraph 4.11.1. Standboard certifications were required on major system tests and in many instances on subsystem tests because of the test complexity.

The "Official Test Copy" of the test procedures were in the possession of the assigned Quality representative during every phase of the test cycle. In some instances more than one Quality representative was involved. Due to the proximity of the test equipment to the actual hardware, it was often necessary

to place one inspector with the test conductor and another inspector with the test equipment. As entries were required in procedures, actual recorded values from the test equipment verification were obtained from the two inspectors and entered into the procedures, stamped and dated. Questions which arose concerning procedures or tests were the responsibility of the assigned Quality engineer who assisted the inspectors in making decisions as to the technical adequacy of the tests.

When errors were noted in the procedure, deviations were written to correct the errors/differences. All deviations were approved by the Quality engineer. If the error/difference was of such a nature that it affected the Systems Test and Checkout Requirements Document (STACR), (refer to paragraph 7.1.2.2 for STACR definition) a Liaison Call was initiated. The STACR was then changed via a formal change route or a permanent contract deviation was obtained which allowed acceptance of the test results.

The MMC practice of conducting pre-test and post-test meetings was universally used on the MDA. Prior to a pre-test meeting, Quality prepared a "Certificate of Readiness to Test" (CORT) which listed all the test constraints noted in the historical data. At the pre-test meeting the Quality engineer reviewed the CORT and test constraints. Each constraint was reviewed for its affect on the test and actions were assigned to work off any constraint if necessary. The review proved to be beneficial to the test team members because all potential problems were discussed and many areas of concern were eliminated that otherwise would slow down the test. At post-test meetings it was possible to determine whether test objectives were met and all open paper work was completed at one time with customer representatives.

The as-run test procedures were maintained by Quality as historical data. Prior to placing the completed procedure in the data file, the Quality engineer used the as-run test procedures to update the STACR compliance matrix. The STACR identified minimum parameters and functions that must be verified by tests performed on the MDA. A STACR compliance matrix (refer to paragraph 7.1.4) was developed and stamped by Quality and the customer for each acceptance test element which was complied with. Areas of non-compliance were noted and required contractual coverage or changes to the STACR were required before the test was accepted.

Many of the tests performed on the Backup MDA at MDAC-E were non-acceptance tests performed by an Engineering Test Order (ETO). If ETO tests were performed on the MDA Backup system in lieu of the acceptance tests, they were also documented on the matrix. These tests were signed off on the matrix by Engineering when only an engineering evaluation was performed and stamped by Quality when test results were witnessed and recorded.

It would have been an advantage to train personnel in the use of the different procedures and forms they would eventually be using when working at another contractor's facility or NASA center. It must be remembered, however, that the equipment user was the one to satisfy and that the equipment users' methods may be better than the methods brought to the new facility by MMC. A vanguard of key personnel should be sent to the new facility so that they can report back to MMC on the changes that must be made with regard to operational procedures.

4.11.3 KSC Operations

A. KSC Interface - The MDA arrived at KSC in October, 1972 and receiving inspection was initiated. It became evident early in the inspection that the hardware and procedure were not compatible. Numerous deviations were made to correct incompatibilities, i.e., connector part numbers, mated/not mated, panels installed/not installed, and nomenclature errors. Additional problems were encountered in obtaining support equipment such as work platforms and stands. Due to the configuration of the High Bay Test Cell in the Operations and Checkout (O&C) Building, it was necessary to design, fabricate, and assemble work platforms and stands to permit access to the total exterior of the MDA. Because of the Operations schedule, Quality was unable to obtain a turnover of the MDA for inspection; therefore, the Receiving Inspection procedure was not closed out for approximately three months.

Since no time was allocated or authorized to familiarize personnel transferred with the MDA with the KSC system, problems arose with regard to Discrepancy Reports (DRs), Test Preparation Sheets (TPSs), Minor Discrepancy Reporting System Squawks (DRSSs), Parts Installation and Removal Record System (PIRRs), Temporary Installation Record (TIR), Parts Tags, and Red Streamer Accountability-Inventory.

Difficulties were encountered with interfacing contractor personnel mating and demating MDA electrical connectors. MMC had a requirement to log all mating/demating of electrical components. The problems involved personnel working to authorizing documentation such as TCPs without coordinating their activities. The problem was resolved through contractor Quality personnel notification of pending connector activities.

B. KSC Test Team - During the activities in the WITS, the operation was centralized around Logistics, Engineering, Planning, Operations and Quality. Centralization allowed the organizations to respond to problems with minimal delay.

During initial Vertical Assembly Building (VAB) activities, the centralization of support organizations created some delays in providing immediate services to the operation. The delays were due in part to the distance between the O&C Building and the VAB, availability of transportation, and the readjustment of personnel. As VAB activities continued, the centralization of Logistics, Planning, Operations, Engineering and Quality was accomplished. Support equipment, tools, hardware, clothing, records, Material Review Board, flight crew equipment, and bonded storage were readily available. Withhold areas were identified for control of discrepant hardware which eliminated some travel.

C. Test Procedures - TCPs were originated to control and dictate how and when the MDA would be tested at KSC. A number of problems arose when the schedule dictated that the TCP must be ready for test performance and be released for publication 45 days prior to the need date.

Late information from other contractors caused the TCP to be written with obsolete data which necessitated a rewrite prior to testing. The rewrite was made via a Procedure Change Notice (PCN), or a Deviation. Quality Engineering was required to concur with the PCNs prior to release for publication. If Deviations were written to the TCP, no Quality review was required which caused Quality to review after the fact and which caused some retest because test requirements were not met.

TPSs were utilized to detail the control of functional tests, hardware movement, and configuration changes when not controlled by TCP and DRs. When the MDA first arrived at KSC, MMC Quality reviewed and approved the TPS for Quality Control, Limited Operational Life Items Control, and operational handling of

components. Subsequently, Quality was not in the review and approval cycle of TPSs to insure that requirements were met. This required that Quality review all as-run TPSs for control and tracking of hardware history and to assure that the operation set forth in the TPS did not violate hardware integrity.

D. Corrective Action - Quality Assurance reported hardware or software discrepancies on KSC DRs and DRSSs. An Interim Discrepancy Record System (IDR) was used to identify and document problems that occurred during test and to authorize trouble-shooting. The discrepancy would be investigated and dispositioned accordingly by Engineering. The Quality Engineering (QE) Department reviewed and listed each discrepancy on a sheet which was printed and sorted into equipment categories per KSC procedures covering Use and Control of Test and Inspection Records (TAIR) Books. The tab list was kept up-to-date to allow tracking of the DR until closure. Unsatisfactory Condition Reports (UCR), Failure Analysis Investigation Reports (FAIR), or Corrective Action Problem Summaries (CAPS) were tracked for status.

MMC QE created problem folders and all pertinent data and correspondence were inserted into the folders. All problems were coordinated with the MMC (Denver) Corrective Action Control Center (CACC). The MMC CACC was utilized for corrective action and closure of problems. MMC QE reviewed all closure actions and obtained NASA QE concurrence on the disposition or corrective action.

The DR was also used for the handling and disposition of Nonconforming Material. MMC QE was charged with the responsibility to chair the Material Review Board (MRB) and to review non-conformances, disposition material, determine if Failure Analysis (FA) and diagnostic testing or inspection was required and determine if a failure had occurred which could cause a system, subsystem, or component to not perform properly. One MMC QE, one MMC Systems Engineer, and one NASA QE comprised the MRB.

E. Summary - The NASA/KSC Quality system, procedures, and forms, once personnel became indoctrinated, was found to be very efficient. The dual use of one form such as the IDR/DR for trouble-shooting and the use of TPS for modifications or normal work is advantageous.

TCPs at KSC used in the integration testing were too large and cumbersome to use and control. More pages of TCP Deviations were written in some cases than the original TCP contained.

There was no review by Quality of Deviations entered into the procedures and often PCNs were not written until too late. TCP Deviations should have been reviewed by QE for compliance with the Program Test and Checkout Procedures Standards Policy the same as the TCP.

TPSs used at KSC were a useful tool for control of work or movement of hardware. QE did not review the TPS until after it was worked. Problems could have been eliminated before they happened if QE had a review and concurrence role in the preparation of TPSs.

The IDR was a difficult document to track. When IDRs were 100 pages long and had been in circulation for several weeks, it was difficult to track the IDR for corrective action. The incompatibility of procedures and hardware which caused most IDRs could have been eliminated by having personnel reviewing advance copies of the documents against the actual hardware at the hardware location.

Sufficient time should be allocated to the Quality organization for turnover of hardware for inspection shakedown activities. Normally, MDA Receiving Inspection would take eight to twelve hours for completion. The provision of adequate time schedules, regardless of the activity, would assure professional results.

Time should be authorized and allocated for familiarization of personnel when assignments involve two completely different Quality systems. Personnel that were assigned to the St. Louis Operations moved with the MDA to KSC a completely new method of operation.

Provide familiarization training prior to transferring personnel to locations using different systems/procedures.

Consider establishing the requirement at the start of a program to utilize the same systems/procedures and forms (i.e., TCPs, DRs, TPSs, etc.) throughout at all locations.

4.12 HARDWARE REVIEW

4.12.1 Quality Hardware Review

A. Purpose - The purpose of the Quality Hardware Review, as performed by Skylab Mission Success, was to provide an independent review and analysis of critical hardware as regarding

its "flight" readiness. The scope of the review and analysis included all historical entries and test data recorded during assembly and test of the hardware.

B. Scope - The Skylab Quality Hardware Review concept was one in which the manufacturing and test history of critical hardware and systems were regularly reviewed and certified as a requirement of hardware readiness.

The technique used was to collect and collate in a historical manner the documentation which was generated by the various disciplines such as Manufacturing, Test, Supplier Quality, etc. These documents were then assessed for completeness and accuracy, and summarized in narrative format. The backup detail, the narrative summary, and a certification sheet were made into a package. These packages become part of the hardware permanent record.

By maintaining these data packages as official records, a valuable source of information was readily available for confirmation of compliance to requirements or as research material for development purposes.

In summary, the Hardware Review activity, by collecting, collating, and certifying, took the additional step to provide the program with positive factual hardware documentation from which readiness and mission confidence could be assessed.

C. Procedure - Skylab Mission Success, in conjunction with Product Integrity Engineers (PIEs), insured that components requiring Pedigree were identified in the applicable Program Critical and Limited Life Component Drawings (CLLCD), 82051000010 and 84000096100.

Systems requiring Incremental Summary Review documentation were defined by the Program and/or identified in the implementing Program CLLCD.

PIEs authorized to participate in and approve Hardware Reviews were identified by applicable Program Directives.

D. Definitions -

- Pedigree - Special reviews conducted at the component and/or device level to insure flight worthiness of the as-built hardware and spares.

- Incremental Summary Review (ISR) - The review of all build/test data pertinent to an item at or above system level in increments at selected milestones to determine that item's acceptability for its intended purpose.

- Traceability - Serialized components appearing in the CLLCD which require identification and historical summary for the purpose of Hardware Review either at its level or next assembly level within the incremental summary review.

E. Component Certification (Pedigree) - Upon notification and receipt of the data package for an item requiring Pedigree, a Hardware Review engineer performed a review of the data. Reviews were conducted on each serial number of every item on the CLLCD. The review included the following as applicable:

- Vendor acceptance test records.
- MMC Logs and acceptance test records.
- All MARS against the item.
- Any Failure Analysis performed.
- Any Engineering Analysis performed.
- Any DC&Rs applicable against the item.
- Any other available or pertinent information.

When the item was found acceptable, the Data Certification Sheet was signed by the Hardware Review engineer. This constituted Pedigree of the item, and allowed it to be released into the production system or inventory. For the first article of a dash number, a joint review was made with the Engineering PIE, and his signature also appeared on the Data Certification Sheet.

For ship direct items requiring Pedigree, data was received from Procurement Quality, the review performed, and written notification of the item's acceptability provided to the agency having the hardware. No hardware was released to the Flight Inventory until satisfactory Pedigree had been accomplished.

If required, the responsible Hardware Review engineer initiated a Component Summary against each serial number, summarizing that item's history. It included, as applicable:

- Nomenclature,
- Manufacturer,
- Part Number,
- Dash Number,
- Serial Number,
- Maximum allowable operating time or cycles,
- Maximum allowable vibration time,
- Cumulative operating time and/or vibration time,
- Date of build,
- The drawing and ATP revision applicable,
- Traceable components installed in the item,
- Applicable history, including MARS, FAs, DC&Rs or other pertinent data.

F. Component Recertification - Whenever a component was modified or rejected by Component MARS, the Component Pedigree was voided. A review was conducted to verify satisfactory resolution of the problem, the Component Summary updated to include the pertinent information, and the item re-Pedigreed on a Data Certification Sheet.

To support re-Pedigree, Skylab Mission Success received or obtained a copy of the MARS (or computerized output suitable to support re-Pedigree), DC&R reports and closure data, Failure Analysis reports and Stress Analysis from appropriate organizations.

G. Incremental Summary Reviews - In order to reduce the magnitude of the final acceptance review for the MDA, ISRs were scheduled at major milestones during the fabrication and test cycle. These ISRs were conducted by MMC and NASA and mutual agreement was reached that the work covered by the ISR had been satisfactorily completed. As a result, the final MDA acceptance review had to deal with only the work since the last ISR.

- ISR No. 1 - This ISR was held at the completion of Factory operations prior to transfer to SSB.

- ISR No. 2 - This ISR was held at the completion of all external structural and electrical installations/modifications prior to the installation of super-insulation and meteroid shields.

- Informal ISRs were held prior to the start of systems testing for the purpose of sign off of Certificates of Readiness to Test (CORTs).

4.12.2 MDA Acceptance Data Package (ADP) Requirements

A. MDA ADP Background - MMC experience in the aerospace industry provided the knowledge of what a standard ADP should consist of. Using that experience as baseline, an attempt was made very early in the program to determine how that baseline should be changed to satisfy the NASA program needs for Skylab. Negotiations with MSFC Skylab (SL) Quality representatives and KSC Quality representatives resulted in little change to that baseline. The then final, agreed to, ADP was incorporated to the contract. However, as time progressed, a multitude of last minute ADP changes in the form of additional requirements were identified by KSC. This action more or less negated all previous negotiations. It is believed the final version of the ADP could have been identified in very early stages of the program.

B. Government Furnished Property (GFP) ADP - Most GFP hardware delivered to MMC for use on or with the MDA failed to meet minimum requirements of the original baseline ADP. Property in many cases was unserviceable as a result of no data delivered with the hardware. MMC developed the GFP ADP data matrix and published it to bring to light the deficiencies and to provide a tool to the NASA Program Office to obtain the required data from suppliers. As the program progressed, the MDA stowage hardware was added to the matrix. The GFP ADP matrix was not closed out until COFW Endorsement #5 pre-FRR at KSC. The final close out was accomplished by NASA waiver of unsupplied GFP data.

C. MPD 8040.14 MSFC SL Program ADP - During the MDA acceptance review at MMC Denver facility December 1971, NASA KSC made known several additional ADP elements of data both in flight hardware and GSE. A Review Item Discrepancy (RID) resulted in a joint team effort consisting of representatives from MSFC, KSC and MMC Program Office making a "final" determination of the ADP requirements for the total SL program. The result of this effort was MPD 8040.14 dated 1 February 1972, which was published as a guide line document for ADPs furnished by suppliers of SL hardware and imposed the same requirements on GFP hardware. This document had little effect on MMC since most of the required elements were supplied and the remainder was available. The area of greatest impact was in the MMC furnished GSE. Formal ADPs were not originally planned for this type hardware. As a result of the impact, MMC SL Quality Project negotiated directly with NASA/KSC Quality and reached agreement

on the GSE ADP format. It became necessary to build formal GSE ADPs during the time frame that the MDA was at St. Louis and prior to delivery of the GSE to KSC.

After all SL hardware suppliers had an opportunity to impact the guide lines document, MPD 8040.14A was issued as a requirements document July 10, 1972 and put on the MDA contract. The GFP ADP matrix was aligned accordingly.

D. ADP in Mission Support - MMC Quality Project recognized the need to have the Flight MDA ADP at Denver during the Mission Support time frame of the SL program and began negotiations with the MSFC Program Office for custodial responsibility of the ADP immediately after launch.

The ADP was delivered to MMC Denver in July 1973. Subsequent to final splash the MDA ADP will be delivered to MSFC archives.

E. Summary - The lesson learned in this piece of the whole, is that an ADP baseline has to be established prior to the start of hardware delivery. A problem inherent to a program like Skylab is that requirements such as ADPs are usually found on the bottom of the priority list in early stages of the program. People, customer and contractor alike, put most emphasis on getting started, and getting finished is too far down stream for serious attention.

Retrieval of data after the fact is a serious cost impact and usually results in compromises that somehow "meet the intent of the requirement" but never really satisfy the requirement.

The problem is compounded as down-stream reviews, either programmed or in a contingency mode, are inconclusive because of lack of basic data that could have been available in the form required had the need been identified.

As a result of the lack of ADP definition earlier in the program, the GFP ADPs received by MMC at KSC were inconsistent in format, contained obsolete data, and utilized several different forms/methods for recording historical events and time/cycle data. This resulted in the expenditure of a large number of man-hours by MMC, MSFC, JSC, and KSC Quality and Engineering personnel to perform detailed reviews of the ADPs to understand the format, remove obsolete data, and summarize the historical data.

F. Recommendation - Establish a program ADP that is realistic and insist that all hardware suppliers comply.

4.12.3 Hardware Integrity Review

Quality participated in this review conducted by NASA/MSFC. This consisted of an in-depth review of the build documentation on selected critical MDA Systems. A complete review was made on these systems to establish the qualification hardware configuration compatibility with flight hardware. A detail review was also made to verify that flight hardware had all engineering requirements incorporated.

A review was also made of the failure history for these systems to verify that Material Review decisions made throughout the build and test program were still valid.

4.13 ACCEPTANCE MANAGER

The Quality Program Management and Mission Success Program Management fell under the office of the Acceptance Manager. Mission Success is covered in detail in sections 4.7 Nonconformance/FA Evaluation and 4.12.1 Hardware Review and will not be restated here.

4.13.1 Quality Program Management

This discipline related specifically to hardware acceptance and module acceptance for the MMC at Denver, MDAC-E and KSC.

A. Denver Acceptance - The MDA acceptance at Denver in December 1971 was the first SL Module delivered. This resulted in many additional "firsts".

(1) As stated earlier (4.12.2 MDA ADP) MPD 8040.14A, resulted from the MDA Acceptance Review, and became the guideline document for ADPs to the suppliers of SL hardware including flight, GSE, trainer, spares and GFP hardware.

(2) Certificate of Flight Worthiness (COFW) -

- During prep for MDA Acceptance, MMC was required to produce a COFW that certified completion (or incompletion) of contractual responsibility in Configuration Control, Manufacturing, and Test/Checkout of the Module.

- Skylab Program had no released or guideline document for the COFW. MMC negotiated for a COFW to the contractor's format. This format was used for each endorsement from MDA Acceptance (endorsement 1 through pre-FRR (endorsement 5).

- MSFC issued a COFW guildline/document, preliminary dated 20 April 1972 (and not officially released to date). The guideline document and attached letters provided enough latitude so that no change was required in subsequent MDA COFW endorsements.

- The COFW Log of Exceptions (LOE), attachment to the COFW, iterated exceptions to the certification statements on the cover sheet and served as a contractual status document that provided for documented acceptance of these exceptions when accomplished.

(3) Movement to MDAC-E - The MDA when accepted at Denver by NASA was transferred to MDAC-E for mate and integrated testing with the Airlock Module. This was unique in as much as the other SL Modules were delivered directly to KSC after acceptance.

B. Integration Activities at MDAC-E - COFW #2, AM/MDA Systems Integration and SAR Phase 2, was completed to certify status of the module at completion of modification and programmed integration activities at MDAC-E.

During the nine months the MDAC-E program enveloped, other SL Modules had been delivered to KSC. At the AM/MDA acceptance review at MDAC-E, KSC demanded that the various status documents i.e., COFW, Pack & Ship Instructions, Deferred Work, Programmed Modifications be collected into one document to give a complete picture of required pre-launch work items. KSC experience with other modules was less than desireable in that open work items kept croping up in various forms within the delivered module associated paper work. MMC developed an Open/Deferred Work Document ED2002-2045 for the Flight MDA that satisfied KSC requirements and became one of the status tracking documents at KSC.

C. KSC Activities - Acceptance Manager activities at KSC were administered by the MMC Quality Manager in residence at KSC. Activities were limited to contractor hardware responsibilities and a prominent role in "Readiness to Test" approval activities during pre-launch checkout.

D. Summary - SL experience in the various phases of acceptance reviews showed a definite lack of detailed planning and direction to hardware suppliers. As a contractor, the requirements for the most part had been met or exceeded to the contracting center and then without warning a new set of requirements or variations to original requirements were imposed when hardware was moved to KSC for pre-launch checkout.

Examples of the above are:

(1) MARS System used throughout the life of MDA program, at Denver and MDAC-E, but shifted to DR at KSC. This was costly since the contractor's data bank could not recognize DRs and they had to be transcribed to MARS for input to the flight data bank for CACC data retrieval.

(2) Delivered GSE & ADPs were determined to be unacceptable to KSC. A multitude of data elements had to be retrieved and assembled into a formal regemented data package that for the most part was never used at KSC.

(3) The Open/Deferred work document had to be developed at the last minute to satisfy KSC requirement. This was probably the most legitimate request of any, but the requirement surfaced at a most inopportune time.

E. Recommendations - Contracting agencies should recognize the requirements of the program to conclusion and impose these requirements on hardware suppliers in the contracting stage rather than post delivery stages.

4.13.2 NASA and MMC Program Management Interface

The NASA centers (both MSFC and JSC) established Resident Manager Offices at Denver to provide management of the Skylab Program. NASA delegated to the resident AFPRO Quality Assurance branch the responsibility for inspection, process control, MRB, and acceptance.

The MMC interface with NASA and the AFPRO was clearly defined and for the most part resulted in a smooth and expeditious operation. One exception was the processing of MRB dispositions. Although the AFPRO had the delegation to sign as the Customer MRB Representative, an excessive amount of time was occasionally required due to the requirement for obtaining signatures of concurrence from the following listed individuals prior to the AFPRO MRB signature:

- MMC PIE
- AFPRO Quality Engineer
- NASA Center
- Supplier Technical Representative (GFP Major Items)
- RMO

4.14 MISSION SUPPORT

A reference library was established that included the Flight MDA ADP as returned from KSC after launch and the contractor supplied build records. In addition, contractor supplier records were included as available. The library existed for the sole purpose of Mission Support.

Mission anomaly investigation was supported by the ready availability of historical records.

A separate and distinct element of available historical records was the Mission Success file of all anomaly documentation compiled throughout the program on all hardware supplied or procured by the contractor.

Quality played an important role in contingency operations both in contingency hardware production and delivery and historical data retrieval for evaluation and analysis.

5. LOGISTICS PROGRAM

5.1 LOGISTICS PLANNING

The first task assigned to the MDA Logistics Unit was the preparation of a logistics plan to support the MDA through the test program and launch. This plan encompassed the necessary disciplines to provide essential support for contractor maintained deliverable hardware. The plan was prepared compatible with the requirements of NASA headquarters AAP Logistics Requirements Plan NHB7500.3 and the MSFC AAP Logistics Plan MM7500.6. The MDA Logistics plan established policies and concepts through the performance of analyses and establishing support requirements to implementation of the logistics program. The plan was submitted as line item 3 of the DRL Annex I to Exhibit A to SOW Contract NAS8-24000. The Logistics SOW for the MDA contract included this plan by stipulating that MMC would implement a logistics program in general agreement with the plan. An internal MMC procedure was prepared to implement the Logistics Plan to establish the methods and provide the ground rules for accomplishing the complete logistics effort.

5.2 MAINTENANCE ANALYSIS

A maintenance analysis was performed on each system of the MDA to determine items subject to maintenance (scheduled and unscheduled) and the necessary spare parts, tools, equipment, documentation and personnel required. This analysis was done with the ground rule that MMC would perform all prelaunch maintenance tasks with MDA trained and certified personnel. This ground rule permitted the simplification of documentation and actual deletion of specific maintenance procedures. Each system was examined to determine what items were subject to failure or damage. Wearout was not a consideration because of the limited operating time expected during prelaunch activities and during the mission. Each item subject to failure or damage was examined to determine what method was to be used to detect a failure or malfunction and to isolate that failure to a replaceable or repairable item. The accessibility requirements and the spares, tools and documentation required for the replacement or repair in place of the failed item were then identified.

The results of the maintenance analysis were documented in the MDA Maintenance Requirements Document (MRD) SL-8841-70-2. This document was prepared for the use of MMC field technicians and was not submitted formally to NASA, although information

copies were provided to MSFC. The MRD consisted of two parts; Part I contained the maintenance concepts and constraints, and Part II contained specific logistics requirements and maintenance activities such as maintenance tasks, list of spares, transportation requirements, accessibility, special tools, retest requirements, etc.

The scheduled maintenance requirements identified in the MRD were extracted and made a part of the test procedures to insure that the tasks were accomplished in a timely manner on a non-interference basis with scheduled test activities. The MRD was used by technicians and test personnel to indicate what equipment and documentation was required when a malfunction was discovered. A completed nonconformance report form described the malfunction and disposition including the action taken and the retest requirements. The recommended disposition of failed items reflected in the MRD was accomplished by component nonconformance report disposition. All repairable items were subjected to failure analysis prior to repair. Because of this requirement and the cost of setting up depot repair capabilities, the MRD called for reparable items to be returned to the supplier for maintenance and refurbishment.

5.3 SPARES PROVISIONING/MANAGEMENT

Spare parts were identified during the maintenance analysis process with minimum quantities established based on probability of failure or damage. Initially, the flight article and its associated GSE were the only items requiring spares support, since the backup article was to be stored at Denver indefinitely. Under these conditions the planned availability of spares for certain high cost items with a low probability of failure, such as the S190 window, was from the backup article.

The funding for procurement of spares was accomplished based on an estimate of the initial establishment of a spares inventory plus factors for replenishment of items utilized and for repair of failed components. This fund was established and it was left to MMC to provide adequate spares for the program within the fund limitations. This method eliminated a great deal of spares documentation and resulted in a considerable cost savings to the contractor and NASA. The spare parts inventory was established at Denver and the custody of that inventory remained with MMC throughout the program. The fact that MMC had custody of the inventory expedited the repair and modification activity and allowed the movement of parts with a minimum of

paper work and formality.

When the capability to launch the backup article in accordance with the 10 month turnaround requirement was imposed by contract, the spares philosophy changed. Instead of supporting the flight article only, with contingency cannibalization of the backup, spares were required to support 2 articles and associated equipment at 2 different locations, simultaneously. This required procurement of those high cost items not previously programmed and increased quantities of those items in minimum stock balance.

The flight and backup articles, while at St. Louis, were supported from the Denver inventory. When the flight article was shipped to KSC selected spare parts were shipped to MMC stores at that site to preclude a delay in maintenance. Other items required at KSC were, many times, hand carried by MMC personnel who were traveling to KSC for other purposes. Total accountability records were maintained at Denver with close coordination with KSC. Through this coordination, failed items were returned to Denver without delay for failure analysis and disposition. In several cases failure analysis indicated a modification was more desirable than repair. When this occurred the modification was applicable to the flight, backup and spares. The failed unit was the first item modified and when available, it replaced the spare unit which had been installed in the flight article at the time of failure. The second modified item, normally a spare item, replaced the unit in the backup article and then the spare units removed from the flight and backup articles were modified and placed in spares inventory. Thus the availability of spare units facilitated the modification program without interference with the test activity.

Very few GSE spares were provisioned due to the nature of the GSE and its limited planned usage. There were occasions when a failure, damage, or loss required expeditious action to procure or build a part for GSE maintenance. On all such occasions, the required action was accomplished in a timely manner without impact to the field schedule.

After the launch of the flight article, the residual spares at KSC were returned to Denver for support of the backup article, which was in test at St. Louis. At this point, in accordance with the contract, no replenishment of spares inventory was made. The items in inventory which were obsolete were declared excess and disposed of. The rest of the inventory was listed in the

MDA Backup Article Storage Plan and shipped to MSFC for storage with the backup article.

5.4 OPERATION, MAINTENANCE AND HANDLING (OM&H) PROCEDURES

In consonance with the guideline of producing only that documentation required to enable trained and certified contractor personnel familiar with the equipment to operate and maintain it, there was originally no formal OM&H documentation planned. However, as the GSE list grew and more complicated equipment was added to the list, the MDA Program Office directed MMC to prepare OM&H procedures for all deliverable items of GSE. MSFC-SPEC-10M01776B was provided as a guide in preparation of these procedures. Rather than having many small manuals, it was decided to include procedures for each piece of equipment into one document covering all deliverable GSE. This was accomplished with one exception. The Television Ground Support Equipment was to be utilized by other than MMC personnel and a separate manual was prepared for it. This was published as document SL-8841-70-4, entitled "Skylab Program Television Ground Support Equipment Operation, Maintenance and Handling Procedure." The balance of deliverable GSE was covered in publication SL-8841-70-3, which bore the title of "Multiple Docking Adapter Ground Support Equipment Operation, Maintenance and Handling Procedure." All of these procedures were validated in the field and maintained current with engineering requirements. Eighty-four end items were covered in SL-8841-70-3.

5.5 TRANSPORTATION PLANNING

The MDA test program required the movement of the MDA from Denver to St. Louis for mating with the AM, further testing and delivery to KSC for prelaunch tests, and launch. MMC was responsible for the move from Denver to St. Louis and for technical support to MDAC for the movement of the mated AM/MDA from St. Louis to KSC. Transportation plans were written and published for the flight and backup articles covering the move from Denver to St. Louis. These plans encompassed MDA movement sequence, transportation mode and route, GSE required and related installation procedures, loading and off-loading procedures and preparation for receipt and inspection. The plan also served as a source document for preparation of the mated AM/MDA transportation plan furnished by MDAC-E. In addition to these two plans, other plans were prepared for the one G trainer move to MSC, the DTA to MSFC and the EMU to St. Louis and return. Special studies were also performed on the MDA/EREP transportation environments

and an alternate mode for the backup article transportation when it appeared NASA might not be able to provide the Super Guppy aircraft for that shipment. Transportation of MDA experiments, supplied to the MDA program as GFP, when transported separately was accomplished in accordance with the instructions provided in the OM&H Procedure and other data provided by the experiment developer.

5.6 DEVELOPMENT OF CRITICAL AND LIMITED LIFE COMPONENT DRAWING (CLLCD)

During the maintenance analysis effort, it was found that certain items would require special attention and special controls. The items and associated controls were identified in the "Critical and Limited Life Component Drawing" - 82051000010. This was a released engineering drawing which defined the criteria for selection of a critical and limited life component, the requirements/limitations placed on the hardware to achieve flight reliability, and the disciplines and controls utilized to assure that the requirements/limitations were complied with and implemented. A separate sheet was prepared for each item which included, as applicable, the operating limitation (time or cycle), calendar life, shelf life, vibration limitation, special packaging or handling requirements, special storage requirements and disposition if limitations were reached or exceeded. Implementation of the controls for this hardware was by Standard Procedure with Quality Control enforcing the procedure.

5.7 MODIFICATION (MOD) INSTRUCTIONS

Subsequent to the delivery of the MDA to KSC, engineering changes were accomplished by mod kit incorporation. Mod Instructions were prepared for each kit listing the kit components and materials, the tools required to accomplish the modification, GSE requirements and detailed instructions for incorporating the mod kit. These mod instructions were utilized at KSC by MMC personnel when attached to a TPS which authorized the work involved and made the incorporation mandatory. Included as a part of the mod instructions was an INC which was completed by MMC and NASA KSC Quality Control, following incorporation of the kit. This notification was forwarded to MSFC as a part of the configuration management effort. There were 40 Mod Instructions prepared by the Logistics organization.

5.8 TRAINING OF CONTRACTOR PERSONNEL

MDA training was developed and presented for both the flight

and backup articles in support of the Skylab Program. Flight article training included contractor training and personnel certification at Denver prior to delivery of the flight article, field training and certification at St. Louis during the integrated test program, and field training and certification at KSC prior to final test. This latter training was covered under separate NASA/KSC contract. Training on the backup article was provided at Denver and St. Louis.

Flight article training at Denver was implemented under the Denver Skylab Contractor Training Plan and Syllabus, December 1970 (revised June 1971) and covered MDA orientation under course SL-100, Skylab Familiarization; MDA structures and systems under course SL-201; MDA-GSE under course SL-202; and the Volumetric Leak Detector under Course SL-VLD. In the aggregate, this training provided overview of MDA configuration, and interface relationships; detailed description of construction features, functional operation, electrical sequencing and control, telemetry interface and experiment interfaces; and detailed familiarization with MDA GSE including the pneumatic checkout console, handling, access, transportation equipment and electrical checkout simulations.

Training for MDA test team activities at MDAC-E and personnel certification of test team members was implemented under the Skylab Field Personnel Certification Plan, December 1971, which extended the basic requirements of M-64-69, MMC Personnel Certification Plan, to cover field test activities. Existing MDA courses used for Denver training were updated, additional courses were developed, and training was presented for proficiency update and certification of selected MMC/MDA test team personnel. This technical training covered:

- MDA Systems and Structure
- MDA GSE and Tools
- M512 Materials Processing and Associated GSE
- ATM C&D/GSE
- CEC Leak Detector
- Volumetric Leak Detector
- Functional Test Set

Skills training and certification was provided for connector mate and demate, soldering fabrication and inspection, and plastics potting. MMC successfully coordinated with MDAC-E for training of MMC team personnel in the areas of access and control and environmental control area disciplines. The program used Videotape that had been developed for crew/controller training at JSC, Operations and Maintenance Handbooks developed by Skylab Logistics, and instruction by test and checkout personnel to reduce the requirement for instructor personnel.

The Denver based MMC Skylab Certification Board, in unison with the MDAC-E Field Certification Committee, operated within the guidelines established by M-64-69 to implement the Field Certification Program. Certification requirements were established, certifiable personnel positions and Field Certification Requirements Summary Charts were developed and approved. Approved certification cards were issued for individuals/teams which met position requirements. Board action and relevant certification activity was documented, and requirements for and approval of recertification was implemented. KSC test and checkout personnel took advantage of MDA training through participation in formal and on the job training offered at St. Louis. A high percentage of those personnel supporting the MDA area were drawn from the St. Louis team, having been trained and certified as part of the test operation. This highly effective program provided significant reductions in MDA training requirements at KSC. Three presentations of MDA training courses were presented at KSC to cover remaining resident personnel.

MDA Backup Article training and certification was conducted at Denver and at St. Louis. Existing MDA/Experiment courses were updated as required to reflect hardware and procedure changes. Applicable video tapes were used to the maximum extent. A reduced cadre of Denver instructors presented the training and supported the Certification Board.

5.9 INFLIGHT MAINTENANCE (IFM)

Initial design concepts excluded IFM as a requirement for Skylab and incorporated the use of highly reliable hardware and redundancy to insure mission success and provide for minimum utilization of crew time. This philosophy gradually changed throughout the program evolving into one of extensive planning and provisioning of IFM support. This change in philosophy initiated extensive design and hardware analyses to determine the maintenance capability necessary to support the hardware most

critical to the mission during flight.

Each task identified during the maintenance analysis was examined to determine if it was feasible for inflight accomplishment. The guidelines set forth for inflight maintenance candidates by MSFC/MSC precluded tasks involving:

- opening pressurized or fluid systems,
- working on live electrical systems,
- extra-vehicular activity,
- placing the crew in a hazardous position or environment.

Other considerations applied to the IFM candidates were accessibility of components, crew capability, fault isolation capability, tools required, spare parts and materials required and disposition of removed failed items. As the program progressed, more consideration was required for stowage of maintenance hardware, since the cluster weight and volume became limiting factors. Close coordination with stowage personnel at MSFC and MSC became mandatory. Scheduled activities were held to a minimum in order to conserve crew time. Requirements were established only when periodic cleaning, replacement of consumables or maintenance of cycle sensitive or time sensitive items was necessary. The requirements were included in the checklists as part of the normal housekeeping tasks. Performance of the tasks was controlled by the flight plan and scheduled to accommodate the crew workload.

Each MDA IFM candidate task was recommended by means of Engineering Change Request (ECR) to a level II Configuration Change Board (CCB). The recommendation provided a brief description of the task and included the tools and spare requirements together with their weights and volume and a recommended stowage location. Attached to the ECR was a Stowage List Change Notice (SLCN). Following CCB approval contractual action was initiated by the applicable centers to provide the necessary hardware and crew training. Some IFM tasks required SL-1 on-board support, while other tasks required the hardware to be available at KSC for stowage in the next CSM scheduled for launch. The approved MDA IFM tasks were reflected in SL-8841-70-6 "MDA Inflight Maintenance Data." This publication also listed the Skylab Tool Inventory and task/tool list and cross reference to flight checklist.

The crew was represented in each IFM review and were later trained on each approved task. This training included performance of the tasks on training hardware or during C^2F^2 activities. Real time contingencies were corrected by the development of tools, hardware and procedures as needed. Crew capabilities in accomplishing maintenance and utilizing contingency tools was dramatically demonstrated on the first manned mission when Conrad and Weitz freed the solar array boom on the OWS.

There was no corrective maintenance performed on MDA hardware during the SL-2 mission, but utilization of MDA tools was made in performance of corrective maintenance elsewhere in the cluster.

During the SL-3 mission there were two scheduled MDA IFM tasks accomplished which involved replacement of S-190 desiccants and cleaning the tape recorder heads. The SL-3 commander commented "Tape cleaning has been a piece of cake."

Corrective maintenance accomplished during SL-3 included replacement of the Video Tape Recorder (VTR) electronics unit and removal of the failed circuit boards for return in the CM. The spare VTR electronics unit was stowed in the OWS on SL-2 and the required tools and procedures were on board. During the replacement operation a faulty 3/16" Allen bit was found but was replaced with a bit from the spare tools on board. Replacement circuit boards for the failed VTR were launched on SL-4.

The Rate Gyro 6-Pack carried up on SL-3 to supplement the faulty rate gyros of the ATM was assembled and installed in the MDA. Installation of the 6-pack involved mounting the package and control unit on the MDA wall and, by EVA, connecting the cables with the cluster rate gyro system. The gyro package was then aligned to the cluster axes and checked out electrically and thermally, using a digital multimeter.

The S192 attenuator installed during SL-2 required adjustment during the SL-3 mission. To accomplish this a 3/32" screw driver blade was filed down to engage the adjustment screw. This was accomplished using the file blade of the Swiss army pocket knife. A spare 3/32" screw driver was available on orbit so the loss of the tool modified did not affect their capability.

Just prior to SL-3 deactivation the crew attempted to remove the kick plate from the ATM C&D Console in preparation for installation of the S082B Auxiliary Timer. Removal of the plate

was discontinued when Commander Bean reported it took twenty-two minutes and 30 seconds to remove five screws. The kick plate is held in place by 60 hi-torque screws and 18 hex head bolts. Although hi-torque bits were utilized, they were ineffective and the Commander resorted to the vise grip pliers. Development of a more suitable tool was initiated immediately and provided in time for flight on SL-4. The new tool had been approved by Commander Bean during the SL-3 crew debriefing.

The SL-4 CSM carried more items for accomplishing corrective maintenance than any of the previous CSM's. Included among these were replacement tools for those rendered unusable on previous flights such as dull scissors and knives, broken diagonal cutters, etc., and new tools required for specific tasks. Replacement circuit boards for the failed VTR were carried with the intent of repairing the failed unit if the VTR in operation failed. The second failure did not occur so the repair was not required.

Crystal Thermometers were installed on SL-4 mission day 6 to monitor the 6 pack rate gyros installed during SL-3. These were monitored every 2 days.

Installation of the replacement auxiliary timer for S082 was accomplished without the removal of the ATM C&D console kick plates for which a special hi-torque screw removal tool was developed. The connector which was thought to be difficult to locate without kick plate removal was located and reached with connector pliers from beneath the console.

The inoperative TV monitor in the ATM C&D console was replaced on mission day 10 with no reported difficulty. The replacement monitor was a resupply item for SL-4.

The spare S009 motor provided for SL-3 was installed on mission day 11 of SL-4. Failure of a speaker intercom assembly necessitated replacement with an onboard spare on mission day 15. Two spares were provided on SL-1. Both of these were required to replace failed units. The other replacement occurred in the OWS during SL-3.

An on-board spare S190 magazine drive was utilized for replacement of a malfunctioning drive mechanism on mission day 57.

Vacuum cleaning of the fan inlet screens was accomplished on a scheduled basis. However, the frequency of cleaning was

increased from 7 days during SL-2 to 3 days on SL-3 to 2 days on SL-4.

5.10 CONCLUSIONS AND RECOMMENDATIONS

The logistics program for the MDA, although austere, proved to be successful, economical and met the basic needs of the program. The latitude offered the contractor by NASA directing the contractor to be completely responsible for spares support throughout the program, within the funds limitation, was unique and economically advantageous to the program. The selection, procurement and management of spares by MMC provided adequate and timely support. The utilization of trained contractor personnel, familiar with the MDA, for all test, operation, maintenance and transportation activities minimized the amount of formal logistics documentation required.

The inflight maintenance planning and provisioning gave the crew adequate support. It is recommended that future manned space programs initiate inflight maintenance activities earlier in the program and that maintainability in flight be a greater influence in design. It is further recommended that inflight maintenance spares be furnished from residual ground spares, where practicable, rather than procured as designated inflight spares.

The capabilities for maintenance shown by the Skylab crews indicate that future programs should broaden the scope of candidate inflight maintenance tasks.

6.0 SAFETY PROGRAM

6.1 General

This section of the MDA Final Report is a chronological presentation of the MDA Safety program from initial MSFC/MMC MDA contract negotiations through design, manufacture, test and mission support. Every attempt has been made to avoid duplicating information that is contained in other documents; however, certain activities and functions which are specified in MDA associated documents will be identified in this section. These include design safety analyses, MDA test operations, crew and system safety requirements and the Manned Flight Awareness program. The final portion of this section will specify conclusions and recommendations which, if implemented, would assure improved safety performance on future programs.

MMC System Safety participation in the MDA Safety program began with MDA contract negotiations at MSFC. During these activities the MSFC MDA Project Office directed MMC to initiate an MDA System Safety Plan to establish the requirements, procedures, controls and methods which would be utilized in meeting NASA/MSFC manned spacecraft system safety requirements. This document is entitled The MDA System Safety Plan and is identified as document number ED-2002-1008. Contract negotiations for this plan were completed during the first quarter of 1970 and the plan was implemented shortly thereafter.

This plan was structured to meet the requirements of OMSF, AAP Program Directive No. 31, dated October 1969, for the implementation of system safety requirements and OMSF Safety Program Directive No. 1, Revision A, dated December 1969, for manned space flight system safety requirements. These documents and the MDA System Safety Plan stipulate System Safety responsibilities and address the safety function to MDA Design, Manufacturing, Test and on-orbit operations. Where possible, the plan provided safety surveillance and control for all MDA articles, i.e., the Flight, Backup, Neutral Buoyancy, Zero-G and One-G Trainer.

The plan also specified the accomplishment of safety analyses for all Flight Article MDA hardware. These analyses were conducted concurrent with MDA design activities and assured that hazards were identified early enough during the design phase to effect timely resolution. In addition to these activities, the plan also specified MMC System Safety participation in all MDA manufacturing and test operations. It should

be noted that Safety representatives from the NASA/MSFC MDA Project Office performed audits to assure that the MDA System Safety program was being conducted via the requirements of ED2002-1008.

Other safety functions accomplished during the MDA program included test facility and procedure review, on-site safety monitoring and serving as a member of the test validation teams at Denver, MDAC-E and at KSC. Associated safety functions included an evaluation of the safety impact any one modification may have on existing hardware and the need for safety training. Other functions included safety participation in mission support activities and the transfer of useful Skylab safety experience (in writing) for use on future programs.

6.2 Crew/System Safety

6.2.1 General

Crew/System safety as provided for in the MDA System Safety Plan considers that crew safety is safety during crew interface with controls and other on-board equipment, such as freedom from electroshock, cuts and bruises caused by sharp edges and protrusions, pinch points, etc. System safety as provided for in the MDA System Safety Plan is that safety which is inherent to any one or combination of systems. Some of the functions/activities accomplished during the MDA Project which provided for the assurance of crew/system safety were:

(1) Design safety analyses - these analyses addressed each MDA subsystem and included the MDA structure, mechanical, electrical, MDA experiments interface and associated GSE. These analyses were submitted in accordance with the requirements of line item 127 and 128 of the MDA Data Requirements Lists, Annex II to Exhibit A of contract NAS8-24000. These analyses were documented in ED-2002-2017 which was later revised to a change 5 configuration, dated 21 December 1971. (All EDCS and drawing changes issued beyond this date were assessed for safety impact by Systems Safety). These analyses were conducted concurrent with MDA design and were utilized at MDA program/design reviews. A total of fifty-six potentially hazardous items were jointly identified by respective MDA design elements and MMC System Safety. Some of these hazards could not be removed or sufficiently reduced by design; as such, appropriate operational constraints were identified. Some of the more signifi-

cant hazards identified in these analyses and corresponding design provisions were:

- o Contingency docking/crew isolation - MDA hatch launch lock was redesigned to permit launch lock dis-able from both sides of hatch.
- o Short circuits/arcs/possible electrical fire - additional fuses were provided at several power feeders in the ATM C&D Panel.
- o Spacecraft depressurization due to M512 vacuum vent line failure - a redundant vacuum vent line shut off valve was added at the MDA skin line.
- o Spacecraft depressurization/cabin pressure leaks - S190, S191 and S192 window installations were designed to incorporate dual panes/pressure seals.

(2) On-going Safety participation - System Safety participated in all potentially hazardous MDA handling, shipping and test operations.

(3) Sharp edge/protrusion/pinch point inspections - MDA crew operations and MMC System Safety conducted progressive inspections both inside and outside of the MDA in order to minimize the potential for crew injury.

(4) Manned Flight Awareness - MMC System Safety conducted a Manned Flight Awareness Program throughout the MDA Project per the requirements of NASA Management Instruction 1700.3. This program applied to the total MMC Skylab Project and consisted of personnel recognition, awards, honoree dinners and other motivational functions.

6.2.2 Test Phase

MDA tests as discussed in this section will address a broad spectrum of activities, e.g., manufacturing operations involving the MDA and its associated ground equipment; however, these functions are test related and warrant discussion at this time. System Safety participation in these activities throughout the MDA Project included test operations at MMC Denver, MDAC-E and KSC. Some of the major tasks accomplished by System Safety during this time were:

(1) System Safety review and approval of procedures. These procedures were used to move/handle the MDA as well as to accomplish acceptance tests.

(2) Critical test activities such as the manned altitude tests at MDAC-E and the inverted docking tests at KSC dictated that System Safety initiate test operations hazards analyses. These analyses were not required for delivery by DRL; however, they are on file at the MMC System Safety office. These analyses, plus daily System Safety participation in on-going activities were instrumental in assuring that these important activities were incident free.

(3) System Safety maintained a continuous monitor of all test operations and served as a member of the test validation team.

(4) During the period of time when the MDA was at the Denver Division the MMC Industrial Safety Department provided an on-going coverage of all activities to assure that a safe working environment existed for all personnel. MMC System Safety provided this coverage at MDAC-E and KSC.

6.2.3 Safety Training

Safety training on the MDA Project was a portion of a certification program which required that all personnel performing contract functions, including System Safety engineer, attend a training course for each applicable MDA subsystem. These courses also covered those experiments which interfaced with the MDA. Upon completion of these courses, a written examination with passing grades was required. In addition to these courses, special personnel safety classes were held to assure all personnel were qualified in the use of emergency equipment (breathing air bottles, oxygen, sensors, etc.) and that they understood and could safely use emergency escape devices such as the exit chute at KSC.

6.3 Conclusions

It is concluded that the safety program for the MDA met the requirements of the overall Skylab Program. The requirements of ED2002-1008 (MDA System Safety Plan) were complied with throughout the MDA Project and there were no significant incidents. Areas where improvement is indicated for future programs is included in Section 6.4 (below).

6.4 Recommendations

Safety hazards analyses as specified in Section 5.2 of ED-2002-1008 should not stipulate two different analyses (design safety analysis and test operations hazards analysis). Instead, safety plans should require a hazards analysis which begins at design and flows through manufacture, test and on orbit operations. This approach would more effectively accomplish the hazard reduction precedence sequence requirements specified in OMSF Safety Program Directive No. 1, Rev. A, dated December 1969.

Platforms used inside of the spacecraft during ground operations should be firmly secured to effect a rigid work station. All platform sections should incorporate bolts or pins to assure a solid attachment.

Platforms used inside of spacecraft during ground operations should incorporate debris shields (nets) around platform openings to catch any object which may be dropped. Also tethers should be used (where possible) to prevent any one individual from dropping objects. This requirement is especially applicable to the use of hand tools.

Removing/lifting handling tools/alignment frames, etc. from spacecraft - if the crane operator is remote from the item being lifted, an observer shall always be near the flight hardware/lifting tool interface to assure all flight attaching bolts are removed and the handling device is clear and free prior to effecting the lift.

7. TESTING PROGRAM

7.1 TEST REQUIREMENTS

7.1.1 Introduction

The purpose of this section of the document is to present the planning and definition of the total systems test acceptance program for the Skylab MDA. Included will be a discussion of the systems test requirements definition and associated source documentation, an overview of systems acceptance test implementation by formal procedures, a review of test requirements completion and overall verification by test compliance matrices, and a presentation of the techniques used for definition and control of special engineering tests.

7.1.2 Systems Test Requirements Definition

7.1.2.1 Approach

The basic approach for defining the MDA Flight Article Systems-Level ATP was the building-block technique. Starting at Denver, this method employed the following:

- Verification that component level acceptance tests were complete prior to component installation on the MDA.
- Verification that component qualification was complete at time of component installation on the MDA or would be completed prior to conclusion of KSC prelaunch testing.
- On-board MDA verification of component power and functional interfaces and performance.
- Subsystem and system level performance verification for the MDA systems only using CSM and AM simulators.

This testing was followed at St. Louis by mated AM/MDA testing where individual system performance was verified by power across the AM/MDA interface from the AM, simulated flight testing including EMC monitoring with all systems performing in accordance with a simulated orbital timeline, and selected MDA system performance during altitude chamber runs at simulated altitude. These tests included an unmanned outgassing test for toxicity determination and unmanned and manned tests at altitude for systems performance and crew interface testing. Testing at KSC continued the building block approach. In the O&C, the AM/MDA

systems were functionally verified with experiments and interfacing modules. A docking test was performed by physically mating the AM/MDA to the CSM. This test functionally verified the AM/MDA-CSM electrical and mechanical interfaces and the operation and compatibility of the vehicles during a mission simulation. Further intermodule testing was performed with the DA prior to transporting the AM/MDA to the VAB.

In the VAB, the AM/MDA was tested in overall cluster end-to-end systems and experiment verification. The SWS was also verified to be compatible with the launch vehicle.

7.1.2.2 Test Requirements Definition

Test requirements for the MDA Flight and Backup Articles were identified in four Test Checkout Requirements and Specifications Documents (TCRSDs). Discussion of the preparation and use of these documents in the total test program follows.

A. Denver and St. Louis Test Requirements - Formal MDA Systems Acceptance Test Requirements for Denver and St. Louis activities were defined in two documents for the Flight and Backup Articles: MDA Systems Test and Checkout Requirements (STACR), ED-2002-2020, and ED-2002-2032 respectively. These STACR documents identified the tests to be satisfied as defined in the acceptance test procedures with subsequent Martin Marietta and customer Quality Department acceptance. In addition to the Denver and St. Louis formal requirements, the documents also contained sections for KSC requirements as a guide. KSC test requirements will be discussed in 7.1.2.2.B.

Contents of the Flight Article STACR included:

- Scope of document.
- Applicable Documents.
- Overall Test Program description including program objectives and test descriptions, documentation control, test crew training and certification requirements, and specific MDA test policy rules.
- Identification of test locations for satisfying the test requirements to the subsystem test level.
- Subsystem, system, and multi-module test descriptions.

- Specific test requirements with criteria and specifications, considerations and constraints, and reference documents identification.

- Appendices including:

  - Measurements identification

  - Ground test limitations for critical and limited life components

  - Inflight Maintenance Spares Test Requirements

  - Detailed success criteria for experiments and subsystems and EMC testing

The Backup Article STACR was similar to the Flight Article STACR except for changes to the test program per contract direction, test location format identification simplification, and deletion of EMC testing (EMC tests are normally performed only on the first of a series of articles).

Sources of test requirements and their relationship with the STACR documents are identified in Figure 7.1-1. A brief description of these relationships follows:

- Cluster Requirements Specification (RS003M00003) - identified overall Skylab Cluster requirements and those imposed on the MDA were detailed in the MDA Contract End Item Specification.

- MDA Contract End Item Specification (CP114A1000026) - identified performance, design, test, and qualification specifications of the MDA. Section 4 of the document presented the verification method of satisfying each of the specifications whether by test (development, qualification or systems level acceptance) or assessment (similarity, analysis, inspection or validation of records). Systems level acceptance tests resulting from the CEI were defined in the STACR documents.

- MDA General Test Plan, Volume I (ED-2002-1005) - top level test plan which identified overall program tests on a general basis including those for the Flight and Backup Articles, the various development articles (One-G Trainer, Neutral Buoyancy Article, Static and Dynamic Structural Test Articles, etc.) and other development tests.

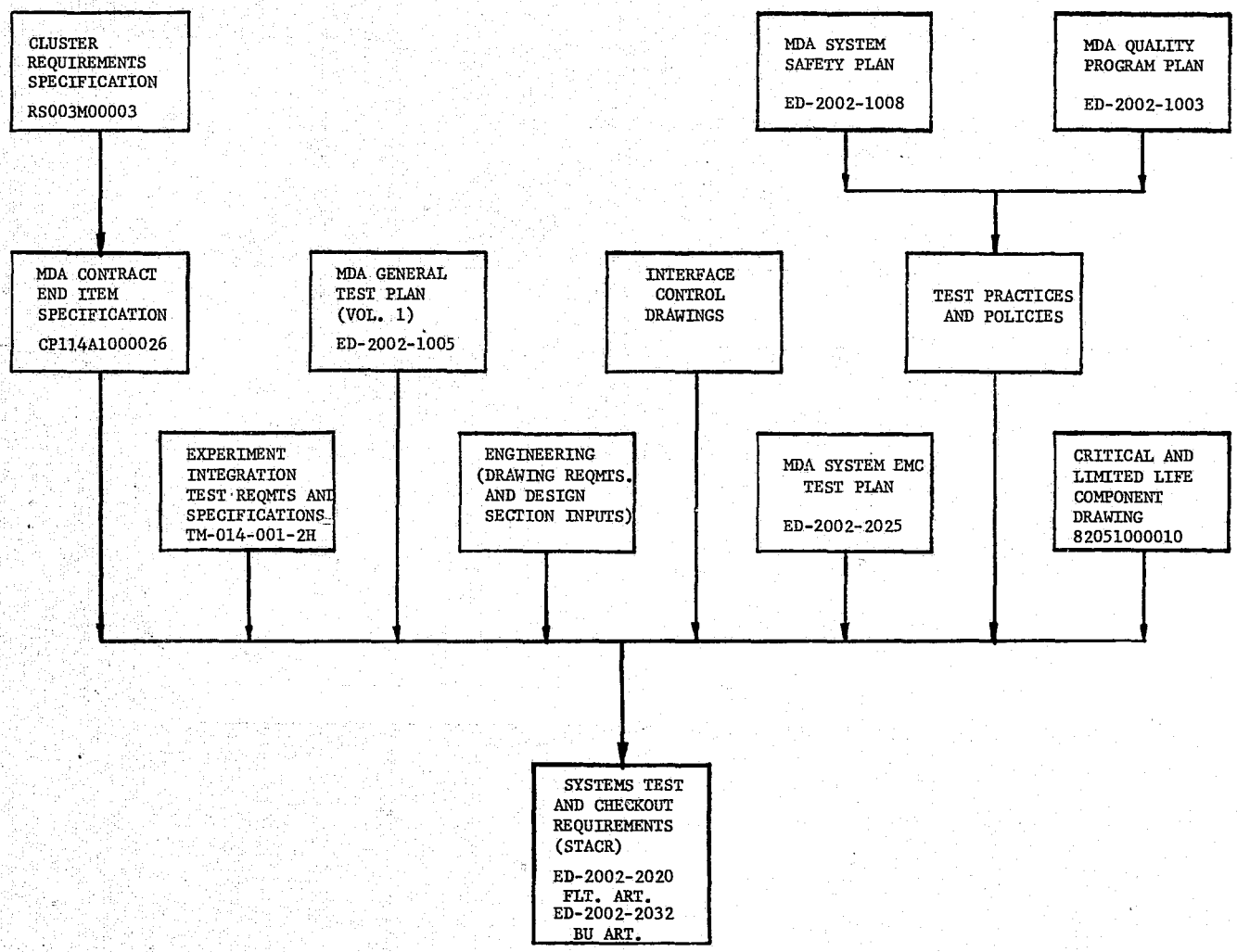

Figure 7.1-1 MDA Test Requirements Definition Tree

- Interface Control Drawings (ICDs) - all ICDs and their associated changes were reviewed and test requirements resulting therefrom were included in the STACRs.

- Experiment Integration Test Requirements and Specification Document (TM-014-001-2H) - MDA associated experiments test requirements from this document were included in the STACRs.

- Engineering Inputs - engineering drawings were reviewed for test requirements and these as well as Product Integrity Engineer inputs were included in the STACRs.

- MDA System Electromagnetic Control Plan (ED-2002-2025) - specific requirements of this document relating to the MDA Flight Article EMC tests were included in the STACR.

- Test Practices and Policies - these were included in the STACRs based on historically proven test techniques as well as those resulting from applicable portions of the MDA Safety Plan (ED-2002-1008) and the MDA Quality Program Plan (ED-2002-1003).

- Critical and Limited Life Component Drawing (82051000010) - This drawing was reviewed as part of the test program definition to ensure allowable ground test component cycles and times were not exceeded.

Change control of the STACR documents was performed by initially establishing the Denver and St. Louis section of each document as a baseline prior to start of tests at these locations. Changes subsequent to baselining were implemented by preparation, in-house, of an Engineering Design Change Summary (EDCS), submittal of a Preliminary Change Notice (PCN) to the customer, and following approval of the PCN by issuance of a STACR Change Notice (CN).

B. KSC Test Requirements - Test requirements for the MDA at KSC were defined in two TCRSD's as identified in Figure 7.1-2.

- Test and Checkout Requirements, Specifications and Criteria at KSC for AM/MDA, MDAC-E, MDC E0122.

- Skylab Integrated Systems TCRSD, MSFC, TM012-003-2H.

The AM/MDA TCRSD considered the AM/MDA as one cluster module - MDA inputs to this document used the KSC section of the Flight

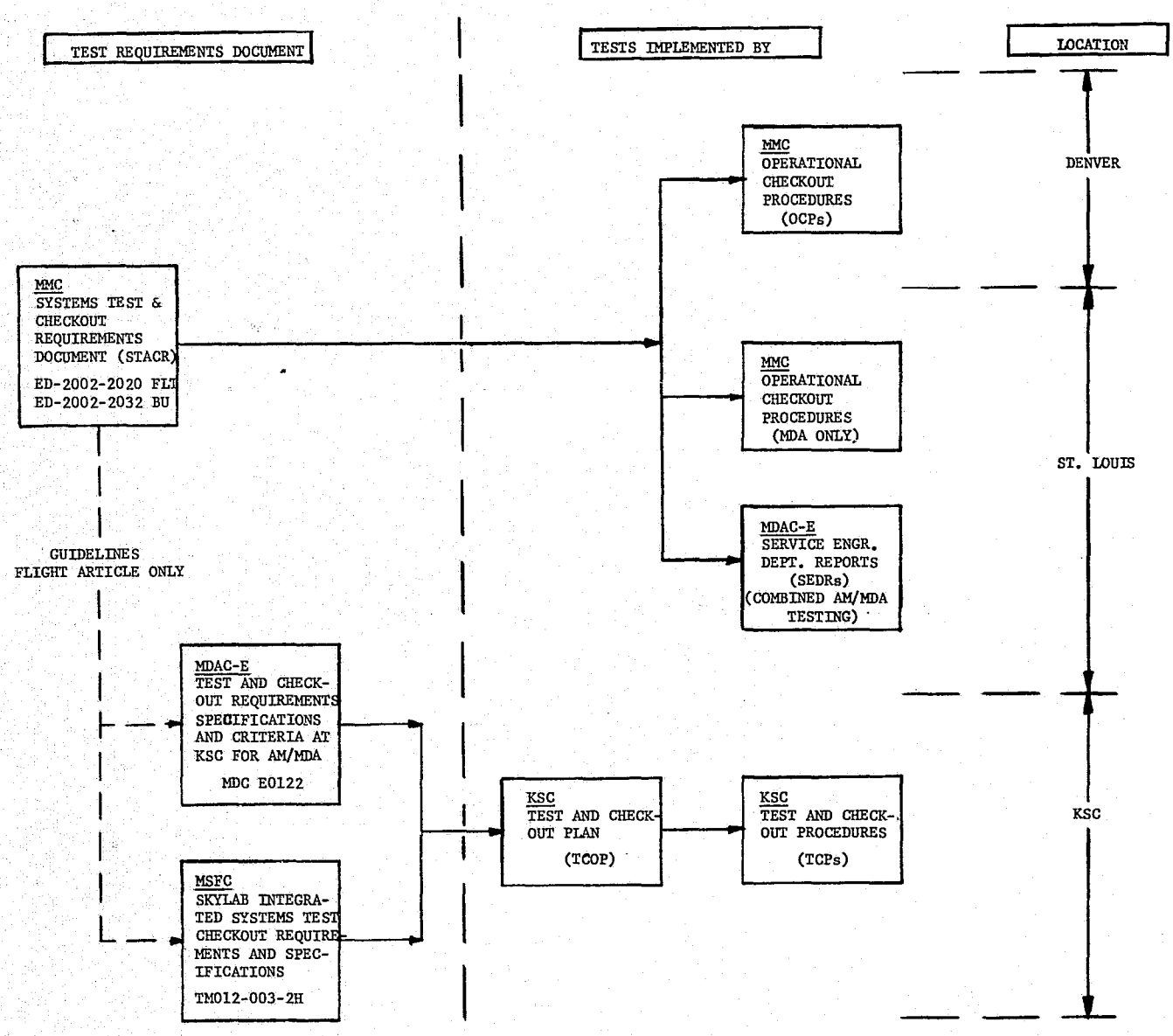

Figure 7.1-2 MDA Test Requirements Implementation Tree

Article STACR as a guide plus analysis of the total KSC program for other inputs. The Integrated TCRSD addressed multi-module testing and MDA test requirements were provided as direct inputs.

Change control for both of these documents involved initial establishment of baselines with subsequent changes provided by preparation of preliminary Test Change Notices (TCN's) submitted to the KSC Test Control Board and issuance of approved TCNs after approval.

7.1.3 Test Implementation

All systems-level acceptance test requirements at all MDA test locations were performed in accordance with formal, approved test procedures. The names (and format) of these procedures were different based on standard usage for tests performed at Denver, St. Louis, or KSC. Figure 7.1-2 identifies the various procedures used on the program. The test locations and procedure types were as follows:

- Denver - Martin Marietta prepared Operational Checkout Procedures (OCPs)

- St. Louis - MDA only testing (OCPs). Combined AM/MDA testing - MDAC-E prepared Service Engineering Department Reports (SEDRs).

- KSC - KSC Contractor prepared and NASA/KSC approved Test and Checkout Procedures (TCPs). The top level document which specified the procedure in which each of the TCRSD test requirements would be satisfied was the KSC Test and Checkout Plan (TCOP).

Formal procedure change control was used for each type of procedure and conformed to the standard practice of the issuing organization.

7.1.4 Test Compliance Verification

All procedures were performed with Martin Marietta and respective NASA center Quality Department surveillance and verification. To provide test program control and visibility, summaries of test completion compliance with the applicable TCRSD requirements were prepared in the form of compliance matrices for the MDA articles. These were:

A. Flight Article Compliance Matrices -

- Denver, STACR/OCP Compliance Matrix
- St. Louis, STACR/OCP/SEDR Test Requirements Compliance Matrix
- KSC, 1) MDA Open/Deferred Work Compliance Matrix, 2) E0122 Matrix, and 3) MDA/Integrated TCRSD TM-012-003-2H Compliance Matrix

B. Backup Article Compliance Matrices -

- Denver, Backup Article STACR/OCP Compliance Matrix
- St. Louis - STACR/OCP/SEDR Compliance Matrix

These matrices identified the TCRSD test requirement title, paragraph number, and the applicable acceptance test procedure sequence which satisfied the requirement.

For those cases where a test requirement could not be satisfied as a result of hardware shortage, schedule considerations, etc., the compliance matrix identified the particular Deviation Approval Request (DAR) which dispositioned the test requirement. Prior to Flight Article Testing at KSC, a summary document was prepared which identified all open work and tests remaining from the St. Louis test program. This document was "ED-2002-2045 Rev.5, MDA Planned Work at KSC." By these means, total test program control was provided to ensure completion of all tests prior to launch.

7.1.5 Special Engineering Tests

Special non-acceptance type tests were performed to provide data for resolution of various hardware problems. These tests were defined, including test requirements and associated procedural steps, in MDA program management approved "Engineering Test Orders (ETOs)." Various bench tests as well as tests on the Flight and Backup articles were performed at Denver and St. Louis (ETOs were not required at KSC). These ETOs were generally prepared in Denver but a special fast response loop was also established for Martin Marietta prepared ETOs at St. Louis to be performed on the Backup Article in support of the Skylab mission. In all cases, ETOs were prepared in accordance with proven test practices and performed with Quality Department surveillance. Data obtained from the tests was

provided to the appropriate design sections for analysis.

7.1.6 Systems Test Procedures

7.1.6.1 Introduction

The previous portions of this section identified the establishment of test requirements and their relationships to the implementing test procedures through final compliance. This section defines in detail the operation and implementation of the MDA Acceptance Test and KSC Systems Test Procedures that directed MDA testing at Denver, St. Louis, and KSC. Discussion of SEDR preparation at St. Louis is not included.

7.1.6.2 Denver and St. Louis Operational Checkout Procedures

A. OCP Form and Format - A new procedure form and format, referred to as Operational Checkout Procedure (OCP) was created for the MDA test program. Source information for this document consisted of the "Apollo Documentation Procedure No. 2 - Standard for the Preparation of OCP, MSC, April 1965." Selected portions of the OCP were derived from the Systems Assembly and Test Operating Manual TDM-2/1, "Manufacturing Test Engineering Conventional Test Procedures Implementing Instructions Manual." A new section devoted to MDA Operational Checkout Procedures (TDM 2-2) was added to the Operating Manual for MDA applications.

B. Draft Copy - The test engineer responsible for any given OCP, utilized the STACR, appropriate system schematics, MDA wiring lists, vendor drawings where applicable, information obtained from the PIE and information obtained from the customer to prepare the draft copy of the OCP. The final draft was reviewed with the lead test engineer, and the PIE prior to typing. The typewritten copy was checked for accuracy and turned over to the Test Support group for limited reproduction. These copies were used for the in-house approval signatures.

C. OCP Approval Loop - OCP approval activity was a two-stage function. The first stage consisted of the MMC departmental approvals. This group consisted of the lead test engineer, the responsible engineer (usually the PIE), the quality engineer, and the safety engineer. Copies of the OCP were given to each individual for their review. Comments and criticisms were redlined in these copies, coordinated with the other departments in the event of conflict, and all changes were made in the master copy. Signatures of the departmental representatives were then obtained. The approved master copy was then sent to Test Support

for customer reproduction and copies were forwarded to MSFC. Customer comments were worked off in a meeting with their representatives and the appropriate signature obtained after any necessary changes had been incorporated in the master copy. The customer approved master copy was then submitted to the Test Support group for release, reproduction and distribution of the fully approved OCP.

D. Performance and Validation - Procedure performance was accomplished in a slightly different manner for OCPs as compared with a conventional test procedure. A pre-test meeting was convened prior to the scheduled test start date. The attendees consisted of the customer's representative(s), quality, engineering (PIE), safety, manufacturing, test conductor, test engineer, and AFPRO (Denver). The purpose of this meeting was to verify vehicle configuration compatible with test requirements, presence of all required test equipment and calibration requirements satisfied, procedure status compatible with latest engineering and STACR change level, and availability of all personnel required to perform, witness and sign-off for acceptance. Upon agreement of the attendees that all requirements had been satisfied, a Certificate of Readiness to Test (CORT) was issued. This document was a prerequisite to the start of any test operations.

During the performance of the test, redlined changes were made to the procedure as required. Following completion of the operation, the redlines were incorporated by a validation Procedure Change Notice (PCN). The master copy of the OCP was signed off for validation by the same departments that approved the original issue.

Information from the released OCPs was utilized for input into an automated configuration control system. This information consisted of specification and/or drawing release levels in effect at the time of procedure release. With this system, a change to the requirements document precipitated a series of events which required action by the responsible test engineering (procedure preparation) group. When a Drawing Change Notice (DCN) was released into the MMC system, the computer automatically searched for any related procedure(s) affected by the drawing change. This search resulted in an open item tab run which was required to be investigated by the responsible test engineer. After receipt of the open item, the test engineer reviewed the drawing change for procedure impact. If procedural changes were required, a Procedure Change Notice (PCN) was prepared and the item was cleared. If no change was in order, then the engineer cleared the item by a no action (NA) input to the automated system.

7.1.6.3 KSC Test Procedures

A. Test Procedure Types - Martin Marietta inputs for KSC Test and Checkout Procedures (TCPs) were derived from TCRSD and TCOP requirements as previously discussed. These consisted of four established types of TCPs:

- Type A - A TCP which combined two or more flight hardware or GSE system tests or integrated an AM/MDA System Test.

- Type B - A TCP which tested a single MDA Flight or GSE System or a standard operating procedure for these systems.

- Type C -

  (1) A TCP which supplied specific information to define MDA and GSE electrical interface connections.

  (2) A TCP designed to provide test set-up information for GSE in a test area to establish a standard pre-test configuration.

  (3) A TCP designed to provide detailed steps for the moving and hoisting of major pieces of flight hardware.

  (4) A TCP designed to accomplish receiving and shakedown inspection.

  (5) A TCP whose prime purpose was the assembly of flight hardware.

- Type D - A TCP covering the laboratory operation of GSE.

B. TCP Preparation -

(1) AM/MDA TCP Preparation - MDAC prepared and released all AM/MDA Integrated TCPs. MMC prepared and/or coordinated MDA inputs to AM/MDA procedures for submittal to MDAC. Comments and changes were coordinated and resolved between MDAC and MMC prior to incorporation into the integrated TCP. The MMC

systems engineer signed the TCP.

(2) MDA Experiments (On-Module) TCP Preparation - MMC prepared and coordinated inputs for MDA installed experiments with MDAC engineering. These inputs were provided to MDAC for incorporation as written. MDAC change of the MMC input required prior approval from MMC. The MMC Lead Experiment Engineer approved the TCP.

(3) MDA Experiments (Off-Module) TCP Preparation - MMC prepared and released all TCPs for MDA experiments for off-module testing.

(4) Experiments Installation and Removal TCP Preparation - MMC prepared and coordinated inputs for installation and removal of experiments mounted on or in the MDA with MDAC. These inputs were incorporated as written and were not changed without prior approval from the MMC Lead Experiments Engineer.

(5) TCP Change Control - TCP changes were accomplished by a means of a Procedure Change Request (PCR). PCRs originated by MMC were approved by KSC elements. MMC, as the originator, was responsible for determining the impact, if any, on other organizations and performed the necessary coordination.

7.2 COMPONENT TESTING

7.2.1 Introduction

The MDA component test program was established and defined by ED2002-1005, MDA General Test Plan, Volume II, Component Qualification Plan. This plan defined the requirements for qualification by test for all Contractor Furnished Equipment (CFE) components and a system for review of test results for all MDA Government Furnished Equipment (GFE) components. The MDA subsystems that required component qualification testing were Instrumentations, Structure, Environmental Control and Electrical. All components in these subsystems were investigated to determine which could be verified by similarity and those requiring test to meet overall program performance and environmental requirements. The qualification test plan did incorporate the environmental technical requirements necessary to accomplish a complete quali-

fication (development, acceptance and qualification) program. Each tested component and its individual qualification test program is described within the Program Plan and a summary matrix of those individual programs is shown on Figure 7.2-1 herein.

7.2.2 CFE Component Test

The MDA component test program consisted of three (3) phases that were integrated to meet the rigid component requirements of the Skylab mission. These three phases were development, acceptance and qualification testing. The environmental criteria required for these three test programs was derived from the Cluster Requirements Specification (RS003M00003) and the Vibration, Acoustics and Shock Specification for Components on Skylab (IN-ASTN-AD-70-1).

7.2.2.1 Development Testing

Development testing was defined in the individual component specifications. These test programs and specifications were reviewed and approved by the MDA Test Integration organization in order to provide consistent test philosophy with the qualification requirements. All components that required testing were tested at full qualification levels. The test programs were conducted on an informal basis. This approach provided the flexibility necessary for a cost effective engineering development program. This component development approach met all program constraints and was completed in a time span that assured a well run qualification program.

7.2.2.2 Acceptance Testing

This phase of the integrated test program was performed on all components as defined in the individual specifications that were reviewed and approved by MDA Test Integration in order to maintain an integrated test philosophy. Acceptance testing consisted of performance and/or environmental (temperature cycling and/or vibration) tests that would verify and give assurance of the component's integrity and flight worthiness. Performance tests were conducted at nominal flight requirements and environmental tests at the predicted flight level requirements. Detail test definition and control was provided by the individual Acceptance Test Procedure (ATP). ATP's were prepared for each component requiring test and these procedures written by the vendor or MMC test operations. These test procedures were then reviewed and approved by the Product Integrity Engineer (PIE) and Quality Control. All ATP testing on flight hardware was conducted with

		QUALIFICATION TESTS																						DEVELOPMENT TESTS																									ENVIRON. ACCEPT TESTS				
ITEM DISCRIPTION	TEST LOCALITY	ACCELERATION	ACOUSTICS	BURST PRESSURE	BURST & COLLAPSE PRESSURE	CCOH	COMBINED LOW TEMP & SHOCK	EMI	HIGH-LOW TEMPERATURE	LIFE CYCLE	PERFORMANCE- PRE & POST TEST	PROOF PRESSURE	SHOCK-PYRO	SIMILARITY	TEMP-ALT-STORAGE & TRANSPORT	TEMPERATURE-OPERATING	THERMAL VACUUM CYCLING	VACUUM STORAGE	VIBRATION-RANDOM	VIBRATION-SINE WAVE	HIGH TEMPERATURE			BENCH OPERATING	BURST PRESSURE	FLEXING TEST	HUMIDITY	INSPECTION	LEAKAGE	PERFORMANCE	PRESSURE DROP	PRESSURE FATIGUE	PROOF PRESSURE	SHOCK-HANDLING	SHOCK-PYRO	THERMAL VACUUM	VIBRATION-RANDOM	VIBRATION-SINE WAVE	TEMP. ALT. STORAGE & TRANSPORT	STRESS-STRAIN	LIFE CYCLE	FLUTTER	METEOROID PENETRATION	LIFE	GLASS OPTICAL & STRENGTH	MISCL. MATERIALS TESTS	GALVANIC CORROSION	CONTAMINATION	TEMPERATURE	TEMPERATURE CYCLING	VIBRATION-RANDOM		
LIGHT SWITCH ASSEMBLY-INTERIOR	M				▲		▲			▲		▲		▲		▲		▲	▲																															▲		
POWER DISTRIBUTOR ASSEMBLY (9000)	M						▲			▲		▲		▲		▲		▲	▲																															▲		
VIDEO SWITCH	V				▲		▲			▲		▲		▲		▲		▲	▲																															▲		
GAGE ASSEMBLY-PNEUMATIC	V			▲	▲				▲	▲		▲			▲	▲		▲	▲																																	
ECS FLEX DUCT	V									▲				▲				▲	▲												▲	▲					▲	▲	▲															
FAN DIFFUSER	M									▲								▲	▲										▲																									
FLEX LINE (ATM C&D CONSOLE)	V			▲						▲	▲							▲	▲																																			
MUFFLER ASSEMBLY-OUTLET	M									▲								▲	▲										▲	▲				▲		▲												▲					
MUFFLER ASSEMBLY-INLET	M									▲								▲	▲										▲	▲				▲		▲												▲					
T.V. INPUT STATION	M				▲		▲			▲		▲		▲		▲		▲	▲															▲		▲													▲	▲	▲		
TRANSDUCER, PRESSURE, ABSOLUTE	V	▲								▲		▲				▲		▲	▲																																		
TRANSDUCER, TEMPERATURE, SURFACE	V				▲			▲		▲		▲				▲		▲	▲																																		
SIGNAL CONDITIONER ASSEMBLY	M							▲		▲		▲						▲	▲																															▲		
CONNECTOR, ELEC, HERMETIC FEED THRU	M									▲		▲			▲		▲	▲	▲																																		
CONNECTOR, ELEC, CIRCULAR, SCREW TYPE COUP.	M									▲		▲				▲		▲	▲																																		
CONNECTOR, ELECTRICAL, ZERO-G	M	▲					▲				▲							▲	▲	▲																																		
CONNECTOR, ELEC, CIRCULAR, SCREW TYPE	M									▲		▲						▲	▲																																		
CONNECTOR, COAXIAL, FEEDTHRU	M									▲		▲			▲			▲	▲																																		
HEATER SYSTEM DOCKING TUNNEL	V						▲		▲	▲		▲				▲		▲	▲																															▲		
HIGH POWER ACCESSORY OUTLET ASSY	M												▲																																								
THERMOSTAT ASSEMBLY	V				▲		▲		▲	▲		▲		▲		▲		▲	▲																															▲		
OUTLET BOX ASSEMBLY	M				▲					▲		▲		▲		▲		▲	▲																															▲		
WINDOW ASSEMBLY	V			▲		▲		▲			▲	▲	▲		▲				▲	▲					▲		▲		▲	▲			▲	▲	▲	▲	▲	▲		▲					▲						▲		
CONNECTOR, COAXIAL, RF (N SERIES)	M						▲				▲							▲	▲	▲																																		
SPEAKER, INTERCOM VIBRISOLATION SYS	M									▲		▲						▲	▲																																		
FILTER ASSEMBLY	M	▲	▲					▲	▲		▲		▲				▲		▲	▲																																		
BELLOWS, VENT LINE	V			▲	▲					▲	▲	▲							▲	▲																																		
MAN. OP VACUUM SHUT-OFF VALVE ASSY	M			▲		▲				▲	▲	▲	▲		▲		▲	▲	▲	▲										▲																								
SAFETY SHIELD, S190 WINDOW	M										▲	▲							▲	▲																																		
INSTL SUPPORT FITTING IR SPECTROMETER	M			▲							▲	▲	▲						▲	▲																																		
INSTL 10-BAND SCANNER WINDOW & SEALS	M			▲							▲	▲	▲						▲	▲																																		
COOLANT VALVE, MANUAL, 4 PORT SELECTOR	V			▲						▲	▲	▲							▲	▲										▲							▲				▲													
MDA PRESSURE HATCH & SEAL	M			▲						▲	▲	▲							▲	▲									▲							▲								▲										
WINDOW COVER MECHANISM	M		▲							▲	▲								▲	▲									▲																									
FLEXIBLE COOLANT LINE (EREP)	V												▲												▲	▲		▲	▲		▲	▲	▲				▲	▲			▲													
HEATER CONTROLLER & CABLE	V				▲		▲			▲		▲		▲				▲	▲																	▲													▲		▲		
POWER DISTRIBUTOR ASSY (9100)	M												▲																▲																									
EREP TR COOLANT SELECTOR VALVE	V												▲												▲				▲	▲											▲													
L-BAND TRUSS ELEMENT	M																																							▲														
PANEL TESTS	H																																									▲	▲											
INSULATION (BASIC)	H																												▲						▲	▲																		
MATERIALS	M																																													▲								
ATM C&D COOLANT LOOP	S																																														▲							
INSULATION BLANKET	H																													▲					▲										▲								

S = ST. LOUIS TEST
H = MSFC TEST
M = MMC (IN HOUSE) TEST
V = VENDOR TEST

Figure 7.2-1 Test Requirements Matrix

approved test procedures and 100% Quality Control test surveillance; this type of control was required for both MMC (in-house) and vendor (off-site) testing.

7.2.2.3 Qualification Testing

The qualification test program was conducted in accordance with the contractual program plan ED-2002-1005, Volume II. This testing was performed on flight type hardware to formally demonstrate that the developed design would perform according to specification under conditions that simulated the most severe mission conditions predicted plus a margin. All qualification test units were subjected to and successfully passed all performance/environmental acceptance test requirements prior to entering the qualification test program.

This test program was conducted in accordance with approved test procedures that implemented the Qualification plan. Once the test began, MDA Test Integration and NASA personnel provided 100% surveillance for all performance and environmental testing. Figure 7.2-2 depicts the Qualification Test Program Sequence and Figure 7.2-3 depicts the overall Qualification Test Span times. The MSFC MDA Program Office had final approval on test procedures, test reports and Qualification Test Summary Sheets (QTSS).

Qualification certification was required on all CFE components. This certification was accomplished by submitting a QTSS for customer approval. The QTSS was the final requirement of the program and contained the following information:

- Component name, component number, mounting locations, specimen serial numbers, subsystem, vendor/manufacturer, test laboratory and data report number. Qualification summary sheet serial number, date, program designation, and appropriate approval blocks.
- Component usage/functional summary.
- List of applicable tests.
- Test conducted per specification (statement)
- Brief description of problems including failure analysis and failure report numbers.

A minimum of two test units were subjected to the complete qualification program (all performance and environmental tests) with

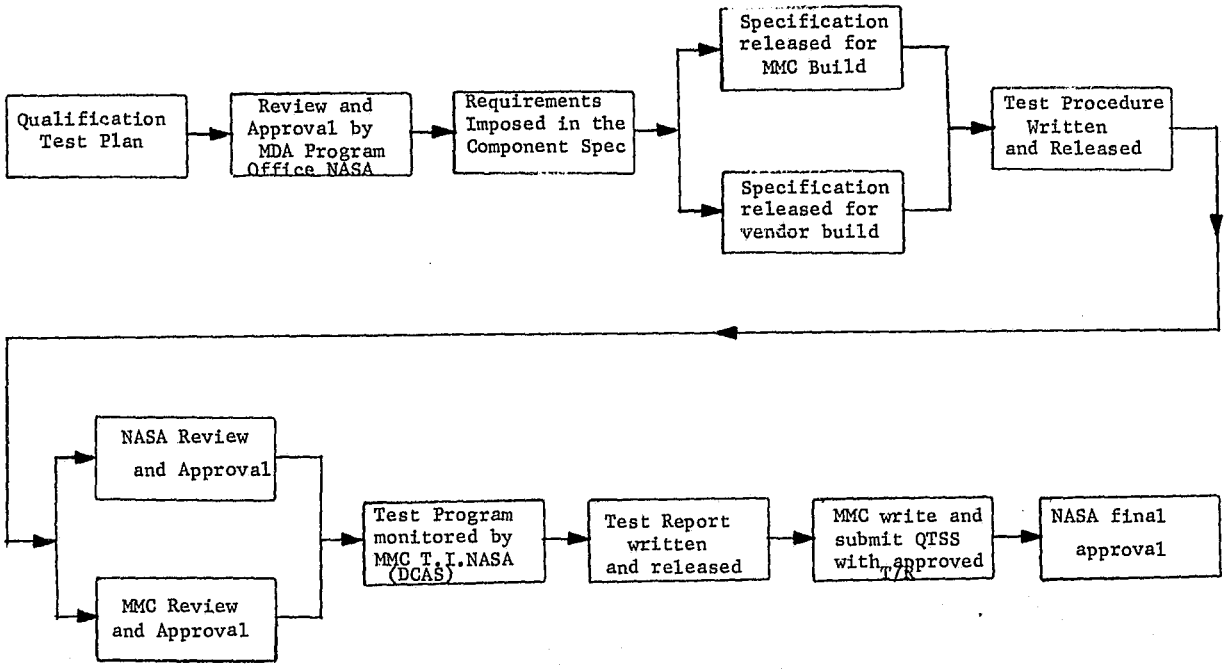

Figure 7.2-2 Qualification Test Program Sequence

COMPONENTS QUALIFIED BY SIMILIARITY OR TEST							
SYSTEM	QUALIFIED BY SIMILIARITY	DELTA QUALIFICATION	COMPLETE QUALIFICATION	TEST PHASING			
				1970	1971	1972	1973
Environmental Control Subsystem			9				
Electrical Subsystem	2	6	7				
Instrumentation Subsystem		2	2				
Structural Subsystem		1	6				

NOTE: There are 35 CFE Components; two by Similiarity, nine by Partial (Delta) Qualification Testing and twenty-four by Full Qualification Testing before delivery to Contractor.

Figure 7.2-3 Component/Subassembly Qualification

the exception of very large units, i.e., S190 Window Assembly. Where only one test unit was utilized, the test program was subjected to the same program constraints, however, in all programs, destructive testing was conducted at the end of the test sequence. The qualification program consisted of Vendor (subcontractor) and MMC built and tested hardware. Test locations did not influence the way in which the programs were managed, all program rigors were invoked on both types of hardware.

7.2.3 Government Furnished Equipment (GFE) Testing

The MDA GFE component test program was conducted and controlled by the responsible NASA organization, i.e., S&E Qualification Laboratory and the S&E-ASTN Laboratory at MSFC Huntsville. All program environmental criteria and design requirements were imposed by these same organizations in order to maintain one overall Skylab test philosophy. The GFP component tests were monitored by each individual Martin Marietta PIE through his counterpart engineer in the MSFC laboratories at Huntsville, Alabama. Although no formal control or review system was set up, MMC did maintain cognizance over the design and test of the MDA GFE components.

MMC received a Certificate of Component Qualification on all MDA Experiments and functional type components for review and retention. These certification sheets gave complete historical data on all aspects of the hardware test program.

7.2.4 Component Documentation/Test Program Flow (Sequence)

All performance tests were conducted in accordance with the component test procedure that implemented the test requirements of its detail design specification. Environmental tests were derived from the Qualification Plan and the EMI Plan. All testing in the component specifications was supplemented by the M-67-45 Test Methods and Control Document. Figure 7.2-4 depicts the MDA Component Test Documentation/Test Program Sequence Flow.

7.2.5 Summary

The Martin Marietta Corporation conducted an efficient and effective CFE Component Qualification Test Program.

This program was completed as scheduled and was not a constraint to the flight program.

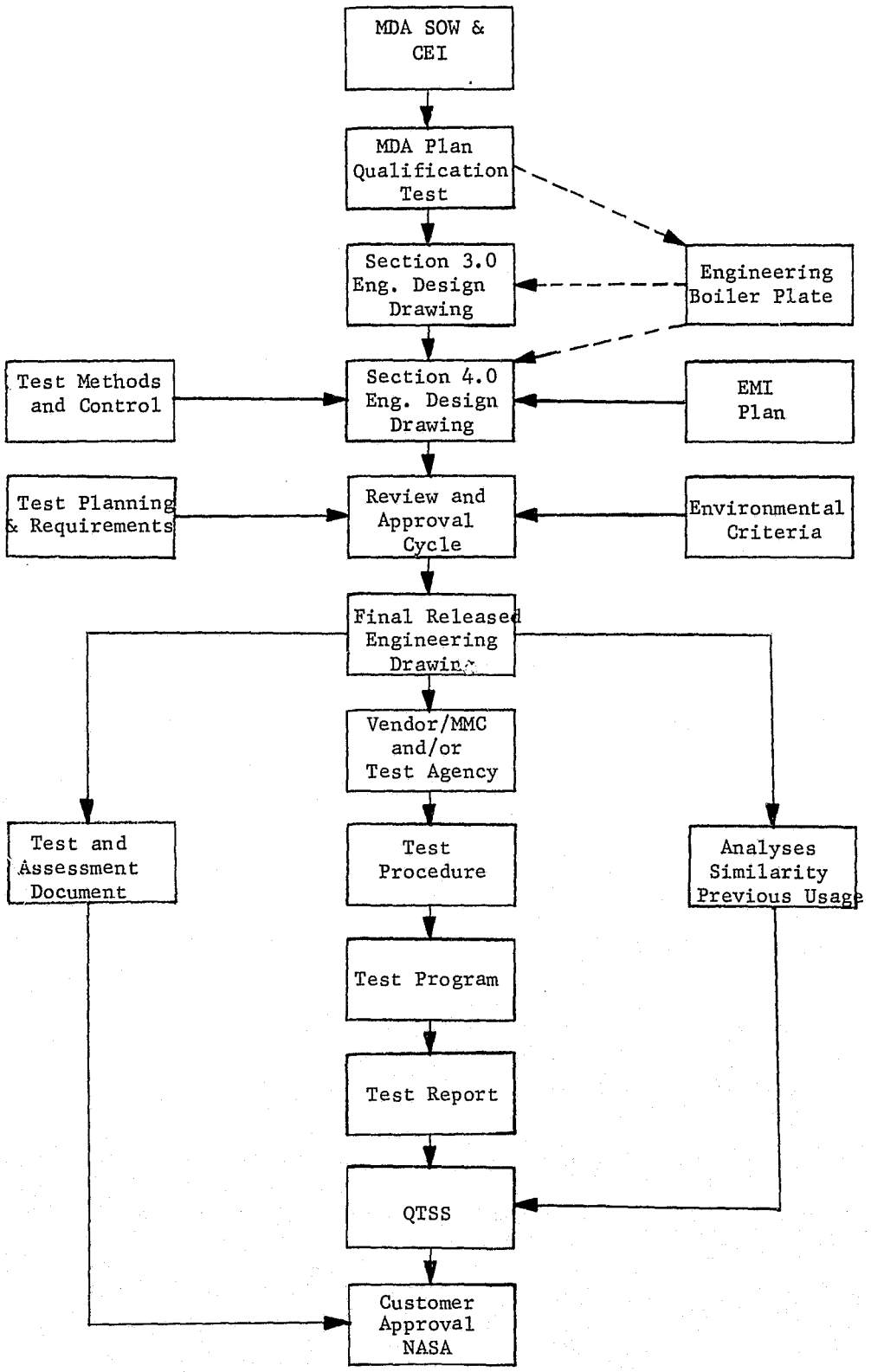

Figure 7.2-4 Test Documentation/Test Program Sequence

All component failures, refurbishment and/or replacements that occurred during the duration of the test program are documented in the respective system design sections of this document. (Ref. para. 2.2)

7.3 OFF MODULE TESTING

7.3.1 Introduction

This section discusses several major EREP tests performed off module or tests performed in support of module testing.

7.3.2 Pre-Installation Tests - Denver

7.3.2.1 Purpose

The purpose of this section is to describe Pre-Installation Testing (PIT) performed prior to on-module testing at Denver.

7.3.2.2 Scope

The Denver PIT test program consisted of the following test segments:

- Verification of the S190 experiment operation and interfaces using a S190 Electrical Test Set (ETS).
- Verification of the S192 experiment operation and interfaces.
- Verification of the S193 experiment operation and interfaces and the ETS required for experiment checkout and on-module operation.

7.3.2.3 Summary

- S190 operation was verified. A malfunction light problem was eventually traced to an ETS failure.
- Proper S192 operation could not be obtained.
- Lack of hardware familiarity and hardware problems were encountered during the S193 PIT. Correct gimbal interface voltages could not be obtained with the C&D Panel unclamped and power surges were noted on the power bus. Operating procedures were a problem due to complexity of the ETS and S193 operation.

7.3.2.4 Conclusions

The PIT testing uncovered many problems with S192 and S193 that would have greatly encumbered on-module testing. Problems with these experiments did continue on-module but the operating procedures were enhanced by having operated on the bench.

7.3.3 EREP Integrated Systems Bench Test - St. Louis

7.3.3.1 Purpose

The purpose of this section is to describe the EREP Bench Test Program where the on-module testing was performed on a bench. It includes the test operations and problems which were encountered and resolved or dispositioned during the testing at MDAC-E, Building 66. The test Data Analysis Report EREP Systems Bench Test MSC-03173 covers the evaluation of the processed data.

7.3.3.2 Scope

The St. Louis EREP Integrated Systems Bench Test Program consisted of the following test segments:

- Initial Experiment Support System checkout of the bench test hardware, at MDAC-E, Building 66, consisting of the development Control and Display Panel, the development Tape Recorder (T/R), Interface Functional Test Units (IFTU's) for the S192/S193 Experiments and flight configured development cabling for the IFTU's power, control, and timing interfaces.

- Verification of the S193 Flight Hardware operations during standby modes, warm up and interlock checks with the Experiment Support Equipment (ESE).

- Checkout of the ESE bench test hardware consisting of the flight hardware for the C&D Panel, T/R, S192 IFTU and flight configured development cabling for all EREP sensors.

- S193 Functional Interface Verification (FIV) Test with C&D Panel, T/R, and flight hardware.

- S192 FIV Test with C&D Panel, T/R, and flight hardware.

- Systems Functional Interface Verification (SFIV) Test with all Sensor and ESE flight hardware.

In addition, the test tooling and IFTU's were assembled and tested in the engineering laboratory at MMC-Denver and Building 103 at MDAC-E, to verify the configuration prior to interfacing with the flight hardware. This testing was conducted in accordance with the Skylab Program EREP Support Equipment Field Support Test procedure, MSC-03180.

7.3.3.3 Summary

As a result of the detailed evaluation of the EREP T/R data from the St. Louis testing, most of the EREP/MDA interfaces were verified. Additionally, several EREP problems were corrected and EREP was compatible as a system within limits imposed by the test hardware configuration. Although system performance was of primary concern, the results of the evaluation related to individual experiment performance.

Problems encountered during the performance of the testing at MDAC-E created numerous procedure deviations and Anomaly Reports (AR's). The ARs, which identified flight hardware and/or test tooling discrepancies, resulted in Martin Automatic Reporting System (MARS) being written for the rejection of the item and subsequent corrective action. These items are tabulated on Table 7.3-1 along with their final status.

7.3.3.4 Conclusions

The EREP Bench Test Program verified the compatibility of the EREP Sensors Flight Hardware and ESE when operated independently or simultaneously. Satisfactory disposition or corrective action was completed on all ARs prior to the disassembly of the test configuration. The Procedure Deviations were incorporated into the official test procedures and the information they contained was utilized to correct later test procedures for on-module testing

7.3.3.5 Documents

The following documents were utilized in the conduct of the MDAC-E, Building 66, EREP Bench Test Program:

- OMT-OCP-S-30036 — EREP Support Equipment Field Support Test Procedure
- OMT-OCP-S-20032 — OMT-S193 Off Module Test Procedure
- OMT-OCP-S-30046 — EREP Support Equipment Bench Functional Interface Verification

1. EREP Support Equipment Field Support Test - OMT-OCP-S-30036

Anomaly	Reference	Impact	Status
a. No significant anomalies occurred during this test.			

2. S193 Interlock Verification (Mini-Bench) OMT-OCP-S-30032

Anomaly	Reference	Impact	Status
a. C&D Countdown readout intermittent	B88072	Test tool change only	Closed
b. RCVR MALF light did not come on as required	B88115	S193 experiment rejected. Okay to test.	Closed - after next successful test

3. EREP Support Equipment Bench Functional Interface Verification - OMT-OCP-S-30046

Anomaly	Reference	Impact	Status
a. No data on track 24 of data tape	B88082	Test tool change only	Closed
b. GMT error at 20:00:00 and 19:57:40	B88186	Troubleshoot C&D and Timing Station	Closed
c. Lack of continuity in the Tape Recorder Load Box	B88080	Test tool cable change only	Closed
d. Tape Remaining indicator reading incorrectly	B88083	Reject T/R	Closed

Table 7.3-1 EREP Bench Test Anomaly Summary (St. Louis)

4. S193 Functional Interface Verification OMT-OCP-S-30042

	Anomaly	Reference	Impact	Status
a.	RCVR MALF light did not come on as required	Same as item 2.b, MARS B88115	S193 experiment rejected. Okay to test.	Closed - next successful test.
b.	Transmitter overheat on C&D Panel lighted.	MARS B87993 written during on-module FIV.	C&D Panel rejected.	Closed
c.	The Pitch and Roll Gimbal angle monitor meters on C&D didn't indicate the commanded Nadir Align offset at the completion of programmed Align Mode.	MARS B88085	Nadir Align operated without tolerance requirement for St. Louis testing.	Known discrepancy at G.E. to be TCO'd during retrofit. Closed:-next successful test.
d.	The lack of a return pulse caused the Alt. Ready light to go out.	MARS B88087	Special procedural sequence required to set up the ETS for S193 testing.	G.E. To resolve S193/ ETS compatibility during retrofit acceptance testing. Closed-next successful test
e.	The Altimeter didn't lock-up at low power level (-88 dbm)	MARS B88090	Marginal operation of Altimeter during test.	Closed - next successful test

5. S192 Functional Interface Verification - OMT-OCP-S-30041

a.	Intermittent loss of signal due to damaged cable 807W21	MARS B88144	Loss of data on track 21. The A/B cable assembly was substituted for tooling cable for MDAC-E testing.	Closed - the tooling cable was reworked.

Table 7.3-1 (Continued)

5. S192 Functional Interface Verification - OMT-OCP-S-30041 (cont'd)

b. Detector 3 ACC out of spec.	MARS B88084	S192 rejected - okay to continue test.	Closed during next successfull test.
c. Detector 8 ACC out of spec.	MARS B88096	S192 rejected - okay to continue test.	Closed after next successful test.

6. EREP System Functional Interface Verification - OMT-OCP-S-30044

Anomaly	Reference	Impact	Status
a. AUX Drive motor connector broken off	MARS B88151 MARS B88152	Repaired by splicing prior to continuing test.	Connector was repaired by Honeywell during rework. Closed during later test
b. Tape Reel rubbing against Tape Recorder case causing capstan tension	MARS B88153	Tape Motion light flickered on and off New tape reel installed.	Closed during later test
c. S191 Camera light didn't light when camera was turned on.	MARS B88140	The test film magazine was not spooled properly and the film jammed. No camera pulses were on the test data.	Closed

Table 7.3-1 (Concluded)

- OMT-OCP-S-30042 OMT-S193 Off Module Test Verification
- OMT-OCP-S-30041 OMT-S192 Functional Interface Verification
- OMT-OCP-S-30044 EREP System Bench Functional Interface Verification

7.4 STRUCTURAL TESTING

7.4.1 Introduction

The purpose of this section is to provide a synopsis of the MDA Structural Test Program. A more detailed description of this Test Program is documented in Section 2.2.1 of this report.

7.4.2 Static Test Article

7.4.2.1 Test Objective

The objective of the static test program was the structural verification of the MDA to the critical loading conditions encountered in boost, flight, and docking/latching. These tests were also used to verify analytical techniques used to predict stress levels and deflections.

7.4.2.2 Test Location

The testing was accomplished at the Structural Test Laboratory, Marshall Space Flight Center, during January and February, 1971.

7.4.2.3 Documents

- "Test Data Evaluation (MDA)" May 1971, MMC Denver, CO., ED-2002-1264.

7.4.2.4 Test Configuration

The Static Test Article consisted of the MDA shell structure including docking port, window and IR Spectrometer Backup Structure.

7.4.2.5 Test Summary

Nine separate loading conditions were simulated. The first three tests verified the structural integrity for local loading

conditions. Three packages were separately loaded with statically equivalent loads obtained from the vibration, acoustic and shock specification document (IN-ASTN-AD-70-1). The remaining six tests verified the integrity of the shell structure and consisted of various combinations of pressure and docking loads. A safety factor of 1.4 was applied to design limit, shear, moment, axial loads and 2.0 to pressure loads. Details of the static test are contained in ED-2002-1264.

7.4.3 Dynamic Test Article

7.4.3.1 Test Objectives

The objectives of these tests were as follows:

- Dynamic Verification of the Structural Assembly
- Verification of dynamic criteria
- Verification of Modal response data for structural model
- Dynamic structural qualification of flight hardware components

7.4.3.2 Test Location

The testing was accomplished at the Johnson Space Center between September 1971 and June 1972.

7.4.3.3 Documents

- "Skylab Vibroacoustic Test Program Phase II, Payload Assembly Acoustics Test Summary Report," MSFC, Huntsville, Alabama, S&E-ASTN-ADD-72-29.

7.4.3.4 Test Configuration

The Dynamic Test Article consisted of the Static Test shell with Mass and Center of Gravity simulators added for components which weighed more than 5 lbs.

7.4.3.5 Test Summary

The first phase consisted of acoustic tests simulating lift-off and boundary layer acoustic environments outside the Payload Assembly. The second phase consisted of sinusoidal excitation simulating launch vehicle cutoff and separation transients. The

third phase consisted of modal survey tests to verify mathematical models for the structural configurations.

The Payload Assembly vibroacoustic tests indicated no primary or secondary structural failures. This fact, considered in conjunction with the low stress levels indicated by the strain gages, resulted in the conclusion that the MDA structure was capable of sustaining the lift-off, boundary layer, and transient flight environments.

Details of the vibroacoustic tests are contained in S&E-ASTN-ADD-72-29.

7.5 MODULE TESTING - DENVER

7.5.1 Introduction

This section is primarily applicable to the MDA Flight Article with a Backup Article Summary included to present significant differences in their respective Test Programs.

A test flow, with general test description, is presented in the sequence in which the major tests were performed. Detailed test information may be found in the MDA Systems Test and Checkout Requirements Document (ED-2002-2020).

An overall Chronological Summary is presented in Section 2.1 of this Document.

There were no In-Flight Maintenance Spares tested on the MDA in Denver. Typical test activity for each of the OCP's consisted of the following major events:

- Pre-test meeting in which a general briefing on test activities was presented. Additionally, a Certificate of Readiness to Test (CORT) was obtained.
- Table-top review in which the test conductor and operating personnel discussed test methods and ground rules to be employed.
- Test Performance.
- Post test briefing to discuss anomaly resolution and to present test results.

7.5.2 Test Flow

A test flow is presented in Figure 7.5-1 including test event and Operational Checkout Procedure (OCP) Number.

7.5.3 Test Description

The following section presents the test descriptions by major test event in sequential order as indicated on the flow chart (Figure 7.5-1). See Figure 7.5-2 for the test schedule.

7.5.4 MDA Proof Pressure and Leak Test (MDA-8J11-LT)

7.5.4.1 Test Objective

Verify the shell integrity by performing a proof pressure test and leak check on the MDA Shell after penetrations and partial outfitting was performed in the factory.

7.5.4.2 Test Location - Leak Test Facility

7.5.4.3 Documents Used to Develop this TCP

- MDA Systems Test and Checkout Requirements Document (STACR) ED-2002-2020

7.5.4.4 Test Configuration

The MDA was tested in the horizontal position in the MDA transporter. Blank off plates were used to seal the shell penetrations where the flight hardware was not installed. The docking port tunnels were included in the test of the pressure vessel by installing sealing plates at the docking interfaces.

7.5.4.5 Test Summary

A proof pressure test was performed on the shell with no problems encountered and a visual inspection revealed no structural degradation. A leak test was performed using a detector solution. Leaks were noted in the docking tunnels and near a barrel longeron; these were documented and repaired after the MDA was moved to the factory.

7.5.5 MDA Electrical Systems Tests

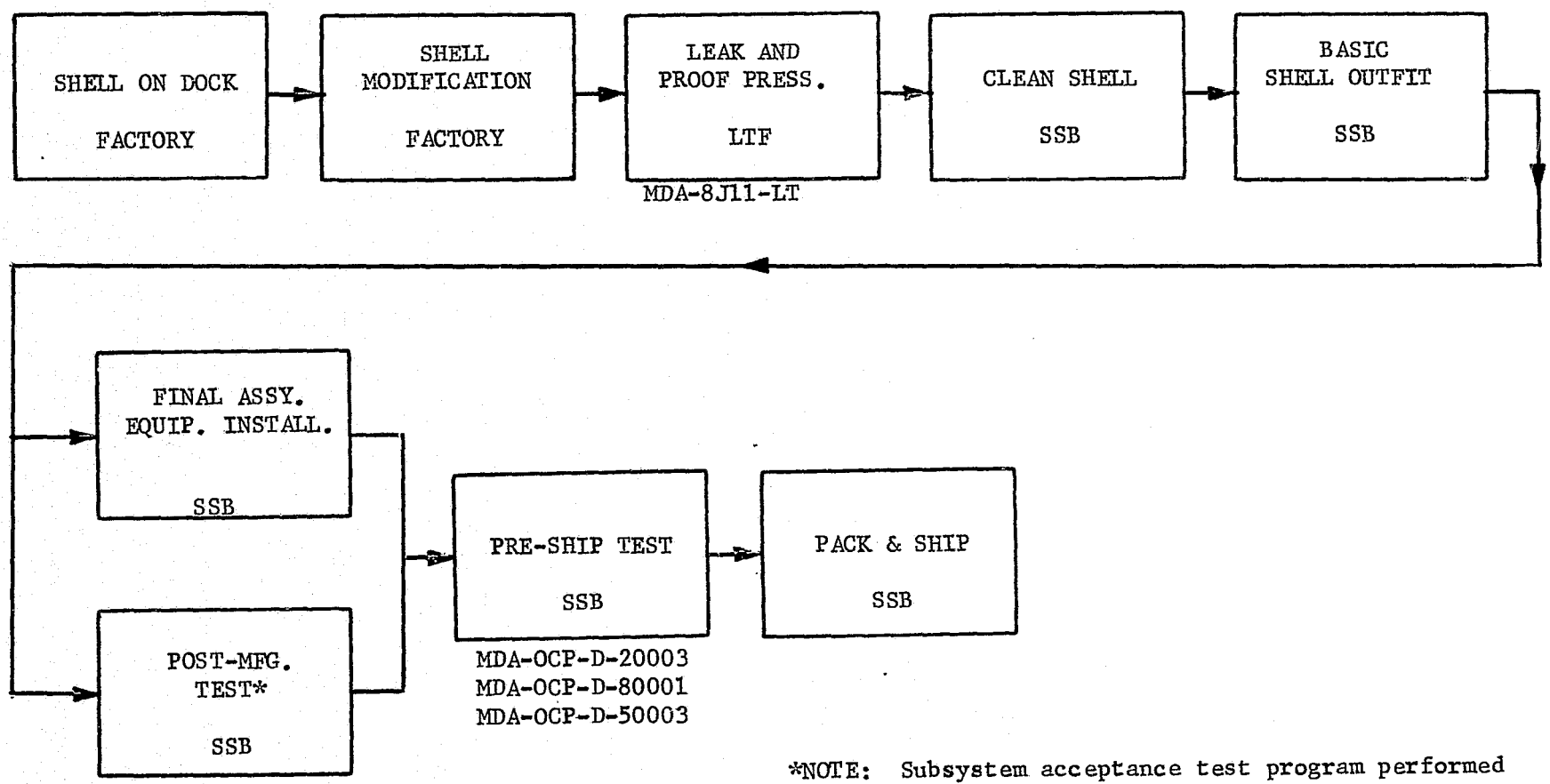

Electrical -
- MDA-OCP-D-10001
- MDA-OCP-D-60001
- MDA-OCP-D-60002
- MDA-OCP-D-60003
- MDA-OCP-D-60004
- MDA-OCP-D-40001
- MDA-OCP-D-40002
- MDA-OCP-D-70001

Mechanical -
- MDA-OCP-D-20001
- MDA-OCP-D-20002
- MDA-OCP-D-50001
- MDA-OCP-D-50002
- MDA-OCP-D-50004
- MDA-OCP-D-50006

Experiment -
- MDA-OCP-D-30001
- MDA-OCP-D-30003
- MDA-OCP-D-30021

*NOTE: Subsystem acceptance test program performed concurrently with final assembly activities.

LTF - Leak Test Facility
SSB - Space Support Building
MFG - Manufacturing

Figure 7.5-1 MDA Flight Article Denver Test Flow

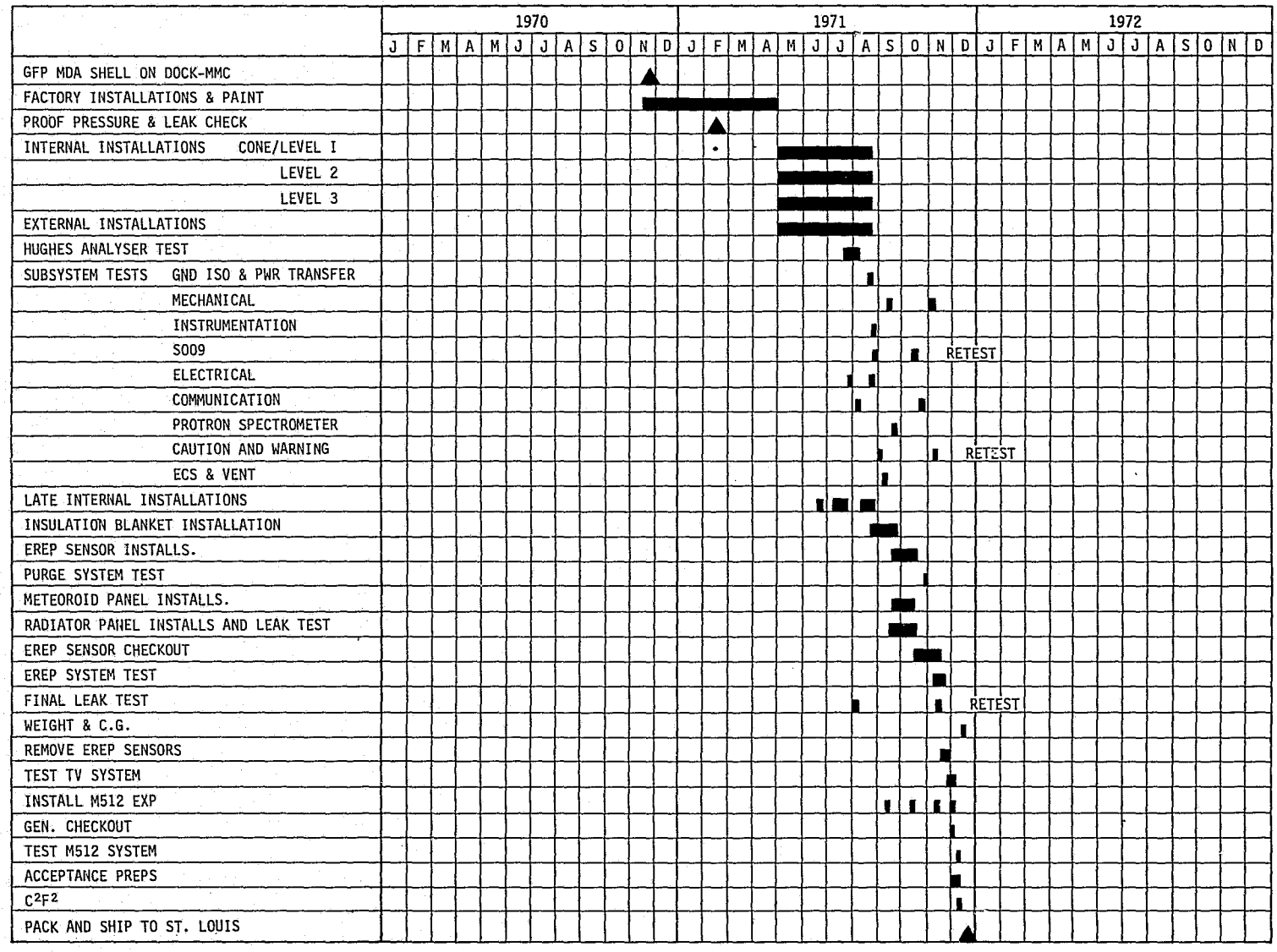

Figure 7.5-2 MDA Flight Article Denver Schedule

7.5.5.1 Test Objectives

These tests were designed to provide a complete check of the MDA electrical systems. They were intended to verify electrical system performance to the design and acceptance criteria specified in the STACR.

7.5.5.2 Test Location

SSB - Hi-Bay

7.5.5.3 Documents Used to Develop Electrical Systems OCP's

- MDA Systems Test and Checkout Requirements Document ED-2002-2020

7.5.5.4 Test Configuration

The MDA was tested in the vertical position, with work stands and platforms utilized. Power was supplied by an AM simulator to all AM/MDA electrical interface points. A CSM simulator was utilized for access to CSM/MDA electrical interfaces.

7.5.5.5 Test Summary

The electrical systems test program consisted of a total of eight OCP's. Prior to the performance of these, a complete wiring test was performed to verify cabling integrity. These tests were performed utilizing a Functional Automatic Circuit Tester (Hughes Analyzer). The eight OCP's were performed in conjunction with final assembly efforts which necessitated a considerable "Ad Hoc" scheduling effort. A system was tested as installation of system hardware was completed.

A. Ground Isolation and Power Transfer Test (MDA-OCP-D-60001) - The purpose of this test was to verify the ground isolation and the power transfer circuit operation of the MDA. This test was performed utilizing the AM and CSM simulators. Two problem areas were encountered prior to and during performance of the test. Hardware shortages dictated removal of some items from the ground isolation test portion of this procedure. These items were subsequently tested during individual systems performance testing. First usage of both the AM and CSM simulators uncovered wiring errors in these tools. After correction of these tool problems, the test was performed with no flight hardware anomalies encountered, and all test objectives were accomplished.

B. Electrical System Test (MDA-OCP-D-60002) - The purpose of this test was to verify the operation of all internal and external lights, outlet assemblies, heaters and thermostats, overtemp switches, and the S190 window heater control system. This test was performed utilizing the AM simulator for power and control inputs. Four problem areas (tooling, procedural, criteria and flight hardware) were encountered during performance of the test.

(1) First usage of the MDA checkout tool for utility outlet tests disclosed improper load settings, thereby creating an excessive voltage drop. Recalibration of the tool was accomplished and subsequent retest revealed no flight hardware anomalies.

(2) Several procedural errors were encountered, however, utilization of the validation team concept provided prompt action and resolution of the difficulties.

(3) Three interior lights failed the test criteria and were replaced. The test disclosed excessive power consumption whenever lights were powered up in the 'high' mode. Subsequent evaluation of this problem led to the modification of all interior lights to preclude further failures in this operating mode.

(4) The remaining problem area was concerned with apparent criteria violations. Utilizing the MMC 'Liaison Call' system, temporary specification changes were obtained. These changes were then incorporated into the STACR.

All test objectives were met with the exception of criteria violations of illumination levels which were approved by Deviation Approval Request (DAR) action.

C. Instrumentation System Test (MDA-OCP-D-70001) - The purpose of this test was to verify the operation of the signal conditioners, temperature transducers and pressure transducers. The instrumentation system was initially tested with a total of seven transducers not installed. Partial Retests (PRT) were performed as these installations were completed. One tool wiring error was detected and corrected during the test. Two transducers failed to meet the test criteria and were replaced. This problem was later isolated to improper installation. All

problems were corrected and retests performed with all test objectives accomplished.

D. Wall Heaters Thermal Test (MDA-OCP-D-60003) - The MDA wall heaters were tested to verify proper thermal bonding to the MDA. All heaters except wall heater number 10 passed original STACR criteria. The mounting of heater number 10 was determined to be different from the others and a criteria change was requested. The request was approved and all test objectives accomplished.

E. Caution and Warning System (MDA-OCP-D-10001) - The C&W system test was performed to verify system operation and surveillance of the proper areas of the MDA. The test consisted of two complete runs with run one conducted utilizing non-flight detector units. A burned out lamp was found in the Fire sensor control panel during run 2. The test was concluded after lamp replacement with all test objectives accomplished.

F. Communications Systems (MDA-OCP-D-40001) - The communications systems test was performed to verify speaker intercom performance and system compatibility. During performance of the test, it was found that the background noise seriously affected cross-talk testing whenever a live microphone on either SIA was required. The procedure was modified to utilize a 1000 Hz bandpass filter to eliminate the background interference. The test was successfully completed with no hardware anomalies detected.

G. Light Filter Illumination Verification (MDA-OCP-D-60004)- This test was performed with the light filters installed on the MDA general illumination light assemblies. Illumination levels were reduced by 85.7 percent, while the filter factor allowed by the STACR was 40 $\pm$ 10 percent. A criteria change, permitting a 90 percent maximum reduction, was requested and approved.

H. Television System (MDA-OCP-D-40002) - The TV system was tested to verify the MDA TV system performance and to evaluate cabling integrity (impedance and Voltage Standing Wave Ratio). Initially a TV input station was utilized which was later rejected following disapproval of a requested deviation. The input station was reworked and retested to the original criteria. Several problems were encountered and corrected during first time usage of the TV system ground support equipment. STACR change requests were submitted and approved and the overall test was concluded with all objectives accomplished.

7.5.6 MDA Mechanical Systems Tests

7.5.6.1 Test Objectives

The mechanical systems tests were designed to provide a complete check of the MDA mechanical systems. These tests verified mechanical system performance to design and acceptance criteria as specified in the STACR.

7.5.6.2 Test Location

SSB - Hi-Bay

7.5.6.3 Documents Used to Develop Mechanical System OCP's

- MDA Systems Test and Checkout Requirements Document ED-2002-2020.

7.5.6.4 Test Configuration

The MDA was tested in the horizontal and vertical positions with the appropriate work stands and platforms installed.

7.5.6.5 Test Summary

The following summarizes the various Mechanical System tests performed on the MDA.

A. Insulation Purge System Test (MDA-OCP-D-20001) - The purpose of this test was to verify the insulation purge system functional operation and the flow through the distribution lines. The only problem encountered during the performance of this test was in obtaining the dewpoint on the test gas per the MIL specification. This problem was cleared by means of a liaison call and the actual test operations were performed satisfactorily. All test objectives were accomplished.

B. MDA Leak and Decay Test (MDA-OCP-D-50002) - The purpose of this test was to verify compliance of the following; pressure equalization valve operation, pneumatic gage assembly operation, vent valve plug manifold leak rate, MDA shell leak rate, docking port hatch leak rate, battery vent line and S191 window leakage rate. Several problems were encountered during the performance of this test with three of these problems identified as test tooling items and corrected by tool rework action and subsequent retests. Leakage was found at a number of O-rings and bolt seals; these items were replaced and retested satisfactorily. The axial

hatch leakage rate was excessive and investigation revealed the launch lock "T" handle was not fully closed. The procedure was modified to verify full closure and retest verified compliance with test objectives. The volumetric leak test system was found to be incapable of verifying leaks in the 10^{-5} SCC/SEC range. The procedure was changed to utilize a CEC mass spectrometer for these measurements and the test was successfully completed.

C. Environmental Control and Vent System Test (MDA-OCP-D-20002) - The purpose of this test was to verify the operation of the pressure equalization valve, removal of the cabin fan and the CSM port fan, fan diffuser adjustment, vent valve operation and vent valve leak rate verification. The problems encountered during this test involved methods and criteria rather than flight hardware malfunctions. The STACR had to be modified to revise fan power consumption data. The work platforms prevented a check of the pressure equalization valve on the radial hatch and the platforms were removed. The CSM port fan would not operate until a larger fuse was installed in the test tool. The procedure was modified to perform a leak decay test on the vent valves instead of a media collection test. All objectives were met upon the conclusion of the test.

D. MDA Mechanical Devices Functional Test (MDA-OCP-D-50001) - The purpose of this test was to verify the operation of the docking port hatch, docking target base, film vault, flight data file, CO_2 absorber container and the miscellaneous stowage container. The mechanical systems test was performed in both the horizontal and vertical positions. Problems were encountered with the axial and radial docking port hatches with regard to axial hatch ball detent engagement and opening force, and hinge adjustment for both hatches, but these were cleared by rework and retest. The remaining anomalies dealt with the flight data file and the film vault doors and these were also cleared by rework. The test was performed successfully and all objectives were met.

E. S190 Window Cover Test (MDA-OCP-D-50004) - The purpose of this test was to verify operation of the window cover mechanism. One flag item was identified during the performance of this test, i.e., the running torque of the actuator mechanism was out of tolerance due to detent bracket interference. The detent bracket was reworked and retest was satisfactorily accomplished.

F. Final Insulation Purge System Test (MDA-OCP-D-20003) - This test was performed to verify flow through the insulation purge system was within specifications after the insulation

blankets were installed. The test was performed with no problems.

G. MDA Final Leak Test (MDA-OCP-D-50006) - The purpose of this test was to verify the leak rate of the MDA following installation and test of the flight hardware. Problems encountered during performance of this test were confined to the axial docking port tunnel. Eight wire support bracket mounting bolts were replaced with new hardware and seals. All bolts in the tunnel were reworked using M671A sealant. The final leak test satisfied all test objectives.

H. MDA Shipping Cover Leak Test (MDA-OCP-D-50003) - The purpose of this test was to verify the leakage rate of the shipping cover. The MDA shipping cover leak test was performed with the MDA on the transportation fixture, and the shipping cover installed. No problems were encountered during the performance of this test.

7.5.7 MDA Experiments

7.5.7.1 Test Objectives

The MDA experiment tests were designed to provide individual experiment installation verifications. The original test program for Denver included the M512/M479 and all EREP hardware checkout. Due to hardware shortages and the receipt of nonflight units, acceptance tests of these units were deferred to St. Louis.

7.5.7.2 Test Location

SSB - Hi-Bay

7.5.7.3 Documents Used to Develop Experiment OCP's

- MDA Systems Test and Checkout Requirements Document (ED-2002-2020)

7.5.7.4 Test Configuration

Experiment checkout was conducted with the MDA in the vertical position. Experiment power was provided by the AM simulator.

7.5.7.5 S009 Functional Test (MDA-OCP-D-30003)

The S009 test was conducted to verify experiment performance when installed within the MDA. Three problems were encountered during the test. The experiment carrier frame was found

to be defective and was replaced. Two criteria violations were found, i.e., an out-of-tolerance reading for input impedance and the detector package opened at 93.17 minutes (limit was 93.1). STACR change requests were submitted and approved. All test objectives were accomplished.

7.5.7.6 Radio Noise Burst Monitor (RNBM) Functional Test (MDA-OCP-D-30021)

The purpose of this test was to verify input voltage and RNBM functional operation. RNBM checkout consisted of two identical tests, one for the primary unit and one for the backup. Both units performed within specified values, however, S/N 002 was determined to be performing marginally. RNBM S/N 002 was removed and returned to the supplier. Retest of S/N 002 was accomplished at St. Louis.

7.5.7.7 Proton Spectrometer Test (MDA-OCP-D-30001)

The purpose of this test was to verify the power input, clock signal, temperature transducer operation and the functional capability of the proton spectrometer. Ground isolation failures were detected at the start of this test. Investigation revealed the ground return paths were caused by the connection of the GSE. The procedure was redlined to disconnect the GSE during ground isolation verification and reconnect after conclusion of this operation. PRT #1 satisfied these requirements. The clock signal interface verification requirements of 20 $\pm$ 2 VPP failed - actual voltage measured was 5 volts peak-to-peak (VPP). Investigation required a change to the STACR with respect to the voltage specified. A liaison call was written requesting the voltage be changed to 5 VPP. The L/C was approved and PCN AP to the STACR changed the voltage value. No retests were required. An out-of-tolerance voltage reading was obtained during the experiment functional test. This was identified as a procedure error with respect to time constant of the coarse delay setting. A change to 100 milliseconds on the delay factor produced the desired results on PRT #2. The temperature transducer verification test failed to produce the required current differential following the application of dry ice to the mounting surface. Investigation of this failure revealed the specified surface area was too small to produce a current change. The procedure was changed to provide a larger surface area for dry ice stimulation and PRT #3 satisfied this requirement.

7.5.8 Crew Systems

7.5.8.1 Test Objectives

The Crew Compartment Fit and Functional (C^2F^2) test, MDA-OCP-D-80001, was performed to verify crew to MDA compatibility.

7.5.8.2 Test Location

SSB - Hi-Bay

7.5.8.3 Documents Used to Develop C^2F^2 Systems OCP's

- MDA Systems Test and Checkout Requirements Document ED-2002-2020

7.5.8.4 Test Configuration

The MDA was positioned in the vertical and horizontal positions for this test. The AM simulator was used to provide power for the interior general illumination lights and cabin fans. All existing flight hardware was installed or stored in the vehicle prior to the start of the test.

7.5.8.5 Test Summary

The C^2F^2 test was originally intended to checkout the vehicle completely outfitted with flight hardware. Due to equipment shortages and shipping delays the MDA was not in a flight ready configuration at the time the test was scheduled. The test was performed with astronaut participation and numberous flag items were obtained. The majority of these flags were due to non-flight hardware items or the absence thereof. The C^2F^2 effort therefore became a continuing one with additional tests planned at St. Louis and KSC. Open items generated against Denver installed flight hardware were cleared during the St. Louis and KSC retests.

7.5.9 Back-up Article Test Program Summary

All acceptance test requirements scheduled to be completed on the B/U MDA in Denver were successfully accomplished (see schedule in Figure 7.5-3) with the following exceptions:

- Emergency Illumination Verification - illumination level exceeded specifications

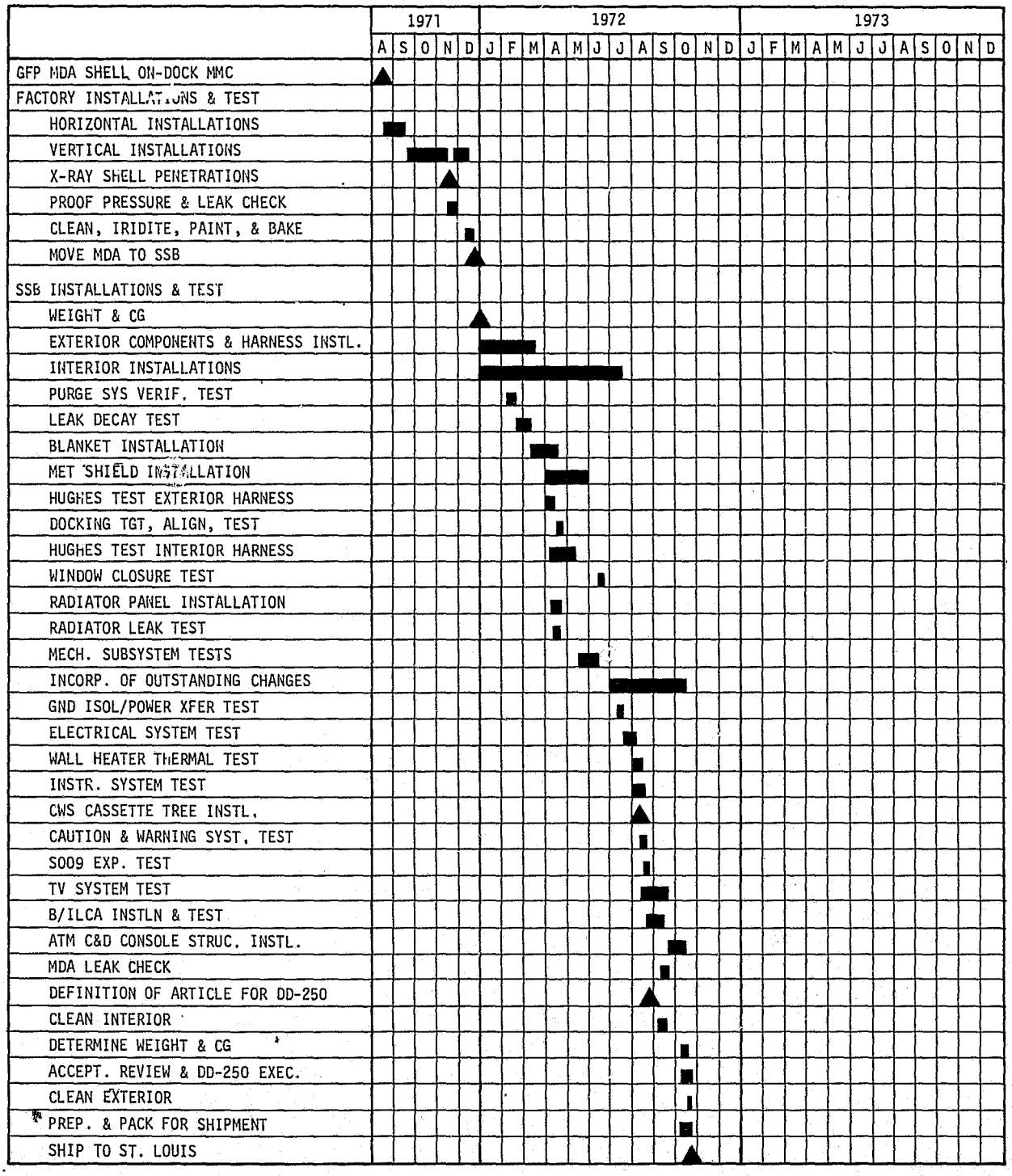

Figure 7.5-3 MDA Backup Article Denver Schedule

- S190 Window Heater Control System Verification Control box removed by flight article'rob'order prior to test

- ATM Video Signal Verification - Frequency response at 4 MHz exceeded specifications

- CO_2 Container Verification - GFP canister not available for test

All of the above items were covered on waivers.

The Backup MDA test program proceeded with no major problems encountered. Although the magnitude of the task was comparable to the effort required on the Flight Article the test operations were conducted with a 40% reduction in personnel. Even with this reduction in the work force the Backup article was shipped on schedule with non-conformance work items equivalent to 10% of the Flight Article status and storage shortages approximately 20% of those of the Flight Article.

7.6 SPACECRAFT SYSTEMS TESTING - ST. LOUIS

7.6.1 Introduction

The Flight and Backup MDAs were shipped to the MDAC-E in St. Louis, Mo., where they were mated to the corresponding Airlock Modules for further testing.

MMC established a Field Test Operations office in MDAC-E facilities that included all disciplines necessary to conduct and support acceptance testing. Acceptance testing of MDA hardware in St. Louis could be classified as "MDA only" testing which did not involve AM hardware or require direct MDAC-E participation and AM/MDA Integrated Testing. MDA only testing was performed by MMC personnel per MMC Operational Checkout Procedures (OCPs) and did not require MDAC-E participation. Integrated systems testing was conducted by MDAC-E personnel to their test procedures, Service Engineering Department Reports (SEDRs). MMC reviewed and approved SEDRs and participated in all testing that involved MDA hardware.

There were some differences in Flight hardware testing and Backup hardware testing. Differences were due to hardware availability, the stage of hardware development, and contract direction. Had the Backup hardware been scheduled to fly, it would have been subjected to testing nearly identical to that of the Flight Article.

Flight and Backup Article test differences (deltas) are identified and explained in the body of this section.

7.6.2 Test Requirements

All MDA acceptance testing was controlled by specific test requirements that were identified in two Systems Test and Checkout Requirements Document (STACR). STACR ED-2002-2020 identified test requirements for the Flight MDA and STACR ED 2002-2032 identified test requirements for the Backup Article. The requirements identified in the STACR documents were extracted from pertinent End Item Specifications, ICDs, engineering drawings, specifications and related documentation as applicable. The STACR documents were generated by MMC Test Planning and Requirements section and were approved by MSFC. They were continuously updated throughout the life of the MDA test program and included the specified test location where each requirement should be satisfied, i.e., Denver, St. Louis, or KSC.

After testing was complete, matrices were constructed that identified STACR requirements planned to be satisfied in St. Louis, and the test procedure that satisfied each requirement. If a requirement was not satisfied by test, an explanation was given and/or it was identified as a requirement to be satisfied at KSC. (Flight only)

7.6.3 MDA Flight Article Acceptance Testing

7.6.3.1 Scope

This section summarizes the significant test programs conducted at St. Louis involving the MDA Flight article. The programs are discussed in chronological sequence.

7.6.3.2 MDA Flight Article Testing

Test Flow - Tests performed on the MDA Flight Article are shown on the flow diagram in Figure 7.6-1. The flow diagram identifies tests by title and procedure number. Dates the tests were performed are included.

7.6.3.3 MDA Radiator Leak & Flow (SEDR D-H41-1)

A. Test Objectives - To verify the leakage in the MDA radiator and to verify the pressure and flow characteristics prior to mating with the AM ECS system.

B. Test Location - MDAC-E Building 66.

C. Test Configuration - The test was performed on radiators installed on the MDA with the MDA in the vertical position.

D. Test Summary - All test objectives were met.

7.6.3.4 Crew Compartment Fit & Function (C^2F^2) (Vertical), (MDA-OCP-S-80001)

A. Test Objectives - C^2F^2 tests were performed by the crew to verify equipment stowage and installation so that crew members could readily and safely use it to accomplish mission objectives.

B. Test Location - MDAC-E Building 66.

C. Test Configuration - Testing was performed with flight hardware (and some "flight type" hardware) installed in flight locations. The MDA was in the vertical position.

D. Test Summary - C^2F^2 testing with the MDA in a vertical position was done incrementally as flight hardware became available on January 28, February 9, and February 25, 1973. Some non-flight hardware was also used to verify stowage procedures. The only major problems encountered were caused by the use of non-flight hardware. The recommended solutions were to perform the tests again when flight hardware became available.

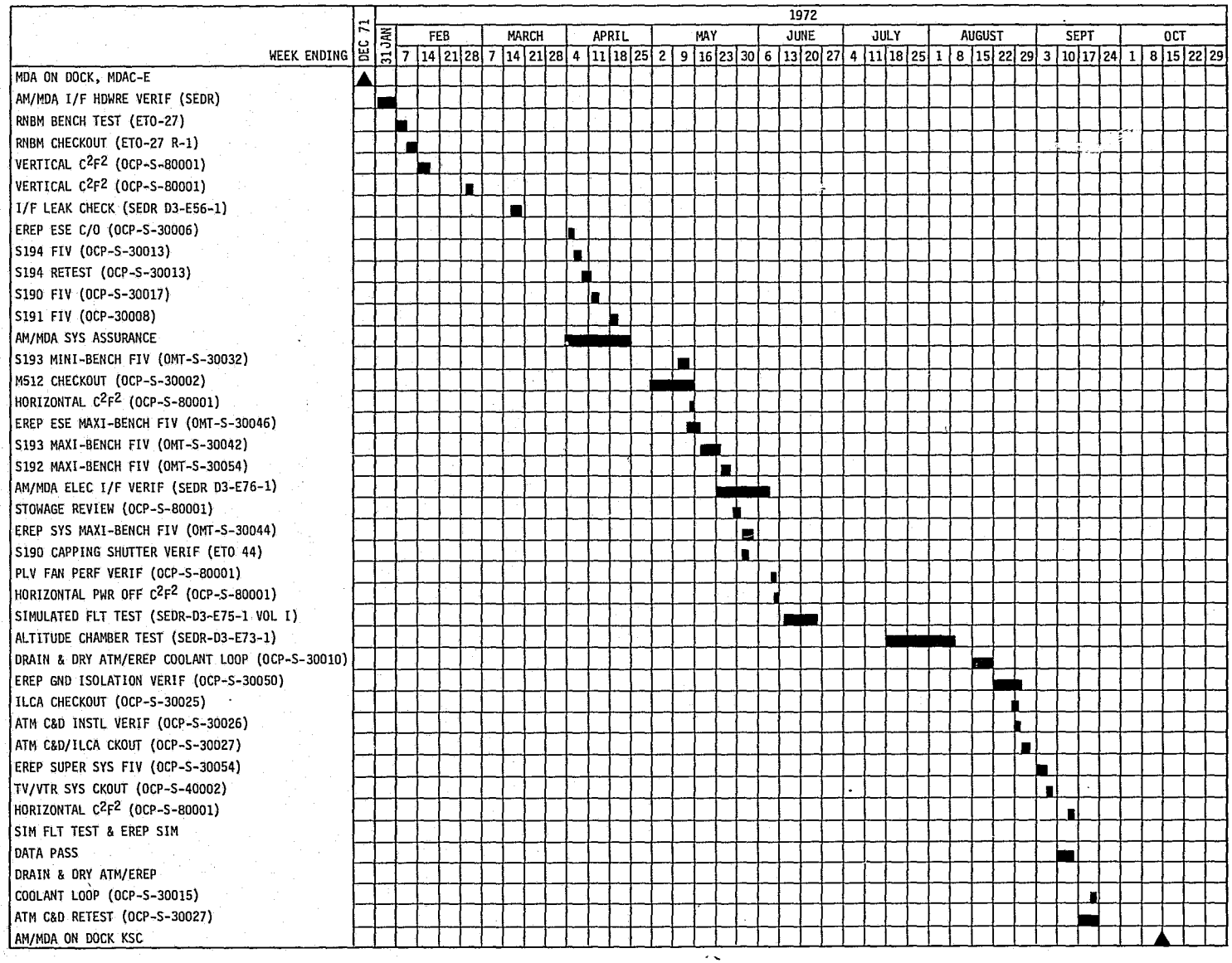

Figure 7.6-1 Flight Article-AM/MDA Integrated Test Activities at St. Louis

7.6.3.5 Radio Noise Burst Monitor (RNBM) (MDA-OCP-D-30021)

A. Test Objective - The test was performed to revalidate RNBM SN002 that had been returned to the vendor for rework.

B. Test Location - MDAC-E Building 66.

C. Test Configuration - The test was performed with RNBM SN002 installed in its flight position. The MDA was in the vertical position.

D. Test Summary - All test objectives were met.

7.6.3.6 S009 Functional Test (MDA-OCP-D-30003)

A. Test Objective - The test was run to satisfy re-test requirements following Denver testing.

B. Test Location - MDAC-E Building 66.

C. Test Configuration - The test was performed with the S009 installed in the MDA in its flight position. The MDA was in the vertical position.

D. Test Summary - The detector package latch was not fully open and stowed. It caught and tore the protective screen and stopped detector package movement. The test was re-run with the latch in the proper position and the test objectives were met. Screen damage was documented.

7.6.3.7 TV System Test (MDA-OCP-D-40002)

A. Test Objective - Reverification of a Video Switch that did not satisfactorily pass tests in Denver.

B. Test Location - MDAC-E Building 66

C. Test Configuration - The test was performed with hardware installed in the MDA. The MDA was in the vertical position.

D. Test Summary - Several problems were encountered, but were all identified as test equipment or test set-up errors. Errors were corrected and test objectives were met.

7.6.3.8 AM/MDA Interface Leak Test (SEDR-D3-E56-1)

A. Test Objectives - Verify the flow rate through branches of the insulation purge system and verify the leak rate of the mated AM/MDA.

B. Test Location - MDAC-E Building 66.

C. Test Configuration - The test was performed on the mated AM/MDA and was in the vertical position. Blank off kits were installed in place of S191 and S192 experiments.

D. Test Summary - The insulation purge system was successfully tested. Spacecraft leakage at the AM/MDA interface was excessive. MDAC reworked the interface, re-ran the test and the leak rate at the AM/MDA interface was brought within limits; however, since flight S191 and S192 hardware was not installed, the overall leak test requirements were deferred to KSC.

7.6.3.9 AM/MDA Systems Assurance Test (SEDR-D3-E72-1)

A. Test Objectives - Verify all integrated AM/MDA functions.

B. Test Location - MDAC-E Building 103

C. Test Configuration - This test was performed on the mated AM/MDA in a horizontal position.

D. Test Summary - All MDA test objectives and all requirements were satisfied as planned except those listed below:

(1) MDA Window Heater - The S190 window heater control box was not available for this test. Requirements were satisfied during the Simulated Flight Test, SEDR D3-E75-1 Vol. 1. (Ref. para. 7.6.3.16)

(2) Proton Spectrometer - The Proton Spectrometer failed to operate properly and was returned to the vendor for evaluation and modification. It was later tested and requirements were satisfied during the AM/MDA Electrical Interface Verification Test, SEDR D3-E76-1. (Ref. para. 7.6.3.13)

(3) RNBM - GSE available at the time of test could not generate usable input signals to the RNBM antenna. The requirements were later satisfied in the Simulated Flight Test, SEDR D3-E75-1 Vol. II (Ref.

para 7.6.3.16) and the ATM C&D Functional Verification Test, MDA-OCP-S-30027 (Ref. para. 7.6.3.22).

(4) ATM C&D Panel Light Intensity - Light levels were lower than specification values. It was decided that the flight crew would evaluate the lighting during the AM/MDA Electrical Interface Test, SEDR D3-E76-1 (Ref. para. 7.6.3.13).

7.6.3.10 EREP Checkout

EREP Support Equipment (ESE), S190, S191 and S194 were all tested, in their flight installed positions, as identified on the flow diagram, Figure 7.6-1. However, the EREP hardware was later removed from the MDA invalidating these on-module tests, and put through an integrated bench test. The bench test is discussed in section 7.3 of this report. EREP hardware was later reinstalled in the MDA and a SSFIV test was performed to satisfy test requirements. That test will be discussed later in this section.

7.6.3.11 M512 Functional Test (MDA-OCP-S-30002)

A. Test Objectives - Verify ground isolation, instrumentation, voltage and power, and leakage of the installed M512 facility and functionally verify the experiment's ability to perform assigned functions.

B. Test Location - MDAC-E Building 103

C. Test Configuration - This test was performed with the M512 installed and the AM/MDA horizontal.

D. Test Summary - Most test objectives were met. Flight film for the 16mm camera was not available and the flight crystal growth container was not available. Requirements involving those items were satisfied during the Simulated Flight Test (Ref. para. 7.6.3.16). The view mirror became coated when the Electron Beam (EB) Gun was fired. Recommendation was to clean the mirror for test and change before flight.

7.6.3.12 Crew Compartment Fit and Function (C^2F^2)(Horizontal) MDA-OCP-S-80001)

A. Test Objectives - Verify equipment stowed or installed so that crew members can readily and safely use it to accomplish mission objectives.

B. Test Location - MDAC-E Building 103

C. Test Configuration - Testing was performed with flight hardware (and "flight type" hardware) installed in flight locations. The AM/MDA was horizontal.

D. Test Summary - C^2F^2 testing with the AM/MDA horizontal was done incrementally as flight hardware became available on May 9, June 6, and September 7, 1972. Some non-flight hardware was used to verify stowage procedures. The only major problems encountered were caused by the use of non-flight hardware. The recommended solution was to perform the tests again when flight hardware became available (at KSC).

7.6.3.13 AM/MDA Electrical Interface Test (D3-E76-1)

A. Test Objectives - Validate AM/MDA systems that were not validated during the Systems Assurance Test.

B. Test Location - MDAC-E Building 103

C. Test Configuration - The test was performed with flight hardware installed and the AM/MDA horizontal.

D. Test Summary - The Proton Spectrometer data revealed that all digital outputs were high, and no tag bits were received. Investigation revealed an uncompatibility existed between the experiment and the spacecraft. The method of coupling the timing signal from the AM PCM interface to the Proton Spectrometer was corrected and the Proton Spectrometer was retested successfully.

Caution and Warning trip points were out of specification. The problem was traced to high frequency noise between structural and power returns to the instrumentation packages. Jumper plugs with capacitors were installed and the problem was resolved.

Other MDA test and retest objectives were satisfied without significant problems.

7.6.3.14 Flight Crew Equipment (FCE) Stowage and Configuration MDA-OCP-S-80003)

A. Test Objectives - Assure that FCE was stowed properly prior to Simulated Flight and Altitude Chamber Tests.

B. Test Location - MDAC-E Building 103

C. Test Configuration - This test was performed with the AM/MDA horizontal.

D. Test Summary - Equipment was stowed and all test objectives were met.

7.6.3.15 Performance Test of MDA Fan Assemblies (MDA-OCP-S-60005)

A. Test Objectives - Verify the performance of the MDA Cabin Fan and the CSM Port Fan.

B. Test Location - MDAC-E Building 103

C. Test Configuration - Fans installed in flight configuration. The AM/MDA was horizontal.

D. Test Summary - All test objectives were met. The fans performed as required.

7.6.3.16 Simulated Flight Test (SEDR-D3-E75-1, Vol. 1)

A. Test Objectives - Review and perform actual flight and mission operations to evaluate the adequacy of equipment and procedures and determine the EMI between installed systems. (EREP hardware was not available for this test.)

B. Test Location - MDAC-E Building 103

C. Test Configuration - The AM/MDA was horizontal and equipment was installed in its flight configuration.

D. Test Summary - All MDA test objectives were met. Some problems were encountered that were of a design or manufacturing nature, i.e., missing nomenclatures, misalignment of film vault doors, and loose connectors. All discrepancies of this kind were properly documented, and dispositioned.

The RNBM Test Objectives were met; however, the calibration potentiometer had to be rotated through its full travel to get readouts. The RNBM was returned to the vendor for failure analysis. Section 2.2.10 discusses the failure and refurbishment in more detail.

7.6.3.17 Altitude Chamber Test (SEDR-D3-E73-1)

A. Test Objective - Evaluate the AM/MDA design and function and the crew/hardware interface under simulated altitude conditions. Obtain leak test data for conversion factors.

B. Test Location - Altitude Chamber in MDAC-E Building 103

C. Test Configuration - The test was performed on the AM/MDA inside of the MDAC-E 30 foot diameter altitude chamber. EREP experiments were not installed. S009 and the M512 facility were the only experiments installed in the MDA.

D. Test Summary - The AM/MDA was first subjected to an unmanned cabin leak test at a simulated altitude of 150,000 feet. Leakage at altitude was 345 SCCM. The leak test was followed by an 84 hour outgassing test at altitude. An initial quick look and analysis of the gas sample data indicated that the level of contaminants was low, and the AM/MDA atmosphere was acceptable for human habitation.

Before the manned altitude test was conducted, a simulated manned altitude test (with the flight crew performing test functions) at ambient pressure was performed. This test at ambient pressure was performed to verify safety and emergency procedures, and to get a "crew evaluation" of test procedures. The test was satisfactorily completed, and crew recommended changes were made to the procedures.

The final test was at altitude (150,000 feet). Only two problems worth noting were detected in the MDA.

- Several MDA instrumentation parameters experienced up to 15 counts of noise at random intervals. The problem was documented and the system was considered satisfactory for flight.

- Mosites foam used in stowage containers expanded more than was expected and stowed items could not be easily removed. Stowage containers were redesigned and the problem was eliminated. All test objectives were met.

7.6.3.18 Leak Check of the ATM C&D/EREP Coolant Loop (MDA-OCP-S-30010, Applicable Portions)

A. Test Objectives - Verify that the Coolant Loop leak rate was within specification limits.

B. Test Location - MDAC-E Building 103

C. Test Configuration - The ATM C&D/EREP Coolant loop was installed in the MDA. The AM/MDA was horizontal.

D. Test Summary - Some fittings and connections had to be retorqued to bring the leak rate within specifications. All test objectives were met.

7.6.3.19 EREP Ground Isolation Verification (MDA-OCP-S-30050)

A. Test Objectives - Verify ground isolation and bonding of the EREP hardware, and perform S-191 cable confidence loop checks.

B. Test Location - MDAC-E Building 103

C. Test Configuration - The test was performed with all EREP hardware except the S193 installed in its flight location. S193 was installed on a GSE support structure and electrically connected to the horizontal AM/MDA.

D. Test Summary - All test objectives were met except the ground isolation of the S193 experiment. The out-of-tolerance condition was determined to be internal to the S193. The S193 was rejected for flight, but it was determined to be OK to use for additional testing at St. Louis.

7.6.3.20 I/LCA Functional Verification (MDA-OCP-S-30025)

A. Test Objectives - Verify functional interfaces and configure the ATM C&D/I/LCA for "down stream" testing (The I/LCA was not flight hardware, therefore, there was no intention to satisfy I/LCA acceptance test requirements.).

B. Test Location - MDAC-E Building 106

C. Test Configuration - The test was performed with the I-LCA Qualification Unit installed in the MDA. The AM/MDA was horizontal.

D. Test Summary - The "qual" I/LCA test objectives were accomplished. The unit was installed and functionally tested, and made ready to support "down stream" testing. I/LCA flight unit acceptance testing was deferred to KSC.

7.6.3.21 ATM C&D Installation Verification Test (MDA-OCP-S-30026)

A. Test Objective - Verify the installation of the ATM C&D in the MDA.

B. Test Location - MDAC-E Building 103

C. Test Configuration - The test was performed with the ATM C&D in its flight location and the AM/MDA horizontal.

D. Test Summary - All test objectives were met; however, some problems were encountered and resolved during the test. Problems of note were:

(1) An open circuit was discovered in the ATM C&D console. It was traced to a pin in the J2 connector of the Intensity Counter. The pin was straightened and the problem resolved.

(2) TV Monitor #2 did not operate satisfactorily and was returned to the vendor. The unit was returned to St. Louis, reinstalled, and successfully retested. NASA and MMC agreed that the unit was flight worthy, and it remained installed in the ATM C&D.

7.6.3.22 ATM C&D Functional Verification (MDA-OCP-S-30027)

A. Test Objectives - Verify ATM C&D functional interfaces with associated hardware, i.e., I/LCA & RNBM.

B. Test Location - MDAC-E Building 103

C. Test Configuration - The test was performed with the flight ATM C&D panels, flight RNBM and the qualification unit I/LCA installed in the horizontal spacecraft.

D. Test Summary - Problems encountered were all determined to be procedural. All test objectives were met.

7.6.3.23 EREP Super System Functional Interface Verification Test (SSFIV) (MDA-OCP-S-30054)

A. Test Objective - Verify all EREP experiments and support equipment were ready for flight.

B. Test Location - MDAC-E Building 103

C. Test Configuration - The test was run with EREP flight hardware installed in flight positions with the following exceptions: Tape Recorder #2 was a "qual" unit and the S193 was mounted on a GSE Support Structure.

D. Test Summary - The system was prepared for test. Delta temperature measurements were made across the C&D and tape recorders. Pyrotechnic and S193 switching circuits were tested. Several out of tolerance conditions were noted and dispositioned as OK for test with engineering evaluation to follow. The crew participated in the system preparation activities and made one significant comment. They found the S192 focus control difficult to adjust and lacking in accessibility.

After the system was prepared for test, three simulated data runs were made. Problems encountered during the data runs were caused by faulty GSE. The faulty GSE was either repaired at the time, substituted or dispositioned as OK to use "as-is" if repaired after test at St. Louis.

7.6.3.24 Simulated Flight Test (SEDR D3-E75-1, Vol. II & MDA-OCP-S-30018)

A. Test Objective - Verify functional compatibility between MDA systems; monitor conducted EMI on critical circuits during simulated flight and simulated EREP data pass operations, and evaluate system performance during a simulated EREP data pass with EMI measuring equipment removed and with the system subjected to radiated energy during test.

B. Test Location - MDAC-E Building 103

C. Test Configuration - This test was performed with EREP flight hardware installed in/on the MDA except S193 which was installed on a GSE fixture electrically mated to the AM/MDA. Two simulated date passes were run. EMI monitoring devices were installed in critical circuits for one data pass and were removed for the other.

D. Test Summary - Basic MDA system, i.e., ECS, electrical, etc., functioned normally. The following anomalies were experienced with EREP flight hardware:

(1) The S192 cooler motor would not change speed. The cooler was rejected, and run #1 proceeded without the cooler.

(2) An audible decrease in S190 shutter speed was detected. Test was continued without resolving the problem. Engineering evaluation was started.

(3) Data could not be stripped from track 1 of tape P122 from tape recorder #1. Trouble shooting revealed a defective cable. The cable was later reworked and tested at KSC.

(4) The S192 External Scanner Baffle Assembly became loose. Investigation disclosed that the assembly was broken and could not be repaired at St. Louis. The S192 experiment could continue with power on, but without the scanner motor running. Under these conditions, only S192 housekeeping data could be obtained. The S192 external scanner assembly was returned to the vendor.

(5) S193 data revealed anomalies in the Rad/Scat and altimeter modes. The problems were determined to be internal to the S193 and were referred to the vendor for further engineering evaluation.

(6) Several times during both runs, Status word "A" deviated from the normal pattern. Investigation revealed a problem in the EREP C&D panel. The problem was referred to the C&D panel vendor for evaluation.

Other problems encountered were caused by procedural errors or GSE inadequacies. There were no problems caused by EMI.

7.6.4 MDA Backup Article Acceptance Testing

7.6.4.1 Test Flow

Tests performed on the MDA Backup Article are shown on the flow diagram in Figure 7.6-2. The flow diagram identifies tests by title and procedure number. Dates the tests were performed are included.

7.6.4.2 AM/MDA Interface Leak Check Test (SEDR D3-E56-2)

A. Test Objectives - Verify the flow rate through branches of the insulation purge system and the leak rate of the mated AM/MDA.

B. Test Location - MDAC-E Building 66

C. Test Configuration - The test was performed on the mated AM/MDA in the vertical position. Blank-off kits were installed in place of the S191 and S192 EREP experiments.

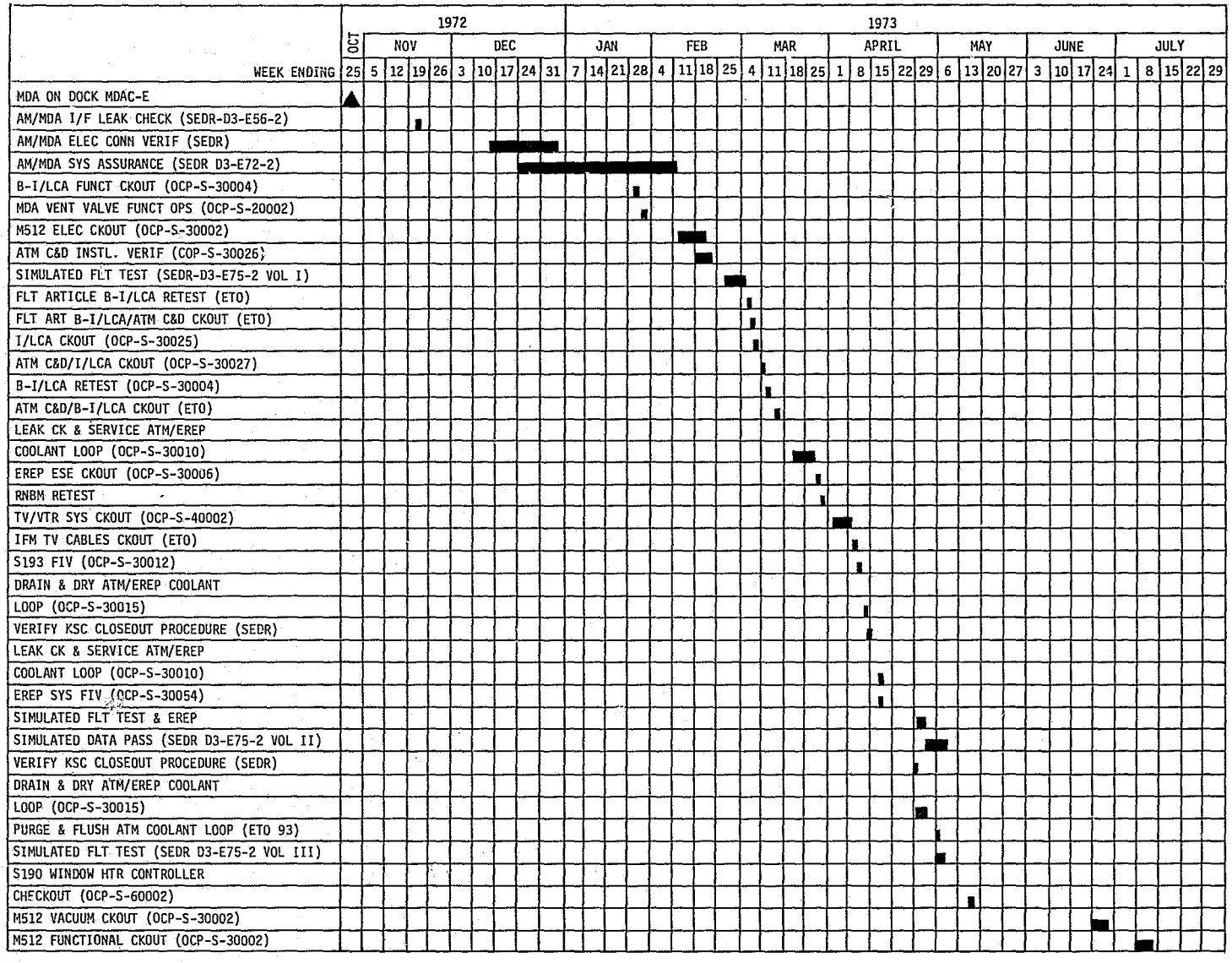

Figure 7.6-2 Backup Article-AM/MDA Integrated Test Activities at St. Louis

D. Test Summary - All test objectives were met. However, the combined leak rate was reverified after flight experiments S191 and S193 were installed.

7.6.4.3 AM/MDA Systems Assurance Test (SEDR-D3-E72-2)

A. Test Objectives - Verify integrated AM/MDA functions and functionally verify the Proton Spectrometer and RNBM equipment.

B. Test Location - MDAC-E Building 103

C. Test Configuration - This test was performed on the mated AM/MDA in the horizontal position.

D. Test Summary - The test verified MDA electrical, communication, caution and warning, and instrumentation systems of the functional operation of the RNBM, Proton Spectrometer and S009 experiments in the mated AM/MDA configuration. Most test objectives were met; however, the Proton Spectrometer Acceptance Test requirements were not satisfied due to GSE problems and interfacing the RNBM with the ATM C&D qualification panels. Also the RNBM functional test was not acceptable.

7.6.4.4 BI/LCA Functional Test (MDA-OCP-S-30004)

A. Test Objectives - Verify the installation and output of the BI/LCA.

B. Test Location - MDAC-E Building 103

C. Test Configuration - The test was performed with the BI-LCA installed in its flight location. The AM/MDA was horizontal.

D. Test Summary - All test objectives were met.

7.6.4.5 Vent Valve Operation and Leak Rate Verification Test (MDA-OCP-S-20002)

A. Test Objectives - Verify the functional operation and leak rate of the MDA Vent Valves.

B. Test Location - MDAC-E Building 103

C. Test Configuration - The test was performed with the Vent Valves installed. The AM/MDA was horizontal.

D. Test Summary - All test objectives were met.

7.6.4.6 M512 Functional Tests (MDA-OCP-S-30002)

A. Test Objectives - Verify the installation of the M512 facility and functionally verify related experiment tasks.

B. Test Location - MDAC-E Building 103

C. Test Configuration - The test was performed with the M512 equipment installed. The AM/MDA was horizontal.

D. Test Summary - Because all M512 GSE was not available in St. Louis until after SL-1 was launched, this test was performed in three stages on 2/7-13, 6/25-29, and 7/9-7/13, 1973. All but one problem encountered during test were due to procedural or test "hook-up" errors. The 75mm lens used with the DAC was broken, however, it was used to support testing and was then sent back to the vendor for rework. This did not affect test results and all test objectives were met.

7.6.4.7 ATM C&D Installation Verification (MDA-OCP-S-30026)

A. Test Objectives - Evaluate the readiness of the Qual hardware to support other tests (No acceptance test requirements were intended to be satisfied.)

B. Test Location - MDAC-E Building 103

C. Test Configuration - This test was performed on ATM C&D Qualification Test Panels installed in the ATM C&D structure in the MDA. The AM/MDA was horizontal.

D. Test Summary - Test objectives were met and the ATM C&D with Qual panels installed was determined to be ready to support downstream testing. The following hardware discrepancies were noted and dispositioned "OK to use 'as-is'."

- A faulty intensity counter gave random readouts.
- A faulty image modulation assembly gave wrong voltage output.

7.6.4.8 Simulated Flight Test (SEDR-D3-E75-2, Vol I)

A. Test Objectives - Review and perform actual flight and mission operations, to evaluate the adequacy of installed equipment, procedures and to determine the functional compatibility of flight hardware. EREP hardware was not installed for this test.

B. Test Location - MDAC-E Building 103

C. Test Configuration - The S009 experiment, M512 facility, BI/LCA, ATM C&D (with "Qualification" panels), and Proton Spectrometer were installed in the AM/MDA. The M512 GSE Vacuum Source was not available. No EREP hardware was available.

D. Test Summary - The test verified functional interfaces of systems tested. Several MDA electrical system test requirements were satisfied and the MDA vent valve closing time was verified. All test objectives were met.

7.6.4.9 I/LCA Functional Test (MDA-OCP-S-30025)

A. Test Objectives - Verify the installation and functional operation of the I-LCA.

B. Test Location - MDAC-E Building 103

C. Test Configuration - The test was performed with the I/LCA installed on the horizontal AM/MDA.

D. Test Summary - The test progressed as planned. All test objectives were met.

7.6.4.10 ATM C&D Functional Verification (MDA-OCP-S-30027)

A. Test Objectives - Verify ATM C&D functional interfaces with associated hardware, i.e., I/LCA and RNBM ("system readiness" to support downstream MDA Backup and Mission Support testing).

B. Test Location - MDAC-E Building 103

C. Test Configuration - The test was performed with "Qual" ATM C&D panels installed in the MDA. The AM/MDA was horizontal.

D. Test Summary - All test objectives were met. One hardware discrepancy was noted, i.e., a bad relay in the ATM C&D panel prevented the RNBM Solar flare alert audible signal from reaching the speaker.

7.6.4.11 Leak Check Delta Pressure and Flow Test of the ATM C&D/EREP Coolant (MDA-OCP-S-30010)

A. Test Objective - Verify that the coolant loop leak rate, delta pressure and flow rate were within specification limits.

B. Test Location - MDAC-E Building 103

C. Test Configuration - The test was performed with the ATM C&D panels and EREP hardware installed in the MDA. GSE tooling was used to substitute for Tape Recorder #2 and S192.

D. Test Summary - The method used for testing S192 and T/R #2 joints and T/R #1 flex lines was temporarily changed from vacuum to pressure because the simulator hoses were too permeable for vacuum testing. Coolant had to be changed and the system flushed because water initially introduced into the system was contaminated. The system was suitable for EREP testing but acceptance test requirements were not satisfied.

7.6.4.12 TV/VTR System Functional Test (MDA-OCP-S-40002)

A. Test Objectives - Verify the installation of the VTR and the functioning of the TV & VTR systems.

B. Test Location - MDAC-E Building 103

C. Test Configuration - The test was performed on flight hardware installed in the MDA. The AM/MDA was horizontal.

D. Test Summary - All test objectives were met. Anomalies experienced during test were mainly due to procedural or operational errors. One anomaly was due to a faulty video switch. The switch was replaced and the test was successfully completed.

7.6.4.13 EREP Testing; EREP ESE Checkout (ETO MDA/SL/BU/81); S193 Experiment Checkout (ETO MDA/SL/BU/82), and EREP Expanded Systems Test (ETO MDA/SL/BU/83)

A. Test Objectives - Verify the functional capability of EREP hardware installed in the MDA prior to the Simulated Flight Test.

B. Test Location - MDAC-E Building 103

C. Test Configuration - The S190, S191, S192 and S194 experiments, T/R #1, and C&D panel were installed in the MDA. S193 was installed on a GSE support fixture and electrically mated to the MDA. T/R #2 was not available for test. EREP hardware was installed to facilitate later removal, i.e., seals were omitted, windows were not mapped, only enough mounting bolts were used to assure personnel safety.

D. Test Summary - The EREP ESE checkout proved that the support equipment was ready to support experiment testing. No equipment anomalies were detected.

The S193 experiment was tested separately because of its complexity. The test was run to verify installation and to evaluate the capability of the experiment to function during Expanded Systems Tests. The test was performed without major problems. Procedural errors were corrected, and equipment adjustments were made. Test objectives were met.

The Expanded EREP Systems Test was performed to verify EREP functional interfaces. All experiments were functionally tested and met test objectives with the exception that C-2 and C-3 S192 monitors were out of tolerance (dispositioned OK for test). The EREP Hardware was ready to support Sim Flight Test.

7.6.4.14 Simulated Flight Test & EREP Simulated Data Pass (SEDR-D3-E74-2 Vol. II)

A. Test Objectives - Evaluate the functional compatibility of installed systems during an abbreviated mission time line and an EREP data pass. NOTE: There was no intention to satisfy EREP test requirements.

B. Test Location - MDAC-E Building 103

C. Test Configuration - The test was performed on hardware installed in the AM/MDA. EREP hardware that was installed and tested per paragraph 7.6.4.13 remained installed for this test.

D. Test Summary - This test was a sequel to SIMULATED FLIGHT TEST, VOLUME I. It was used to validate hardware that was not installed or validated in SIM FLT VOL. I. The primary reason for running this test was to perform an EREP Simulated Data Pass and to evaluate functional compatibility of installed hardware. No EREP acceptance test requirements were satisfied. The EREP Data Pass procedure was performed per MMC procedure MDA-OCP-S-30018 which was made a part of E75-2, Vol. II. The Sim Data pass was run and data were recorded. The data tape was reviewed in St. Louis only to the extent necessary to verify that data were on the tapes. The tapes were then sent to KSC for data reduction. Reduced data were evaluated by EREP experiment PIEs. The data were not evaluated to accept the hardware for flight, but to verify that the EREP hardware could be used to support SL missions. Immediately after this test was complete, and before reduced data were evaluated, EREP hardware was removed from the

MDA and shipped to MMC-Denver, where it was set up in a bench configuration to support SL missions.

All test objectives were accomplished.

7.6.4.15 Simulated Flight Test (SEDR-D3-E75-2 Vol. III)

A. Test Objectives - Revalidate remaining AM/MDA systems after removal of EREP hardware.

B. Test Location - MDAC-E Building 103

C. Test Configuration - The test was performed on the AM/MDA. EREP hardware was not installed.

D. Test Summary - Test objectives were met.

7.6.4.16 S190 Window Heater Controller System Verification (MDA-OCP-S-60002)

A. Test Objectives - Verify that the S190 Window Heater Controller would satisfy functional requirements after installation in the MDA.

B. Test Location - MDAC-E Building 103

C. Test Configuration - The test was performed on the flight S190 Window Heater Controller installed in the MDA. The AM/MDA was horizontal.

D. Test Summary - All test objectives were met.

7.6.5 Testing on the Backup MDA at St. Louis to Support the MDA Flight Article at KSC Prior to Launch

7.6.5.1 TV Contingency Cable Test(ETO MDA/SL/BU/78)

This test was performed to verify fit and function of contingency cables in their operating locations and to verify proposed stowage procedures and location in the MDA. All test objectives were met.

7.6.5.2 BI/LCA/ATM C&D Console Functional Verification(ETOs MDA/SL/BU/79, 80, 84, 89, and 90)

The tests were performed to verify proper BI/LCA functioning with a modified auto-transformer and modified "over-voltage"

protection patch plugs to keep over-voltage spikes from destroying ATM C&D panel lights.

A. ETO 79 verified BI/LCA functions with the new auto-transformer and plugs for SL-1 flight hardware.

B. ETO 80 was a re-run of ETO 79 with a new auto-transformer and patch plugs for the Backup MDA.

C. ETO 84 was a re-run of ETO 80 to verify another set of plugs for the Backup MDA when the set verified in ETO 80 was assigned to SL-1 as flight spares.

D. ETO 89 was run to gather engineering data for design of "over-voltage" patch plugs because the design verified by ETOs 79 and 80 was not adequate when installed in SL-1 at KSC.

E. ETO 90 verified the new design that was accepted for flight.

7.6.5.3 EREP Diagnostic Downlink Unit (EDDU) Functional Verification Test (ETO MDA/SL/BU/85)

The EDDU, which provided a means of downlinking EREP data to the ground over the S-Band link, was introduced into the SL program and two units were built. One was intended as a primary flight unit and one as a spare. Both units were functionally tested in the Backup MDA and then sent to KSC for installation in SL-1. The test was successfully completed and all objectives were met.

7.6.5.4 S190 Window Frame Screws Torque (ETO MDA/SL/BU/86

Vendor engineering drawings did not specify torque values for two screws that retain an S190 heater and sensor feed through wires sealing plate. This test was run to determine if standard shop practices that require all screws to be tight were adhered to, and to establish a procedure for performing a similar test at KSC on the Flight Article without invalidating system integrity. The test successfully established a procedure for testing at KSC and proved that the easily reached screw was torqued to at least 20 inch-pounds which was above the 17 inch-pounds that was considered adequate.

7.6.5.5 EREP Coolant Loop Evaluation Tests (ETO's MDA/SL/BU/92 and 93)

This test was performed to assist KSC in evaluating a coolant loop contamination problem that was detected on the Flight MDA. Water was gravity fed through the EREP T/R per ETO 92 and through the complete ATM C&D/EREP Coolant Loop per ETO 93. PH data was gathered and sent to KSC for evaluation.

7.7 INTEGRATED VEHICLE TESTING - KSC

7.7.1 Introduction

The intent of this section is to present a test flow for the MDA through the KSC test program including a general test description of the major tests which were performed. Detailed test information may be found in the SWS Test and Checkout Plan (KSC-KS-2001). Specific test requirements for the MDA KSC testing are contained in the Test and Checkout Requirements, Specifications and Criteria at KSC (TCRSD) for AM/MDA (MDC E0122), and Skylab Integrated systems Test Checkout Requirements and Specifications (TM-012-003-2H). An Overall Chronological Summary is presented in Section 2.1 of this document.

The Inflight Maintenance Spares were tested to the same specifications and criteria as the flight unit. Test and Checkout Procedure (TCP) KS-2009 defined the spares test program for KSC.

Specific test requirements that were planned for a particular TCP and deferred to a subsequent TCP will not be identified in this report. This information is available in KSC-KS-2001.

7.7.2 Test Flow

Test flow operations for each location is detailed in the following:

- Figure 7.7 -1 depicts the flow at the Operations and Checkout (O&C) Building.
- Figure 7.7 -2 depicts the activity in the Vehicle Assembly Building (VAB).

These figures identify only those tests involving the AM/MDA modules. A flow for the Launch Pad is not included in that

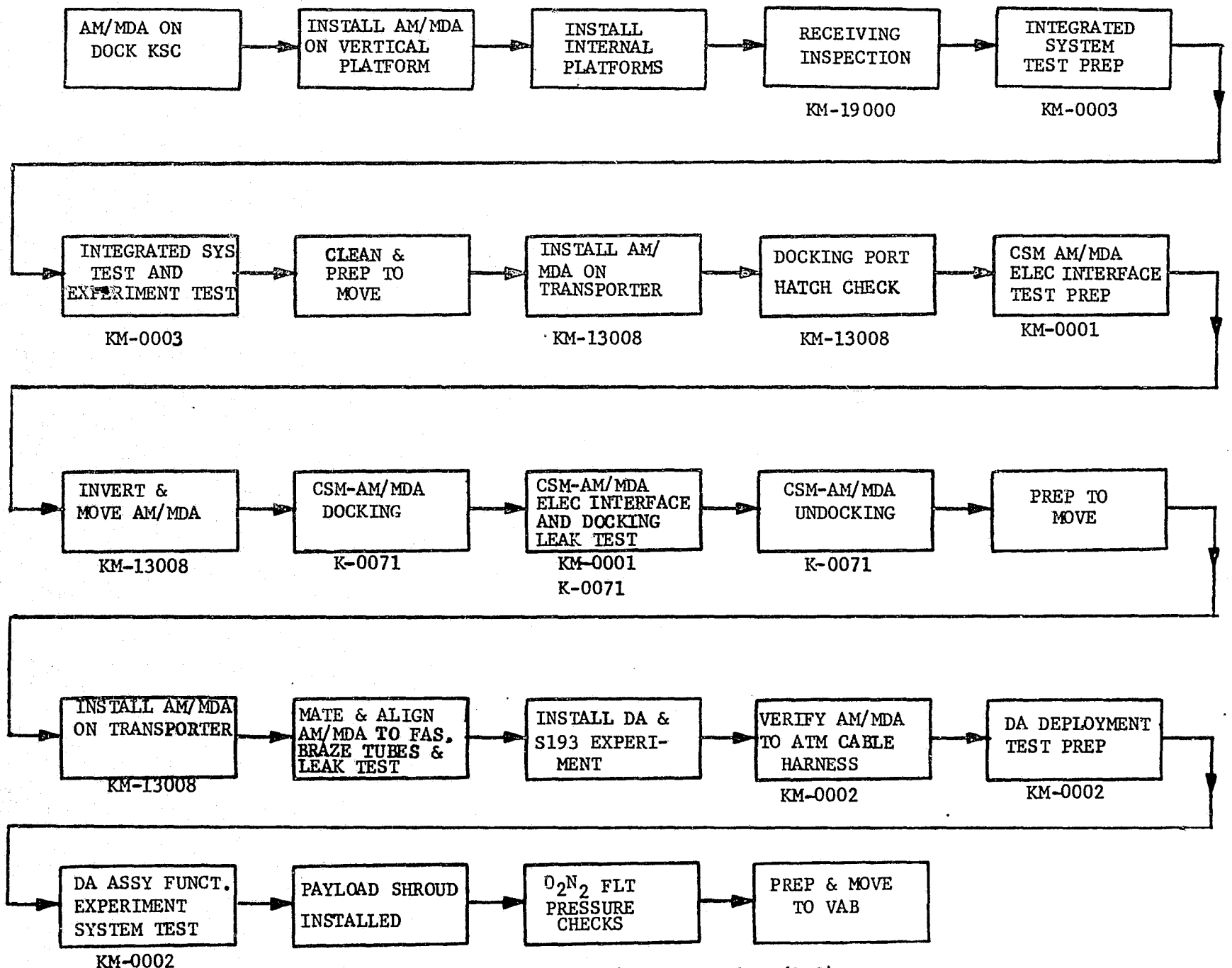

Figure 7.7-1 KSC-AM/MDA Test Flow (O&C)

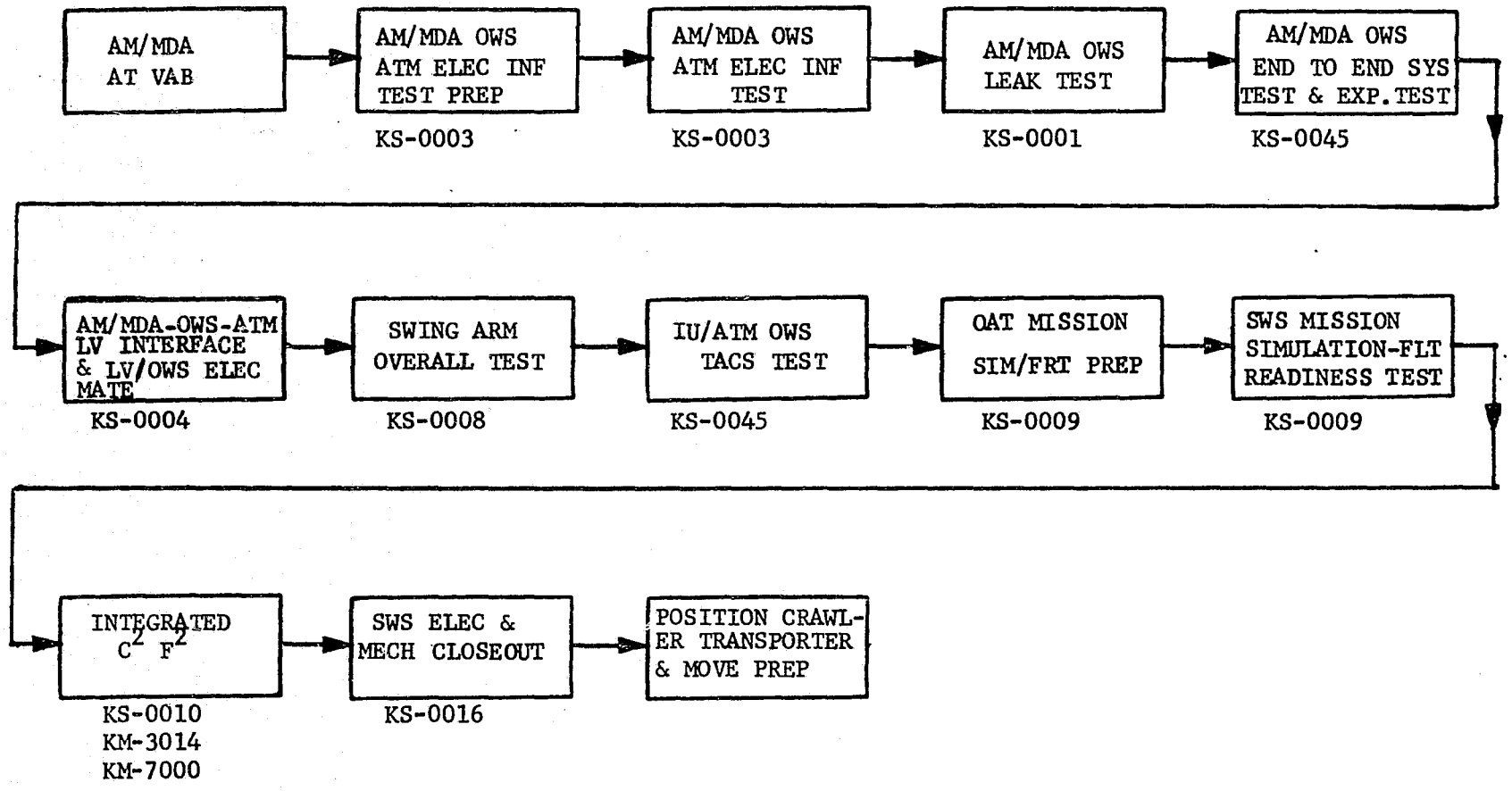
AM/MDA AT VAB
AM/MDA OWS ATM ELEC INF TEST PREP
KS-0003
AM/MDA OWS ATM ELEC INF TEST
KS-0003
AM/MDA OWS LEAK TEST
KS-0001
AM/MDA OWS END TO END SYS TEST & EXP. TEST
KS-0045
AM/MDA-OWS-ATM LV INTERFACE & LV/OWS ELEC MATE
KS-0004
SWING ARM OVERALL TEST
KS-0008
IU/ATM OWS TACS TEST
KS-0045
OAT MISSION SIM/FRT PREP
KS-0009
SWS MISSION SIMULATION-FLT READINESS TEST
KS-0009
INTEGRATED C2 F2
KS-0010
KM-3014
KM-7000
SWS ELEC & MECH CLOSEOUT
KS-0016
POSITION CRAWLER TRANSPORTER & MOVE PREP

this activity contained only the Countdown Demonstration Test (CDDT) and the Count (CD).

7.7.3 Test Description

The following pages present the test descriptions by Test and Checkout Procedure Number in sequential order as indicated in the flow charts, Figures 7.7.-1 and 7.7.-2. These descriptions are written only for those TCPs that satisfy test requirements as stated in the AM/MDA TCRSD (E0122) and the Integrated TCRSD (TM-012-003-2H). See Figure 7.7-3 for AM/MDA KSC Schedule.

7.7.4 AM/MDA Receiving Inspection (KM 19000)

7.7.4.1 Test Objectives

Receive and inspect all visible surfaces to verify that the MDA and its equipment installed, or shipped loose, was free from damage.

7.7.4.2 Test Location

O&C Building

7.7.4.3 Documents Used to Develop this TCP

- Skylab Operations Handbook, Volume I and II, MSC 04727
- Experiment Operations Handbook, Volume I and II, MSC 00924

7.7.4.4 Test Configuration

The AM/MDA was installed in the West Integrated Test Stand (WITS), and configured to permit the required inspection.

7.7.4.5 Test Summary

The receiving and inspection was performed in all designated areas and zones of the MDA with no major problems. The "ship loose" items were also inspected with no problems. The data package was reviewed and inventoried and found to be complete with the exception of minor problems (Reference paragraph 4.11.3).

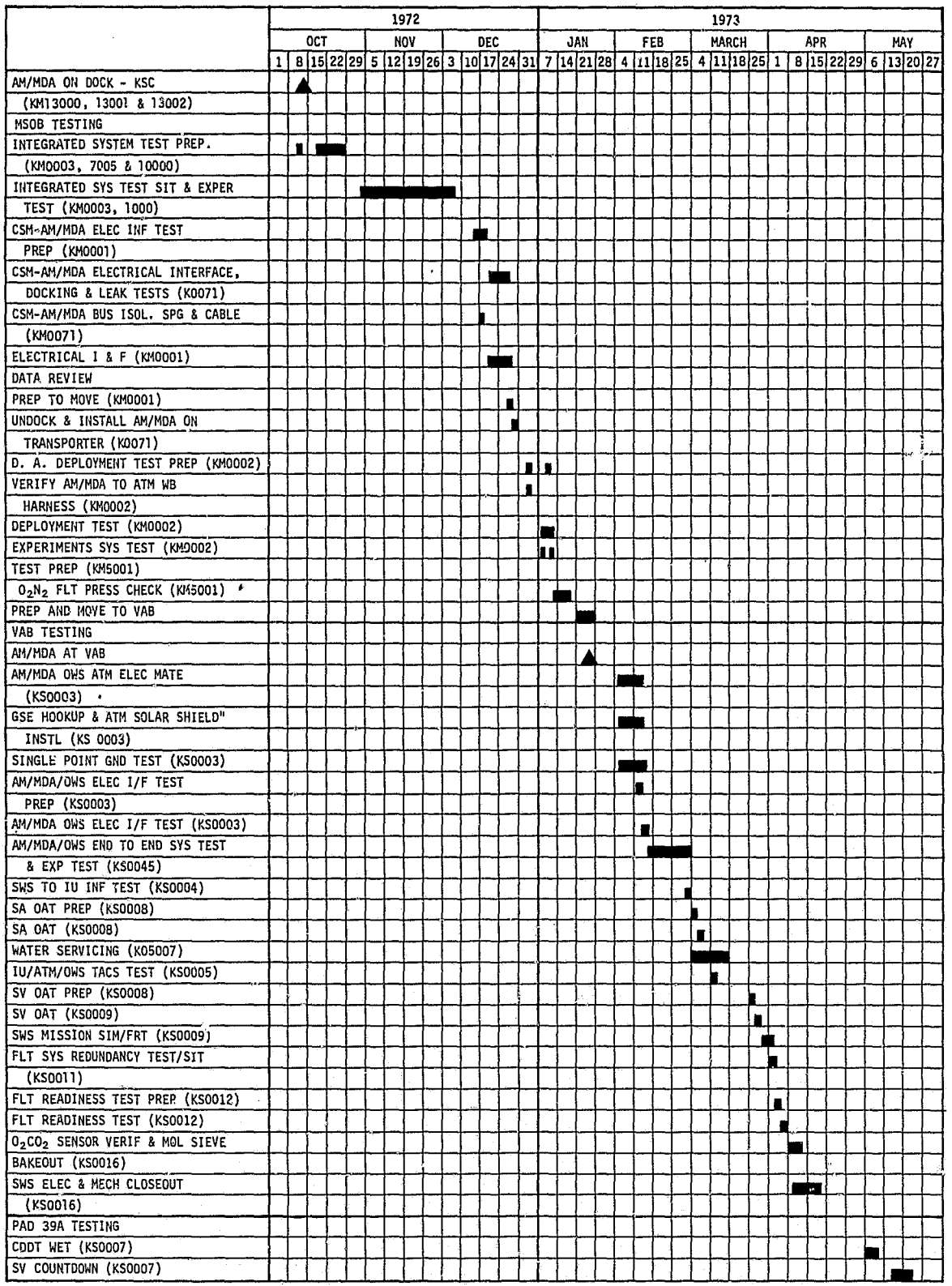

Figure 7.7-3 AM/MDA KSC Test Schedule

7.7.5 AM/MDA Integrated System Test and Experiment System Test (KM-0003)

7.7.5.1 Test Objectives

A. Electrical System - Functional verification of Electrical System including the following:

- Power Distribution - AM - CSM (Simulator)
- Utility Outlets and Control
- Interior Lighting and Control
- Exterior Lighting and Control
- Wall and Docking Port Heaters and Control Systems
- S190 Window Heaters and Control System
- Running Light Operation

B. Communications/Instrumentation/Television and Caution and Warning (COMM/INSTR/TV and C&W) - Functional Verification of Communication/TV System including:

- Speaker Intercom Assembly Operation
- Crew Communication Umbilical Functional Operation
- TV Input Station Operation
- Determination by Quantitative Measurements that the Instrumentation System and TV Systems performed within specified tolerances.
- Temperature Transducer Operation
- Signal Conditioner Operation
- Pressure Sensor Functional
- MDA Fire Detector Sensor Operation
- MDA Emergency Light Operation

C. Structures/Mechanical/ECS -

(1) Functional verification of Structural/Mechanical/ECS including:

- MDA Window Cover Operating Torques
- MDA Docking Port and Radial Hatch Actuation Forces
- MDA Axial Docking Target Alignment
- MDA Cabin Fans and Diffuser Operation
- CSM Port Fan Operation Using Normal and Spare Electrical Connectors
- MDA Window and Insulation Purge System Operation
- Operation and Accuracy of Docking Port Hatch (Axial and Radial) Delta Pressure Gauges

(2) Leak checks of the following:

- MDA Docking Port Hatches and Pressure Equalization Valves
- Window Mechanism
- Vent Plug and Manifold
- All AM/MDA Compartments Common
- MDA/STS Compartment

D. Experiments -

(1) M512 - Materials Processing in Space and Associated Experiments including:

- Verify power distribution and regulation
- Verify instrumentation system
- Functionally verify M512 facility and experiments M479 and M551 thru M555 interfaces

- Functionally verify integrity of lines and valves with vacuum and pressure test.

- Operate the electron beam gun into a dummy welding sample

(2) S009 - Nuclear Emulsion -

- Functionally verify experiment housing operation with detector package

(3) Radio Noise Burst Monitor (RNBM) -

- Functionally verify electrical interface with ATM

- Verify no degradation in the antenna and coax system

- Verify operation of flight and spare unit

(4) Proton Spectrometer -

- Verify ground and isolation

- Verify temperature transducer operation

- Verify functional operation

(5) Earth Resource Experiment Package (EREP) -

(a) S190 - Multispectral Photographic Facility-

- Operate the MDA S190 window cover

- Verify the S190 Camera operation

- Verify the S190 C&D Panel controls

- Verify light leaks and fogging

- Accumulate PCM data and display at the Quick Look Data Station (QLDS)

(b) S191 - Infrared Spectrometer -

- Verify the V/TS operation
- Verify cooler/dewar operation, calibration/reference thermal source intensity selection and auto calibration
- Verify DAC photographic capability, telescope/cavity pressure and external source calibration
- Accumulate PCM data and display at the QLDS

(c) S192 - Multispectral Scanner -

- Operate S192 door
- Verify internal optics alignment on the primary and secondary detectors
- Verify both detectors in the check and ready mode
- Verify flight scan motor and one shot actuator circuit operation
- Accumulate PCM data and display at the QLDS

(d) S194 - L-Band Radiometer -

- Verify S194 in the manual and auto A calibration modes
- Verify end-to-end system operation
- Display PCM data at the QLDS

(e) EREP Support Equipment -

- Verify EREP C&D Panel indicators
- Verify Primary and Secondary tape recorders bit error and diagnostic capability at 7.5 and 60 IPS
- Verify Voltage Controlled Oscillator (VCO) center frequencies and deviation.

(f) EREP Simulated Data Pass -

- Verify EREP Sensor operation and systems compatibility under "on orbit" conditions with the support equipment and data stations

- Record data on the FR 1928 Recorder

- Display S190, S193 and S194 sensor data at the QLDS

- Display selected data from the S191 and S192 sensors at the General Purpose Lab

- Operate the S193 altimeter in Nadir Align, Mode 5, Mode 3, Radiometer/Scatterometer (RAD/SCAT), In Track Non Contiguous (ITNC), and Cross Track Contiguous (CTC) with Single Point Temperature Reference (SPTR).

- Record data on the primary tape recorder

- Record data from S192 for a minimum of four minutes

- Bring all EREP sensors to the Ready Mode and operate the S193 in Altimeter Reset, Nadir align, Mode 5, and Mode 3 configurations

7.7.5.2 Test Location

O&C Building

7.7.5.3 Documents Used to Develop this TCP

- Test and Checkout Requirements Specification and Criteria at KSC for AM/MDS, MDC-E0122

- Skylab Integrated System Test Checkout Requirements and Specifications, TM-012-003-2H

7.7.5.4 Test Configuration

- MDA axial and radial port hatches open with protective sleeves installed

- MDA internal access platforms and ladder installed
- MDA test lighting fixture installed
- MDA window internal and external protective covers installed
- Proton Spectrometer located on 28 ft level WITS
- S193 and S194 Experiments on 28 ft work platform and electrically mated by GSE cables

7.7.5.5 Test Summary

This test was the first major AM/MDA test and checkout procedure performed at KSC. There were many deviations written to correct procedural errors and to facilitate out of sequence testing. This TCP was the first attempt to test EREP on-module after St. Louis testing and some modification to most other experiments. Problem areas were as follows:

A. Electrical -

(1) MDA wall heater 45°F thermostat verifications were not performed and were deferred to TCP KM-0002.

(2) The docking port heater control thermostat failed to close and was replaced. The failed unit was sent to Denver for failure analysis. Retest was deferred to KM-0002.

(3) S190 window heater verification was not performed because the control box was not installed. This test was deferred to KS-0045.

B. Comm/Instr/TV and C&W -

(1) TV bus shield was improperly grounded. Problem was corrected and retested in a deviation to the TCP.

(2) TV signal was not received at the TV output rack. A faulty connector pin was replaced and system retested.

(3) Communication tunnel connector was found to be intermittent. The connector was replaced and retested.

(4) Temperature sensor circuits failed and sensor was replaced. Retest was deferred to KS-0045.

(5) The MDA signal conditioner was found to be discrepant. The unit was removed and sent to Denver for failure analysis. A replacement unit was installed and retest deferred to KS-0045.

(6) Inverter Lighting Control Assembly (I/LCA) temperature sensor was not installed. Test was deferred to KM0002.

C. Structures/Mechanical/ECS - Radial and Axial Hatch Delta P gauges tests were performed off-module to provide accuracy in the one-G environment.

D. Experiments -

(1) M512 - Materials Processing in Space and Associated Experiments:

(a) Flammability (M479) did not operate due to improper operation of timer sequencer.

(b) Temperature and voltage indications were out of tolerance.

(c) Data Acquisition Camera (DAC) shutter would not open due to interference with borescope.

(d) Sphere forming verification test was unacceptable because the electron beam current could not be controlled consistently and the target was misaligned.

Note: Testing of the M512 was deferred to subsequent TCP due to AM/MDA pressurization.

(2) RNBM - No problems

(3) S009 - Detector package did not open completely due to interference with debris shield. The

shield was modified to allow package operation.

(4) Proton Spectrometer - The Ground Support Equipment (GSE) was incompatible with the Proton Spectrometer. Test was deferred to a subsequent TCP.

(5) S190 -

(a) No S190 window heater verification as window heater control box was not installed. Deferred to KS-0045

(b) Spare magazine drive assembly ran continuously.

(c) Incorrect data printouts

(d) Scratches and streaks on film

(e) Film skewing on stations 1 and 3

(f) Experiment reworked for KM-0001

(6) S191 -

(a) Data would not play through QLDS

(b) Dewar pressure momentarily out of specifications

(c) Alignment dot improperly located on telescope port

(d) Excessive drift during telescope alignment

(e) Experiment reworked for KM-0001

(7) S192 -

(a) Could not achieve detector cooldown

(b) Could not obtain sync on data

(c) No data on tracks 1, 7 and 21 due to intermittent contact in C&D Panel

(d) Experiment would not power-up due to breakdown box

(e) Scan motor stopped before shutoff.

(f) Experiment reworked prior to KM-0002.

(8) S193 - Satisfactory ground check off-module.

(9) S194 - Satisfactory operation off-module.

7.7.6 AM/MDA Moves and Preps for Docking Test (KM-13008)

7.7.6.1 Test Objectives

- Prepare and pressurize AM/MDA
- Reconfigure the AM/MDA during controlled portions of the docking test operations.
- Perform axial hatch force test.

7.7.6.2 Test Location

O&C Building

7.7.6.3 Documents Used to Develop this TCP

- Test and Checkout Requirements, Specifications and Criteria - MDC E0122

7.7.6.4 Test Configuration

- AM/MDA powered down
- AM/MDA installed on horizontal trailer
- Axial and Radial Docking Port Hatches installed

7.7.6.5 Test Summary

The axial hatch force test was performed after the AM/MDA was positioned on the horizontal trailer. It was then lifted from the transporter, inverted and leveled using the axial docking port interface as a reference. After docking preparations were completed, the AM/MDA was moved to the WITS and lowered above the CSM. The AM/MDA was reinstalled on the horizontal transporter after docking and interface compatibility tests were completed.

7.7.7 CM-AM/MDA Mechanical Docking Test (K-0071)

7.7.7.1 Test Objectives

- Verify docking capability of the CSM to MDA port 5 (axial) with and without the docking latch inhibitor ring installed.
- Verify the CSM-AM/MDA docking interface seal leak rate.
- Verify the CSM-AM/MDA COAS/docking target alignment at Port 5 (axial).
- Verify Air Interchange Duct (AID) and Contingency Power cable fit between the MDA and the CSM.
- Verify electrical bonding between CSM and AM/MDA.

7.7.7.2 Test Location

O&C Building (WITS)

7.7.7.3 Documents Used to Develop this TCP

- Test and Checkout Requirements, Specifications and Criteria MDC-E0122
- Systems Composite Mechanical Schematics 10M30899
- AM/MDA Mechanical ICD 13M02521
- Skylab (AM/MDA/ATM) O&C Mechanical System Requirements 66ICDSO-42
- CSM to MDA Physical Requirements 13M20979
- Skylab Integrated System Test Checkout Requirements and Specifications TM012-003-2H

7.7.7.4 Test Configuration

- CSM installed in WITS
- AM/MDA suspended inverted over CSM
- AM/MDA pressurized

- AM/MDA powered down
- MDA Port 5 (axial) docking target installed

7.7.7.5 Test Summary

The docking operations were performed with no problems and all test objectives were accomplished. The astronauts were involved to a great extent in this test and were instrumental in its success.

7.7.8 CSM-AM/MDA Electrical Interface Test (KM-0001)

7.7.8.1 Test Objectives

A. Functionally verify the AM/MDA-CSM electrical interface compatibility including:

- Power Systems
- Caution and Warning
- Television
- Communications

B. Functionally verify AM/MDA flight systems compatibility with CSM in quiescent mode including:

- Power Systems
- Caution and Warning
- Television
- Communications
- ECS
- Experiments

7.7.8.2 Test Location

O&C Building (WITS)

7.7.8.3 Documents Used to Develop this TCP

- Test and Checkout Requirements and Specifications MDC-E0122

- Skylab Integrated System Test and Checkout Requirements and Specifications TM012-003-2H

7.7.8.4 Test Configuration

- CSM installed in WITS

- AM/MDA mechanical structurally and electrically mated to CSM

- AM/MDA stabilization kit installed

- AM/MDA internal platforms installed

- AM/MDA hatches open and protective covers installed

- GSE cables mated to AM/MDA

- S193 and S194 EREP experiment located on 28 ft level work platform and electrically connected to spacecraft by GSE cables

7.7.8.5 Test Summary

This test successfully demonstrated the AM/MDA-CSM interface and verified S190, S191, S193, and S194 compabitility in an MDA/CSM docked configuration. This TCP worked the Sim Data Pass procedure with available experiments even though all performance problems were not worked off. Hardware/Systems operated during this TCP were as follows:

A. Electrical

B. Comm/Instr/TV and C&W

C. Structural/Mechanical/ECS

D. Experiments

(1) M512

(2) S009

(3) RNBM

(4) Proton Spectrometer

(5) EREP S190

(6) EREP S194

(7) EREP S192

This experiment was not operated as planned. It was being reworked.

(8) EREP S193

- S193 tracking loop caused altimeter abort. Experiment reworked for KM-0002.
- Data Acquisition Camera (DAC) stopped before shut off.
- Timing Problem

(9) EREP S194

7.7.9 Deployment Assembly Functional and Experiments System Test (KM-0002)

7.7.9.1 Test Objectives

A. Perform operational checkout of Earth Resources Experiment Package (EREP) with all sensors electrically and mechanically mated.

B. Verify installation and electrical resistance of I/LCA heater circuits.

C. Functionally verify BI/LCA continuity, interface and controls.

D. Functionally verify integrity of the ATM TV cable.

E. Functionally verify the Proton Spectrometer including:

- Operation

- Interface with AM Telemetry system
- QLDS Program

F. Verify Radial Docking Target Alignment

7.7.9.2 Test Location

O&C Building (WITS)

7.7.9.3 Documents Used to Develop this TCP

- Test and Checkout Requirements, Specifications and Criteria MDC-E0122

7.7.9.4 Test Configuration

- All EREP sensors were electrically and mechanically mated
- L-Band Truss installed
- S193 and S194 Experiment Test Set connected

7.7.9.5 Test Summary

This test was the first test performed utilizing the flight ATM cables. Several deviations were required to incorporate retest into the TCP. The following hardware/systems were operated:

A. Electrical - MDA wall heater 45°F thermostats and docking port heater, control thermostat, and overtemp switch were successfully tested. This was deferred work from TCP KM-0003.

B. Comm/Instr/TV and C&W -

C. Structural/Mechanical/ECS -

D. Experiments -

(1) M512

(2) S009

(3) RNBM

- Threshold adjustments and settings were out of normal limits. The unit was removed and returned to MSFC for analysis. The replacement unit was successfully tested.

- Alignment marks on the power cable and mating connector did not align. Cable and connector were found to be proper. Alignment marks were repositioned.

(4) Proton Spectrometer

(5) EREP S190

- Performed S190 retest

- Loss of signal required C&D Panel rework.

(6) EREP S192 - Retest after rework

(7) EREP S193

- Test objectives met with data anomalies.

(8) EREP S194

(9) EREP Sim Data Pass

- C&D Panel changed-out in pass #1

- Quick look timing problem in pass #2

7.7.10 <u>SWS End to End Systems and Experiment Test (KS-0045)</u>

7.7.10.1 <u>Test Objectives</u>

A. Electrical System - Functional verification of Electrical System including:

- MDA running lights

- S190 Window Heater Verification

- AM to CSM (Simulator) Power Transfer Evaluation

B. Communication/Instrumentation/Television and Caution and Warning - Functional verification of COMM/TV System including:

- Speaker Intercom Assembly operation and interface compatibility with AM and OWS.
- TV input station operation and compatibility
- Functional verification of INSTR/C&W Systems including:

  Temperature Transducer Monitoring

  Caution and Warning Alarm operation and compatibility with AM and OWS

C. Structures/Mechanical/ECS -

- Verify operation of MDA vent valves via the OWS switch selector
- Verify the Instrument Unit - Orbital Workshop (IU-OWS) - Interface through operation of the MDA vent valves via IU Command.

D. Experiments -

- M512 - Confidence level verification of the vacuum system
- RNBM - End to end verification of RNBM alert
- EREP - Perform operational checkout of Earth Resources Experiment Package

7.7.10.2 Test Location

Vertical Assembly Building (VAB)

7.7.10.3 Documents Used to Develop this TCP

- Test and Checkout Requirements Specification and Criteria MDC-E0122
- Skylab Integrated System Test Checkout Requirements and Specifications. TM012-003-2H

- Skylab AM/MDA/ATM PAD/VAB Mechanical Requirements 65ICD9542

7.7.10.4 Test Configuration

- Radial and axial hatches open (drogues not installed)
- MDA internal platforms installed
- MDA internal GSE lighting installed
- MDA internal ground lug assembly installed
- Radial port protective sleeve installed
- Axial port protective cover installed
- All MDA experiments installed

7.7.10.5 Test Summary

This test was utilized to retest many discrepancies deferred from previous testing and was the final test for most of the hardware/systems which included the following:

A. Electrical - Sequence 05 was deleted and S190 window heater control system verification was performed by Test Preparation Sheet (TPS) which successfully demonstrated the operation of the S190 heater system.

B. Comm/Instr/TV and C&W - During the TV system checkout, the camera power cable would not mate with TV input station. Problem was corrected by reworking the TV input station.

C. Structural/Mechanical/ECS - Failure of Docking port heater thermostat to close. Problem was corrected by replacing unit.

D. Experiments -

- M518
- M133
- M074

- M172
- M093
- M092
- M171
- M131
- T013
- S019
- T027
- M509
- EREP
  - Added index marks for visible alignment controls on S192.
  - Operated EREP through Sim Data Pass

The test was successful and all test objectives were accomplished.

7.7.11 Swing Arm Overall Test (KS-0008)

7.7.11.1 Test Objectives

Verify SWS/Launch Vehicle compatibility during countdown and during an abbreviated plus count (approximately 10 minutes) while in a minimum GSE/ESE cabling configuration.

7.7.11.2 Test Location

Vertical Assembly Building (VAB)

7.7.11.3 Documents Used to Develop this TCP

- TCRSD MDC-E0122

7.7.11.4 Test Configuration

- AM/MDA/OWS/ATM/LV mechanically and electrically mated.

- SWS Bus, DCS, INSTR, Coolant and C/W powered

7.7.11.5 Test Summary

MDA vent valves were operated through all IU switch selector command combinations to determine the effect on SWS circuits. The TM event lights were monitored for proper indication during this operation. The insulation and window purge was initiated and terminated at swing arm retraction. All test objectives were accomplished.

7.7.12 Saturn Workshop (SWS) Operations and Space Vehicle - Overall Test Mission Simulation/Flight Readiness Test (KS-0009)

7.7.12.1 Test Objectives

A. Electrical System - Support systems and provide loads for simulated mission.

B. Communication/Instrumentation/Television and Caution & Warning - Functionally verify proper operation of the Audio, TV Instrumentation and C&W Interface compatibility during Simulated Mission Sequence.

C. Structures/Mechanical/ECS -

- Functionally operate MDA vent valves during a simulated SL-1 countdown and countup.
- Activate all MDA fans in various combinations with other AM/MDA/OWS systems to determine overall effects during simulated orbital operations.

D. Experiments - Verify compatibility of following experiments with other systems when run concurrently:

- M512
- Proton Spectrometer
- RNBM
- S009
- Operate Earth Resources Experiment Package (EREP) in support of a simulated flight orbital operation.

7.7.12.2 Test Location

Vertical Assembly Building (VAB)

7.7.12.3 Documents Used to Develop this TCP

- Test Checkout Requirements Specification and Criteria MDC-E0122
- Skylab Integrated System Test Checkout Requirement and Specifications (TCRSD) TM012-003-2H
- Skylab (AM/MDA/ATM) PAD & VAB Mechanical System Requirements 65ICD9542

7.7.12.4 Test Configuration

- SWS/LV mechanically and electrically mated
- M512 Vacuum System Connected
- All MDA experiments installed and electrically connected

7.7.12.5 Test Summary

The MDA hardware was operated primarily in support of an overall Mission Simulation and Flight Readiness Test. The test was performed with no major problems and test objectives were accomplished.

7.7.13 Integrated Crew Compartment Fit and Functional (C^2F^2) (KS-0010)

7.7.13.1 Test Objectives

A. Verify no interference between equipment that interfaces with the flight crew and other equipment.

B. Demonstrate no impact to crew mobility and safety when functioning these interfaces.

C. These objectives will be accomplished on equipment not previously verified at the contractor's plant and/or on equipment that was modified/recalibrated subsequent to verification at the contractor's plant.

7.7.13.2 Test Location

Vertical Assembly Building (VAB)

7.7.13.3 Documents Used to Develop this TCP

This TCP was developed to accomplish the deferred C^2F^2 work originally specified in the MDA TCRSD.

7.7.13.4 Test Configuration

- SWS/LV mechanically and electrically mated
- AM/MDA powered down
- AM/MDA internal lighting and platforms installed

7.7.13.5 Test Summary

This test was conducted with no major problems and all deferred C^2F^2 items were accomplished. TCPs KM-3014, Stowage of MDA Hardware, and KM-7000, Stowage of Experiments, were performed in conjunction with the integrated C^2F^2 TCP.

7.7.14 Saturn Workshop Electrical and Mechanical Closeout (KS-0016)

7.7.14.1 Test Objectives

A. Perform all possible power-off AM/MDA/ATM final switch and valve verifications and white light inspections, external and internal, to the MDA prior to Countdown Demonstration Test (CDDT).

B. Perform docking drogue installation in MDA axial and radial tunnels and closeout docking port hatches.

C. Perform axial docking target installation.

D. Perform fit check of S009 detector package.

7.7.14.2 Test Location

Vertical Assembly Building (VAB)

7.7.14.3 Documents Used to Develop this TCP

- Skylab Integrated System Test Checkout Requirements and Specifications. TM012-003-2H.
- Skylab (AM/MDA/ATM) pad and VAB Mechanical Systems Requirements. 65ICD9542.

7.7.14.4 Test Configuration

- MDA axial port external access platform installed
- SWS/LV mechanically and electrically mated
- AM/MDA powered down
- AM/MDA internal lighting and platforms installed

7.7.14.5 Test Summary

Final "Checkout" was accomplished of all open items which would not be used or disturbed during Countdown Demonstration and Countdown. All possible unpowered switch and valve positioning was performed. Final photographs and biological samples were taken. All test objectives were accomplished with no major problems.

7.7.15 SWS Operations for S-V CDDT-Recycle-CD (KS-0007)

7.7.15.1 Test Objectives

A. Countdown Demonstration (MDA)

B. Earth Resources Experiment Package (EREP):

S193 PYRO installation check of reset relays and stray voltage was made.

S193 and S194 antenna protective covers were removed.

C. Provide MDA purge from cryo loading through lift off. (SIM) CDDT.

D. Remove all MDA internal nonflight covers for AM/MDA closeout.

E. Perform final AM/MDA leak test.

F. Remove all MDA external nonflight covers prior to countdown.

G. Remove MDA window covers and inspect and clean windows.

H. Install radial docking target.

I. Place all MDA switches and valves in final position for AM/MDA closeout, and photograph.

J. Remove MDA hoist and track for AM/MDA closeout.

K. Remove MDA internal lights and platforms for AM/MDA closeout.

L. Perform final white light inspection for AM/MDA closeout.

7.7.15.2 Test Location

Launch Complex (LC) 39A

7.7.15.3 Documents Used to Develop this TCP

- Systems Composite Mechanical Schematics 10M30899
- AM/MDA Mechanical ICD 13M02521
- Skylab (AM/MDA/ATM) pad and VAB Mechanical System Requirements 65ICD9542
- Skylab Integrated System Test Checkout Requirements and Specifications TM012-003-2H
- Test and Checkout Requirements, Specifications and Criteria at KSC for AM/MDA. MDC-E0122

7.7.15.4 Test Configuration

- SL-1 stacked on pad
- AM/MDA powered down
- MDA radial and axial hatches closed, drogues installed

- AM/MDA internal lighting and platforms installed
- MDA hoist and track assembly installed
- Payload Shroud Platform levels 1, 2, 3, and 4 installed
- Axial Docking Target installed

7.7.15.5 Test Summary

Final equipment and film vault stowage was performed, prior to AM/MDA closeout, per TCP KM-3014.

Sequentially, the white light inspection, nonflight cover removal, MDA switch and valve positioning and photography was performed on the upper and lower MDA platform levels. The lights and platforms were removed in the same order, which completed MDA closeout operations.

External MDA operations included nonflight cover removal, MDA Window Inspection and Cleaning (concurrent with internal operation). During recycle only, the external nonflight covers were reinstalled for final removal during CD. All test objectives were accomplished.

The final countdown was conducted with no problem on the MDA.

7.8 MISSION SUPPORT TESTING

7.8.1 Introduction

Mission support testing of MDA hardware in St. Louis was directed by the SL-AL/MDA Program Office. Testing was performed per Engineering Test Order (ETO). The ETO identified the test objectives and established test requirements. Sometimes the test procedure was contained in the ETO, but normally the test procedure was contained in a Mission Preparation Sheet (MPS) if "MDA only" hardware was involved, or by a PCN to a MDAC-E Test Procedure (SEDR) if the MDA and the AM were involved.

MMC also provided mission support to the MDAC-E, Skylab Test Unit/Spacecraft Tracking and Data Network (STU/STDN) simulator. See paragraph 7.9.

7.8.2 On-Module Mission Support

7.8.2.1 MDA Work Station Evaluation(ETO MDA/SL/BU/94)

This test was performed on 5/18/73 to determine the minimum on-orbit lighting required in the MDA to support the SL-2 mission under reduced power conditions. Minimum lighting arrangements were subjectively determined, and recommendations were forwarded to KSC.

7.8.2.2 Radial Hatch/Docking Probe Interference Test(ETO MDA/SL/BU/95)

This test was performed on 8/30/73 in support of SL-3. It proved that although there are dimensional differences in the axial & radial docking ports, there would be no trouble docking a CSM to the radial port if a rescue mission were required.

7.8.2.3 Determination of AM/MDA EMI Noise Levels in Support of SL-1(ETO MDA/SL/BU/96)

This test was performed to determine the magnitude of EMI on utility outlets in the MDA at three specific frequencies. The test was performed to support the "6-pack" Rate Gyro installation on orbit and indicated that noise levels measured would not affect its operation.

7.8.2.4 Multipurpose Electrical Furnace (MEF) Control Package to Flammability Specimen Mounting Ring Electrical Resistance Test(ETO MDA/SL/BU/97)

This test was performed to determine the electrical resistance between the MEF control package and its mounting point. Data was gathered to verify a different MEP power interface for SL-4 and forwarded to KSC for evaluation.

7.8.2.5 Removal of MDA Cabin Fan #2 Diffuser with In-Flight Maintenance Tools(ETO MDA/SL/BU/98)

This test was performed to determine if the #2 Cabin Fan diffuser could be removed with in-flight maintenance tools. The removal was being considered to effect cooling of the "6-Pack" rate gyros. Removal was accomplished with In-Flight Maintenance tools and the procedure used in test was forwarded to KSC.

7.8.2.6 Fit Check of S082 Timer Cable(ETO MDA/SL/BU/99)

MSFC's decision to add a timer to the S082 Experiment resulted in a test being performed in support of SL-4, to fit check an auxiliary S082 Timer Cable in the MDA and to evaluate a crew procedure for installing the cable. SL-4 crew members participated in the test on 9/12/73. The fit check was satisfactorily accomplished and the crew members approved the procedure.

7.8.2.7 Fit Check of ATM TV Bus Redundancy Connector Module (ETO MDA/SL/BU/100)

This test was performed to determine the best way to install a connector module capable of switching the ATM TV from one Bus to another in the event one Bus is lost. It was performed with a mock-up module on 9/17/73 in support of SL-4. A procedure was developed and recommendations were forwarded to JSC.

7.8.2.8 Timer Cable Crew Interface(ETO MDA/SL/BU/101)

This test was performed on 9/17/73 to evaluate the task of demating and remating ATM C&D Panel connectors on-orbit in support of SL-4. It was basically a rerun of ETO 99, using a different pair of connector pliers. The procedure developed in ETO 99 required demating and remating a total of four connectors to install the cable. It was desirable to develop a procedure that would not require demating more than one connector. A procedure was developed, using the same connector pliers (on-board maintenance) that were used in ETO 99, and forwarded to JSC for evaluation.

7.8.2.9 Fit Check of S082 Timer Cables(ETO MDA/SL/BU/102)

This test was performed to select one of two cables fabricated for SL-4 and verify crew procedures for installation. A crew systems representative from JSC hand carried the cables and procedures to St. Louis. Several methods were tried on 9/24/73 and test results were sent to JSC for evaluation.

7.8.2.10 Fit Check Two TV Bus Connector Modules (ETO MDA/SL/BU/103)

This test was performed on 9/25/73 to evaluate the task of installing a connector module in the ATM C&D on-orbit. It was

basically a rerun of ETO 100 with two flight quality connectors. Installation of both modules was verified and as a result, the ETO 100 procedures were amended. Test results were sent to JSC by a participating JSC representative.

7.8.2.11 Radial Docking Port Insulation Blanket Removal Verification(ETO MDA/SL/BU/104)

This test was performed on 6/14/73 to develop a method for removal of the radial port insulation blanket from within the MDA. The test was performed to support a proposal to carry an auxiliary Solar Array Module on SL-4 that would be docked to the MDA radial port. Access to the Solar Array Module on-orbit would be through the Radial Docking Port from inside the MDA. The insulation blanket in question was designed to be removed from outside the MDA. Two methods for removal of the blanket from inside were successfully employed and test results were sent to JSC.

7.8.2.12 Fit Check of Cable for the "Carry-Up" Rate Gyro Package(ETO MDA/SL/BU/105)

This test was performed to fit check a "Y" cable to supply power for the "6-pack" rate gyro package that was installed in the MDA by the SL-3 crew to replace the ailing SWS rate gyros on orbit. The test successfully developed a procedure for installing the "Y" cable in the Flight MDA.

7.8.2.13 MDA Ground Measurements Analysis(ETO MDA/SL/BU/106)

This test was performed to evaluate MDA transient voltages and the possibility of their affecting the "6-pack" rate gyros on the SL-3 mission. A modified simulated flight sequence was run and voltage transient measurements were made at Panel 139. Data accumulated was sent to MSFC for evaluation.

7.8.2.14 M518 Power Adapter Assembly Test(ETO MDA/SL/BU/107)

This test was performed to fit check and test a power cable that would allow M518 to be powered from Panel 202-CB512 rather than Panel 115 which was already in use. The cable was installed, flight loads were simulated, and the M518 was operated. The test was successful and results were sent to MSFC.

7.8.2.15 Fit Check of Flight S082 Timer Cable (ETO MDA/SL/BU/108)

This test was a rerun of ETO's 99 and 100 with a modified back-shell design. JSC personnel participated in the successful test and a new installation procedure was developed. Test results were sent to JSC.

7.8.2.16 Evaluation of Screw Removal Tools (ETO MDA/SL/BU/109)

This test was performed to evaluate new tools that were designed for removal of the ATM C&D kickplate on-orbit because flight maintenance tools were inadequate.

Two tool designs were evaluated that could successfully remove the screws in question. One design of a collet type was determined to be best. Test results were sent to JSC.

7.8.3 Skylab Test Unit/Spacecraft Tracking & Data Network (STU/STDN)

Mission support for pre-launch and inflight television anomaly investigation was provided by utilization of the STU/STDN simulator at MDAC-E, St. Louis.

MMC support of the television system portion included design of breadboards, GSE and simulated components, as well as providing the personnel to investigate anomalies and evaluate system performance during and after each mission. The Skylab TV system portion of the STU is shown in Figure 7.8-1.

System performance was evaluated by review of video recordings of downlinked real and delayed time color TV and ATM TV. Details of the overall STU/STDN activities are discussed in paragraph 7.9.

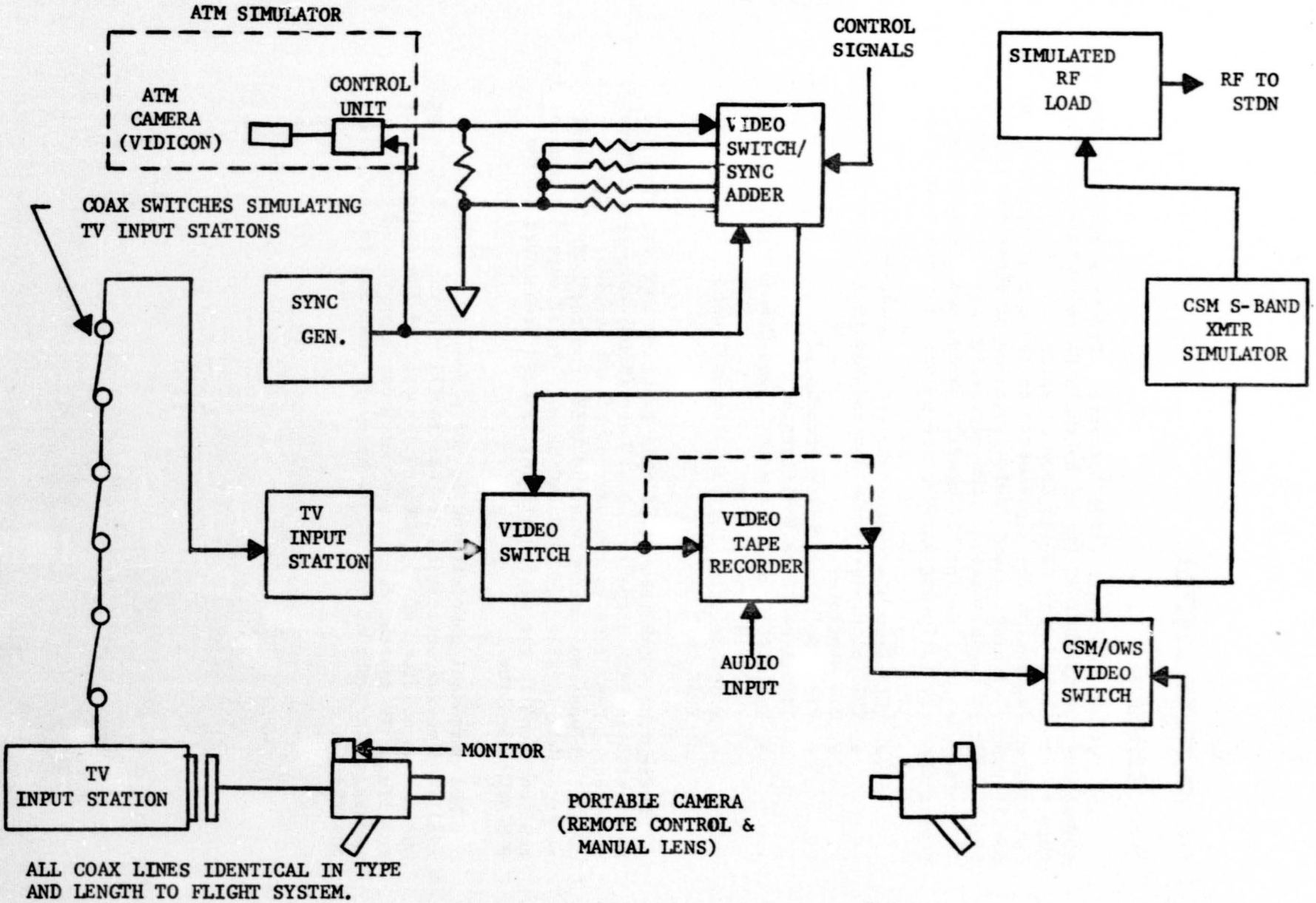

Figure 7.8-1 Skylab TV System - STU/STDN

7.9 MMC STU/STDN ACTIVITY

7.9.1 Background

The Systems Test Unit (STU)/Spacecraft Tracking and Data Network (STDN) was established at MDAC-E by the NASA to provide mission support for the orbital Skylab Communications and TV systems. The test configuration was implemented to the extent necessary to permit ground simulation and fault isolation of anomalies that might occur in these systems. MMC supported this activity with TV system personnel during all mission phases and, in addition, provisioned the following hardware components for the test unit:

- TVIS Simulator with nonflight connectors
- TVIS Simulator Isolation and Mounting Plates (4)
- VTR Simulator
- Video Selector Switch Breadboard
- TVIS Breadboard Modification
- New TVIS Simulators with Flight Connectors
- T027 Simulator Cable
- Video Selector Switch Delta Qual Unit
- TVIS Unit

During the establishment of this facility, MMC was directed to provide an EREP Diagnostic Data Unit (EDDU) to permit telemetry of selected EREP data to the various ground stations. This capability was implemented via the TVIS from the EREP C&D Panel as described in paragraph 7.9.2-C below. Total system compatibility was functionally verified utilizing an EDDU breadboard in the STU/STDN facility.

MDA personnel participated in the planning, testing and readiness review activities at this facility prior to SL-1 launch. During the mission, MDA TV personnel supported the evaluation of downlinked TV and the development of procedures for onboard repair/replacement of orbital TV hardware that had failed, e.g., the VTR.

7.9.2 Hardware Description

A. TV Input Station Simulator - Good flight fidelity was a major goal in the fabrication of the system, however, it was not necessary to make exact duplications in all cases. A flight TV Input Station (TVIS) was acquired for the installation, but the remaining four were simulated in their "off" state, since only one TVIS was active at any one time. In the "off" position, the TVIS behaved as a switch to connect the bus input to the TV bus output and utilized only a minimal amount of circuitry in accomplishing this. The actual parts comprising this circuitry, a PC board, relay, coax cabling and connector, were used in the TVIS simulator and verified by Time Domain Reflectometry (TDR) tests. The TVIS simulator duplicated the flight TVIS in the "off" mode. A flight Video Switch and VTR were assembled in racks along with the TVIS and simulator using actual lengths of flight type cable with all significant system cable impedance discontinuities duplicated. Care was taken to preserve the single point ground concept so that only one signal ground was used at the CSM simulator.

B. TVIS and Video Switch Breadboard - Breadboard models of the TVIS and the Video Switch were built to provide a flexible diagnostic capability for the installation. The design criteria applied to each unit was the functional portion of respective flight hardware specifications. The TVIS breadboard was a modification of the engineering model. This was accomplished by mounting the amplifier boards on standoffs external to the TVIS housing, while the power supply remained inside the housing. One channel of the Video Switch consisting of a DC to DC converter and amplifier was built and packaged with flight connectors. The parts on both TVIS and Video Switch breadboards were easily accessible for probing or for component changes. Both units were verified prior to installation into STU/STDN by performing functional tests in accordance with their individual Acceptance Test Procedures.

C. EREP Diagnostic Downlink Unit (EDDU) - A new Skylab mission requirement for a downlink capability for EREP led to design of a device to interface EREP data with the TV system through a TVIS. This device, called the EREP Diagnostic Downlink Unit (EDDU), processed EREP data to the correct amplitude, bias level and impedance source for compatibility with the TVIS interface specifications.

(1) Design Requirements - The design requirements for the flight and One-G trainer EDDU's were specified in the "End Item Specification for Flight Hardware

for EREP Diagnostic Downlink Unit", MSC-05512, dated March 11, 1973. The ICD's affected were 40M35673, (PIRN MMC-0), 40M35673, (PIRN MMC-9) and 50M16154 (PIRN MMC-12). These units were built to model shop standards and the DD250 activity was not constrained by the approval of the above referenced documentation.

Parallel with the building of the flight hardware and storage provisions was a feasibility program to determine the compatibility of the EREP data downlink with the TV system, CSM USB transmitter, and the Spaceflight Tracking and Data Network (STDN). A one channel breadboard was built and tested to criteria included in the amendment to the contract modification authorized by CCA 857 Rev. 1 dated 3-16-73.

(2) Functional Description - The EDDU provided a method of checking the real time data outputs from EREP. A total of twenty-eight channels were carried on three cables from the EREP C&D panel to the EREP Recorder. Twenty-six of these were digital data channels and two were FM data channels. One cable carried eight channels and two additional cables carried ten channels each.

In order to check or monitor the EREP real time data outputs, it was necessary that the cables be manually connected to the EDDU. Only one cable could be connected and tested at a time. A rotary switch on the EDDU permitted the selection of the desired data channel and routed it to an isolation amplifier. The signal was then fed to the SWS TV system for eventual transmittal to a ground station where it was monitored for data content.

An EDDU breadboard was built to the same electrical design as the flight unit, utilizing as many of the identical components as possible. Cabling and connectors were identical to the flight units.

Two pieces of test equipment for testing the EDDU BB were also built. One, the Input Signal Simulator (ISS), simulated the EREP C&D Panel data channel signals and outputs. The other, the Tape Recorder Input Simulator (TRIS), simulated the EREP Tape Recorder inputs.

The ISS was built so that any one of the 28 data channels could be simulated. The ISS had 10 digital data outputs, two of which could be FM data outputs.

The TRIS simulated the input loads of the EREP Tape Recorder data channels.

(3) Test - Each box was tested at Denver individually, then in the complete system. The final tests were performed at STU/STDN to simulate the rest of the flight system.

- Testing at Denver was performed by I&C engineering.
- No formal tests were performed or required on the EDDU flight units in Denver.

No formal test procedures were available. Minimal testing was accomplished at STU/STDN.

Testing of the EDDU breadboard at STU/STDN was performed to Test Procedure, STDN Test ED018 generated by I&C engineering. No problems were encountered and testing was successfully completed.

(4) Mission Results - The EDDU was first used on SL-3. It performed satisfactorily for this and the following (SL-4) mission.

(5) Conclusions and Recommendations - The EDDU Breadboard, ISS and TRIS were built in limited time. More time for procurement of parts would have been helpful, as some parts were received late and had to be installed at St. Louis.

The circuits all performed as expected. The results of the test gave I&C confidence that the EDDU would pass data through the TV system without degradation.

7.9.3 Prelaunch Tests

A test plan was formulated by MMC and MDAC-E engineers from test requirements prepared by SE&I and put into a MDAC-E format. These tests were designed to assure STU/STDN system readiness, provide calibration data and off-nominal and anomalous performance characteristics. The evaluation was done in three steps: #1 - System Nominal Tests, #2 - Off-nominal Tests and #3 - Anomaly Testing.

The tests of Step #1 were preceded by an installation validation test, i.e., a continuity and short test of the systems cabling and grounding system. The remainder of the test followed the outline below.

7.9.3.1 STU TV Phase II Test Requirements

A. CSM/STDN Calibration -

- Carrier Noise
- Signal Noise
- FM Demod CW and Dynamic Characteristics
- Transmitter Static Characteristics
- Transmitter Frequency Response
- CSM/STDN Dynamic Response
- CSM/STDN Linearity
- CSM/STDN Diff. Gain
- CSM/STDN TI LT
- CSM/STDN K Factor
- Audio Splitter Cal.
- Color Converter Cal.
- VTR Control Function - DCS and Manual

B. Systems Test With GSE Signal Source -

(1) Color Camera TV Distribution System

	SWS Only		SWS/CSM/STDN	
	R/T	VTR P/B	R/T	VTR P/B
Freq. Response	X	X	X	X
Linearity	X	X	X	X
Diff. Gain	X	X	X	X
Tilt	X	X	X	X
K Factor	X	X	X	X
Video S/N	X	X	X	X
Transmitter Deviation	N/A	N/A	X	X

(2) ATM

	SWS Only				SWS/CSM/STDN			
	MON-1		MON-2		MON-1		MON-2	
	R/T	P/B	R/T	P/B	R/T	P/B	R/T	P/B
Freq. Response	X	X	X	X	X	X	X	X
Linearity	X	X	X	X	X	X	X	X
Diff. Gain	X	X	X	X	X	X	X	X
Tilt	X	X	X	X	X	X	X	X
K Factor	X	X	X	X	X	X	X	X
Video S/N	X	X	X	X	X	X	X	X

C. Systems Test With Camera Inputs As Signal Sources -

ATM	SWS Only				SWS/CSM/STDN			
	MON-1		MON-2		MON-1		MON-2	
	R/T	P/B	R/T	P/B	R/T	P/B	R/T	P/B
Resolution	X	X	X	X	X	X	X	X
Grey Scale	X	-	X	-	X	-	X	-
Video Levels	X	-	X	-	N/A	-	N/A	-
Transmitter Deviation	N/A	N/A	N/A	N/A	X	-	X	-

D. Off-Nominal Tests -

(1) Vary power bus voltage from 24 to 30 volts and measure output at MDA/CSM interface:

- With MDA TVIS activated and with 50% multiburst input.
- With Video Switch activated in ATM-1 position with 50% multiburst input.

(2) Vary input video signal to MDA TVIS

- Peak to Peak amplitude from 1.5 to 2.0 volts.
- Sync tip bias -0.7 to +0.57 volts.
- Maintaining ATM sync amplitude and sync tip bias constant , vary ATM video to determine input level which causes white compression.
- With standard video input to video switch, vary gain of video switch to determine point at which white compression first occurs.

E. Anomaly Testing - A final form of tests was devised to observe and record operational symptoms resulting from induced anomalous performance to assist in recognition of system malfunctions and to aid in fault location during mission support. The following effects were evaluated.

- Converter Noise - Open filter capacitors in Video Switch Breadboard to produce coherent noise.

- Shield Grounds - Ground TV bus shield at TVIS output, Video Switch TV bus input and VTR video input. Ground ATM video shield at MDA Video Switch video input. Witness effects of ground loops on TV performance.

- Power Grounds - Connect 28 V return to structure ground and note effects of ground loops on TV performance.

- Crosstalk - Introduce video signal into MDA TVIS with MDA Video Switch in ATM - MON-1 mode and with no ATM video input, observe crosstalk on output TV signal with and without a short between ATM and TV bus shield and TV bus shield connected to structure ground.

- Supply Voltage - Drop supply voltage to TVIS and MDA Video Switch to that point which causes degradation in video output and note values.

7.9.4 Mission Support

Mission support effort was conducted mainly in two areas, monitoring system performance through tape reviews and conducting special tests in compliance with I&C action requests. Implicit also to support was another segment consisting of station keeping.

A. Tape Reviews - The continuing surveillance of TV system performance was supported by systematic review of video tapes dubbed from originals made at the MILA STDN. In contrast to SL-2 support, the tapes monitored for SL-3 were VR1100 to VR1100 dubs, instead of VR660 originals, and in general, produced much improved NTSC color conversion than the VR660 tapes.

The purpose of the review was to identify significant performance degradation, rather than small variations. This review method was largely by design, but, in part, was due to necessity. Although the VR1100 tapes appeared to have lower noise content than the VR660 tapes received during the previous mission, noise still precluded rigorous evaluation of frequency response and linearity using the VITS of the portable color camera. This effect existed even when the video S/N was sufficient for good TV viewing and was due to the eye's response to noise when viewing A-AXIS display of video, as opposed to Z-AXIS display. The eye tended to respond to peak values of noise for the former case and rms values for the latter. Another contribution to the difference was that the video S/N calculated for TV viewing was

based on maximum video signal (100 IEEE units), whereas, measurement of VITS for frequency response, for instance, used the actual amplitude of the bursts. The results of these factors was to produce a drastic disparity in the effects of noise on the two different displays with the S/N of "A" display often being 26 DB below that calculated for TV viewing.

The tape review was implemented in procedural form which set a minimum requirement for the review, and did not attempt to limit the parameters of performance to be monitored. Listed below are some additional parameter variables that were surveyed for anomalies.

- Geometric Linearity
- Image Orientation
- Image Burn
- Beam Extinction
- Shading
- ALC Stability
- Sync Stability
- Face Plate Contaminants

The technique of selectively photographing waveforms and logging characteristics allowed frequent back check of data for trend detection.

Color conversion was made of portable TV camera video with best results when the converter had been adjusted using taped sequences having the Skylab color bar chart in the scene. Use of the Field Sequential Color Bar generator as a color signal source in adjusting the converter produced color with a red cast when Skylab tapes were processed. Skylab lighting probably accounted for this requirement for color correction.

The review of SL-2 and SL-3 and SL-4 MILA mission tapes led to the identification of several degrading factors in the performance of the TV system. The most significant of these are listed below:

(1) SL-2 VR660 Original Tapes from MILA -

- On Tape 14503, camera S/N 3002 exhibited coherent noise when televising a low light level scene and on occasion in those views out of the window, black spots showed up in the lower third quadrant of the picture.

- The review of Tape #15003 revealed black spots in lower third quadrant of the picture again. This occurrence was during TV37 where the earth was viewed from the window.

(2) SL-3 Dubs of VR1100 Tapes from MILA made onto VR1100 Tapes at MSFC -

- The Vertical Interval Test Signal (VITS) of portable TV camera S/N 3006 increased from 100/40 IEEE units video to sync format to a 130/40 IEEE format. On DOY 252, the VITS format was 130/40.

- Portable TV Camera S/N 3002 failed on DOY 236. Review of mission tapes indicated that the camera temperature reached approximately 74°C during the EVA on that day.

- The portable TV Camera signal was observed to have a "bounce" of approximately 5 IEEE units when the signal was viewed on the waveform monitor. The "bounce" did not affect the black and white or color quality. The "bounce" was observed on DOY 248 and 253.

- A pulse of approximately 10 IEEE units was observed on the VITS Multiburst Signal on DOY 225 and 228. The pulse was located 8 microseconds from the right edge of the multiburst signal. The problem was isolated to the VR1100 dubbing process, as the pulse did not appear on the original tapes.

- On DOY 265 the video from the ATM H-Alpha-2 camera was pulsating from very light to dark at a 1 Hz rate. The focus was changing at the same rate. This was an indication of problems in the ALC circuits of the H-Alpha-2 camera.

- Image burn was seen on the ATM H-Alpha-2 dumps. The image burn was observed on DOY 244. The video to sync format of the ATM H-Alpha-2 was normal at 100/40 IEEE.

- Peak White Inversion was observed at various times between DOY 215 and 239. The problem was found to be in the VR1100 dubbing process as the Peak White Inversion did not appear in the VR1100 originals.

- The temperature pulse on portable TV camera S/N 3002 and S/N 3006 was measured on DOY 233. The position of the pulse differed between cameras. The temperature pulse of S/N 3006 was displaced approximately 1.5 micro-seconds to the left. This caused the leading edge of the temperature pulse to meet the trailing edge of the VTR Pulse Amplitude Modulation (PAM) pulse before the trailing edge of the PAM pulse could reach blanking.

(3) SL-4 Dubs of VR1100 Tapes from MILA made onto VR1100 Tapes at MSFC

- The format of the VITS of both portable color cameras varied from 100/40 to 130/40 throughout the mission. Significant differences between VITS formats of cameras S/N 3004 and S/N 3006 were not noted.

- The VITS temperature pulse was periodically monitored throughout the review of the MILA tapes. The highest cameras temperature noted was 50 degrees centigrade (122 degrees F) on DOY 012, dump 130-1 from camera 3004. The temperature pulse from camera S/N 3006 continued to be displaced approximately 1.5 micro-seconds as was noted in the SL-3 tape review.

- Narrow spikes, due to head switching during the dubbing process, were seen during the horizontal sync pulse on several tapes.

- TV sequence TV64 was recorded on the Skylab VTR prior to the connection of the SL-4 CSM/MDA umbilicals. Recording on the VTR without the impedance loading of the CSM transmitter created an impedance mismatch. Review of a tape dub of the downlink of TV64 revealed peak white clipping and loss of detail in high light areas. This resulted from clipping of the peak white levels.

- Review of video transmitted via a newly installed inflight maintenance TVIS indicated the unit was performing satisfactorily.

- Earth scenes through spacecraft windows using camera S/N 3006 showed spots thought to be contaminates on the camera face plate.

- An intense oval burn spot located at approximately 10 o'clock on the periphery of the occulting disc was noted during dump 46-1 on DOY 343. A second burn spot located above and to the right of the first spot was seen on dump 119-1 DOY 006, 1974. These burn spots appeared to increase in size by DOY 024 as seen in dump 191-3.

Additional parameter variables were surveyed for anomalies, but did not show significant degradation.

B. I&C Action Requests (AR's) - Eleven I&C AR's were issued to STU/STDN and answered in the period from SL-2 to SL-3 splashdown. All but four required end-to-end system operation and one investigated a new application for the TV down-link. All AR responses were preceded by an internal MMC STU/STDN document, the Engineering Work Order (EWO), that directed and documented the method in which the data was derived.

The following AR's were directed to STU/STDN for action:

(1) IC-30 - Required operation of audio and TV systems to determine the effect of light weight headset position and orientation on audio quality.

The STU audio system was configured and connected to the VTR audio input. Using a test pattern generator, a video input was also provided to the VTR.

Recorded signals and levels and the corresponding results noted during VTR and playback were recorded to provide a baseline for the LWHS test. Tests with the LWHS showed that it could be worn or hand-held at distances up to six inches and produce acceptable audio provided the microphone was oriented toward the mouth.

(2) IC-38 - Test the TV system to determine the most suitable point at which to insert AM tape recorder data for downlink through the CSM FM S-band link.

Five possible downlink configurations were tested:

- AM recorder hardline output "A" to input of AM TVIS.
- AM recorder hardline output "A" to input of MDA Video Switch (J2).
- AM recorder NRZ output "A" to input of AM TVIS.
- AM recorder NRZ output "A" to input of MDA Video Switch (J2).
- AM recorder NRZ output "A" to input Channel "1" of MDA EDDU and then to input AM TVIS.

The above five tests showed either the AM recorder hardline output "A" to AM TVIS or MDA Video Switch would be an acceptable means of downlinking AM recorder data.

(3) IC-40 - Measure the VTR PAM audio pulse with respect to the leading edge of the horizontal sync pulse on selected dubs of flight video tapes.

Playback of selected flight tapes were made on the STU VR1200 recorder using the demod output. Measurements showed that the PAM pulse width remained at 2.22 usec on all flight dumps and at 2.06 usec on both tapes made at KSC on 2/15 and 2/16.

(4) IC-54 - Required operation of the STU audio and video system to determine the maximum audio level possible into the VTR before limiting occurs at the audio splitter output.

An audio signal of varying levels from 10 to 0.4 VRMS was applied to the audio system via SIA headset lines and recorded on the VTR for playback. A video "ten step grey scale" signal was also recorded on the VTR simultaneously.

Measurement on the playback signals indicate that limiting occurred at an audio input level of 4.0 VRMS.

(5) IC-56 - Required operation of the STU Video System to determine the effect of DC offset on output signal quality.

The video switch bias adjustment was used to apply the DC offset. Video inputs of stair step and $\sin^2$ window signal at 100/28 format were used. DC offsets of from -0.14 volts to -2.5 volts sync tip reference at the MDA/CSM interface were obtained with no apparent degradation of the output signals.

(6) IC-58 - Required operation of STU Video System to determine frequency or modulation characteristics of S-band transmitters as a function of VTR playback with no composite video input at an active TVIS.

With no signal there was no modulation of the carrier. With the VTR in record mode and no video signal, there was a modulation of 0.465 MHz on the carrier. With the VTR in playback and no video signal, there was a modulation of 3.433 MHz on the carrier.

(7) IC-62 - Required operation of the STU VTR (S/N FLT 8) with the backup VTR (S/N FLT 7) for compatibility test.

Good compatibility was achieved in all combinations of transport and electronic units of FLT 7 and FLT 8 VTR's. The worst case existed between FLT 7 electronics and FLT 8 transport unit.

(8) IC-72 - Perform a VTR playback with J4 connector cable between electronics unit and transport unit disconnected.

The output at the MDA/CSM interface showed noise spikes of 4.25 volts with a 4.0 millisecond pause between spikes.

The signal, after downlink, showed noise spikes of -1.0 to +2.0 volts. The S-band frequency at ISO AMP output was 2271.2414 MHz. Spectrum analyzer data showed a noise spectrum of 4.0 MHz bandwidth and centered at 50.425 MHz.

(9) IC-73 - Required STU/STDN personnel to develop a procedure to remove circuit boards from the VTR electronics unit.

A color video tape was produced which covered the entire circuit board removal procedure. A written procedure was also prepared to accompany the tape. The procedure was approved by the on-site RCA representative.

(10) IC-81 - Directed support crew training on AM Tape Recorder rework and VTR circuit board change.

On 9/11/73 and 9/12/73, crew members Lind, Pogue and Carr successfully accomplished all tasks per written procedures. No further action was requested.

(11) IC-87 - Directed the shipment of the backup VTR (S/N FLT 7) to RCA, Camden, New Jersey, to test failed flight circuit boards.

VTR shipped 9/24/73 to Camden, New Jersey.

(12) IC-106 - Record video on the VTR without the CSM transmitter connected. Reconnect transmitter, dump and evaluate the video.

White levels above about 55 IEEE units were clipped due to saturation in the VTR.

8. MANUFACTURING

8.1 ARTICLES MANUFACTURED

The Manufacturing Department was involved in the fabrication of the following articles.

8.1.1 Engineering Mockup/One-G Trainer (See Figures 8.1-1 and 8.1-2)

The structural/electrical development phase was initiated with the fabrication and assembly of the Engineering Mockup Unit (EMU) on the factory floor at the MDA mockup area. The EMU was then shipped to MDAC-East where it was mated with the STS-Airlock Module for CSR. The EMU was returned to Denver after CSR and updated to become the One-G Trainer. The One-G Trainer was modified in a mockup area using the team concept in order to reduce the necessary paper work. The team consisted of structure and electrical design engineering, manufacturing pre-production and production engineers, and manufacturing fabrication personnel. The One-G Trainer was then shipped to JSC-Houston to be used to support extensive crew training operations. During these operations the effort was supported by the Denver Manufacturing Engineering Group providing modification instructions and technical assistance for design updating.

8.1.2 Development Mockup (DMU) (See Figure 8.1-3)

After completion of the EMU and prior to the One-G Trainer modification, a development unit was fabricated in the factory mockup area. The electrical harnesses were developed on this, the DMU, to determine wire lengths and routing paths. The simulated harnesses were built in the mockup; then removed and placed on harness boards. Using the simulated harnesses as models, Mylar overlays were designed and used for component location and routing of the production harness and cables.

Several new manufacturing concepts and techniques were introduced during this development phase. Flammability protection of MDA cabling required that all internal wiring be enclosed in " flourel" tubing and connectors closed in woven fiberglass "beta bags". Connectors and cabling that required crew "mating and de-mating" to power boxes, intercoms, and experiments required the use of quick disconnect type connectors and flexible "convolex" tubing. Section 2.2.4 of this report includes illustrations of these fabrication techniques.

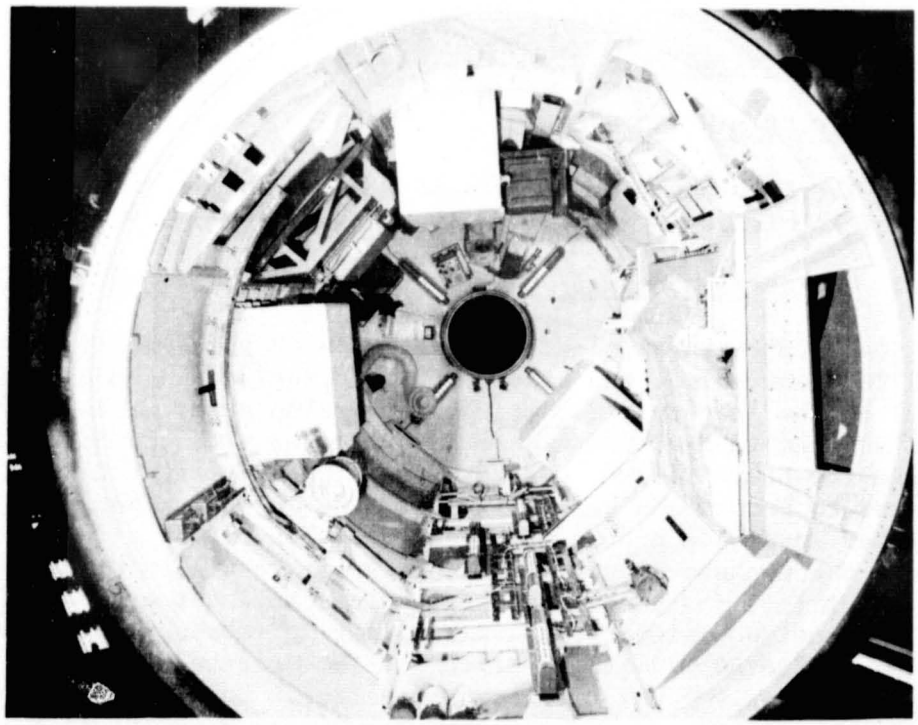

Figure 8.1-1 MDA EMU

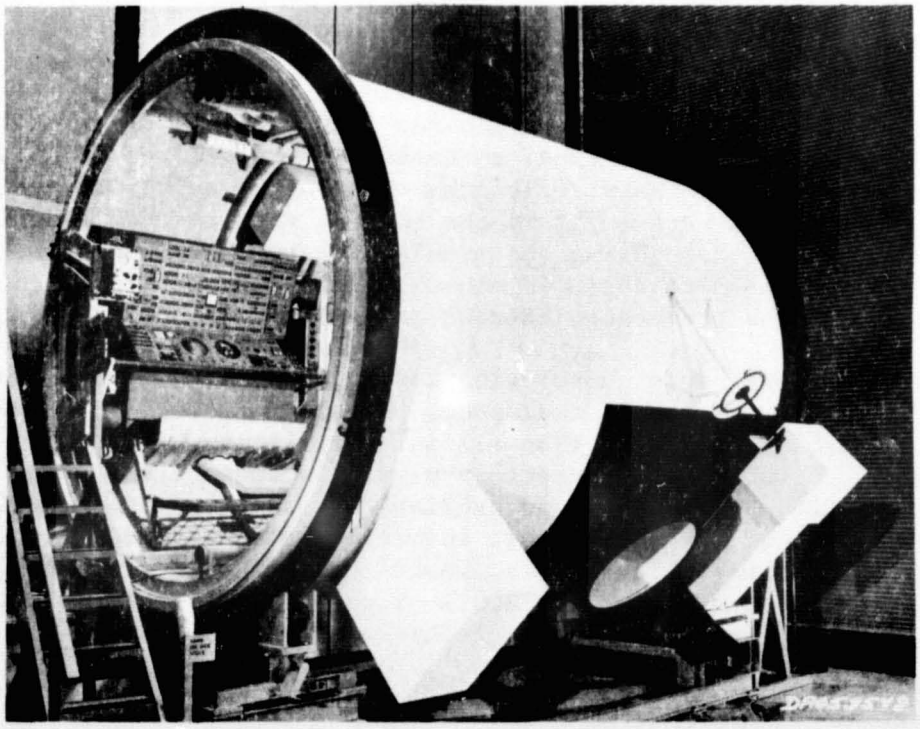

Figure 8.1-2 MDA One-G Trainer

REPRODUCIBILITY OF THE ORIGINAL PAGE IS POOR

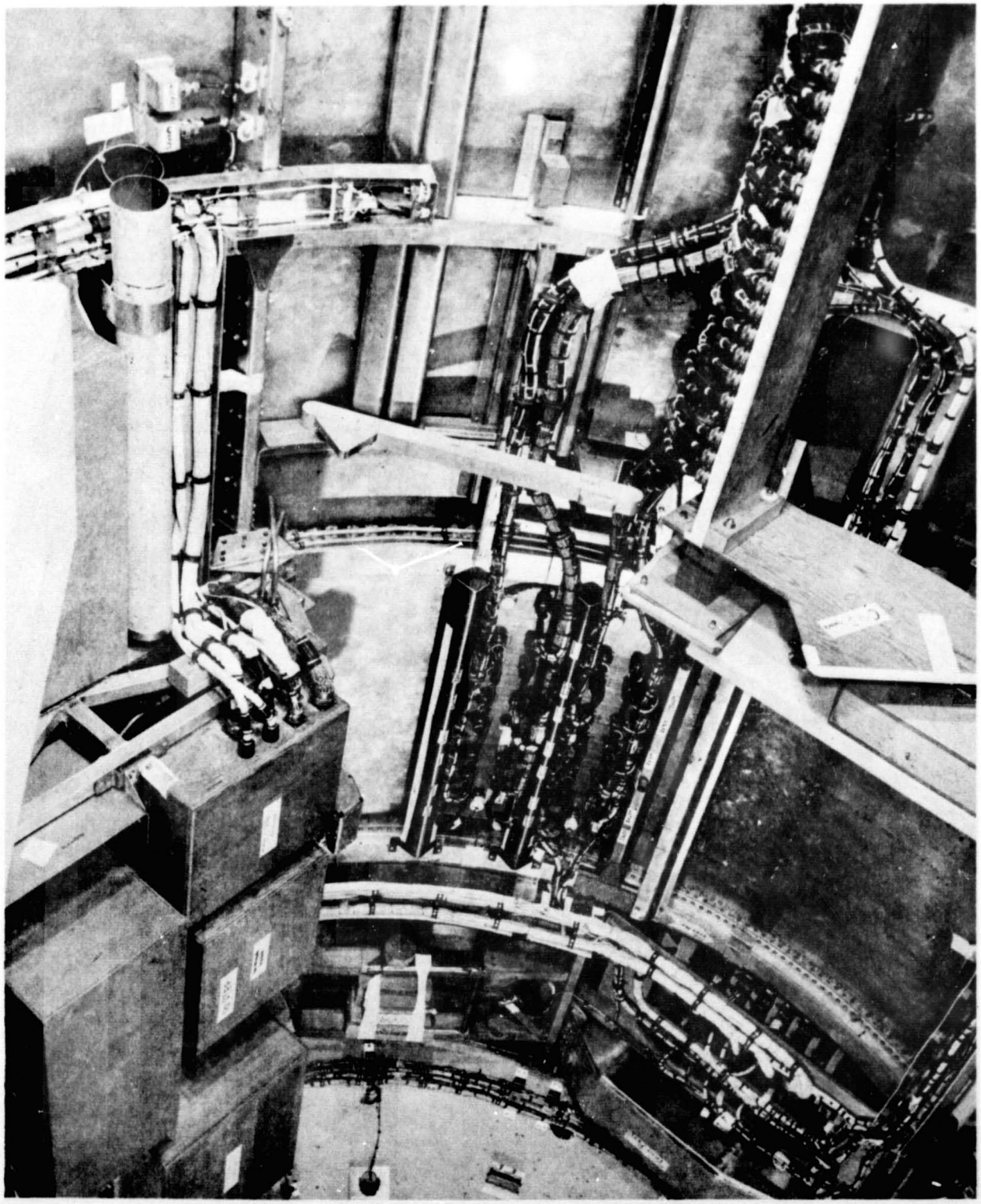

Figure 8.1-3 MDA DMU

REPRODUCIBILITY OF THE ORIGINAL PAGE IS POOR

All wiring was enclosed and routed through cable trays to provide cable protection during flight operations. Design requirements called for both redundant and backup wiring circuits, to be separated physically and routed independently. This resulted in close routing conditions within the trays, increasing the tight tolerances necessary for the harness builds. Equipment fit checks (intercoms, outlet boxes) were performed in conjunction with harness development. The DMU was updated, after the harness development phase, to meet the Code 4 Clean Room environment, and then routed to the SSB high bay to be used as a three-dimensional harness build fixture.

8.1.3 Structural Test Article

The MDA structural test article shell was built at MSFC exclusive of cut-outs for the EREP window, mounting plates, and supporting structure. It was used to support both the static and dynamic test programs. The following mass simulators were provided to MSFC for use in the static test article:

- 10 Band Multispectral Scanner,
- IR Scanner Tracker,
- Multispectral Photography,
- EREP Support Equipment Rack #1,
- EREP Support Equipment Rack #2,
- EREP Support Equipment Rack #3,
- ATM C&D Panel,
- Film Vault #3,
- Fan.

The structural shell was shipped to Martin Marietta Aerospace, Denver, after completion of the static test. MMC outfitted the Static Test Article to the Dynamic Test Configuration for use at MSFC in an acoustic vibration test.

8.1.4 Flight and Flight Backup

The Flight and Flight Backup shell structures were built at MSFC and shipped to Denver for the installation effort. All cut-outs and penetrations were made at MSFC with the exception of those for the S-190 window and actuators, ATM/MDA umbilicals, and the S-191 IR Spectrometer, which were done at Denver.

8.2 MSFC BUILD HISTORY

The following is, in part, a summary of MSFC's Manufacturing Plan for the MDA Pressure Vessel Assembly as revised August 1970. The plan was updated to reflect that the penetrations for the MDA Flight Article windows were installed in Denver rather than at MSFC.

8.2.1 Pressure Vessel Assembly (See Figure 8.2-1)

The MDA Pressure Vessel Assembly was manufactured at the NASA/MSFC facility in Huntsville, Alabama, under the auspices of the NASA Manufacturing Engineering Laboratory.

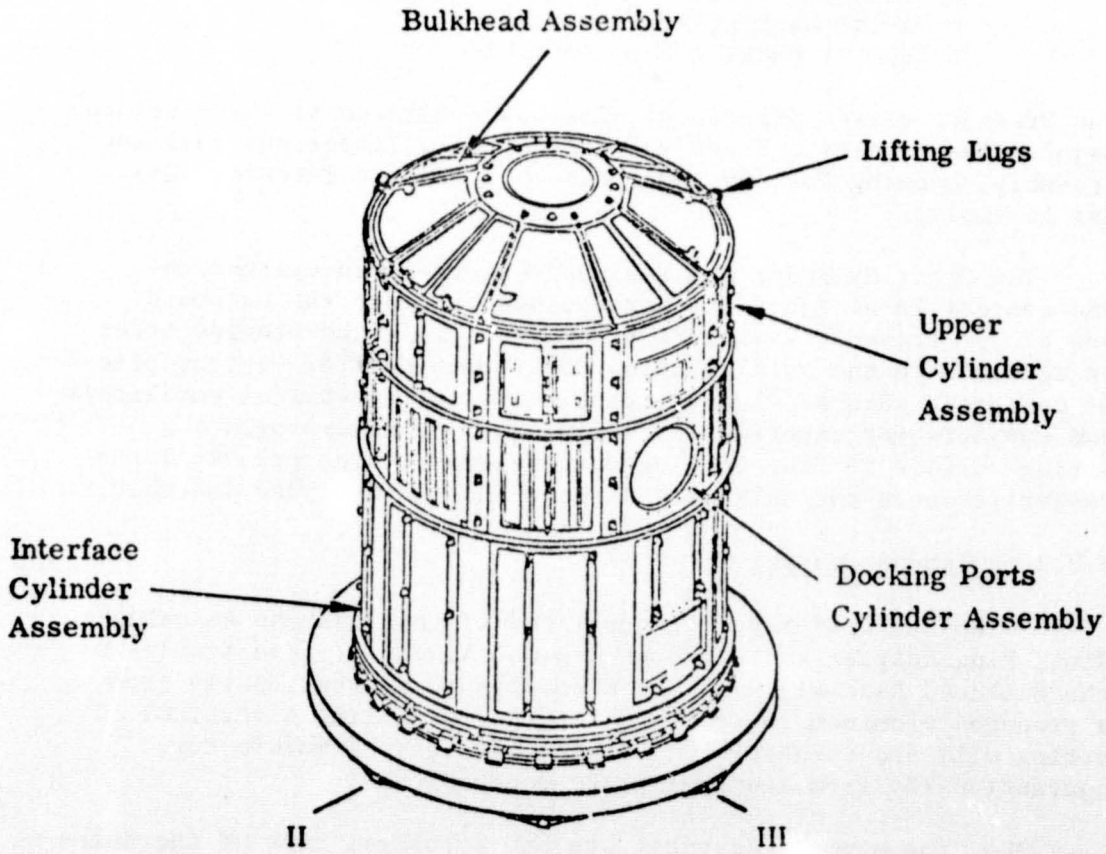

Figure 8.2-1 MDA Pressure Vessel Structure Assembly

The Pressure Vessel Assembly consisted of a welded Upper Cylinder and Bulkhead Assembly, Docking Cylinder Assembly, Lower Cylinder Assembly, and mechanically assembled Axial Docking Port and Radial Docking Port Assemblies. Welded Interface Tees on the external structure and welded Interface Fittings on the Bulkhead were provided. Internally, the structure had mechanically fastened Rings, Splice Section openings were provided to accommodate the S192 (10 Band Scanner) Support Plate, Vent Manifold and Umbilicals for Experiment Equipment. The Pressure Vessel was fabricated primarily from 2119 aluminum alloy

The Pressure Vessel Assembly, (See Figure 8.2-1) constituting the bulk of the MDA, was made of three subassemblies. These were:

- Pressure Vessel Structural Assembly
- Axial Docking Port Assembly
- Radial Docking Port Assembly

The Pressure Vessel Structural Assembly consisted of three welded major subassemblies. These were the Upper Cylinder and Bulkhead Assembly, Docking Port Cylinder Assembly and the Interface Cylinder Assembly.

The Upper Cylinder and Bulkhead Assembly was cylindrical and conical in design. Its purpose was to close the outboard end of the Pressure Vessel Structural Assembly and provide areas to accommodate the Axial Docking Port, openings for various pieces of equipment such as windows, vent manifold, electrical umbilicals, and supports for experimental equipment. It also provided a mating surface for the Docking Port Cylinder. The principal subassemblies were the Bulkhead Assembly and the Cylinder Assembly.

8.2.2 Bulkhead Assembly

The Bulkhead Assembly consisted of the Bulkhead Assembly Ring, Ring Adapter and the Cone Segment Assembly. Fabrication of the Bulkhead Assembly Ring was accomplished conventionally from a procured aluminum rolled ring forging, utilizing a vertical boring mill and turntable. The Ring Adapter was manufactured conventionally from aluminum plate material.

The Cone Segment Assembly was the principal part of the Bulkhead Assembly and was fabricated as a weldment from four aluminum alloy segments.

Welding of the Cone Segment Assembly was accomplished on the longitudinal weld and trim fixture by trimming the mating edges of two segments and welding them together to form one 180-degree segment. The two 180-degree segments were trimmed and welded, one seam at a time, to form the Cone Segment.

The Bulkhead Assembly was positioned on the turntable and clamped to receive the Cone Segment. The Bulkhead Assembly Ring was welded to the base of the Cone Segment uitlizing the circumferential welding positioner and welder. The Ring Adapter was welded at the apex of the Cone Segment.

8.2.3 Upper Cylinder Assembly

The Upper Cylinder Assembly was formed by welding together eight Skin Panels. The Skin Panels were formed from aluminum sheet material using a piece large enough to make two Skin Panels at a time. After drilling tooling holes, the material was rolled to the specified radius and then clamped to a heat treat fixture. The Skin Panels were then age-formed to a T-87 condition.

Assembly of the Upper Cylinder was accomplished on a vertical trim and weld fixture. Two Skin Panels were loaded into the fixture and the mating edges trimmed and welded together using specified foot settings. The remaining panels were positioned, trimmed and welded in place, using an alternating sequence until a 360-degree Cylindrical Section was formed. The Bulkhead Assembly was then positioned to the upper edge, clamped and welded in place.

8.2.4 Docking Port Cylinder Assembly

The Docking Port Cylinder Assembly formed that part of the structure between the Upper Cylinder Assembly and the Lower Cylinder Assembly and had an opening to accommodate the Radial Docking Port. Structurally, it consisted of four skin panels, an upper ring and a lower ring.

The four docking cylinder skins were machined, rolled to a defined radius, and then clamped to a heat treat fixture and heat treated to the T-87 condition.

The upper and lower docking cylinder rings were machined conventionally from aluminum rolled forgings.

Vertical trimming and welding together the four skin panels to form the 360-degree cylindrical section of the Docking Port Cylinder Assembly was accomplished in the same manner and using the same tooling previously described for the Upper Cylinder Assembly.

The cylindrical section was positioned on the boring mill and the aft end was milled to the proper dimensions for mating with the lower ring. The cylindrical section was removed from the boring mill and the lower ring positioned to it and clamped in place. The cylindrical skin section, aft end, was mated to the ring and circumferentially welded in place. The upper end was milled and the upper ring secured in a similar manner. The docking port opening was routed using a mill fixture and the holes drilled using a coordinated drill fixture.

The docking cylinder ring caps consisted of 16 segments that were conventionally machined from aluminum plate. The caps were attached to the docking cylinder rings with temporary fasteners after match drilling using an assembly drill fixture.

8.2.5 Interface Cylinder Assembly

The Interface Cylinder Assembly consisted of eight skin panels, an interface cylinder ring and intermediate ring segments. The eight skin panels were processed in a manner similar to that described for the Upper Cylinder Assembly.

The interface cylinder ring was machined from a procured aluminum rolled forging, using a turntable and vertical boring mill.

Horizontal trimming and welding the interface cylinder ring to the cylinder assembly was accomplished in the same manner as comparable operations for the Docking Port Cylinder. A conventionally fabricated ring was secured to the interface cylinder ring for protection while handling. The inner diameter provided for access during subsequent assembly sequences.

The eight intermediate ring segments were rough cut from aluminum plate and conventionally machined to final configuration. After machining, seven segments were match-drilled to the interface cylinder skin using a specialized assembly drill fixture and the mechanical fasteners were then installed. One segment of the ring was installed during final assembly.

8.2.6 Assembly of the Pressure Vessel Structural Assembly

Final buildup of the Pressure Vessel Structural Assembly was accomplished at the circumferential trimming and welding station. All subassemblies were cleaned with an etching compound and the edges to be welded were protected from contamination with aluminum foil.

The Upper Cylinder Assembly was positioned on the turntable, bulkhead down. The Docking Port Cylinder weldment was aligned, mated and tack welded. After completing the circumferential weld, and Interface Cylinder Assembly was hoisted and mated to the aft edge of the Docking Port Cylinder, clamped as required and the closeout weld performed.

8.2.7 Manufacture and Assembly of Docking Ports

8.2.7.1 Axial Docking Port

The Axial Docking Port consisted of three major parts. These were, from forward end to aft end, the cylinder assembly, fiberglass cylinder and lower ring. The cylinder assembly was manufactured from an aluminum rolled forging.

The fiberglass cylinder was "laid-up" on a bond-form fixture, using preimpregnated fiberglass sheets, S-glass, roving material and adhesive until the proper thickness was obtained. The interface surfaces of the fiberglass cylinder were built up to a plus tolerance with glass cloth plies that could be peeled at assembly to attain optimum fit.

The lower ring was manufactured from an aluminum rolled forging in the same manner as described for the flanged ring on the cylinder assembly.

To assemble the three components of the docking port, the cylinder assembly and lower ring were chilled in liquid nitrogen. The lower ring was removed from the chill tank and installed on the fiberglass cylinder. The cylinder assembly was assembled to the fiberglass cylinder in a like manner. The axial cylinder assembly was drilled at the fiberglass cylinder mating surfaces and mechanical fasteners installed. The axial cylinder assembly lower ring was drilled using a drill jig coordinated to the MDA bulkhead mating hole pattern. The axial cylinder assembly was then positioned and indexed on a positioning and holding fixture and the drogue fitting holes drilled and fasteners installed.

8.2.7.2 Radial Docking Port

The Radial Docking Port Assembly consisted of, from outboard to inboard end, a cylinder assembly, fiberglass cylinder and a lower ring. Both cylinders and the lower ring, while not identical to the comparable parts on the axial docking port, were manufactured in a similar manner. Assembly of the Radial Docking Port was accomplished in the same manner described for the Axial Docking Port.

8.2.8 Manufacture and Assembly of Pressure Vessel Details

The Pressure Vessel contained the following lesser assemblies that were manufactured using conventional machine tools and methods:

- Transition Ring
- Hatch Ring
- Electrical Umbilical
- Longerons and Longeron Angles

8.2.9 Final Assembly of the Pressure Vessel Assembly

Final assembly commenced with the Pressure Vessel Structural Assembly positioned flight direction down on the assembly drill fixture. The Longeron Angles were positioned and match drilled through the pressure vessel skin. After drilling, the angles were removed, cleaned and sealant applied between the mating surfaces; they were then repositioned and mechanical fasteners installed. The Longerons were then positioned on the Longeron Angles, drilled, and then secured to the Longeron Angles with mechanical fasteners. Clips and splice plates were drilled and mechanical fasteners installed to secure the longerons to the internal rings. Special EREP fittings were installed. The vent manifold, the S192 mounting plate and the electrical umbilical plate were also installed. After drilling and reaming, the parts were removed, deburred, cleaned and sealant applied to the mating surfaces prior to installing with mechanical fasteners.

The Axial Docking Port Hatch Ring Assembly was positioned inside the bulkhead and a coordinated drill jig was positioned outside the bulkhead centered about the Docking Port hole; then all items were properly aligned and clamped into place. Holes were match drilled through the bulkhead ring adapter assembly and hatch ring. Sealant was applied before positioning the axial docking port and installing mechanical fasteners.

The Radial Docking Port Transition Ring was positioned inside the Pressure Vessel after sealant had been applied between the mating surfaces and then the mechanical fasteners were installed. The radial docking port cylinder was then indexed and positioned inside the transition ring, using a sealant between the surfaces and the mechanical fasteners installed. The radial docking port was installed by applying sealant to the mating surfaces and "slipping" the docking port lower ring inside the previously installed transition ring. Mechanical fasteners were then installed.

All openings in the shell were blocked off and the assembly was pressure tested. The pressure vessel was then shipped to MMC-Denver.

8.3 MANUFACTURING TECHNIQUES

8.3.1 Mechanical Details/Subassembly Fabrication

A. Detail Parts - Detail parts for the MDA were fabricated by Detail Manufacturing in the machine shop and sheet metal shop, with the exception of some nonmetallic items. A special nonmetals fabrication area was set up utilizing a plastic bubble enclosure to maintain proper cleanliness requirements. The production area was located adjacent to the engineering nonmetals lab to take advantage of existing autoclave facilities. All new process development, tool certification, and production fabrication were performed under the leadership of Advance Manufacturing Technology personnel. All details were routed through the detail fabrication area using the existing scheduling and movement system. All detail parts were fabricated using conventional metal-forming capabilities.

B. Subassemblies - Subassemblies were welded in existing welding facilities. They were drilled, temporarily bolted together, disassembled, deburred, cleaned, plastic-bagged, and sent to the Space Support Building for final installation.

8.3.2 Insulation Blanket Fabrication

During the course of development of the multilayer thermal insulation segments for the MDA (approximately 108), the following fabrication techniques were developed:

- Designed and effectively used a tool to stack the laminated insulating layers (aluminized mylar sheet and dacron net fabric) to the required 181 layers. This process not only reduced "lay-up" man hours by 150 percent, but provided a superior lamination of materials.

- Utilized teflon buttoneers (nee, Swiftachments) in lieu of sewing thread to tie the multilayers together in a grid pattern. This method decreased the fabricating costs and improved the thermal characteristics of the insulation segments.

- Utilized a motorized trimming knife (same as that used by cloth cutters in the garment industry), permitting cutting beveled edges on the multilayer insulation segments to provide maximum contour coverage.

8.3.3 MDA Structural Assembly

Final assembly and installation work on the MDA was essentially divided into two phases: (1) Activities in the Factory; and (2) Activities in the High Bay area of the Space Support Building. The activities in the factory also included operations which required moving the MDA to various locations outside of the factory. (See Figure 8.3-1)

Because of the numerous moves required, and the possibility of damage occurring during these moves, considerable attention was directed at eliminating as much risk as possible. From the receipt of the MDA at Buckley Airfield in Denver, all moves of the MDA were controlled by Manufacturing Engineering Procedures. These documents outlined in detail each step required for every movement of the MDA, whether from one location to another, or merely a change in position. Prior to the issuance of the documents, they were approved by Safety, Quality, Engineering and Manufacturing Engineering. These same precautions were taken with the experiment hardware that was supplied as GFE. The Manufacturing Engineering Procedure was also presented to the experimenter for his review and approval. During the period that these procedures were in use, there were no incidents of hardware damage.

The MDA was received at Buckley Field, Denver, and transported to the second floor of the factory where it was placed in the vertical position for Receiving Inspection (Figure 8.3-2). Scaffolding was then installed and the factory installations initiated. The vertical orientation was selected for this installation effort to reduce the complexity and cost of supporting equipment. The installations in the factory were drilled and fastened in place, or drilled and removed for future installation in the Space Support Building. All details were cleaned to the required level, bagged and sent to the Space Support Building (SSB).

FOLDOUT FRAME

POSITION 1
UNLOADING OPERATIONS

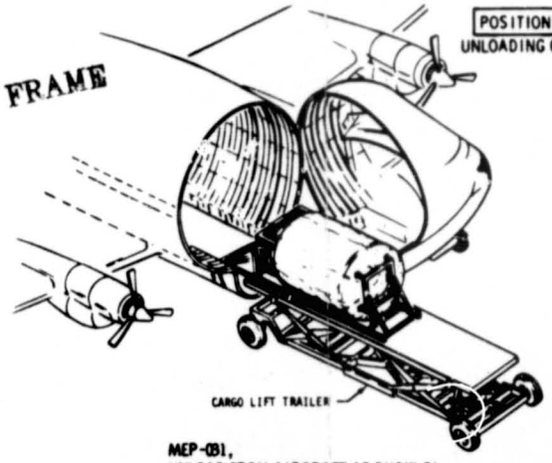

MEP-031,
UNLOAD FROM AIRCRAFT AT BUCKLEY

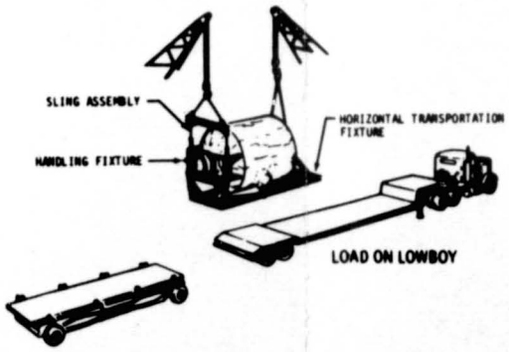

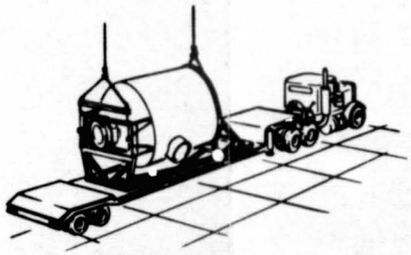

TRANSPORT TO FACTORY FOR
RECEIVING INSPECTION

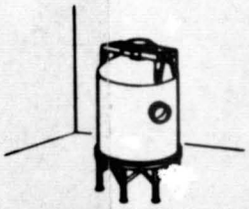

MEP-032,
PLACE ON VERTICAL WORKSTAND

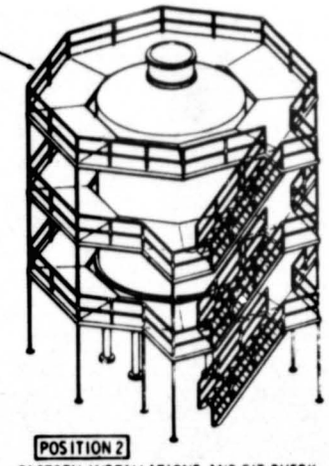

POSITION 2
FACTORY INSTALLATIONS AND FIT CHECK

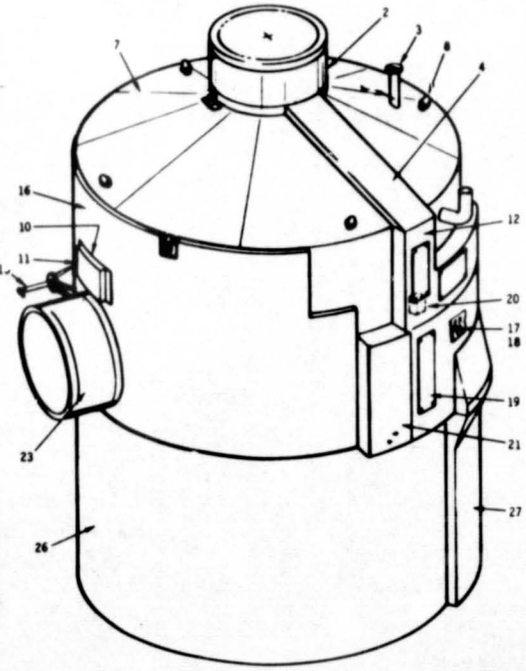

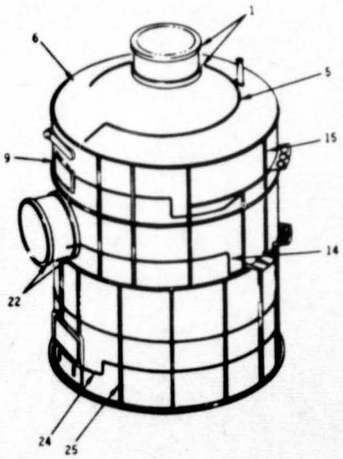

EXTERNAL ARRANGEMENT

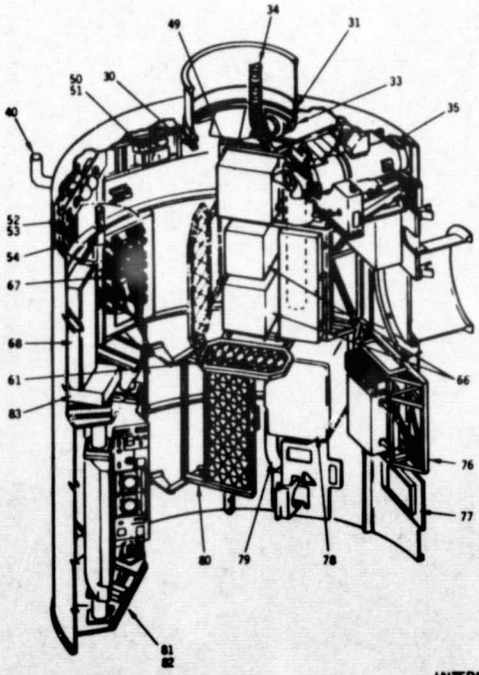

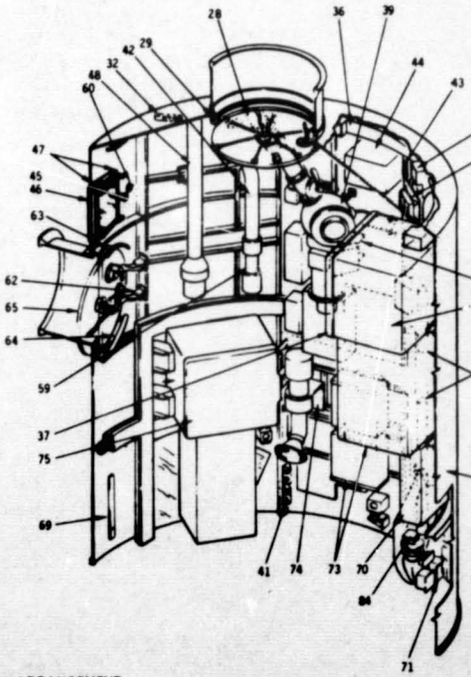

INTERNAL ARRANGEMENT

Legend:
▲ In
● In

FOLDOUT FRAME 2

POSITION 3
HORIZONTAL CLEANING

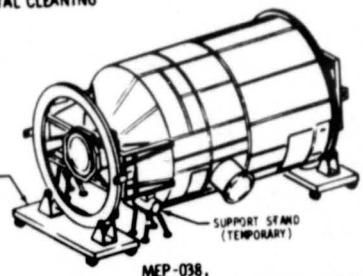

MEP-038,
POSITION HORIZONTAL FOR CLEANING

Legend:

▲ Installed, Drilled, and Fastened in Place

● Installed, Drilled, but Removed for Installation in SSB

(EXTERNAL CONE SECTION)

- ▲ 1. DOCKING PORT METEOROID PANEL STANDOFFS
- ● 2. DOCKING PORT METEOROID PANEL
- ▲ 3. DOCKING TARGET TRUSS
- ● 4. UMBILICAL DUCT CONE
- ▲ 5. CONE INSULATION PURGE SYSTEM
- ▲ 6. METEOROID PANEL STANDOFFS (15)
- ● 7. METEOROID PANEL
- ▲ 8. RUNNING LIGHTS (4)

(EXTERNAL UPPER HALF)

- ▲ 9. WINDOW COVER STANDOFF
- ▲ 10. WINDOW HEATER CONTROL BOX
- ▲ 11. WINDOW COVER ATTACHMENT
- ● 12. UPPER HALF UMBILICAL DUCT
- ▲ 13. DOCKING TARGET TRUSS
- ▲ 14. UPPER HALF INSULATION PURGE SYSTEM
- ▲ 15. UPPER HALF METEOROID PANEL STANDOFFS
- ● 16. UPPER HALF METEOROID PANEL & RADIATOR PANEL
- ▲ 17. HARNESS CLIPS, ANGLES, & SUPPORTS
- ▲ 18. SIGNAL CONDITIONER PROVISION MOUNTING
- ▲ 19. POWER DISTRIBUTOR PROVISION
- ▲ 20. SIGNAL CONDITIONER FILTER PROVISION
- ● 21. ELECTRICAL COMPONENT COVER PROVISION

(EXTERNAL LOWER HALF)

- ▲ 22. DOCKING PORT METEOROID PANEL STANDOFFS
- ● 23. DOCKING PORT METEOROID PANEL
- ▲ 24. LOWER HALF INSULATION PURGE SYSTEM
- ▲ 25. LOWER HALF METEOROID PANEL STANDOFFS
- ● 26. LOWER HALF RADIATOR PANEL
- ● 27. LOWER HALF UMBILICAL DUCTS

(INTERNAL FIRST-LEVEL CONE)

- ● 28. PRESSURE HATCH
- ▲ 29. PRESSURE HATCH STOWAGE FITTINGS
- ▲ 30. DOCKING PORT HANDRAILS & SUPPORTS
- ▲ 31. DOCKING PORT HEATER SUPPORT
- ▲ 32. INTERIOR LIGHT BRACKETS (4)
- ▲ 33. ECS DOME FAN SUPPORT ASSEMBLY
- ● 34. ECS FLEX DUCT STOWAGE
- ▲ 35. INTERIOR LIGHT SWITCH BRACKET
- ● 36. DOME CABLE COVER

(INTERNAL FIRST LEVEL)

- ● 37. FILM VAULT NO. 4
- ● 38. FORWARD ASSEMBLY, ECS BRANCHING DUCT
- ▲ 39. MS12 UPPER MOUNTING BRACKETS
- ● 40. MS12 VENT PIPE
- ▲ 41. UTILITY POWER OUTLET
- ● 42. 5.20 DIA DUCT TO AREA FAN
- ▲ 43. WALL HEATER
- ▲ 44. IR SPECTROMETER INNER MOUNTING PLATE
- ▲ 45. S190 WINDOW FRAME
- ● 46. LATCHING MECHANISM, WINDOW COVER
- ▲ 47. S190 CAMERA MOUNT FITTINGS (4)
- ● 48. 5.20 DIA ECS DUCT TO DOME FAN
- ▲ 49. EREP RACK NO. 1 MOUNTING
- ▲ 50. S009 NUCLEAR EMULSION EXPERIMENT MOUNTING FITTINGS
- ● 51. S009 EXPERIMENT TRUSS
- ● 52. VENT VALVE PLATE
- ● 53. VENT VALVE ATTACHMENT FITTINGS
- ▲ 54. ELECTRICAL UMBILICAL CONNECTOR PENETRATIONS

(INTERNAL SECOND LEVEL)

- ● 55. FILM VAULT NO. 1
- ● 56. CENTER SECTION, ECS BRANCHING DUCT
- ▲ 57. INTERCOM MOUNTING BRACKET
- ▲ 58. MS12 EXPERIMENT PACKAGE BASE
- ▲ 59. AREA FAN NO. 2 MOUNTING PROVISION
- ▲ 60. WINDOW HEATER SWITCH BRACKET
- ● 61. MS12 FOOT RESTRAINT PLATFORM
- ▲ 62. DOCKING PORT STOWAGE PROVISION
- ▲ 63. DOCKING PORT HEATER SUPPORT
- ▲ 64. DOCKING PORT HANDRAILS & SUPPORTS
- ● 65. DOCKING PORT HATCH
- ▲ 66. EREP RACK NO. 2 MOUNTING FITTINGS
- ▲ 67. ATM ELECTRICAL CONNECTOR PENETRATIONS
- ● 68. CO_2 ABSORBER STORAGE CONTAINER

(INTERNAL THIRD LEVEL)

- ▲ 69. WALL HEATERS (8)
- ● 70. MISCELLANEOUS STOWAGE BOX
- ▲ 71. LOWER SECTION, ECS DUCT
- ▲ 72. LIGHT ASSEMBLIES ON ECS DUCT (3)
- ▲ 73. S082A & S082B FILM CANISTER MOUNTING PROVISION
- ▲ 74. AREA FAN SUPPORT ASSEMBLY
- ● 75. FILM VAULT NO. 2
- ▲ 76. EREP RACK NO. 3 MOUNTING FITTINGS
- ▲ 77. 10-BAND MULTISPECTRAL SCANNER MTG PLATE & STUB FRAME
- ● 78. FILM VAULT NO. 3
- ● 79. MOLECULAR SIEVE DUCT (4-IN. DIA)
- ● 80. ATM CONSOLE FOOT RESTRINT
- ▲ 81. ATM C&D CONSOLE ATTACHMENTS
- ▲ 82. FITTINGS & BRACKETS, CONSOLE
- ● 83. FLIGHT DATA FILE CONTAINER
- ▲ 84. FIRE EXTINGUISHER MOUNTING PROVISION

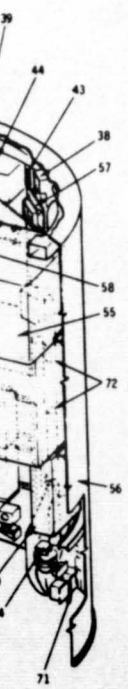

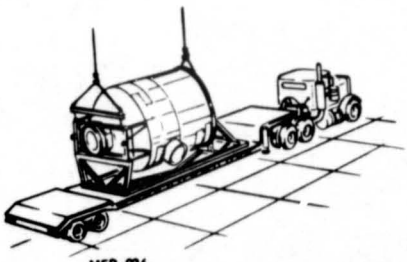

MEP-036
INSTALL MDA IN TRANSPORTATION FIXTURE

POSITION 4
PROOF PRESSURE AND LEAK TEST

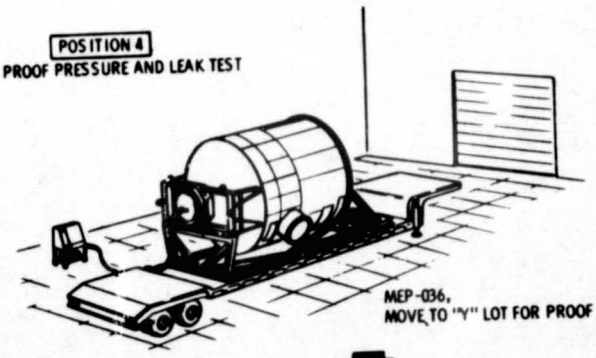

MEP-036,
MOVE TO "Y" LOT FOR PROOF AND LEAK TEST

TRANSPORT TO X-RAY FACILITY

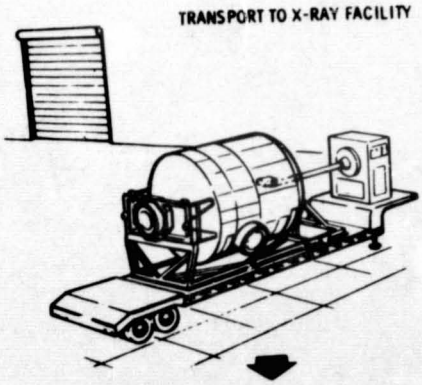

POSITION 5
X-RAY FACILITY

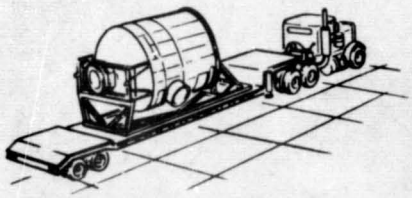

TRANSPORT TO FACTORY, SECOND FLOOR

POSITION 7
HYDROSTATIC T
FACILITY

REPRODUCIBILITY OF THE ORIGINAL PAGE IS POOR

FOLDOUT FRAME 3

POSITION 6
CLEAN AND PAINT

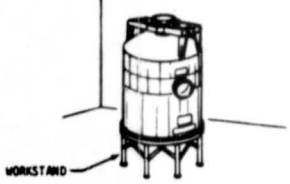

MEP-032,
PLACE ON WORKSTAND
VERTICAL

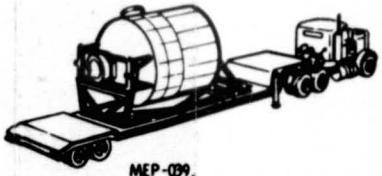

MEP-039,
POSITION HORIZONTAL AND
TRANSFER TO HYDRO

POSITION 7
HYDROSTATIC TEST
FACILITY

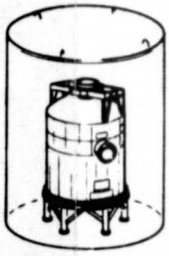

DRY AND BAKE PAINT

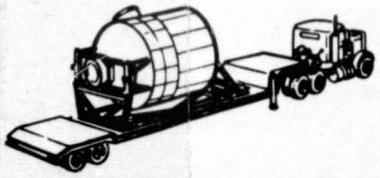

TRANSPORT TO SPACE SUPPORT BUILDING (SSB)
CLEAN ROOM

POSITION 8
SSB AIRLOCK

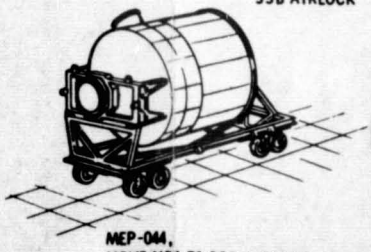

MEP-044,
MOVE MDA TO SSB AIRLOCK
AND ONTO MOVEMENT DOLLY

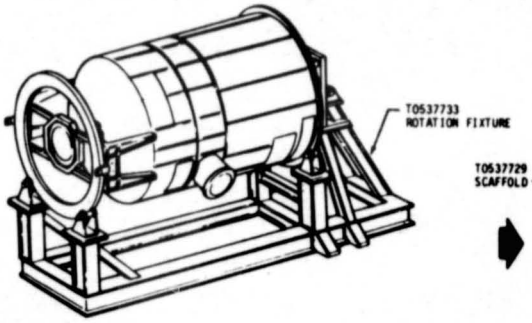

POSITION 9
HORIZONTAL WORK POSITION

MEP-047,
MOVE FROM SSB AIRLOCK TO CLEAN ROOM
AND ONTO TRUNNION ROTATION FIXTURE

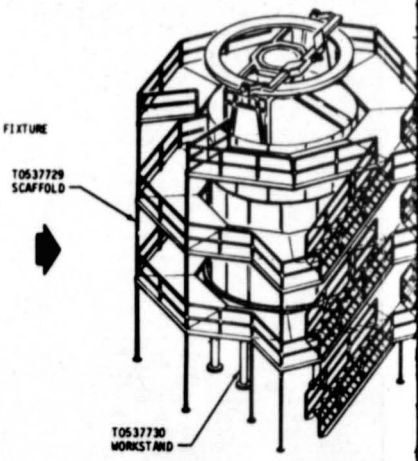

MEP-048,
PLACE MDA ON VERTICAL WORKSTA

MEP-051
ATTACH FORWARD HANDLING FIXTU
AND ROTATION RING

POSITION 10
VERTICAL WORKSTAND

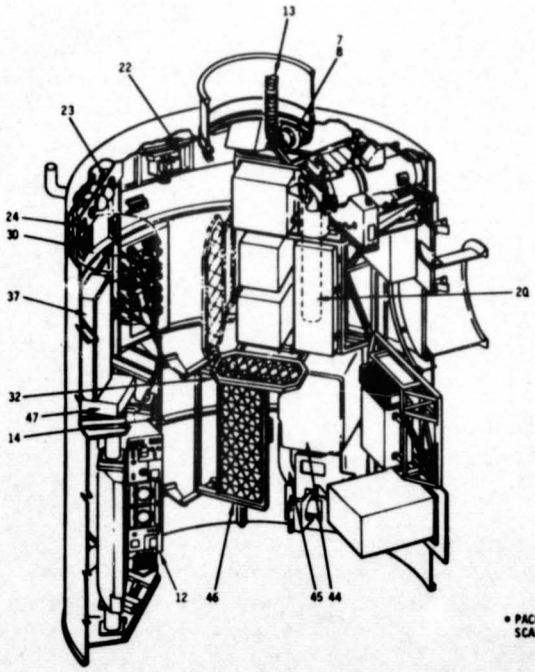

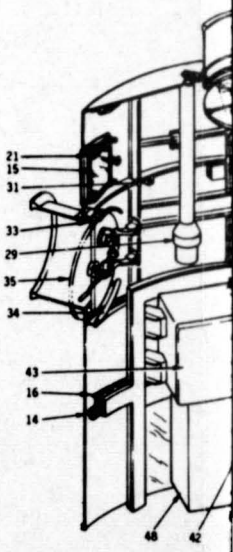

• PACKAGE-HANDLING FIXTURE KIT AND INTERIOR SCAFFOLDING FIT CHECK (CFE DELIVERABLE)

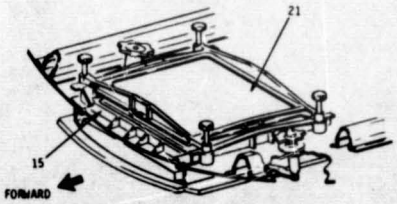

S190 WINDOW

(EXTERNAL REFERENCE ONLY)
1. SIGNAL CONDITIONER
2. POWER DISTRIBUTORS (4)
3. INVERTER/LIGHTING CONTROL ASSEMBLY
4. DOCKING TUNNEL HEATER
5. ELECTRICAL HARNESS INSTALLATION
6. RUNNING LIGHTS

(INTERNAL CONE)
7. DOME FAN MUFFLER SUPPORT ASSEMBLY
8. MUFFLER & FAN
9. ENTRY LIGHT SWITCH & INTERIOR LIGHTS (4)
10. DOCKING PORT HEATER THERMOSTAT
11. DOCKING PORT HANDRAILS (2)
12. ATM CONTROL & DISPLAY PANEL
13. FLEX DUCT
14. WIRE HARNESS IN CABLE TRAYS

(INTERNAL FIRST LEVEL)
15. S190 SAFETY SHIELD
16. WALL HEATERS (8)
17. FILM VAULT NO. 4
18. UPPER ECS BRANCHING DUCT ASSEMBLY
19. UTILITY POWER OUTLET
20. ECS DUCT
21. S190 WINDOW
22. S009 EXPERIMENT
23. VACUUM VENT VALVES & PLUGS
24. TRANSDUCER, DIFFERENTIAL PRESSURE

FOLDOUT FRAME

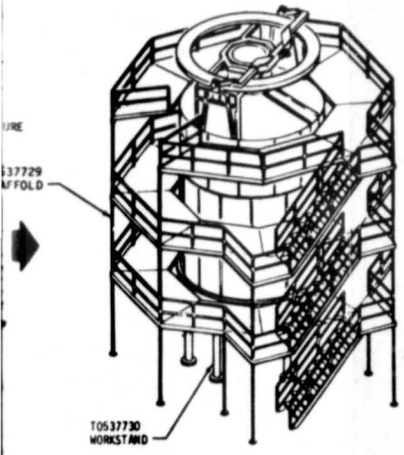

MEP-048,
PLACE MDA ON VERTICAL WORKSTAND

MEP-051
ATTACH FORWARD HANDLING FIXTURE
AND ROTATION RING

POSITION 10
ICAL WORKSTAND

POSITION 11
HUGHES ANALYZER TESTS

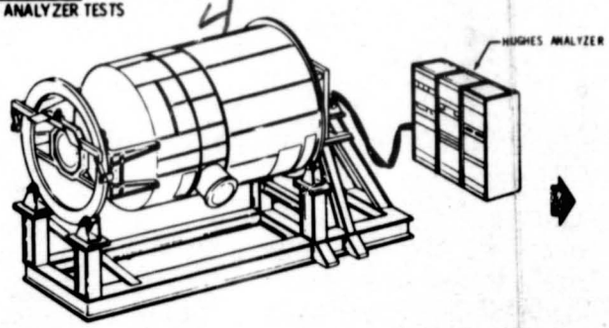

MEP-054,
POSITION HORIZONTAL FOR

POSITION 12
MDA SUBSYSTEM TESTS

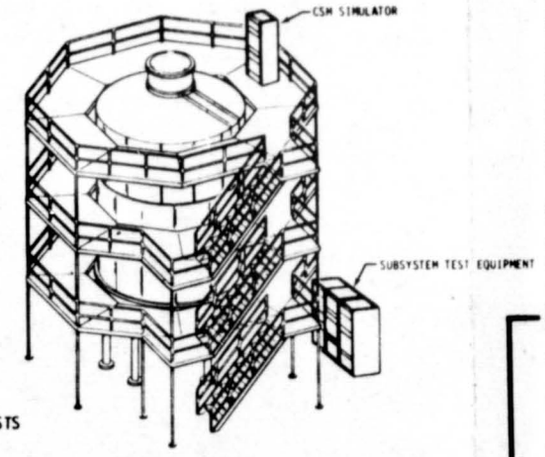

MEP-048,
PLACE MDA ON VERTICAL WORKSTAND

POSITION 13
HORIZONTAL MECHANICAL TESTS

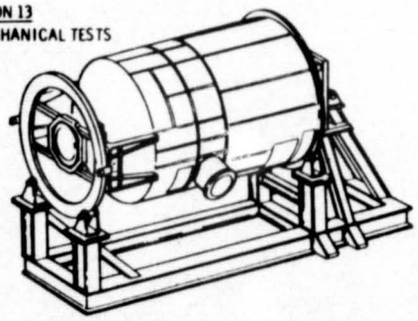

MEP-052,
POSITION HORIZONTAL FOR MECHANICAL TESTS

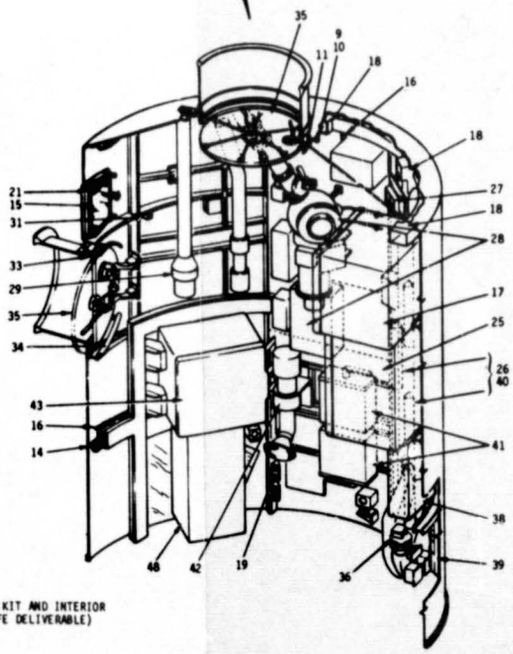

CKAGE-HANDLING FIXTURE KIT AND INTERIOR
CAFFOLDING FIT CHECK (CFE DELIVERABLE)

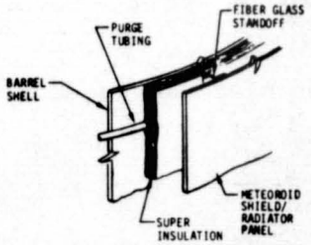

VIEW OF INSULATION BLANKET

MDA/EREP INSTALLATION

1. L-BAND ANTENNA (S194)
2. INVERTER - LIGHTING CONTROL ASSEMBLY (ILCA)(Ref)
3. PROTON SPECTROMETER
4. IR SPECTROMETER (S191)
5. MULTISPECTRAL SCANNER (S192)
6. VIEWFINDER/TRACKING SYSTEM
7. MULTISPECTRAL PHOTOGRAPHIC FACILITY (S190)
8. REDUNDANT TAPE RECORDER (Ref)
9. CONTROL AND DISPLAY PANEL
10. TAPE RECORDER
11. MULTISPECTRAL SCANNER (S192)
12. MICROWAVE/SCATTEROMETER/ALTIMETER/ RADIOMETER (S193)
13. L-BAND TRUSS
14. STOWAGE CONTAINER (S190)

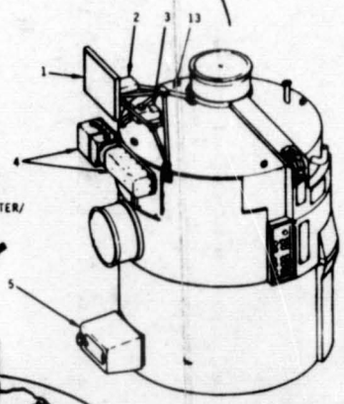

POSITION 14
EREP INSTALLATIONS
EXTERNAL INSTALLATIONS
EREP CHECKOUT AND SYSTEMS TESTS
FIT CHECK EXTERNAL SEALING BAG
EXTERNAL PROTECTIVE COVER INSTALLATIONS
FINAL SPACECRAFT LEAK TEST

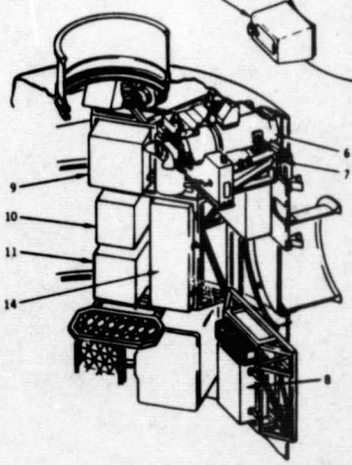

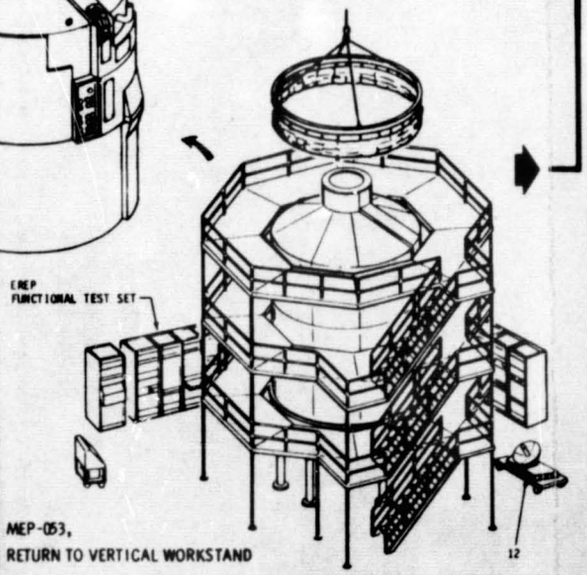

MEP-053,
RETURN TO VERTICAL WORKSTAND

(EXTERNAL REFERENCE ONLY)
1. SIGNAL CONDITIONER
2. POWER DISTRIBUTORS (4)
3. INVERTER/LIGHTING CONTROL ASSEMBLY
4. DOCKING TUNNEL HEATER
5. ELECTRICAL HARNESS INSTALLATION
6. RUNNING LIGHTS

(INTERNAL CONE)
7. DOME FAN MUFFLER SUPPORT ASSEMBLY
8. MUFFLER & FAN
9. ENTRY LIGHT SWITCH & INTERIOR LIGHTS (4)
10. DOCKING PORT HEATER THERMOSTAT
11. DOCKING PORT HANDRAILS (2)
12. ATM CONTROL & DISPLAY PANEL
13. FLEX DUCT
14. WIRE HARNESS IN CABLE TRAYS

(INTERNAL FIRST LEVEL)
15. S190 SAFETY SHIELD
16. WALL HEATERS (8)
17. FILM VAULT NO. 4
18. UPPER ECS BRANCHING DUCT ASSEMBLY
19. UTILITY POWER OUTLET
20. ECS DUCT
21. S190 WINDOW
22. S009 EXPERIMENT
23. VACUUM VENT VALVES & PLUGS
24. TRANSDUCER, DIFFERENTIAL PRESSURE

(INTERNAL SECOND LEVEL)
25. FILM VAULT NO. 1
26. INTERIOR LIGHT (1)
27. INTERCOM BOX (2)
28. M512 EXPERIMENT COMPLETE
29. FAN & MUFFLERS
30. DOCKING PROBE STOWAGE PROVISION
31. WINDOW HEATER CONTROL BOX
32. M512 FOOT RESTRAINT PLATFORM
33. DOCKING PORT HEATER
34. DOCKING PORT HANDRAIL
35. DOCKING PORT HATCH (2)
36. FIRE EXTINGUISHER
37. CO_2 ABSORBER CONTAINER

(INTERNAL THIRD LEVEL)
38. MISCELLANEOUS STOWAGE BOX
39. 4-IN. DIA LOWER ECS DUCT ASSEMBLY
40. LIGHT ASSEMBLIES
41. S082A & S082B FILM CANISTER (FIT CHECK ONLY)
42. FAN & MUFFLERS
43. FILM VAULT NO. 2
44. FILM VAULT NO. 3
45. MOLECULAR SIEVE DUCT
46. ATM CONSOLE FOOT RESTRAINT PLATFORM
47. FLIGHT DATA FILE CONTAINER
48. M168 STS MISCELLANEOUS STOWAGE CONTAINER

REPRODUCIBILITY OF THE ORIGINAL PAGE IS POOR

FOLDOUT FRAME 5

TEM TEST EQUIPMENT

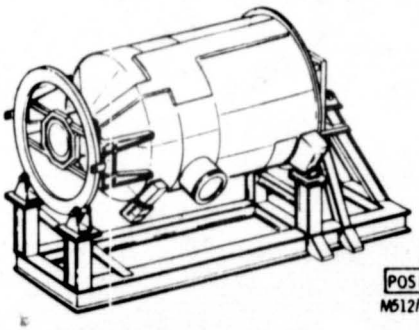

POSITION 15
M512/M479 TEST

MEP-052,
POSITION HORIZONTAL TEST

POSITION 16
ROTATE AND CLEAN

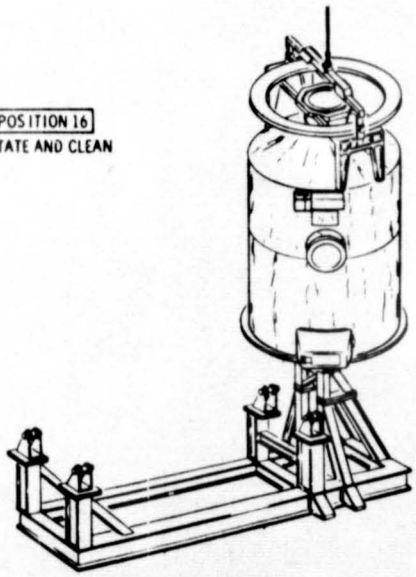

ATIONS

12

POSITION 17
VERTICAL C^2F^2

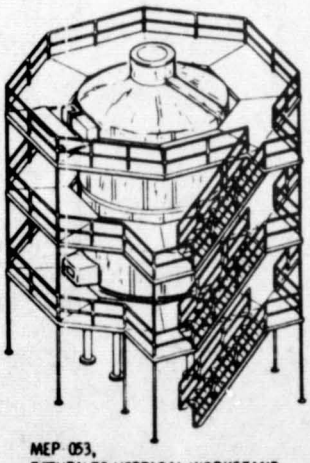

MEP-053,
RETURN TO VERTICAL WORKSTAND
DEBRIS SHIELD INSTALLATION
PLUG LONGERON HOLES
TOUCH UP PAINT AND FINISHES

POSITION 18
HORIZONTAL C^2F^2

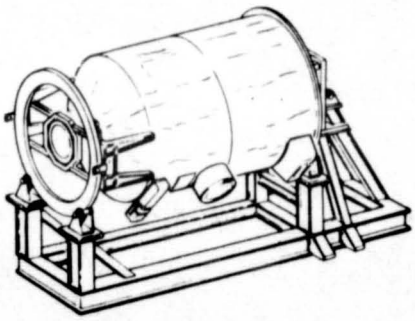

MEP-052,
POSITION HORIZONTAL

POSITION 19

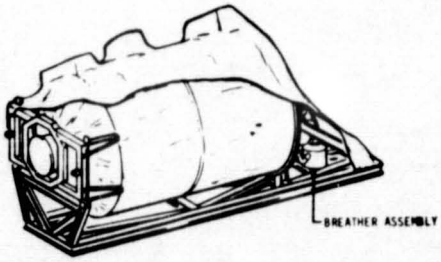

MEP-054,
FIT CHECK OUTER SHIPPING COVER
AND DESICANT

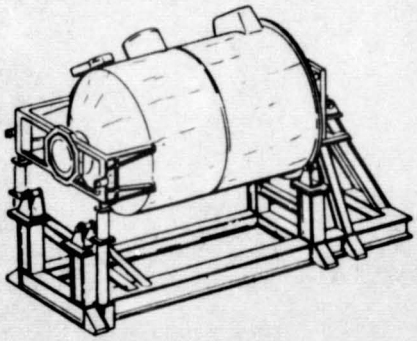

MOVE MDA ONTO ROTATION FIXTURE

FOLDOUT FRAME

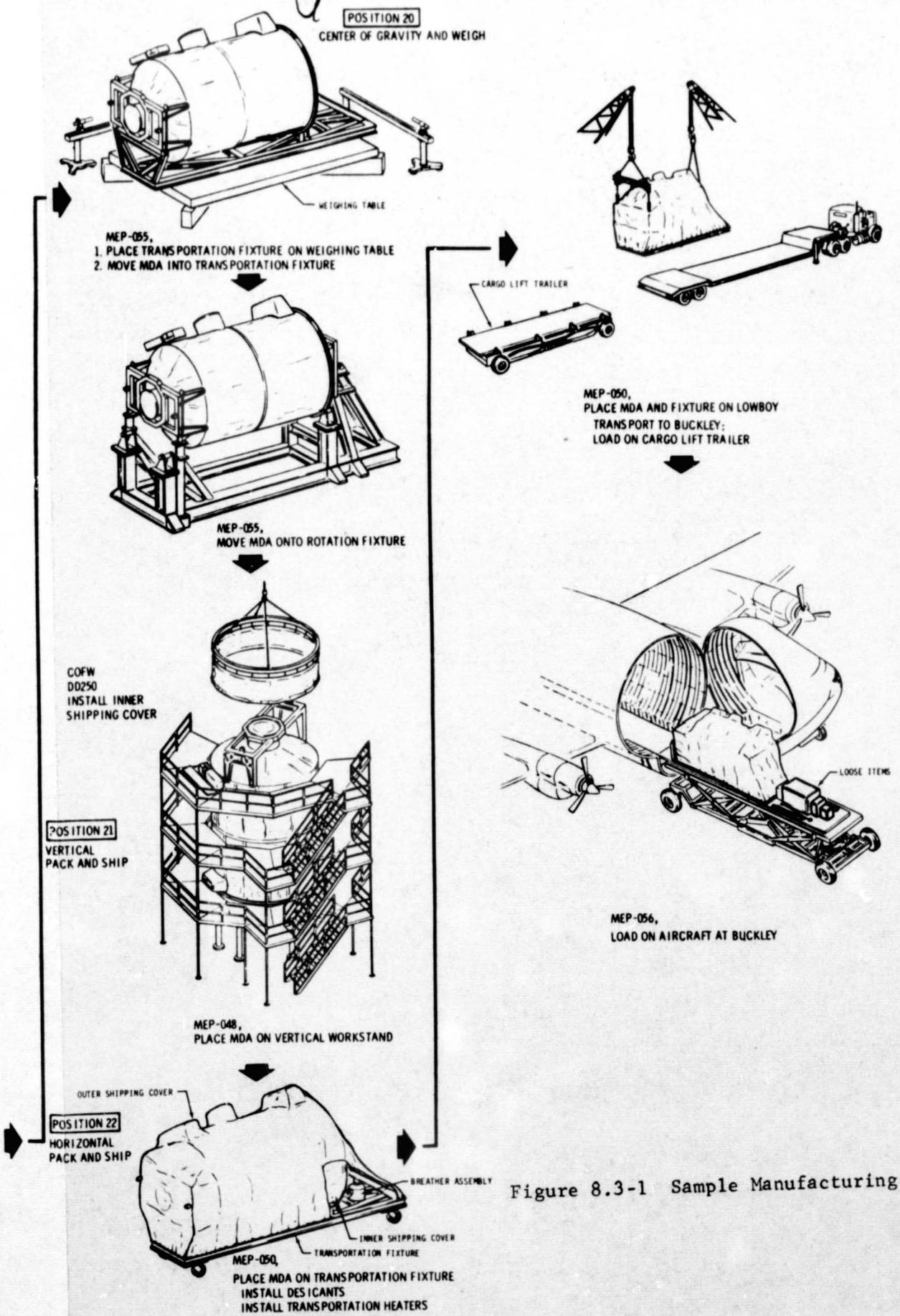

Figure 8.3-1 Sample Manufacturing Flow

After completion of the drilling and installation effort, the MDA was placed in a horizontal rotation fixture for rough cleaning. This consisted of rotating the MDA to loosen chips and then vacuum cleaning. It was then placed on a low boy and moved to the Leak Test Facility (LTF) for proof and leak test. From the LTF it went to X-ray, and from there back to the vertical work stand on the second floor factory. A "scotch-brite" operation was then performed to prepare the surface for painting. All openings were sealed, after the "scotch-brite", and the MDA was moved to the Hydrostatic Test Facility for flush irriditing. It then came back to the second floor factory for painting. During painting of the interior a special ventilating system was installed to vent the fumes to the outside of the building. The painting was performed in the vertical work stand on the factory floor. Following completion of an air-cure cycle it was moved to the Hydrostatic Test Facility for a bake cycle.

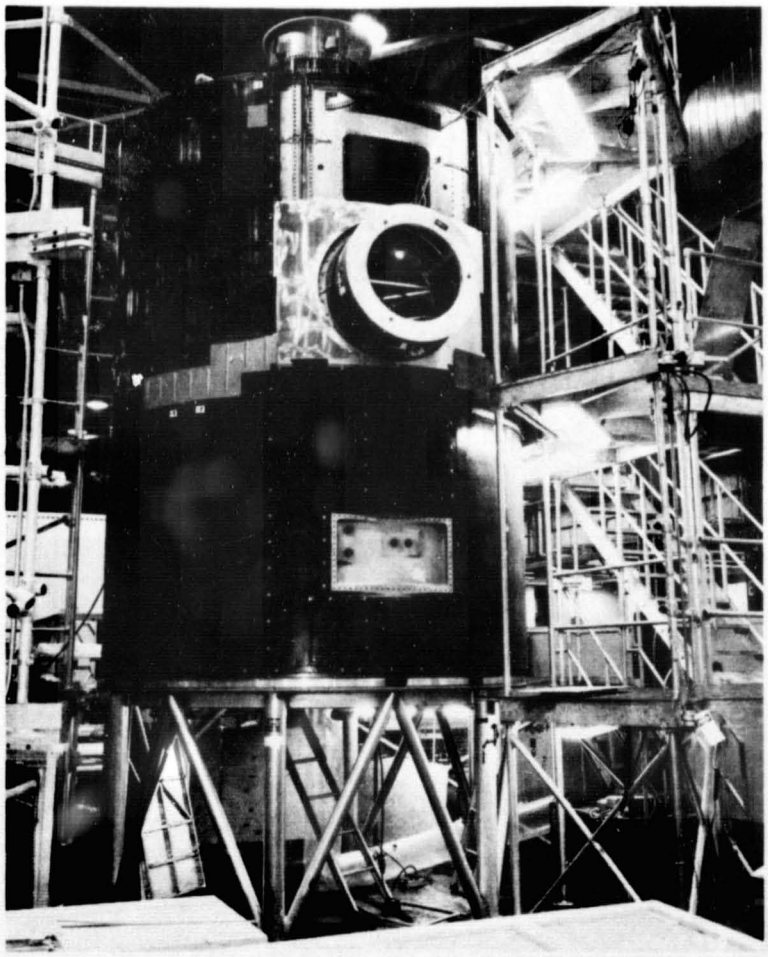

Figure 8.3-2 MDA Installed in Factory

REPRODUCIBILITY OF THE ORIGINAL PAGE IS POOR

The MDA was placed in the horizontal holding fixture after paint cure; bagged and moved to the Space Support Building (Clean Room) for the remaining installations (see Figure 8.3-2). A controlled access system was set up after erection of the MDA on the vertical work stand in the Space Support Building high bay. This system effectively controlled and accounted for all personnel and equipment required in and around the MDA during Clean Room activities. A weight control system was also initiated at this time which accounted for the weight of all hardware being installed and removed from the MDA.

During the handling and installation of experiments such as EREP, the manufacturing engineer worked closely with the representative of the company involved to insure that the intent of the manufacturing engineering procedure was met.

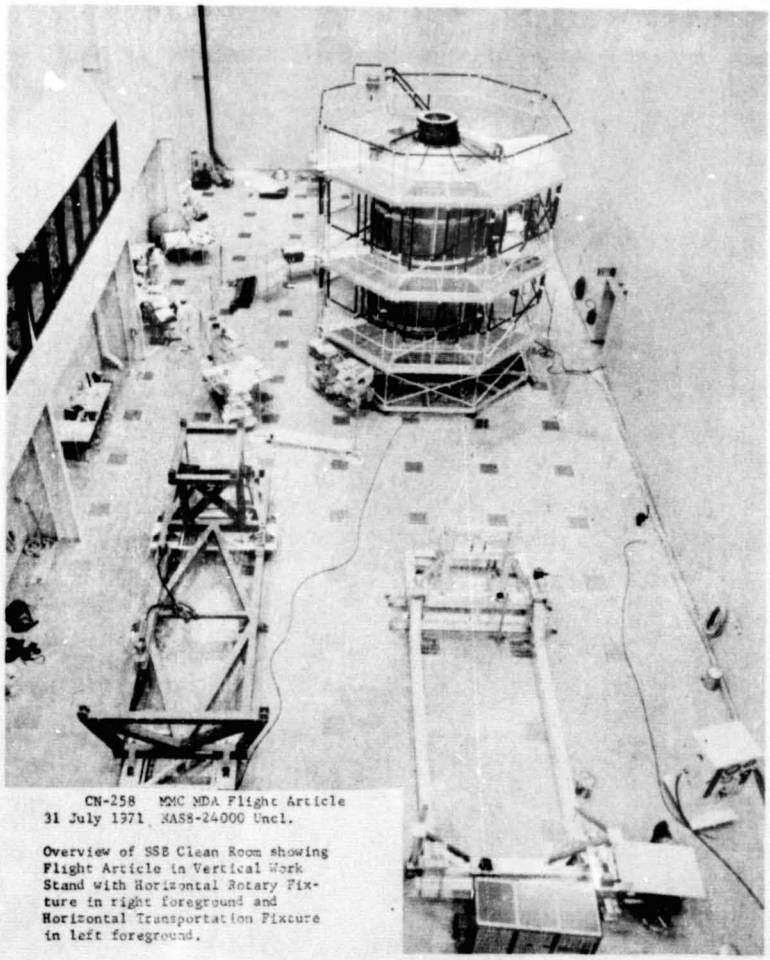

CN-258 MMC MDA Flight Article
31 July 1971 NAS8-24000 Uncl.

Overview of SSB Clean Room showing Flight Article in Vertical Work Stand with Horizontal Rotary Fixture in right foreground and Horizontal Transportation Fixture in left foreground.

Figure 8.3-3 MDA Installed in SSB

REPRODUCIBILITY OF THE ORIGINAL PAGE IS POOR.

Debris shields were developed by making patterns from mylar sheets and then developing engineering drawings to match. These shields were required to keep hardware from being lost in inaccessible places under a zero-G condition.

The MDA was weighed prior to placing it in a "double bag" for shipment to St. Louis. The "double bag" protection consisted of an inner and outer cover, as illustrated in Figure 2.2.11.2-2. The preparation for shipment was as follows.

Prior to the movement of any of the modules to or from the airport, a trial run was made over the designated route to check for inadequate clearance, crane heights, or other similar problems.

A team at the Martin Marietta-Denver facility supported the St. Louis effort by supplying modification kits as required by the latest engineering. These kits were in all cases complete, and when required, manufacturing personnel were sent to St. Louis to assist in the installation.

8.3.4 Electrical Fabrication/Installation

Process plans were prepared using the Automated Electrical Manufacturing Engineering (AEME) system. Utilizing the Automated Wiring System (AWS) in conjunction with AEME, process plans were produced for both subassembly and harness assembly builds.

Fabrication of the production harness began at the subassembly level at the Electronics Manufacturing Facilty clean room. The subassemblies were then checked for Level JA cleanliness, double-bagged, and routed to the Space Support Building for installation into harness assemblies. The harness assemblies were fabricated in two areas and phases. Cable assemblies and small harnesses were built on mylar overlays in the clean room low bay area. The larger internal harness was assembled in the three-dimensional harness fixture. The external harness was assembled on overlays. Connectors that were encapsulated were continuity and megger-tested prior to installation into the harness. After completion of the harnesses, electrical tests were performed using the Hughes Analyzer. All harnesses were then weighed, recorded and installed in the Flight Article,

using installation plans supplied by manufacturing engineering. The total wiring system was then completely continuity-tested and megger-tested using the Hughes Analyzer.

All personnel engaging in the electrical fabrication and installation work effort were required to be certified in clean room operations, connector mate-demate operations, soldering and connector assembly techniques. Technical and liaison support were furnished by manufacturing engineering throughout all phases of the harness build and installation efforts.

8.3.5 Manufacturing Processes/Procedures

Twenty-one new manufacturing processes were developed, and approximately sixty more revised, to support the MDA program. Forty-four Manufacturing Engineering Procedures were written to define the movement of the MDA and the handling and installation of all GSE items. The effectivity of this system is best illustrated by the number of movement and handling operations performed with minimal hardware damage resulting.

8.3.6 Ground Support Equipment (GSE)

Ground Support Equipment was fabricated at Martin-Denver in both the Electronics Manufacturing Facility and the factory. All fabricated items were built to Form 4 engineering for use on the Flight, Flight Backup, Dynamic Test, and One-G Trainer, from acceptance at Denver through certain prelaunch activities at KSC.

The handling and installation of experiments and equipment, both external and internal to the MDA, required the use of various combinations of GSE. Some equipment could be used to install experiments when the MDA was either vertical or horizontal, and other equipment was designed to be used in one specific position.

Each item of GSE used for lifting experiments had an identification tag attached specifying the maximum load capacity.

There were approximately 87 pieces of GSE of varying degrees of complexity fabricated on the MDA program.

8.3.7 Personnel Staffing

Manufacturing operations began during the initial proposal stage. A Skylab Project Representative was assigned to lead a

team of Manufacturing and Industrial Engineers responsible for developing the total manufacturing flow plan. This plan and the contract statement of work were utilized to define and estimate the requirements for facilities, tooling, processes, and total fabrication and support. Pre-production engineers, assigned full time to the program, worked with the design engineers to define the manufacturing tasks to be performed. They provided producibility inputs to the designer and kept him informed of manufacturing techniques and capabilities.

The pre-production engineer assisted manufacturing control by identifying advanced material requirements and long-lead items. He also supported tool design and tool fabrication planning by identifying long-lead tooling material and standards. The pre-production engineer also identified fabrication sequences that formed the basis for time-phased work. He established a manufacturing flow plan controlled by a numbering system that provided the control media for the scheduling of parts, tools and materials.

During the pre-production phase, all major tools were identified and tool orders issued to permit tool design to start initial design and order material. This design effort was accomplished by making use of the Central Tool Design Shop.

Process planning was accomplished in the initial stage of the program by planners from the central planning shop. However, in the later stages of installation and test in the Space Support Building, planners were assigned to work full time on the MDA program. Noticeable improvement in the turnaround time on change traffic resulted from having process planners, quality and engineering personnel assigned to the program and located in a dedicated area.

9. MDA PROGRAM CONTROLS

9.1 PLANNING AND SCHEDULING

MDA planning and scheduling was carried out at both the Project and the department levels.

Project level planning translated the MDA program hardware and documentation requirements into the actions necessary to satisfy these requirements. Planning meetings at the Project level defined and clarified the efforts of all departments and produced coordinated master schedules reflecting the time-phasing of these efforts. These master schedules were published as direction from the Program Manager to the Project Organization. The planning meetings also produced the information necessary to establish schedules for Government Furnished hardware and data and a GFP hardware and data log was published and maintained by the Project, and used as the basis for GFP schedule coordination with the NASA MSFC.

Department level planning further defined and detailed the effort necessary to satisfy program requirements. These plans were derived from the master schedules and reflected the requirements on specific disciplines within the Project such as Engineering, Procurement, Tooling and Manufacturing, and Test. Engineering release schedules and procurement schedules were published weekly using existing mechanized printout systems. Hardware oriented manufacturing schedules were manually produced and maintained by Production Control either at the project level or at central Production Control under the cognizance of their MDA Project representatives. Final assembly and test schedules produced at the Project Level were augmented by daily action item lists and status meetings to accomplish the detail planning, scheduling and follow-up.

Planning was accomplished at the Project Level primarily using three tools: planning meetings, master schedules of the traditional Gantt (bar and milestone) type, and master schedules depicting the logical sequence of activities and events in a network format comparable to that employed in a PERT system. Program, hardware and test requirements, as initially set out by Planning and Engineering, were scrutinized and reviewed in planning meetings by all disciplines on the Project. These meetings clarified technical and program requirements in detail for all elements of the Project organization and identified the many interrelationships between activities that established the logic and time phasings of the program element being planned. Several

iterations of the initial planning process usually were carried out to evolve a suitable, coordinated and reasonably complete baseline master plan and schedule. At this point, the logic network plan was reduced to Gantt type bar and milestone chart presentation for publication as the master schedule. The network was maintained by Planning as a tool, and was pertinent for continuing planning activity, performance evaluation, schedule recovery planning, and occasional reprogramming. The network plan and schedule was maintained in the MDA Control Room for those program elements such as the Flight Article which were subject to frequent attention by the Program Manager and his project leaders.

Program elements which were accorded invididual planning and control attention during the MDA program were the following:

- The Zero-G MDA segment and simulation hardware
- The Neutral Buoyancy Article and simulation hardware
- The Engineering Mockup and mockup hardware
- The Development Mockup and electrical harness fabrication
- Components for installation in the Structural Test, Flight, and Backup Article pressure vessels at MSFC
- ATM Film Vaults
- Dynamic Test Article and simulation hardware
- Flight Article and installed CFE
- Qualification Test Program
- Backup Article and installed CFE
- One-G Trainer and installed training hardware
- Ground Support Equipment
- Government Furnished Property

Master schedules were published and maintained during the active period at Denver of each one of these elements, except Government Furnished Property. Tabulations were maintained separately on Government Furnished hardware and data based initially on Exhibit "B" to the contract. These logs were updated in advance of changes to Exhibit "B" as requirements were more thoroughly defined through project planning and the configuration change control process.

Immediately after the limited go-ahead given the MDA Program at Martin Marietta on October 15, 1969 the project plunged into three essentially different hardware activities. The first involved simulation and mockup hardware with initial deliveries due in only 15 weeks. The second activity was directed toward the final definition of specifications and interface control documents for the MDA, and the design, procurement, tooling,

detail fabrication and preparation for factory operations on receipt of the flight article shell, then approximately 37 weeks distant. The third activity was design and fabrication of Ground Support Equipment.

Response to the requirements for simulation and mockup hardware was accomplished expeditiously through "task teams". These teams centralized the design and fabrication disciplines at the final assembly area and adjacent to the factory detail fabrication areas. Team leadership was vested in Engineering, as this effort was contributing primarily to flight hardware design. Engineering "release" and configuration control were the responsibility of the Lead Engineer. Established production control and quality assurance practices were supplanted by less formalized management and increased designer/technician communication. Design changes were made by "red line" to the shop drawings as necessary. The manufacturing team leader controlled "red lined" drawings in the shop. Meetings were held weekly, more often if necessary, to clarify task plans in detail, to resolve task management problems, and to measure and forecast accomplishments. These meetings were also one of several sources of "feedback" to the Program Manager with respect to the progress and quality of the project effort.

The "task team" approach was applied, in many respects, to all the major elements of the MDA effort at Denver. Established engineering release, configuration management, production control and quality assurance methods were followed with respect to flight hardware to comply with the design, process and inspection constraints on the build of flight hardware. But the personalized team effort was largely maintained. Team leadership shifted from Engineering during the design and early drawing release phases to Manufacturing Project as detail fabrication progressed and on-module factory operations became imminent. While technical direction was maintained throughout the program by the Project Engineer, the shift in team leadership reflected the change in emphasis from design release to building and delivering hardware on schedule. Planning networks maintained in the MDA Control Room were successful in depicting the more complex effort involved on the Flight and Backup Articles and served as reference during the daily meetings held by the task team leadership. These meetings also clarified the detail of task planning, resolved task management problems, coordinated the team effort and measured and forecast accomplishment.

Task team efforts at Denver continued beyond the DD250 of hardware at Denver for the Flight, Backup and One-G Trainer

Articles. Engineering change activity remained relatively high until just a few months prior to launch of the Flight Article. Modification kit incorporation was, therefore, a significant activity at St. Louis for the Flight and Backup Articles, at KSC for the Flight Article, and at JSC for the One-G Trainer. The respective task teams at Denver coordinated the planning and scheduling of this change activity with the several off-site locations. In addition, the team maintained daily technical and operational coordination in support of the off-site activities at St. Louis and KSC.

More than 170 end items of Ground Support Equipment were produced by the MDA Project. Fabrication of details and final assembly were accomplished by Manufacturing and Tooling primarily in the factory area for the structural and mechanical GSE. Most of the Electrical GSE was built in the Engineering Electrical Laboratory. Conventional production control practices were followed in managing the factory effort. Periodic planning meetings at the project level obtained hardware build status and forecasts from both Manufacturing and Engineering, and served to clarify program and schedule requirements for GSE. Many of the GSE items were needed to support Flight Article build or for fit-check with flight hardware. These requirements also subjected GSE status to review during action item meetings held by the task team for the Flight Article.

Design and fabrication of GSE for the Flight Article continued beyond the delivery of the module from Denver to St. Louis. For example, incorporation of the Video Tape Recorder into the MDA and a change in schedule for installation of Experiment M512 required new GSE. Design changes also were incorporated into GSE up to within a few months of launch of the Flight Article as a result of experience with the hardware at KSC or St. Louis. Design and fabrication of these new GSE items was covered by the GSE team and design changes were managed through the change authorization process.

9.2 CONFIGURATION CONTROL

The establishment of a responsive yet flexible Configuration Control System required the implementation of several management techniques, among which were the utilization of Configuration and Data Management personnel as well as Change Management personnel to pursue contractual paperwork. The Configuration Control System was contractually established with the implementation of the Configuration Management Plan, ED-2002-1004, as approved by MSFC Supplemental Agreement 145 dated July 1970.

NASA documents NHB 8040.1 and CM 027-001-2H (Contractor Configuration Management Requirements) were extensively referenced in the preparation of this plan in order to provide continuity between NASA Skylab Configuration Management objectives and the MMC configuration control disciplines.

9.2.1 Program Milestones

As certain major program milestones were approached it became necessary to definitize the exact status of ICDs, Spec Changes, and ECPs relating to each milestone.

All open ICD Category 1 (hardware related) items, Spec Changes, ECPs and open hardware items were identified for each of the following milestones:

• Flight Article DD250	12-20-71
• Spacecraft Acceptance Review Ø I	05-10-72
• Spacecraft Acceptance Review Ø II	09-18-72
• Backup Article DD250	10-25-72
• Flight Article Flight Readiness Review*	04-10-73
• SL-1 Launch*	05-14-73

*All open items were reduced to zero for this event.

The list of open items pertinent to ICDs were generated by C&DM, forwarded to the MSFC Program Office for signature, and subsequently enclosed with the Acceptance Data Package accompanying the hardware.

The list of open items pertinent to Specs, ECPs and Hardware Changes was verified as being open in the MSFC tab run and enclosed in the Acceptance Data Package accompanying the hardware.

9.2.2 Configuration and Data Management

The prime responsibility of the Configuration and Data Management Section was the initiation, organization, issuance and maintenance of contractual paperwork such as Interface Control Documents (ICDs), End Item Specifications (EISs) and Program Plan & Requirements documents. In addition, the Configuration Status and Accounting function was also performed. Each item of documentation was issued for a specific purpose (as defined herein) and each was contractually implemented by the NASA. Refer to the following paragraphs for an in-depth historical report of the various documentation areas and management functions.

9.2.2.1 Interface Management (MSFC)

An interface is the specifically defined and located juncture between two or more end items which are under the design jurisdiction of different Contractors or Government agencies. The responsibilities of MMC relating to the identification, documentation, implementation, status and change control phases of interface management for the MDA Program are summarized herein. ICDs have been utilized to record interface agreements and interrelate very closely with internal engineering drawings which, in turn, control hardware development.

A. Identification Phase - Formal identification activities for ICDs authorized by the procuring agency were initiated in late 1969. MSFC Change Order 65, dated December 1969 approved modification of the Contract Statement of Work (Exhibit A) to implement MSFC Document 10M01840C, ICD Identification Matrix. This matrix specified twenty-seven (27) ICDs as pertinent to MDA (MMC) as follows:

13M__	40M__	50M__	65ICD__
13M02521	40M35595	*50M13125	65ICDXXXX
*13M04632	*40M35596	50M13126	65ICDXXXX
*13M12161	40M35600	50M13136	
*13M12191	40M35601	50M13146	
*13M12193	*40M35625	50M13148	
*13M12201	*40M35646	50M16132	
*13M12203	40M35651		
13M20723	*40M35652		
13M20726			
13M20727			
*13M20979			

Twelve (12) of these twenty-seven (27) ICDs were initiated by MMC/MDA as indicated by the asterisks above.

Since initial implementation, document 10M01840 has undergone numerous revisions to incorporate additional ICDs. The latest revision to the document was AE dated April 1973. Eighty-one (81) ICDs are now specified as relevant to MDA (MMC), as follows:

13M__		40M__	50M__	65ICD & 66ICD__
13M02521	*13M13431	*40M35601-2	50M13120	65ICD9023
*13M04632	*13M13432	*40M35625	50M13122	65ICD9213
*13M07393	*13M13513	*40M35646	*50M13125	65ICD9220
*13M07397	*13M13525	*40M35652	50M13136	65ICD9542
*13M07399	*13M13534	*40M35656	50M13146	66ICD2138
*13M07400	*13M13543	*40M35661	50M13148	66ICD8036
*13M07401	13M20723	40M35662-2	50M16132	66ICD8042
*13M07402	13M20726	*40M35664	*50M16134	66ICD8044
*13M07403	13M20727	*40M35672	50M16139	
*13M07404	*13M20979	*40M35673	50M16142	OTHER
*13M07405	13M20988	*40M35674	*50M16145	101E439G
*13M07408	13M20989	*40M35675	50M16147	
*13M12161		40M35679	*50M16149	
*13M12191		40M35681	50M16154	
*13M12201		40M35690	*50M16155	
*13M13401			*50M16158	
13M13414			50M16159	
*13M13420				
*13M13421				
*13M13422				
*13M13423				
*13M13424				
*13M13425				
*13M13426				
*13M13427				
*13M13428				
*13M13429				
*13M13430				

Of the eighty-one (81) ICDs, fifty (50) have been initiated by MMC/MDA as indicated by the asterisks above.

B. Documentation Phase - Once the decision was made regarding ICD Custodians, the actual task of preparing and coordinating each individual ICD was begun. Working very closely with Engineering personnel, Configuration and Data Management (C&DM) people acted as the cohesive force behind assembling all of the individual engineering inputs either into a preliminary ICD format, if MMC/MDA was the Custodian, or into a response to the Custodian if we were an Associate Contractor.

Once the Preliminary ICD or response was typed and reproduced, the coordination cycle was begun by C&DM. Information was not only exchanged between all associate contractors, but also information copies were provided to NASA for their comments prior to

the Contractor Engineering Change Proposal (ECP) submittal. A majority of the ICDs pertained only to one specific area; i.e., mechanical, electrical or instrumentation and communication, and therefore required coordination with only one MSFC responsible engineer. Several ICDs, however, encompassed all three areas and therefore required additional coordination internally within MSFC.

In the particular case of Level A ICDs, two NASA Centers were involved and coordination efforts with both Centers usually culminated in Interface Control Working Group (ICWG) meetings to resolve any existing incompatibilities.

An example of this specific situation occurred midway in 1970 when NASA direction was received to install EREP (MSC) into the MDA (MSFC). As a result, the following Level A ICDs were impacted:

Experiment	13M	40M	50M
S190	13M12201	40M35646	--
S191	13M07399	40M35672	--
S192	13M07400	40M35675	--
ESE	13M07397	40M35673	50M16145

In some cases, it was necessary to modify the content of the ICDs by issuing more than one change/ICD in the same ECP package. An extremely complex coordination cycle thereby resulted. ECP ED0047R1 was submitted in June of 1970 and by late February of 1971 customer Change Order 342 had been received. So within a time span of approximately eight (8) months, a major revision to the MDA interface configuration was accomplished.

C. Implementation Phase - Implementing an ICD, after coordination as per Paragraph 9.2.2.1.B above, was merely a matter of submitting the document, via ECP, for NASA approval. Dual ECP submittals were required for all Level A ICDs. ECPs were officially submitted through the Change Management group whose functions/history are defined in Paragraph 9.2.3. Once a submittal was accomplished, NASAs internal processing obtained the cognizant NASA engineers' signature approval, the pertinent center signature approval (if Level A), and the issuance of a Configuration Control Board Directive (CCBD) dispositioning the document along with either a Contracting Officer's Letter of Approval or a Contract Modification to incorporate the document into the Contractual Index and Status Report. If the repository version of the document was issued by MSFC "without change" from that submitted via ECP, MMC closed out the implementation activity by issuing a "letter" Record Engineering Change Proposal (RECP)

of acceptance. If the repository version of the document was issued "with changes" from that submitted via the ECP, another review (and potential ECP submittal) cycle was initiated to determine the impact of the changes. (No impact again resulted in issuance of a "letter" RECP reflecting Contractor acceptance).

D. Change Control Phase - ICDs need to be readily revisable without reissuing the complete document each time a change is made. To accomplish this, a Preliminary Interface Revision Notice (PIRN) was issued. Each PIRN was submitted via an ECP and when approved by the Customer each PIRN became a contractually implemented Interface Revision Notice (IRN). By mid 1970, submittal of PIRNs had begun in earnest and at the time of SL-1 launch, (May 1973) the total number of repository IRNs tallied up as follows:

Facility ICD	Mechanical ICDs	Electrical ICDs	Instr.& Commun. ICDs
(65ICD__ & 66ICD_)	(13M_____)	(40M_____)	(50M_____)
363	318	72	153

The nine hundred six (906) repository IRNs specified above do not reflect the total PIRN activities since an approximate additional 10% were either disapproved, withdrawn, or cancelled. Additionally, ICD revisions (where the number of repository IRNs outstanding made it feasible to perform an incorporation) accounted for fifty-two (52) reissued documents, of which forty-four (44) were formally released through the Repository and eight (8) were either disapproved or no action taken. Eleven (11) other ICD revisions were completed but never formally submitted via ECP in accordance with an MSFC request to withhold further submittals, (Ref. MSFC Letter SL-AL/MDA (241-73), dated March 1973; Subj: Discontinuation of ICD revision submittal; signed by Floyd M. Drummond, Project Manager). Twenty-eight (28) Drawing Departure Authorizations (DDAs) were contractually implemented during the life of the program. A DDA was used to depict a "one-article non-conformance". DDAs were not incorporated into the document except that they sometimes were "attached" to new revisions for reference purposes. DDAs and Revisions both required the same amount of coordination and the same ECP submittal loop as PIRNs before they became contractually implemented.

E. Status Phase - Once each month a "Contractual Index and Status Report" was prepared and published by MSFC in conjunction with input received from C&DM. CM-023-007-2H is the document number and the last issue date was August 1973.

Each major module had a Contractual Index and Status Report and a constant effort was expended to keep the reports current and up to date. Each ICD (latest revision) and all outstanding IRNs (ones not incorporated into revisions) were listed along with such entries as Contractor ECP Number, Program Change Number (PCN), CCBD Number, Contracting Officer's acceptance action, and Contractor's acknowledgement thereof.

F. Conclusions and Recommendations - In the interest of providing improved interface management in the future, the following comments and/or suggestions are offered regarding the present mode of operation.

(1) Concurrent development of engineering drawings and ICDs should be avoided. The Skylab Program presented a situation where the concurrent aspect was unavoidable and MMC was forced to work around this situation. Manpower can best be utilized by using the same personnel to originate the engineering drawings as those used to construct the ICDs. This then means that the ICD effort should be scheduled prior to engineering drawing release.

(2) Precoordination of ICDs/PIRNs with the Customer (concurrent with the Associate Contractor coordination loop) provides adequate opportunity for the Customer to input his desires regarding document content. It is therefore desirable to eliminate the present dual input cycle and the resultant Contractor re-impact via Engineering Design Change Schedule (EDCS)/ECP if the document is revised after ECP submittal.

(3) ICD revisions should become "mandatory" after issuance of ten (10) IRNs. In some cases, revisions are desirable <u>prior</u> to that point in order to provide clarity. Once an ICD revision has been submitted via ECP, it is <u>extremely desirable</u> to have NASA process the submittal through Repository, i.e., positive acknowledgement of <u>completed effort</u> rather than a negative "DISAPPROVAL".

(4) Data Requirements List (DRL) submittals and ECP submittals of "Basic" ICDs are duplicate efforts. An ICD can be contractually implemented via the ECP loop only. Therefore, it is recommended that the ten (10) copies formerly required for DRL submittal be deleted, especially since these ten (10) copies became obsolete if the Cusomter approved the document "with changes".

(5) Engineering drawings should reference the applicable ICD(s), by number in a general note and specific dimensions or parameters controlled by ICDs should carry the connotation "controlled by ICD". This procedure will facilitate completion of the configuration audit prior to hardware delivery/buy off.

(6) Eliminate the need for reduction of all interface changes to zero prior to Flight Readiness Review (FRR). This constraint, although an admirable goal, should not be mandatory. Paperwork changes could be processed as late as the postlaunch period without jepordizing the program. Hardware changes, of course, must be completed earlier (prior to FRR, for example).

9.2.2.2 Specification Management

The requirements for performance, design, test, and qualification of the MDA are contained in Specification No. CP114A1000026, Rev. E, dated April 1970, entitled "Contract End Item Specification, EI 014000A, Multiple Docking Adapter for Skylab Program", including Spec Change Packages Nos. 1 thru 23.

This specification was added to the contract by Contract Change Order No. 65 dated December 1969, and subsequently incorporated by Supplemental Agreement No. 145, dated July 1970. Prior to incorporation, in response to Change Order No. 47, C&DM personnel, with inputs from and working closely with Engineering and other technical personnel, prepared and submitted to MSFC a draft copy of Revision D to this specification. The draft was reviewed and further refined by MSFC and subsequently placed on contract by Change Order No. 65 (as Rev D, dated Nov. 1969). Under the formal incorporation by Supplemental Agreement No. 145, the revision letter was changed from "D" to "E" and the date of the spec. changed from "Nov. 1969" to "April 1970".

Subsequent to incorporation, as directed by Change Order No. 65, MMC assumed responsibility for the control and maintenance of the spec., with C&DM performing overall coordination and final preparation of Specification Change Notices (SCNs). During the ensuing period twenty-three (23) Change Packages were prepared and issued. These change packages incorporated a total of one hundred sixty-one (161) approved SCNs while twenty-four (24 numbered SCNs were either disapproved or cancelled. Each SCN was submitted to MSFC as an integral part of an ECP by Change Management with final review and disposition by the MSFC Configuration Control Board (CCB).

9.2.2.3 Plans and Requirements Management

Various planning and requirements documents were prepared and maintained during the MDA contract period of performance. Those which were formally incorporated into the contract are identified below, along with other information showing status at the end of the program. Other planning documents which were prepared and maintained by organizations other than C&DM but which were not formally incorporated into the contract are identified in the Data Requirements List/Data Requirements Description (DRL/DRD, Annex I to Exhibit A).

Doc. No.	Rev.	Date	Title	Updating CNs:
ED-2002-1002	Basic	4-1-70	MDA Reliability Plan	1
ED-2002-1003	Basic	4-1-70	MDA Quality Control Plan	1, 2
ED-2002-1004	Basic	4-1-70	MDA Configuration Management Plan	1 thru 6
ED-2002-1005, Volume I	Basic	4-1-70	MDA General Test Plan, General Test Requirements	1 thru 8
ED-2002-1005, Volume II	Basic	4-1-70	MDA General Test Plan, Qualification Requirements	1 thru 14
ED-2002-1008	Basic	4-1-70	MDA Systems Safety Plan	None
ED-2002-1032	Basic	8-20-70	MDA EMC Control Plan	1 thru 4
ED-2002-2020	A	10-7-71	MDA Systems Test and Checkout Requirements (Flight Article)	1 thru 19
ED-2002-2028	Basic	8-31-71	MDA Critical Items List	1 thru 5
ED-2002-2032	Basic	2-11-73	MDA Systems Test and Checkout Requirements (Backup Article)	1 thru 9
ED-2002-2040	B	12-7-72	MDA Post Deliver Operations Plan	1, 2

9.2.2.4 Configuration Status and Accounting

Configuration Status and Accounting (CS&A) of the MDA Program was initiated concurrent with the receipt of MSFC Change Order 65 in December 1969. Change Order 65 established the requirement for an MDA Configuration Management Plan (ED2002-1004) with the guidelines for the requirements of the CS&A function. Contract End Item Specifications, design and build drawings and changes thereto were utilized as the configuration description upon which the status and accounting function was based. As each specification, drawing and change was processed through the formal approval/release system it was entered into the CS&A system as a permanent record. CS&A for the MDA Program used the existing MMC mechanized status and accounting system. All basic release of design engineering was entered into the system as it occurred. Concurrently a Design and Build List was initiated and maintained showing all contract end item design and build requirements, their usage, and the end item serial numbers assigned.

A. Departures from Standard Practice - In conjunction with the development of the Configuration Management Plan, departures from MMC standard CS&A practices were implemented for selected hardware end items.

(1) Ground Support Equipment (GSE), Trainers, and Mockups were designed to form 4 (sketch type) engineering drawings with no formal release or status and accounting. Upon completion of the initial build (and prior to acceptance) of the first article of an end item series a Quality Control verification of the as-built hardware to the drawings was accomplished. Red line drawing changes were incorporated as necessary to reflect the as-built configuration and the drawings were formally released as basic. It was at this point in the program that CS&A was implemented for this catagory of hardware.

(2) A Liaison Call change system was established at the St. Louis/MDAC-E facility to allow the documentation of required changes to GFP hardware during the integration testing at St. Louis. The Liaison Calls, when approved by the local NASA Resident Management Office (RMO), authorized the design changes to be accomplished expeditiously, commensurate with the tight test schedules. The formal submittal/approval cycle with formally released

engineering changes followed and was closed by Quality verification of the work effort previously completed by the Liaison Call.

B. Status and Accounting System - Each EDCS originated to process a change was reviewed by CS&A for serialization impact, completeness of effectivity, contract documentation impact, and special quality control verification requirements. Upon approval the resultant engineering design changes were reviewed (prior to release) for compliance to the contract change authorization. The Quality Control (Q.C.) incorporation verification requirements of the design change were determined, and the mechanized CS&A record was established. The mechanized system was cycled twice each week providing an updated status of those changes requiring verification of incorporation by Q.C.. Verification of each incorporation was documented on a Manufacturing Incorporation Verification Buy-Off Transmittal form and forwarded to CS&A for processing into the mechanized system. This closed-loop system provided a total record of all engineering design changes and the evidence of manufacturing incorporation of those changes was established.

Coincident with the statusing of each engineering design change, each contract change was also statused in terms of the total impact to configuration controlled documentation, and the hardware end items affected. These records were certified versus the contract authority for the change by the AFPRO on a continual basis up to the time of acceptance of the hardware. Once certified, the record could not be changed without AFPRO re-certification. This status provided a ready reference of all contract changes, the impact to configuration controlled documentation and hardware, and formed the basis for acceptance of that hardware.

Historical status reports were retrieved from the CS&A files to support the various design reviews, vehicle movements, customer acceptances, and selected program milestones.

C. Configuration Status and Accounting Support to Design Reviews, Acceptances, and Program Milestones - Prior to movement of the Flight Article MDA to the Vertical Test Facility (VTF), all unincorporated changes in the CS&A system were reviewed to determine those changes which had to be worked prior to proof pressure testing. Subsequent to VTF testing the Flight Article was moved back to the Factory and then to the Space Support Building (SSB) for final assembly and additional tests. At this time, the CS&A system was reviewed again, this time in conjunction with NASA personnel. This review certified the readiness of the

vehicle for movement to the SSB. At completion of the activities at SSB, a final verification of the MMC CS&A records versus the MSFC Status and Accounting System was performed to establish the compatibility of the two systems and certify the readiness for acceptance and shipment to St. Louis/MDAC-E. The MMC CS&A system was maintained throughout the life of the program in accordance with the contract requirement and was utilized repeatedly to verify and certify the MSFC status at subsequent reviews and milestones where configuration status of MDA hardware was a requirement.

D. Acceptance DD250s - CS&A provided Acceptance DD250s for all deliverable hardware on the MDA Program. Subsequent to acceptance, each retrofit modification was documented on a DD250 at shipment and at installation. One hundred seventy-six (176) Ground Support Equipment (GSE) end items and forty-two (42) Flight hardware end items (including the Flight and Backup MDA) were documented on acceptance DD250s. In addition, one hundred twenty (120) Modification Kits on the One-G Trainer were sold on installation DD250s; one hundred forty-one (141) Modification Kits on the Flight Article MDA were sold on shipment and installation DD250s. Eighty-four (84) Kits were sold at KSC, one hundred eighty-eight (188) Kits at St. Louis, one hundred twenty (120) Kits at JSC, and nineteen (19) Kits at MMC or other Contractors, for a total of four hundred eleven (411) Modification Kits.

E. St. Louis/MDAC-E Activity - During the integration testing of the MDA at the St. Louis facility, CS&A maintained status of all modifications to be accomplished. Mod work authorization packages were issued in accordance with the more detailed status provided by CS&A at St. Louis. Close coordination was maintained with the Test and Quality activity to ensure an accurate status of all mods in relation to the test milestones. CS&A maintained coordination with the local NASA Resident Management Officer (RMO) and obtained interim authorization to accomplish changes via the established Liaison Call method (Ref. Para 9.2.2.4.A.2). CS&A maintained control of the Liaison Call book at St. Louis and ensured ECP/Mod Kit follow-up and closeout of all work accomplished to Liaison Calls. Technical authorization was obtained from the RMO for shipment of GFP hardware in accordance with program needs. Prior to shipment of the MDA to KSC, verification of the MMC status and accounting system to the MSFC status and accounting system was accomplished, to recertify the MSFC status and accounting system and provide a basis for the Certificate of Flight Worthiness (COFW) Endorsement 2 and shipment of the equipment to KSC.

F. KSC Activity - During the KSC activity period, configuration changes to the Flight Article were implemented by type A Test Preparation Sheets (TPSs). Engineering drawing changes were developed and released in conjunction with these TPSs. CS&A received all type A TPSs at Denver and tracked the change and design releases within the CS&A system to ensure total accountability of changes. Closeout of changes on TPSs was also monitored at Denver and transferred to the CS&A and MSFC mechanized status as they occurred. A continuous verification of the MMC status to the MSFC status was performed to ensure total visability of all change activity. The MMC mechanized status was provided to the MMC/KSC personnel twice each week for status of open modifications.

G. One-G Trainer Activity - The One-G Trainer was refurbished from the Engineering Mockup with form 4 sketch type engineering and sold on acceptance DD250 at Denver. The CS&A system was utilized at Denver in the same manner as for the GSE (Reference Para 9.2.2.4.A.1.). CS&A of retrofit configuration changes to the One-G Trainer was maintained within the MMC system and a status of all open retrofit work was provided as required. The nature of the training hardware at JSC dictated that mod incorporations be accomplished during preselected mod periods. Verification of modification incorporations was documented at JSC initially by completion of an Installation Notice Card (MSFC Form 2490). The MMC CS&A records were closed at Denver, based upon copies of the completed Installation Notice Card received. Concurrently, installation DD250s were provided by CS&A and sold at JSC.

H. Conclusions and Recommendations - The importance of both MMC and MSFC CS&A systems during the various phases of the program was developed incrementally. As their roles developed, it became increasingly important that both systems track each other. The reviews and verifications that were performed were very beneficial to both systems but were usually done in bulk just prior to an event. The bulk of the data and the importance of compatibility of both systems dictates that reviews and verifications of this nature should be conducted earlier in the program and incrementally rather than all at once.

Earlier MSFC identification of Acceptance Data Package (ADP) documentation would have been more Program effective. This type of documentation requires that data must be collected incrementally as the hardware progresses through the design/build/test cycle. If this data initiation and collection is not started concurrent with hardware build, the task becomes difficult, is not cost effective and contributes to documentation that compromises its effectiveness.

9.2.3 Change Management

The Change Management Section was responsible for the contractual submittal and approval of Engineering Change Proposals and also facilitated implementation of approved changes into the contract by Supplemental Agreement. These submittals covered engineering changes that were generated by NASA direction or by a technical requirement of the hardware. Each of these changes required the preparation and submittal of a contract proposal letter, the Engineering Change Proposal and the associated contractual documentation (Change Notices, PIRNs or ICDs). The preparation of the contract change proposal required the Change Management Section to initiate internal schedules, attend planning meetings, coordinate internal department inputs, work with all internal departments to assure that the change was being implemented in accordance with the requirements of the contract and maintain a working knowledge of the interrelationship of the changes' impact on other portions of the program (Earth Resources, etc). Upon receipt of completed internal inputs, the Change Manager prepared the contractual letter, ECP and assembled all supporting contractual documents into a submittal package that was in accordance with NASA requirements for contractual paper. The Change Manager was responsive to the NASA by providing status, contractor hardware information, liaison or assistance as required to expedite timely approval of the change and to prevent delays in hardware modification. Upon approval of the change by NASA, the Change Manager notified all internal departments of the approval and authorized its final implementation into the system. A total of one thousand ninety-one (1091) ECPs were dispositioned during the program.

10. MISSION OPERATIONS SUPPORT

10.1 GENERAL MMC SUPPORT PHILOSOPHY

Martin Marietta had diverse technical responsibilities to several NASA centers for Skylab operations support. A "Total Company" mission support team concept was developed to meet these responsibilities in a technically consistent and timely manner. Portions of this team were located at the various NASA centers with a centralized facility at Denver to monitor the mission and coordinate MMC Skylab operations support efforts. The MMC Skylab MSFC (MDA and SE&I), JSC and Headquarters managers and the Skylab Engineering Manager maintained their direct internal reporting responsibility as well as their customer reporting responsibilities for mission support (see Figure 10.1-1).

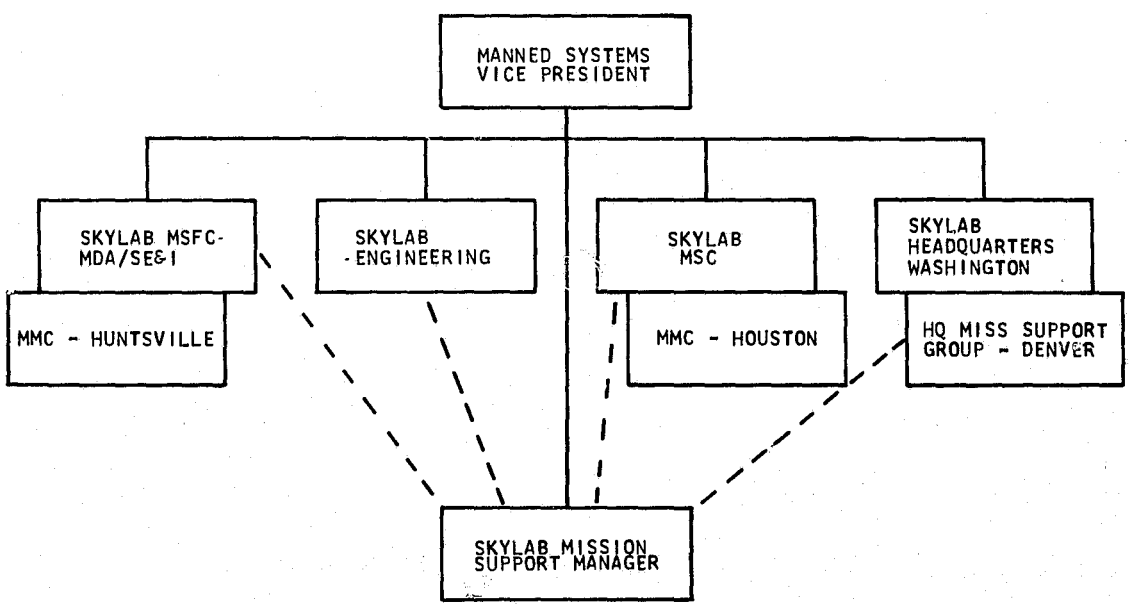

- COORDINATE TOTAL MMC MISSION SUPPORT COMMITMENT
- DENVER SUPPORT ROOM

COMMUNICATION
MISSION STATUS
DATA DISTRIBUTION
PROBLEM TRACKING/COORDINATION
SUPPORT SERVICES (REPRO, LIBRARY, ETC.)

- - - - - INDICATES INTERNAL MMC COORDINATION INTERFACES

Figure 10.1-1 Internal MMC Skylab Mission Support Interfaces

The position of MMC Skylab Mission Support Manager was established to coordinate the overall MMC mission support efforts. A Denver Support Room (DSR) was established to serve as a communications, data, mission information and activity coordination center for all program elements having mission support responsibilities. MDA mission support personnel were fully integrated into this effort.

10.2 NASA/MSFC SUPPORT

MSFC, as the Skylab integration center, was required to provide technical support and assistance to the Johnson Space Center throughout the Skylab missions for the modules and experiments which were their development responsibility.

MSFC support to Orbital Assembly (OA) flight operations was provided through the JSC Flight Operations Management Room (FOMR). The FOMR provided a single point interface between the JSC Mission Control Center (MCC) flight operations and the MSFC and JSC Program Offices with their respective engineering support organizations. (See Figure 10.2-1)

10.2.1 MSFC Support Organization

The MSFC Support Organization (see Figure 10.2-2) was a mission-specific functional overlay on the existing MSFC program and engineering line organizations. This overlay utilized to the maximum extent the normal technical responsibility, communication and problem solving channels that existed during hardware and mission development. It provided a direct interface to the launch and flight operations organizations, a central coordination staff, rapid data exchange, and the flexible communications system necessary for timely and effective mission support.

10.2.1.1 Mission Support Groups (MSGs)

MSGs were established for each primary OA system area, in order to provide the most direct and timely response to mission problems. A responsible Leader and Assistant Leader(s) were identified for each system group, as well as the necessary representatives from other line organizations to provide complete coverage of the system area. The MSG was organized around normal S&E Laboratory technical responsibilities and a senior person from the applicable laboratory was selected to lead the group.

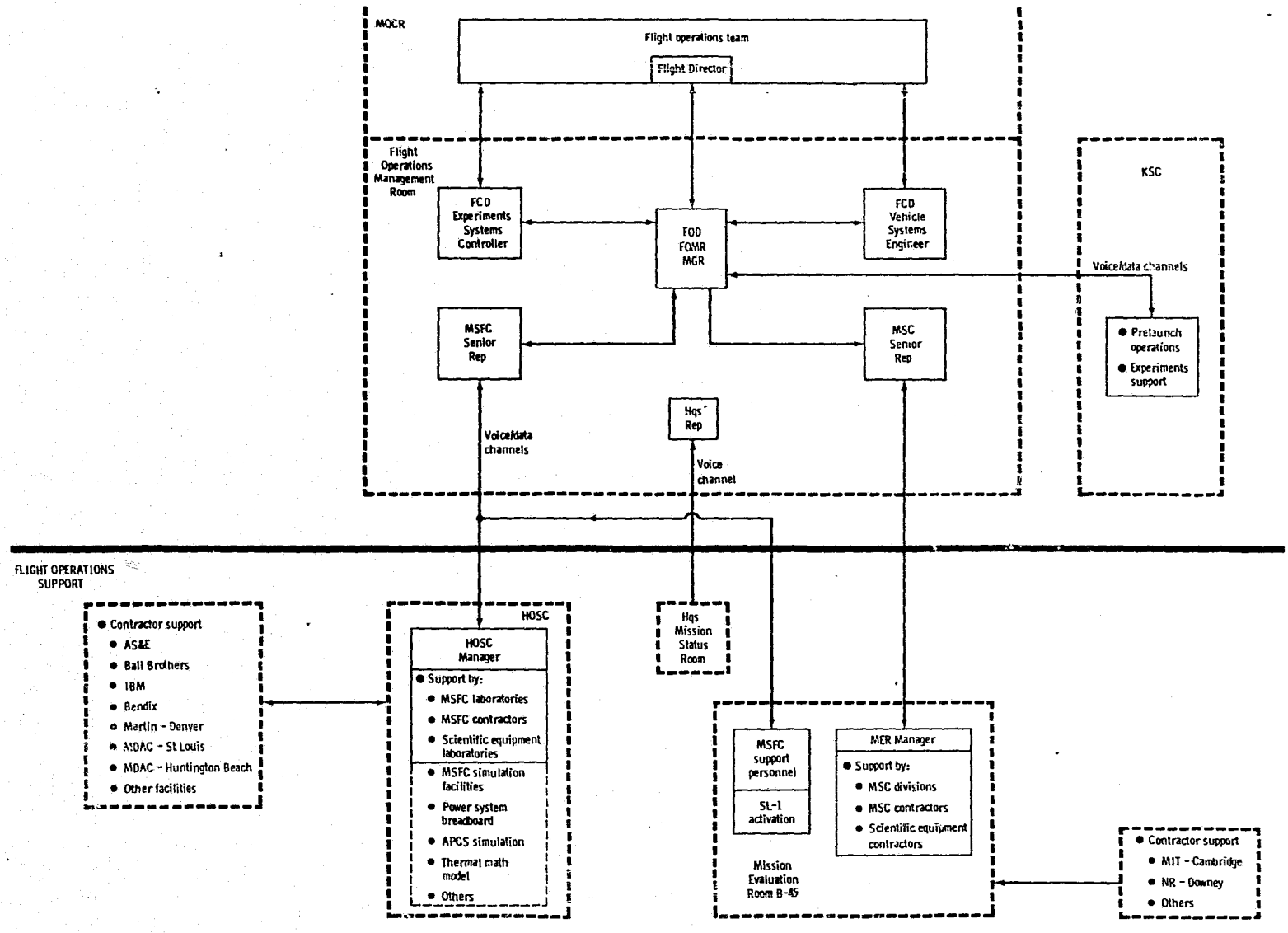

Figure 10.2-1 Skylab Flight Operations Management Support Plan Interfaces

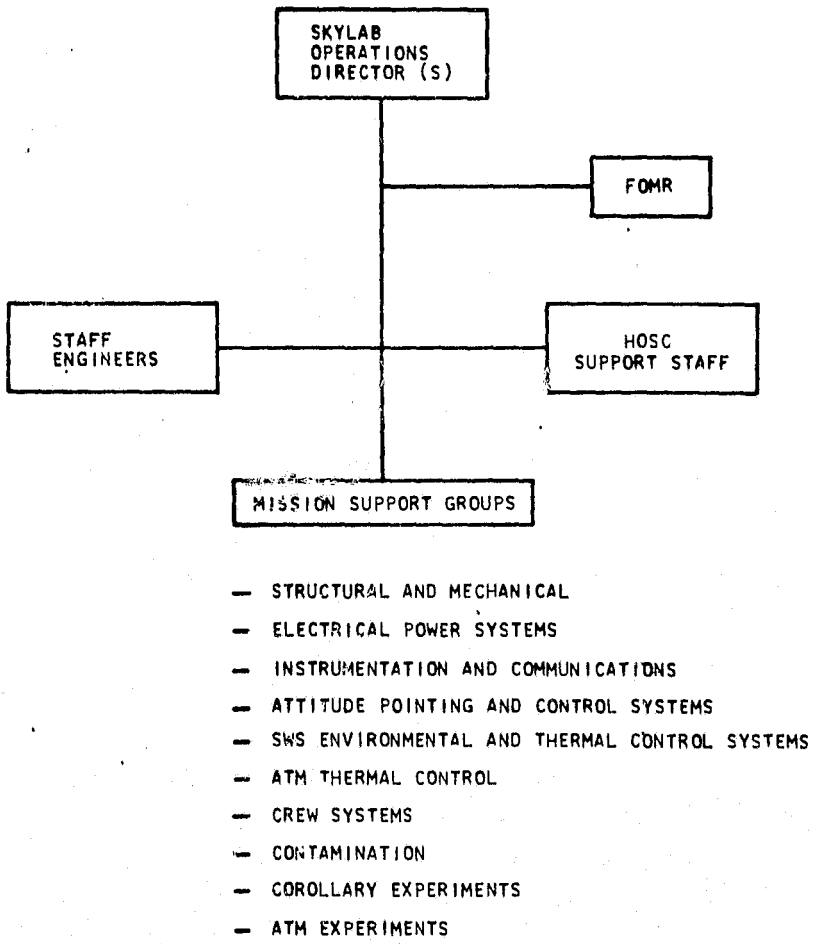

Figure 10.2-2 MSFC Skylab Operations Organization

The MSG Leaders were recognized authorities in the applicable system area, and were able to identify from the group membership those specialists necessary to work a given problem. They were responsible for coordinating problem disposition and documenting technical responses. MDA technical personnel were members of these Mission Support Groups.

10.2.1.2 Huntsville Operations Support Center (HOSC)

The center of Skylab Mission Support Activity at MSFC was the Huntsville Operations Support Center (HOSC) with its support organizations and facilities. Arrangement of the facility was such that concurrent support to launch and OA operations was possible. Conference Work Areas (CWAs) were established within the HOSC and assigned to MSGs and other supporting organizations required to directly interface with the MSFC Skylab Mission Support Organization.

10.2.2 Action Requests

Support Requests originated by the Flight Control Organization at JSC were forwarded through the FOMR to the HOSC. Responses to such requests and other inputs to the mission flowed back from HOSC to the FOMR and to the Flight Control Organization.

MSFC, by monitoring real time mission data and voice communication networks, was able to identify hardware anomalies, procedure problems, etc. and generate Action Requests (ARs) to the MSGs, Module Contractors or the JSC through the FOMR.

10.3 MDA CONTRACTOR OPERATION

MMC was under contract to support the MSFC Skylab Project Offices; the various laboratories of the Science and Engineering (S&E) Directorate; and the Mission Operations Office. The main areas of on-site support was to the AM/MDA Project Office and to the various MSGs. Technical personnel on-site at MSFC were assigned to the applicable MSGs to assist in system performance assessment, anomaly identification and resolution. On-site personnel assigned to a MSG were technically responsible to their MSG Leader (MSGL) while maintaining the technical and administrative interface with the design sections in Denver and the Contractor Representative at HOSC. The Contractor Representative was the major on-site interface with the MDA program office.

On-site personnel were the prime mode for providing anomaly support for MDA related problems. Personnel located at Denver actively coordinated with their on-site representative and provided backup analyses even when support was not requested by the MSGL. Figure 10.3-1 illustrates the MMC mission support organization.

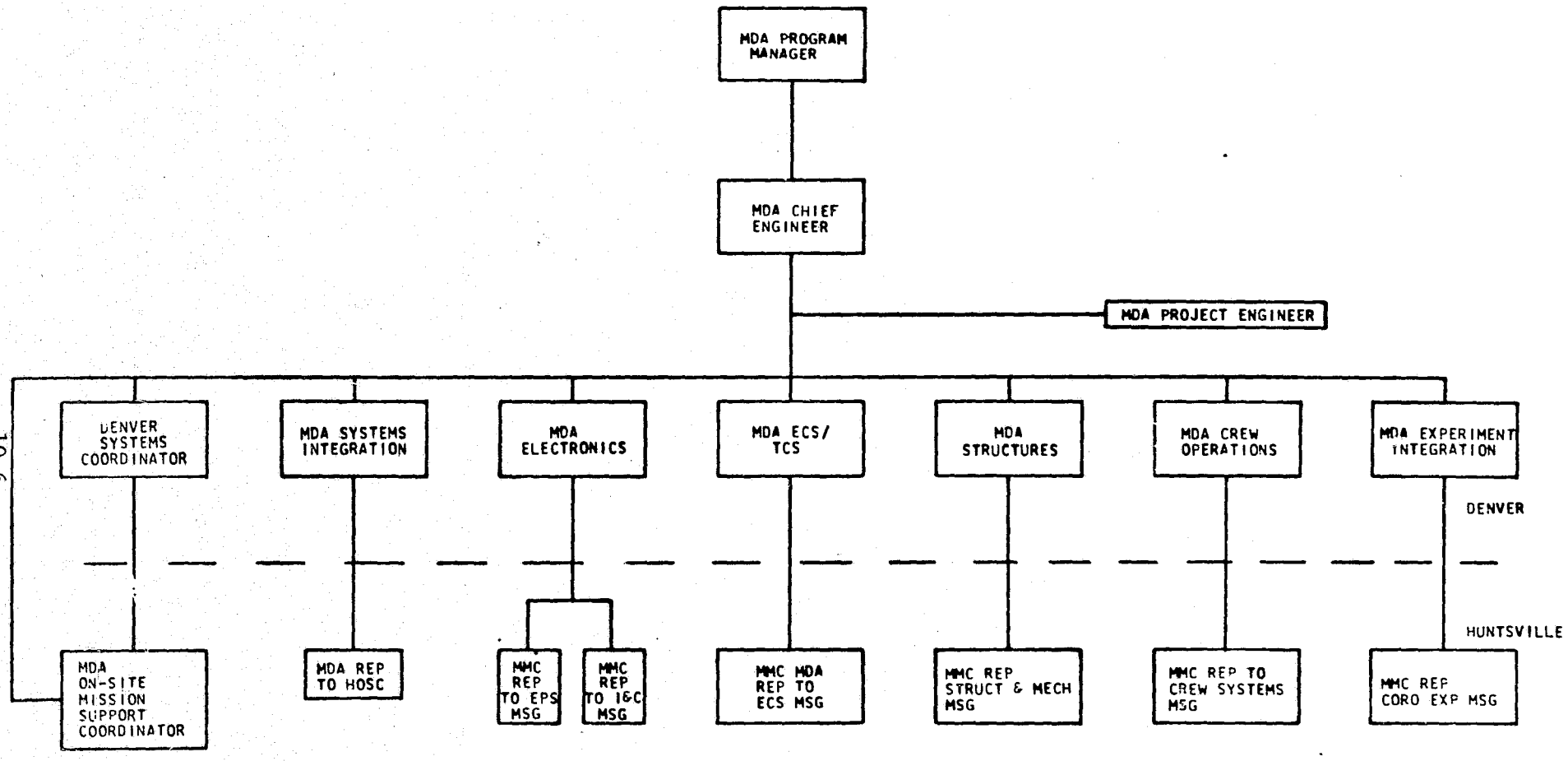

Figure 10.3-1 MDA Mission Support Organization

10.3.1 MMC On-Site MSFC Operations

Commensurate with the company's overall Skylab support role, MMC-Huntsville (MMC-H) operation supported the MSFC Skylab Program Office and MSFC Skylab Project Offices; the various laboratories under the S&E Directorate; and the Mission Operations Office. Although the supporting activities took place in different physical locations in the MSFC complex and at several MMC locations, the support activities were centered around operations at the HOSC.

Contractor representation at the HOSC covered three functional responsibilities:

- Contractor Senior Representation
- MDA Project Representation
- MDA Technical Support

10.3.1.1 Contractor Senior Representation

The Contractor Senior Representative at HOSC performed the following major functions:

- MMC representative to the MSFC Operations Support Manager (OSM) or Operations Director (OD) providing MMC support upon request.
- Communications with the DSR concerning status of MMC assigned actions, mission status, etc.
- Liaison capability for MMC personnel from all locations for mission operations related information.
- Provided mission status information daily to the MMC Huntsville Operations Manager and participated in the MMC Management daily telecon.

10.3.1.2 MDA Project Representation

The MDA Project Representative performed the following functions:

- Attend HOSC daily review meetings and represent the MDA Project Office Representative during these meetings when directed.
- Provide technical support to the OSM and the Project Office Manager.
- Provide a liaison function between the MSFC Systems Coordinator at the DSR and MMC members of the MSGs.

- Provide the Denver engineering personnel with a daily appraisal of on-going mission activities and Skylab progress reports.

The Project Representative also functioned as backup for the Contractor Senior Representative in the performance of his previously noted duties.

10.3.1.3 MDA Technical Support

The on-site personnel had multiple mission support roles to perform. They provided technical support to the MSGs responsible for a particular OA system, and were responsive to Program Office requirements. Their priority function was to provide on-going mission operations support including access to Skylab engineering drawings, specifications, test data, and other similar documentation. The contractor HOSC facility maintained top level engineering and stowage installation drawings in support of this function. They also maintained a complete set of MDA Engineering Drawings on microfilm aperture cards for authorized access during the mission. In most cases, this support was provided to the MSGs who in turn supported the functions MSFC provided to the MCC through the FOMR. On-site personnel were an integral part of the following Mission Support Groups:

- Electrical Power Systems
- Instrumentation and Communications
- Structural and Mechanical
- Crew Systems
- Corollary Experiments
- Environmental and Thermal Control Systems

The on-site personnel, when not actively involved in anomaly resolution support, were responsible for the determination of system performance and to keep Denver personnel aware of changes in system status during the mission. This daily assessment was made using real time telemetry data, Mission Operation Planning System (MOPS) data, and mission progress and status information generated at MSFC or obtained from JSC through the HOSC. This information was provided to Denver by phone or Magnafax facsimile transmission during both the manned and unmanned periods.

Systems Engineers were also located on-site and, although they were not assigned to any MSG, they did perform a supporting role and functioned as contractor representatives at the HOSC.

10.3.2 Denver Operations

10.3.2.1 Denver Support Room Facility

The DSR facility was established to serve as a focal point for MMC mission support activities. The facility was used for premission simulations and was continuously utilized in support of the Skylab mission on a 24-hour per day basis.

The MDA program has shared this facility with other MMC Skylab elements supporting MSFC, JSC and Headquarters. The common facility provided an opportunity to coordinate and integrate technical responses provided to different centers. The DSR was used primarily as a communications center providing on-site personnel access to backup information and personnel at Denver. Communication links were provided between Denver and all MMC support operations and the NASA support facilities at MSFC HOSC and JSC Mission Evaluation Room (MER). The room also served as a focal point for dissemination of mission status and support information for all Denver technical groups and management.

A DSR library was provided to facilitate immediate access to Skylab documentation, current mission data and personnel location and availability data.

Access to MDA drawings was provided through the implementation of procedures for 24 hour day availability of the Denver Central Engineering File 10. Quality Control data, including the build log and as-run test procedures, were indexed and made available in the DSR library. Similarly indices of contract data were made available in the library and 24 hour access implemented by the Skylab Data Manager.

A. DSR Operations - The DSR organization is shown in Figure 10.3-2. The Shift Supervisor responsible for administering the DSR facilities and equipment, was the single spokesman for the DSR for mission information and status. He daily chaired a meeting which provided the interchange of mission status and support information between Denver management and management on-site at St. Louis, MSFC, JSC, and Washington.

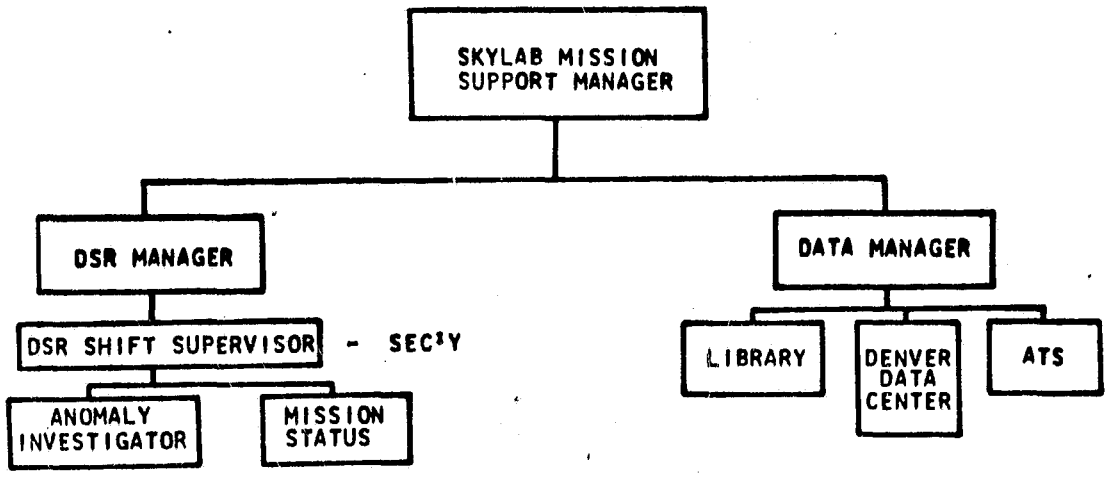

Figure 10.3-2 Denver Support Room Organization

A Mission Status position was provided to keep the Shift Supervisor informed on mission status and developments. This position kept a detailed chronological log of key mission events and Flight Director discussions from the communication networks. An accurate mission information index was therefore available for all technical groups. Information could be retrieved from 24 hour continuous tape recordings of this information.

An Anomaly Investigator was also provided to support the Shift Supervisor by statusing the support activities, i.e., ARs, Mission Action Requests (MARs), etc, that were being worked for the on-site personnel either at MSFC or JSC and any other problems being worked internally for MMC management.

B. DSR Participation - MDA program personnel were significantly involved in the DSR planning and operations beginning with facility requirements definition and data requirements and progressing into full participation in the use of the DSR during premission simulations and mission operations. Each MDA technical discipline used the DSR during high mission activity to monitor progress and keep in close contact with

MDA on-site personnel. During normal mission periods, the MDA technical personnel were either present in the DSR or on-call. Complete coverage for the MDA technical disciplines was provided by a MSFC Systems Coordinator during the manned phases of the mission. During the unmanned phases, single shift coverage by the Systems Coordinator was utilized to provide MDA representation in the DSR.

The Systems Coordinator provided the DSR with technical support and interfaces with the MDA design groups at Denver. He assessed/coordinated all NASA generated mission action requests for MDA impact/cation in Denver. He also assured that each problem was worked in a time frame consistent with real time mission support requirements. MDA technical representatives and/or the Systems Coordinator also monitored the Flight Director and air-to-ground communications network to maintain current mission status. This effort permitted early identification of real and potential MDA problems and rapid mobilization of Denver mission support personnel. Mission problems which affected more than one MDA system were coordinated with the other support groups by the MSFC Support Coordinator to assure that a total response was provided from Denver to the Mission Support Groups at MSFC.

10.3.2.2. Mission Problem Evaluation

During the mission, the DSR provided the capability to respond to a variety of mission related problems. Requests for action or problem support from either NASA or MMC on-site personnel were documented on a Problem Tracking Request (PTR) by the MSFC Systems Coordinator and provided to the affected disciplines.

Basically, problems worked by the MDA were generated in two distinct ways:

- The MSFC Systems Coordinator at Denver generated PTRs based on real time information obtained by monitoring the air-to-ground or Flight Director nets or from information provided by the MDA on-site personnel. Additionally, PTRs were generated at the request of MMC management.

- NASA at JSC or MSFC generated actions which were assigned to MMC disciplines either by the MSG, the OD or the MDA program office at HOSC. Coordination, integration and assignment of these problems with other affected disciplines was provided by the Systems Coordinator (at Denver).

Using the PTR system through the DSR, Denver personnel provided support to NASA and the on-site personnel as required throughout all mission phases. The following indicates the total number of action requests reviewed for MDA impact or action and the number of items assigned to MDA disciplines for action or review:

- 1662 Items reviewed by Systems Coordinator for MDA impact
- 506 Assigned to MDA for action or review
  - -226 Originated at MSFC
  - -163 Originated at JSC
  - -117 Originated at MMC

The DSR maintained displays of problem status for management tracking during the mission and a library of all problem and action requests for historical purposes.

10.3.2.3 Implementation of Mission Support

MDA personnel located in Denver provided support on a priority basis to the on-site personnel. The on-site personnel, in turn, provided liaison between the MSG Leaders and the Denver Engineering Sections so that each section chief was kept aware of on-site support activities and the status of anomaly resolution.

The prime activities of the Denver personnel were to provide long term evaluation of systems performance and detail backup for the on-site personnel.

Most action requests worked at Huntsville were also worked at Denver to keep management and the technical design groups up-to-date on system status or operational changes requiring in-depth analysis.

MMC support personnel at HOSC were responsible to the DSR shift supervisor to assure that all MARs, ARs or the content thereof was provided to Denver for use by the engineering support personnel. Normally, this was accomplished via telephone. When Denver action may have been required, copies of the action request (AR, MAR, etc) were provided to the DSR in the most expeditious manner. MARs with action assigned to MMC or "All MSGs" were always transmitted to the DSR. Others were Magnafaxed to the DSR on an as-required basis.

Denver responses to requests for action were processed at Huntsville as follows:

- The on-site representative to a MSG, was notified of its availability.
- A copy was delivered, when requested, to the S&E Senior Representatives on duty and a copy of all MDA related responses was provided to the NASA MDA Project Office Representative.

The DSR was notified of and supplied MSFC responses to ARs or MARs. The latest status of all Action Requests being statused at HOSC was communicated to the DSR.

10.3.3 MMC/JSC Interfaces

Interfaces with JSC were formally implemented through the MSFC S&E Laboratories, the MDA Program Office and Mission Operations Office. Primary interfaces with JSC included the technical review of operations documents such as:

- Flight data file (checklists, flight plans, malfunction procedures)
- Flight Mission Rules
- Systems and Experiments Handbooks
- Operations Data Book

An informal method of submitting review comments existed through the MMC personnel on-site at JSC. MDA related comments to any of these books were coordinated with the appropriate NASA technical counterparts at MSFC and informally transmitted as preliminary information to MMC personnel at JSC. These MMC personnel supported JSC in the preparation of various operations documents and crew training activities. Figure 10.3-3 illustrates the MDA approach to this review cycle which was continuous throughout the mission period. Other MDA mission support was provided utilizing the formal NASA program and communications routes established by the MDA Project Office and MSFC Mission Operations as detailed in Figure 10.2-1.

10.4 BACKUP ARTICLE AND STU-STDN

10.4.1 Backup Article

The MDA Backup Article was located at the MDAC-E facilities in St. Louis. Its general configuration was maintained as close

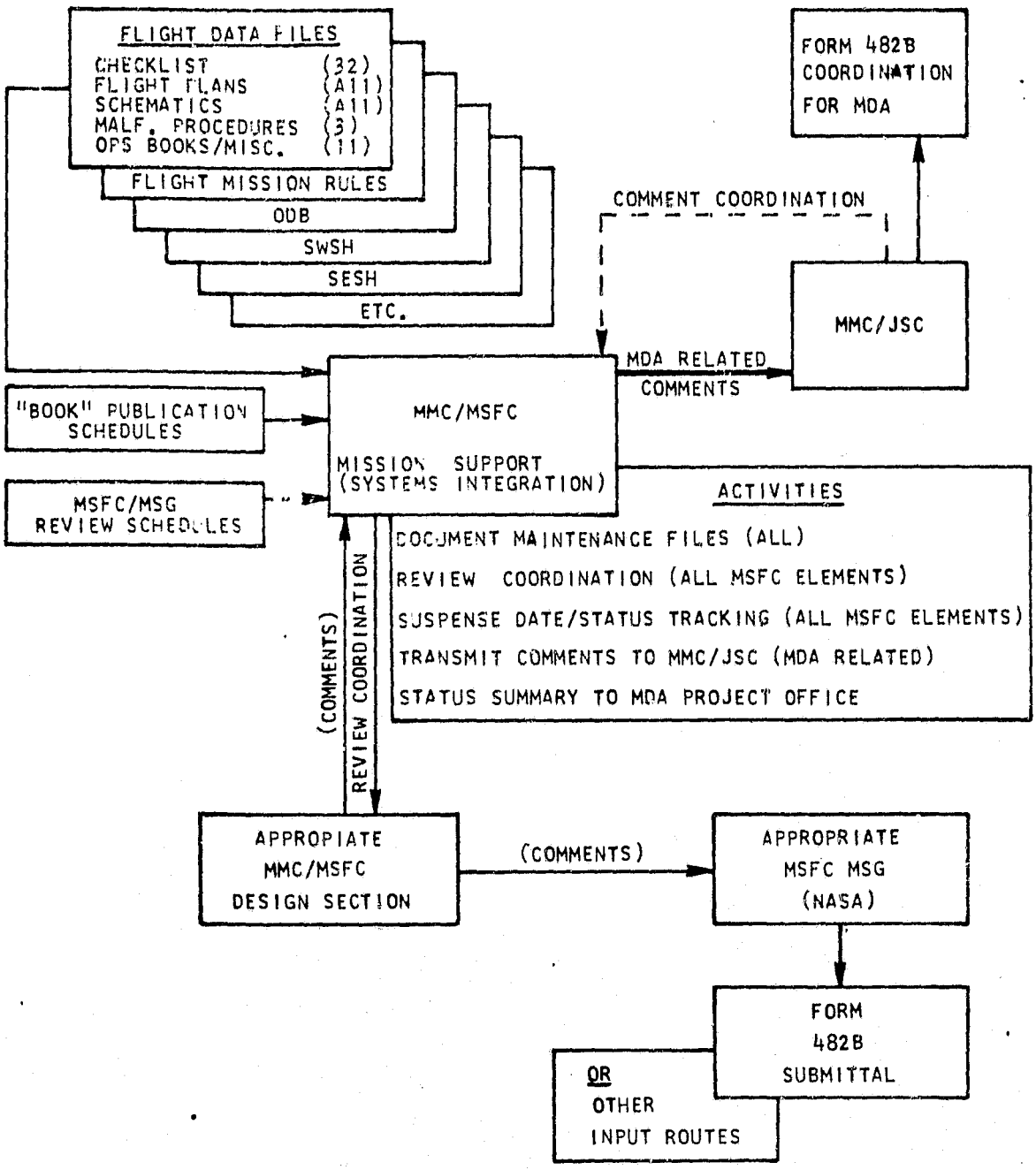

Figure 10.3-3 MMC/MDA Document Review Approach

as possible to the flight article with the following exceptions:

- No EREP sensors or Electronic Support Equipment
- Minimal Stowage
- ATM C&D had the qualification test panels

The backup article was maintained in this configuration to work hardware problems in support of the on-going mission. These activities included fit checks, crew procedure verification, system interaction verification, inflight maintenance task checkout, malfunction re-enactment and troubleshooting procedure verification. (See Section 7.8.2 for detailed mission support activities performed on the Backup article.) MDA personnel located in St. Louis provided 24 hour per day support during launch, activation and deactivation. During normal mission periods the MDA personnel were on duty 16 hours per day and the vehicle was powered up for 2 hours every third shift. During the remaining 8 hours per day short notice on-call schedules were maintained.

Backup article personnel provided support to all NASA disciplines under direction or approval of the AM/MDA Program Office at MSFC. Support was also provided to Denver through the interim MMC channels. See Figure 10.4-1 for the MDA Backup Article Mission Support Flow.

10.4.2 STU/STDN

The SWS STU/STDN, located at MDAC-E, was designed to simulate OA and ATM airborne and ground communication systems. The STU/STDN was a combination of component simulators, development hardware, qualification hardware and actual ground station equipment.

MMC had prime responsibility for TV system operations at this facility. Commensurate with this responsibility, MMC provided the STU with qualification test hardware, engineering tools and personnel for set-up and checkout prior to the mission. During the mission period, MMC provided key personnel on-site at St. Louis to coordinate test requirements, procedures and test support.

STU TV activity in support of the mission can be divided into two categories:

- Direct mission support, and
- "Nonmission" support.

Direct mission support was specifically tied to the I&C MSGL at MSFC. Engineering Work Orders and "as-run procedures" were supplied to MMC-MDA-TV personnel and to the DSR for information. The mission support activities performed at STU/STDN are detailed in Section 7.9.4.

C-4

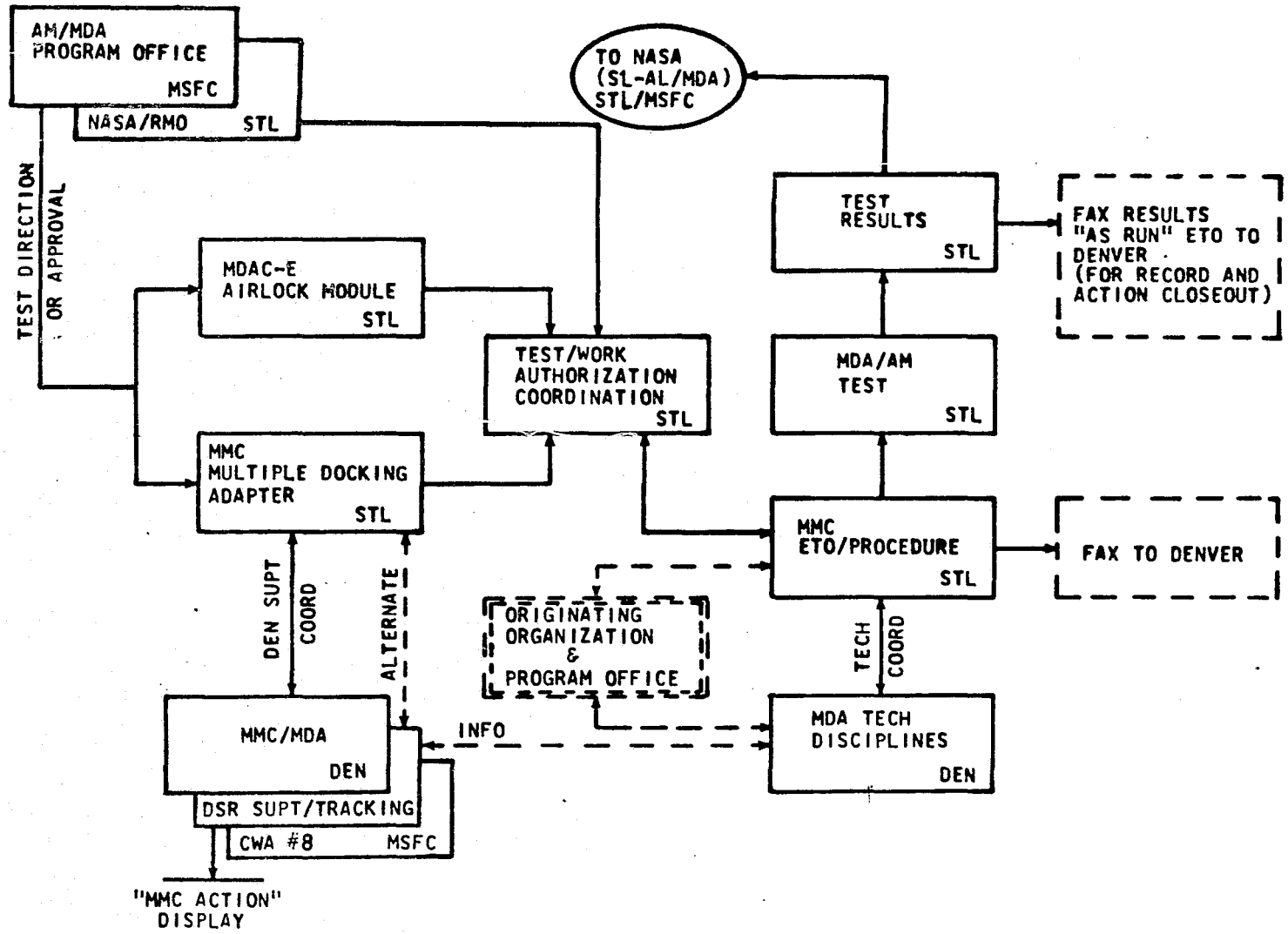

Figure 10.4-1 MDA Backup Article Mission Support Flow

10.5 VENDOR ON-CALL SUPPORT

The principal subcontractors to MMC-MDA on the Skylab program were maintained on contract throughout most of the mission period (through 12/73). Table 10.5-1 lists these firms and their hardware responsibility. All of these organizations were contacted prior to the mission start and specific individuals were identified as a point-of-contact in the event vendor support was required.

Accessory Products Company Division of Textron, Inc.	Valve, Equalization
AMETEK/CALMEC	Valve Assy., Manual, Astronaut Operated 1/4" 4" Vent Valve Assy., Motor Operated
AiResearch Manufacturing Co. Div. of the Garrett Corp.	Coolant Valve, Manual 4 Port, Selector
Actron Industries, Inc. Subsidiary of McDonnell Douglas Corporation.	Window Assy., S190
AMETEK/STRAZA	Bellows, Vent Line
Bendix Navigation & Control Division	Video Switch
Corning Glass Work	Panel Safety Shield S190 Window
HY-CAL Engineering	Transducer Temp., Surface
Instrument Division, Kratos	Gage Assembly, Pneumatic
Metal Bellows Corporation	Line, Coolant, Flexible (Avica)
McDonnell Douglas Astronautics Company	Sealing Device, Habitation Area Adapter Flange Assembly, Vent Sealing Device Fitting Assembly Seal
Optical Coating Laboratory, Inc.	Windows S191 and S192 Experiments
Servonic Division Gulton Industries, Inc.	Transducer Pressure, Absolute
Space-Flex Corporation	Duct, Flexible
Thermal Systems, Div. of Axial Corporation	Assembly Thermostat Heater Sys, Docking Tunnel, Thermostat Assembly

Table 10.5-1 Vendor Support

10.6 CONCLUSIONS AND RECOMMENDATIONS

The "total company" mission support team concept worked exceptionally well in helping the MDA meet its mission support responsibilities. The DSR, which served as a focal point for all MMC mission support activities, was the heart of this concept. A significant amount of information exchange and coordination between the diverse elements within the company supporting the several NASA centers came from this facility. In future long term space missions, it is recommended that each major contractor establish a communications, data, mission information and activity coordination center similar to the DSR.

The MMC MDA design groups prepared for their mission support role by taking part in mission simulations and developing detailed plans and procedures for their mission support efforts. This planning effort was rewarded by a smoothly functioning, flexible and responsive MMC MDA support team, demonstrating the usefulness of a strong planning effort.

From the module contractor standpoint, technical responsibility for problem analysis and work-around determination should remain within the affected design group(s). Their Skylab expertise permitted rapid assessment of the problem and timely and accurate problem solutions.

MMC mission support planning included the requirement for timely availability of the post acceptance (pre-launch) test data. This data was not available until well into the mission. No MDA mission problems occurred which necessitated this data and support capability was not compromised. However, MMC recommends that in order to make technical support potentially more responsive test data be made promptly available to the technically responsible Project Office.

11.0 NEW TECHNOLOGY

11.1 AEROSPACE APPLICATIONS

11.1.1 Application of Spacecraft Leak Criteria

The mass leakage rate of a spacecraft is larger at sea level than on orbit at the same pressure differential. This is primarily due to fluid density and varies somewhat with the type of structure and type of leakage path.

During the test definition phase of MDA, it was apparent that the use and value of a sea level to orbit factor was inconsistent among the various contractors and NASA Agencies, i.e., 1.0 to 2.6.

An analysis of available test data and a research of test history resulted in a factor of 2.4 for Denver testing and a 2.6 for St. Louis and KSC testing. These factors proved to be conservative by the Altitude Chamber Testing at St. Louis which indicated a factor of approximately 7.0. A comparison of preliminary flight data, to KSC test data, revealed a factor of approximately 4.4.

The leakage rate of the SWS in orbit has been determined to be approximately 20 percent of the allowable which further substantiates a conservative factor.

The application of the sea level to orbit leakage criteria to the MDA test program proved to be a significant factor in making it more efficient and timely.

11.1.2 Super Insulation

A description of the insulation blanket design and fabrication is stated in Section 2.2.1 of this report.

The innovations incorporated in the design are swiftachments and "boot hooks". Swiftachments were installed using a gun and replaced individual string hand ties. Boot hooks replaced thru-grommets for attaching the blankets to the vehicle. Both of these features allowed fabricating and installing the blankets at a significant reduction in cost and schedule on the MDA program.

11.1.3 Development of a Pressure Sensitive Adhesive System for the MDA Hatch Seal

A silicone pressure sensitive adhesive system was developed for the MDA hatch seals. The adhesive used was Dow Corning DC282 silicone adhesive catalyzed with 2.3% Huperco CST. The mixed adhesive was thinned with toluene and applied by brush to the seal and cured (See Section 2.2.1). This produced an adhesive system with excellent adhesion to the silicone rubber seal and moderate adhesion to aluminum. Thus when the seal is removed for replacement, the adhesive comes off with the seal and no adhesive is left on the aluminum. This allowed installation of the new seal with no cleaning of the aluminum substrate.

11.1.4 Application of Nonflammable Flexible Electrical Cabling System

A nonflammable system of protecting electrical cables was developed on MDA which allowed the cables to be fabricated outside the MDA on cable boards and then installed.

This replaced the original design which consisted of aluminum conduits and raceways.

The new cabling system makes cables nonflammable in an oxygen enriched atmosphere.

11.1.5 S190 Window

The S190 Window design successfully coupled very high optical quality with a very large optical viewing area and incorporated these features into a single-paned window assembly whose structural integrity, pressure sealing integrity and optical performance was demonstrated by extensive testing. The window also incorporated several other unique design features which were significant improvements over the technology then existing for spacecraft optical window. Considering its large size and combination of structural and optical requirements, the S190 Window was, in a practical sense, the best optical window that could be produced. Among the window's unique design features may be listed the following:

- Large viewing area - 21.75 x 16.00 inches
- Single pane of annealed optical glass - 1.60 inches thick
- Floating suspension system - springs on both sides of the glass and molded seal.
- Molded seal with redundant sealing lips, pressure activated and compatible with the operation of the floating suspension system.

- Use of an automatically controlled heating system to keep the window at a uniform temperature and thus minimize optical distortion in the glass.

11.2 OTHER APPLICATIONS

11.2.1 Development of a Pressure Sensitive Adhesive System for MDA Hatch Seal

A. Seals on refrigerator doors - present seal designs require disassembly of the interior of the door to replace the seal. Most people would not attempt to themselves, and replacement by a service man would probably run between $35 - $60. Therefore, people are content to pay more on their electric bills and allow the leakage of cold air out and warm air into their refrigerators. We feel this is a waste of energy which could be averted. A seal coated with pressure sensitive adhesive applied to a flat area around the door could easily be replaced by a consumer.

B. Washers, dryers and dishwashers - same as above.

11.2.2 Application of Nonflammable Flexible Electrical Cabling System

Protection of portable power cables used in oxygen enriched atmospheres, such as hospitals, research labs, oxygen generating plants, etc. It may also preclude fires and explosions in coal mines and other mining operations.

11.2.3 Application of Systems Test Integration Approach (To activation of large industrial plants, i.e., chemical plants, petroleum plants, etc.)

Technique would employ definition of test requirements, and preparation of test procedures for component and system level tests with the goal of significantly reducing time for a processing plant to go on-stream from the point of installation completion.

11.2.4 Revere Universal Weight and Center of Gravity Table

The Revere Universal Weight and Center of Gravity Table was procured by MMC, installed in the High Bay Clean Room, and checked out and put in operation to meet actual measurement requirements of the MDA. The system was designed to handle a total mass of 25,000 pounds. The system was specified and verified for a weight accuracy of .1% of applied load, and C. G. accuracy $\pm$ .02 inches.

The system consists of a table mounted on electronic load cells connected to an electronic readout with both visual and printed output. Alignment of the part being measured to the table coordinates is accomplished using tooling bars and optical instruments which are part of the system.

The feature of this system that puts it in the new technology category is versatility. Existing high precision devices are designed for specific applications, whereas, the Revere system developed for the MDA, is highly flexible and can be used for essentially any component or module.

11.2.5 Finite Element Analysis Applied to Automobiles

Response of an elastic structure, like an automobile, to the applied forcing functions can be done mathematically by modelling the structure with finite elements and adding discrete dampers like shock absorbers and bumper shock absorbers. This analysis would be a tool to aid in preliminary design.

The more difficult problem of analyzing an automobile collision would have to be attacked by the finite element method. The aerospace industry has a lot of experience with finite element analysis. Part of this experience involves two elastic bodies docking. There was no plastic deformation involved with the docking problem, but this experience could be a start for research into the collision problem.

11.2.6 Earthquake Analysis

The analysis of buildings in earthquake prone areas is done by the finite element method. Earthquakes can be statistically defined as a random forcing function. Current aerospace analytical methods involve finding the loads and stresses in finite element models forced by random forcing functions. The analogy follows a one-to-one correspondence. The contribution the aerospace industry could make is application of methods of handling large matrices sparse programming, consistent mass matrix generation, modal coupling, three dimensional computer plotting subroutines. The expertise is readily applicable.

11.2.7 Electrical Connector Pin Height Go/No Go Gauge and Light Tool

Two tools were developed by MMC to provide means to check and evaluate electrical connector pin heights and further to evaluate proper pin/socket mating. The tools developed are discussed in sufficient detail to present configuration, usage and justification.

A. Pin Height Gauge - The pin height gauge gives a very quick go/no go visual indication of adequacy of receptacle pin contact heights, with respect to the key feature of the receptacle coupling device, to insure adequate pin and socket contact engagement in mated plug and receptacles. The gauge measures all pin contacts in the receptacle, up to 61 pins including coax contacts, at one time.

(1) Description - The use of Air-Lock, Inc. coupling devices on Microdot, Inc. electrical connectors on the Gemini, Apollo and Skylab programs gives rise to possible open circuits, or worse yet, intermittent circuits, due to tolerance build-ups allowing inadequate engagement of pin and socket contacts. Since almost all of the Apollo and most of the Skylab components and cables had been assembled at the time this discrepancy was uncovered by MMC; an urgent need existed for a method to determine if assembled connectors were satisfactory.

The subject receptacle pin height gauge is basically a mating plug; except instead of wired contacts it contains accurately machined spring loaded gauge pins. When the gauge is mated to the receptacle each gauge pin is pushed up by each pin contact in the receptacle. If the gauge pin is raised to flush with or above the gauge surface, the corresponding receptacle pin is high enough. The gauge surface is a plane at the back of the gauge which is very accurately located with respect to the key coupling feature (ball location) of the gauge coupling nut.

The gauge goes to the very "business end" of the receptacle, the pin tip location with respect to the coupling feature; and, allows the maximum "buy in" of receptacles which otherwise might be rejected if intermediate tolerances had to be accommodated.

Each gauge is universal for N (normal), -1 and -2 polarizations of each insert arrangement, eliminating the need to procure separate gauges for separate polarizations.

(2) Usage - The gauges were procured and used on equipment throughout the Skylab cluster, and many receptacles have been found that were inadequate to insure electrical mating with worst case toleranced plugs.

The device has been successfully applied to the Microdot/Air-Lock connectors on Apollo, LM, and Skylab. With minor design changes for the coupling method, it would be appropriate for the pure Microdot connector receptacles, which have a history of suspected low pin contacts on Launch Vehicles and other equipment.

(3) Justification for Tool - There was no prior practice for determining pin height adequacy in Microdot/Air-lock connectors. The practice on pure Microdot connectors is to measure individual, suspect, low pins using a depth micrometer, measuring from the nose of the receptacle to the tip of the pin. This method is not applicable for the Air-Lock adapter because the adapter coupling feature is not precisely located with respect to the nose of the Microdot receptacle.

(4) Potential Tool Growth - This design principle is readily adaptable to all connector "families", including bayonet coupled, threaded, ball lock, etc. It could also be adapted to connectors which have the pin contacts installed in the plugs instead of the receptacles. With more precision in design and machining it could be adapted to plugs or receptacles with socket contacts. Such design, however, would verify the presence of an effective socket spring member as well as its location. There have been suspected near flight failures and known test failures due to missing or damaged socket spring members.

With extreme precision in machining this design can be extended to include adequate pin contact alignment as well as contact height.

B. Go/No Go Light Tool - The Go/No Go Light Tool was conceived and used as an aid when using the Pin Height Go/No Go Gauge. It is used to determine if the small metal gauge pins (0.035 dia) in an electrical connector pin height gauge are below or flush with/above the gauge go/no go surface. The light is essentially a continuity tester; except, instead of having two separate electrical probes, it has a single small probe divided into two electrically separated contact surfaces. If both halves touch the same conductive surface, the circuit is completed and the bulb lights.

(1) Description - The Go/No Go Light is simply a small indicator light assembled onto an individual 16 gauge connector pin contact which has been split into two electrically isolated contacts. The separate power supply is a pen light battery pack.

See the -029 assembly on Dwg. SK820TK7780 for the details and assembly of this device. In summary, the device is made from readily available parts and materials using simple machine shop practices.

This device was designed as an inspection aid for an electrical connector pin height gauge. Its purpose is to eliminate the visual judgment from the determination of whether the metal gauge pins in the connector gauge are below or flush with/above the nonmetallic go/no go surface. The probe is placed over the gauge pin in question and if the gauge pin is high enough to be touched by the probe, the bulb lights. If the gauge pin is below the go/no go surface, it cannot be touched by the probe and the light does not light.

Since the device depends only on flat surfaces, the tolerance on the accuracy of its measurement is essentially zero. If a device with sliding contacts were used, its accuracy would depend on the machining accuracy of the many individual parts, as well as the accuracy of assembly. This device is also electrically independent of the electrical circuits in the connector under inspection. It does not require passing a current through, or applying a voltage to, the contacts of the connector. Such currents or voltages could be very hazardous to the circuit elements connected to the connector under inspection.

(2) Usage - In its existing form, this device is useful in determining if a surface is conductive, or if any particular location on a surface is conductive.

The original device was essentially used as a depth indicator (flush with/above) light. With fixed or adjustable insulated stops added along its length, it could be used to "measure" the depth of any conductive surface in almost any recess. Such application would include the measurement of press fits or adjustments to determine if an internal part had been engaged far enough, or too far, into the external part.

(3) Justification for Tool - This device is the only known single probe conductivity tester or continuity tester.

This device was originally designed to be used with the electrical connector pin height gauges designed to implement the requirements of MSFC Alert No. 72-4.

(4) Potential Tool Growth - The uses of a "single" probe conductivity or continuity light are limited only by the need for such a light. The probe could be made much smaller, or larger, if needed. It could also be designed as a single unit by including small "hearing aid" or electric watch batteries and a small light bulb or a light emitting diode.

With a spherical tip, or tips, it would be useful as go/no go light for measuring internal diameters, or depth of chamfers/tapers. This shape would also be useful in determining the presence of effective internal spring members in electrical socket contacts.

With more widely spaced contacts, it would be useful as a go/no go light in determining the perpendicularity of any conductive surface with respect to the axis of the probe.

12. CONCLUSIONS AND RECOMMENDATIONS

The MDA was developed and utilized on the Skylab Program without any significant problems. Its performance on-orbit, was, we believe, exemplary in that it successfully accomplished all objectives and, in fact, demonstrated its versatility when called upon to facilitate several OA contingency operations encountered during the mission. The problems encountered during prelaunch testing and their impact on the established schedule were minimal.

12.1 MISSION PERFORMANCE

The following discussion summarizes the MDA performance during the Skylab Mission and presents recommendations for consideration in the design of future manned spacecraft systems.

A. Structures

(1) Conclusions - The MDA Structure performed its functions without any problems throughout the Skylab mission. Besides meeting all requirements for the nominal mission, structural hardware successfully accommodated contingency conditions that occurred during flight. The MDA withstood the high temperatures resulting from the high pitch angle during the first two weeks of the mission. It provided support for the Rate Gyro 6-Pack, installed by the SL-3 crew, and for the fan which was used to cool the gyros. MDA mechanisms functioned satisfactorily and all three crews commented on their ease of operation.

(2) Recommendations

(a) Use of self-locking blind fasteners and inserts should be restricted to permanent one-time installations. Equipment that may be removed for preflight checkout of in-flight maintenance should use replaceable nuts and bolts to prevent damage to hardware that may be difficult or impossible to replace.

(b) Structural glass windows must be flaw-screened to eliminate invisible defects that could result in service failures. The flaw screening test should be based on a fracture mechanics

analysis and should simulate flight loading to assure that all areas of the glass are adequately screened. After testing, all surfaces should be protected to prevent introducing any new flaws in the glass.

(c) Mechanical drives of the type used for the MDA window external cover provide a simple and reliable means for controlling external components. The use of similar devices is recommended for future spacecraft designs.

B. Environmental Control System (ECS)

(1) Conclusions - The MDA ECS performed as designed throughout the total Skylab Mission.

Some ECS hardware was utilized for functions and time periods which were not part of the original design requirements. These unplanned functions included the use of the axial hatch pressure equalization valve as a means through which the MDA atmosphere could be sampled prior to SL-2 activation, and the operation of Cabin Fan No. 2 during storage periods to provide cooling of the 6-Pack rate gyros. All ECS limited life hardware, except cabin fans, had additional operating time or cycles remaining at the end of the 84-day SL-4 mission. The as-flown mission required that all three MDA fans exceed their design life of 3360 hours, but all performed satisfactorily. All MDA ECS hardware performed as designed with no anomalies.

(2) Recommendations - Components and tubing within the ATM C&D coolant loop consisted of a combination of aluminum alloys and stainless steel. Because the various materials were in contact within the fluid loop, there was concern for possible corrosion problems. See Page 2-96 for further discussion of the coolant loops material concerns.

It is recommended that all fluid systems on future programs be made from similar materials and not include a combination of metals.

C. Thermal Control System

(1) Conclusions - The MDA TCS performed as designed, throughout the total 8-month Skylab Mission.

When sufficient power was available, and the wall heaters were thermostatically controlled, the TCS kept the MDA within the crew comfort box. The system was exposed to several off-nominal conditions, during various orbital periods, but there was no evidence of TCS hardware malfunctions.

(2) Recommendations

(a) Analysis vs Test - The MDA thermal effort involved many analyses because of the desire to reduce expensive testing. In some cases, testing would have been less expensive, and would have provided more assurance of a successful product. One case involved an extensive analysis performed to predict the ascent venting characteristics of the multi-layer insulation blanket. This type of engineering problem does not lend itself well to an analysis. A test could have been set up and conducted for a fraction of the cost that it took to do the analysis.

It is recommended that future programs give careful consideration toward running brief tests as a potential cost savings to certain analysis tasks.

(b) Thermal Characteristics of Electrical Components - Prior to flight, a defect in the S190 window controller was identified. The problem was due to thermal design on the circuit board level. Some electrical components were predicted to exceed allowable temperatures in a Zero-G environment. This was due to the lack of natural convection in space. The controller was modified prior to flight and tested in a near vacuum to prove the ability of the design to be compatible with no natural convection.

A similar problem with overheating electrical components, on the circuit board level, was found on the Backup Inverter Lighting Control Assembly (BILCA). A thermal fix was incorporated on a transistor to assist heat dissipation. Once again a test at near vacuum conditions verified ability of the design to dissipate heat.

It is recommended that future design reviews of spacecraft electronic assemblies specifically address the possibility of overheating at the component level.

(c) Instrumentation - Temperature sensor placement on the MDA allowed for thorough monitoring of the MDA thermal performance. However, several recommendations are made concerning the instrumentation:

- The S190 window was closely monitored during the mission due to the possibility of moisture condensation on its internal surface. Many analyses were performed to extrapolate measurement values from nearby instrumentation in order to predict window temperatures. A temperature transducer, located on the internal surface of the window, would have eliminated much analysis and given accurate real time information. It is therefore recommended that future spacecraft windows, that are sensitive to temperature, be equipped with temperature transducers wherever possible.

- The axial docking port had two separate temperature transducers to monitor temperature. Shortly after launch, when the cluster was put in the pitch-up attitude, the temperature transducers in the axial tunnel pegged out on the high side at 113°F. Analyses had to be performed to estimate the true maximum temperature. It is, therefore, recommended that wherever redundant or dual instrumentation is provided on future spacecraft, consideration be given toward making the calibration ranges different in order to allow for contingencies.

- The two measurements of dew point temperature (C0207 & C0215) were lost many times during the three manned missions due to shutdown of the molecular sieve fans. It was necessary to power down the fans as part of a power management procedure to conserve electrical power during EREP and other maneuvers. Likewise, the measurement of I/LCA base plate temperature was lost each time the I/LCA was powered down.

The aforementioned difficulties complicated the real time decision making process and made post-flight data reduction and analysis less accurate.

It is recommended that in future designs, such difficulties be circumvented by designing the measurement system to be independent of the ON/OFF status of the measured component. In some systems, this can be accomplished by supplying sensor excitation from a separate source such as an instrumentation power supply rather than from the component which is being measured, but in others, this may require some additional hardware.

D. Electrical

(1) Conclusions - The MDA Electrical System performance of all missions and orbital storage was satisfactory. The first two weeks of the SL-1 mission, the MDA Electrical System demonstrated its capability to function under extreme environmental conditions. During this time, the axial tunnel exceeded the temperature range of the instrumentation. Using a modified thermal computer model, the maximum temperature of the electrical connectors was predicted. Electrical connector tests were performed to establish confidence in the hardware during this abnormal environment. The successful use of these connectors during manned missions demonstrated the adequacy of their design.

(2) Recommendations -

(a) SL-2 crew comments on the Interior MDA Lighting were that illumination levels at the ATM C&D Panel are marginal for reading and writing and that when working at a work

station, if they turned their heads they were looking directly into the lights.

The SL-4 crew stated in their debriefing that because of the personal preference associated with the lighting level, they would like to have had control of the lighting around the ATM Panel at the panel, itself.

For the situations described above, the following recommendations should be considered:

Two types of lighting should be used; i.e., general, and workstation lighting:

- General lighting should provide illumination levels required for movement within the vehicle and access to stowage containers. The general lighting should be indirect and continuously dimmable.

- Workstation lighting should be close to the control panel such as in hand rails around the panels. A specific area should be provided for reading and writing such as an extension of the control panel where reading and writing material could be clipped in place. The illumination should be directed toward the panel and should be continuously dimmable at each work station.

(b) During SL-2, SL-3 and SL-4 missions, it was found that the allocation of high power accessory outlets was not adequate for contingencies. It is recommended that additional outlets be provided on future manned space missions.

(c) The need existed to operate portable equipment in the MDA during unmanned phases of the mission. The power source for the portable equipment (high and low power utility outlets) was not controllable from the ground. It is, therefore, recommended that at least one high and one low power outlet be controllable via DCS command.

(d) Trouble-shooting during ground test activities was difficult and time consuming due to lack of circuitry access. Terminal junctions incorporated into the MDA Electrical System would have enhanced ground test, trouble-shooting, in-flight maintenance and incorporation of in-flight modifications.

(e) The SL-4 crew suggested for future missions that cabling associated with portable equipment be color coded for easy identification, and dispensed out of cable caddies with coil spring returns. MMC concurs with these recommendations but suggest a crank return be used instead of a spring return.

(f) An evaluation of MDA connectors was performed as part of the postflight data analysis and crew debriefings. The results were that all MDA connectors (NB, Micro-dot Airlock, and Zero-G) were functional in space environments. For in-flight mating and demating, the crew expressed a preference for both the Micro-dot and Zero-G connectors. The crew also suggested that in future space applications, the in-flight maintenance connectors should be standardized throughout the spacecraft. MMC concurs with the recommendation for standardization of crew in-flight maintenance connectors.

E. Communications

(1) Conclusions - The communications system operated with minimal problems during the entire Skylab Mission.

(2) Recommendations - The three crews had various comments concerning the operation of the system. The recommendations which follow are based on these comments as well as observation during mission support tasks.

To expedite intercom usage and prevent erroneous switch usage, more consideration should be given to different types of switches or switch actuating mechanisms. Such panels that are utilized

extensively by crew members should be designed for efficient interfacing from any attitude in a Zero-G environment. It is also recommended that personal communications assemblies be developed to permit crew communication from any location and any attitude with each other and with the ground. This assembly should incorporate a transmitter/receiver, an earpiece and receiver volume control with an alert tone when volume is too low and the received signal is not being amplified to a preset level. This concept would give considerably more freedom to crew members, eliminate cables and eliminate the feedback problem.

F. Television

(1) Conclusions - The Skylab Television (TV) system was well utilized throughout the mission. It provided real and delayed time information regarding the performance of experiments and the progress of various repairs performed during the missions. The crews had little trouble with the operation of the system.

(2) Recommendations - The crew had various comments concerning the overall system and the need for improvements for future missions. They recommended a system status light for similar systems as expansive as the one employed in Skylab. If one TVIS was inadvertently left on, the ground did not receive TV. A status light would contribute to the avoidance of any data loss. The crew also recommended a large monitor, finding it difficult to focus the picture with the minimonitor. It is our recommendation that an overall TV control panel be used on future flights where all equipment could be remotely monitored and operated.

From our experiences during the development and testing of various flight equipments, the following general suggestions are offered for future programs.

(a) A Thermal Cycle Test should be part of a unit's Acceptance Test Program.

(b) Cabling should be uniform.

G. Instrumentation

(1) Conclusions - The Instrumentation system performed exceptionally well during the entire mission. The Signal Conditioner was operated continuously without failure. A trend analysis, performed during the mission, confirmed the stability of the circuits.

(2) Recommendations - The equipment, while reliable, employed outdated packaging concepts due to an early decision to use already developed hardware. Future programs should take advantage of state-of-the-art packaging concepts to reduce the weight and size of operational equipments.

H. Crew Systems

(1) Conclusions - The MDA from a crew systems standpoint met all its functional objectives and performed successfully as an experiments/stowage module for all the Skylab missions. There were no MDA problems or anomalies that prevented the accomplishment of scheduled functions or the gathering of scientific data. The minor anomalies that did occur were easily solved by the crew or worked around, allowing the scheduled events to be conducted.

A number of the MDA crew stations received excellent crew comments, especially those fitted with the triangular grid foot restraint platforms. All MDA crew stations provided appropriate interfaces to allow them to successfully gather experiment data.

MDA performance beyond design was provided on the SL-3 and SL-4 missions when a Rate Gyro Six Pack assembly was installed (SL-3) in the MDA to replace the function of the failed rack mounted gyros. The MDA was used as an on-orbit suit stowage location and also as a sleep module by at least one member of each mission.

(2) Recommendations - Future equipment designs should capitalize significantly if the Skylab experience and crew insights are used in hardware development stages. A significant observation was the excellence of crew stations in the MDA fitted with the triangular grid foot restraints. It is recommended that all crew stations involving long duration tasks incorporate triangular grid foot platforms. More temporary stowage restraints, such as velcro, and bungies at the work positions would further improve future crew stations.

Mockup and trainer orientations were carried over into the on-orbit activities and preferred by the crew. Future manned systems should reflect this preference and provide more of a "one g" environment, e.g., a floor and a ceiling. Experience also suggests that more wall space be used as work and stowage areas as was accomplished in the MDA.

Skylab has demonstrated that established human engineering criteria was most useful in equipment design development. Future manned systems should benefit from the established principles used and validated in Skylab.

12.2 TESTING

The following discussion presents conclusions and recommendations regarding the MDA Test Program. The conclusions discuss the overall test program and the value of the MDA Backup Article for Mission Support. The recommendations presented should be considered as candidates for improvement of future space programs that may involve hardware and prelaunch test programs approaching the sophistication of Skylab.

A. Conclusions - The soundness of the total test integration concept employed on the MDA program was adequately demonstrated by the excellent performance of the MDA throughout the Skylab mission. This concept utilized formal control of all phases of the test program. It started with top level test plans for overall component and system level test definition. Implementation of these plans was then identified by specific test requirements documentation for component acceptance, qualification, and system level tests. Finally, successful demonstration of component and system level test performance

was effected by Test Operations personnel and their use of test procedures witnessed by the applicable quality organizations. Sufficient flexibility for various hardware problem investigations and resolutions was provided by the "Engineering Test Order (ETO)" system for both on- and off-module testing with minimum schedule impact.

The value of maintaining the MDA Backup Article in readiness to support the Skylab Mission was evidenced by the sixteen ETOs performed on this testbed at St. Louis. These tests measureably contributed to solving real and contingency type on-orbit problems.

B. Recommendations - The total test integration approach utilizing top level test plans, specific test requirements documents (component and system level), and acceptance test procedures for test performance and demonstration should be maintained on future programs similar to the MDA. Some improvements, particularly in the mechanics of implementation, could be provided by the following:

(1) Provide a Top Test Procedure Document - This document would identify procedures in which the various systems test requirements were scheduled to be satisfied. The Flight MDA Program identified this information in the Systems Test and Checkout Requirements document (STACR). However, as a result of program changes, many Class I changes were created in the Type I STACR. A Top Test Procedure with a contractual Type III designation would have significantly reduced the STACR change traffic.

(2) Provide a Component Acceptance Test Plan - This plan should identify component level acceptance tests on an overall basis. We believe this would provide better program visability and uniform acceptance test information for use by the applicable design sections.

(3) Provide a Program Verification Document - This document should identify all verification methods that are planned to assure compliance with the requirements of the Contract End Item Specification (CEI) or other program source specifications. The MDA program achieved these goals by utilizing

Section 4 of the CEI, which identified how each Section 3 requirement was to be satisfied (test, analysis, or assessment). It also made use of the various program test compliance matrices. Providing this information in one document, we believe, would be more efficient and would improve the visibility of the overall program verification requirements.

12.3 SUPPORT

A. Prelaunch - Contractor support to MDA prelaunch and launch activities was timely and effective, and contributed significantly to the successful launch of the Skylab workshop. Major accomplishments resulting from these activities were:

- Delivery of mod kits to KSC.
- Test and checkout of mod kits using Backup and/or One-G Trainer Articles to preclude Flight Article problems.
- Timely closeout of changes at KSC by "Fast Response" team.
- Establishment of adequate spares at KSC.
- Assignment of key personnel to all work shifts to assure proper and timely preparation of MDA for launch.
- Support to program reviews on a demanding schedule without delay.

All MDA components were qualified and assessed to be flight-worthy at the Flight Readiness Review. The final flight hardware performed properly during the series of prelaunch tests including those conducted for the first time, such as the MDA/CSM docking test, with no significant schedule delaying hardware, or systems problems encountered.

B. Mission - The MMC MDA design groups prepared for their mission support roles by developing detailed plans and procedures describing their mission support effort. These plans and procedures were tested and revised through participation in pre-mission simulations and were integrated into the total MMC mission support effort. The MDA and other MMC support planning efforts were implemented using a "total company" team effort

employing a central facility, the Denver Support Room (DSR). This facility served as a focal point for all mission support activities. It was used as a single mission information, communications, data and activity coordination center between the MDA groups and the NASA centers. The resulting success of the MDA effort was due, in part, to their timely and accurate responses to all related mission problems.

This effort illustrated that a flexible and resourceful mission support team could be developed through adequate pre-planning, simulation, dedicated integration facilities and a total team commitment to technical excellence.

C. Conclusions - Our support of the Skylab activities at KSC and subsequently during the mission reflected the Martin Marietta Corporation commitment to provide a successful MDA Spacecraft that in turn would be expected to significantly contribute to the success of the Skylab mission. We believe that the effectiveness of this approach was demonstrated in the timely launch of the SWS and the highly successful performance of the module and related subsystems during the mission.

D. Recommendations - We firmly recommend that future spacecraft contractors, whether they are responsible for hardware or perform some other supporting role, continue to utilize the entire resources at their command in fulfilling their commitment to program support. We believe we have done this in our support of Skylab and can make no better recommendation than for the continuance of this total commitment by all support organizations.

13. REFERENCES

This section is limited to the identification of Martin Marietta Corporation (MMC) documentation referenced in this report. All government publications identified herein can be obtained from the Marshall Space Flight Center (MSFC) Repository. All Service Engineering Department Reports (SEDRs) are available in the applicable Airlock Module (AM) Acceptance Data Package (ADP) (Flight or Backup).

The following MMC documents are available in the applicable (Flight or Backup) ADP and the MSFC Repository:

A. Drawings -

82000000205 - Design Criteria, Materials Processes and Finishes
82000000304 - Automated Wiring System
82000000335 - Details and Assemblies, Standoff Frame
82000000401 - Electrical Schematics, MDA
82000000503 - Equipment and Wiring Harness Installation - Interior
82000000603 - Equipment and Wiring Harness Installation - Exterior
82000000713 - MDA Cabling Interconnect Diagram
82000000721 - Details and Assemblies, Radiator and Meteoroid Shield Support
82000000900 - MMC Acceptance Tests
82000000916 - Equipment Specification, Power Distributor Assembly
82000001000 - Signal Conditioning Assembly
82000001016 - Equipment Specification, Signal Conditioner Assembly
82000001018 - Test Specification, Range Cards
82000001026 - Range Card Assembly
82000001027 - Range Card Electrical Schematic
82000001505 - Design Criteria, Electrical System, MDA
82000001720 - Duct Assemblies, ECS Area Fan Outlet
82000001816 - Light Switch Specification
82000003800 - Top Assembly, TVIS
82000003801 - Top Assembly Schematic, TVIS
82000003816 - TV Input Station, Equipment Specification
82000003826 - Case and Cover, TVIS
82000003827 - Input Filter, TVIS
82000003828 - Inductors, Input Filter, TVIS
82000003829 - Preregulator, Converter, TVIS
82000003830 - Transformers and Inductors, DC-DC Converter
82000003831 - Output Filter, TVIS
82000003832 - Inductors, Output Filter, TVIS
82000003833 - Amplifier, TVIS
82000008200 - Outlet Box Assembly
82000008520 - Muffler Assembly, Inlet

82000008620 - Muffler Assembly, Outlet
82000009100 - MMC Acceptance Tests
82000009820 - Valve Assembly, Manually Operated, Vacuum Shutoff
82000040320 - Valve, Equalization, Pressure
82000042920 - Contingency Cables
82051000010 - Critical and Limited Life Component Drawing
PD3200048 - Line, Coolant, Flexible
PD4400011 - Bellows, Vent Line
PD4700181 - Coolant Valve, Manual, 4-Port Selector
PD6000195 - Duct Flexible
PD6000202 - Heater System, Docking Tunnel
PD7100078 - Video Switch
PD7400081 - Pressure Transducer
PD7400082 - Temperature Transducer
PD7400083 - Thermostat Assembly, Wall Heater
PD8300139 - Gage Assembly, Pneumatic

B. Reports

(1) General/Plans

ED2002-1002 - Reliability Plan
ED2002-1003 - Quality Program Plan
ED2002-1004 - Configuration Management Plan
ED2002-1005 - MDA General Test Plan
ED2002-1008 - System Safety Plan
ED2002-1032 - EMC Control Plan
ED2002-1072 - Fire Detector Implementation
ED2002-1264 - Structural Test Article Loads
ED2002-1550 - Television Input Station Report
ED2002-2002 - GSE Description Document
ED2002-2004 - Failure Modes Effect Analysis
ED2002-2010 - Launch Loads Analysis
ED2002-2017 - Design Safety Analysis
ED2002-2020 - System Test and Checkout Requirements
ED2002-2021 - Materials List
ED2002-2025 - EMC Test Plan
ED2002-2028 - Critical Items List
ED2002-2032 - Backup System Test and Checkout Requirements
ED2002-2033 - Launch Loads Analysis
ED2002-2040 - Postdelivery Operations Plan
ED2002-2045 - MDA Planned Work at KSC
ED2002-2048 - Hatch Seal Tests

(2) Qualification Test Reports/Procedures

(a) Martin Marietta

M-64-119	MMC Supplier Quality Assurance Program Requirements Document
3179	Signal Conditioner
3180	Power Distributor Assembly Procedure
3181	Muffler Assembly
3183	Outlet Boxes Procedure
3184	Diffuser
3278	TV Input Station
3300	Manual Operated 4" Vent Valve
3310	Fan Shroud Assembly
3512	TV Input Station (Δ Qualification)

(b) Subcontractor

Accessory Products Co. 500200-1: Pressure Equalization Valve

Actron HWS-190-D1-9-1: S190 Window Assembly

Actron HWS-190-D1-9-2: Heater Controller/Cable Assembly

Actron ETL(R)-73-002: Heater Controller Delta Qual.

AETL 5350-00-9023: Flexible Coolant Line

AETL 5350-00-9171: Wall Heater Thermostat

AETL 5350-00-9237: Docking Tunnel Heater System

AETL 5310-00-9627: Coolant System Flexible Hose

AiResearch 71-7933: 4 Port Selector Valve

Ametek/Calmec CM512: 1/4" Battery Vent Valve

Ametek/Calmec CM605: 4" Vent Valve

Ametek/Straza 8-480119: Bellows Vent Line

Bendix 5426A: Video Switch

Bendix MT-17701: Video Switch Delta Qual.

Durkee Test Labs QT8619: Flexible Hose, Coolant System

Durkee Test Labs QT9060: Flexible Hose, Coolant System

Gulton Industries 3031-11801: Pressure Transducer

Hy-Cal Engineering 70-522A: Temperature Transducer

James, Pond and Clark QTR-557: Coolant Selector Valve

Kratos KER-681: Pneumatic Gage Assembly

Lyon Environmental Lab 71-341: Flexible Duct

C. Procedures

(1) Denver

MDA-OCP-D-10001 - Caution and Warning System Test
MDA-OCP-D-20001 - Insulation Purge System Test
MDA-OCP-D-20002 - Environmental Control and Vent System Test
MDA-OCP-D-20003 - Final Insulation Purge System Test
MDA-OCP-D-30001 - Proton Spectrometer Test
MDA-OCP-D-30003 - S009 Functional Test
MDA-OCP-D-30021 - Radio Noise Burst Monitor (RNBM) Functional Test
MDA-OCP-D-40001 - Communications Systems Test
MDA-OCP-D-40002 - Television System Test
MDA-OCP-D-50001 - MDA Mechanical Devices Functional Test
MDA-OCP-D-50002 - MDA Leak and Decay Test
MDA-OCP-D-50003 - MDA Shipping Cover Leak Test
MDA-OCP-D-50004 - S190 Window Cover Test
MDA-OCP-D-50006 - MDA Final Leak Test
MDA-OCP-D-60001 - Ground Isolation and Power Transfer Test
MDA-OCP-D-60002 - Electrical System Test
MDA-OCP-D-60003 - Wall Heater Thermal Test
MDA-OCP-D-60004 - Light Filter Illumination Verification
MDA-OCP-D-70001 - Instrumentation System Test
MDA-OCP-D-80001 - Crew Compartment Fit and Functional C^2F^2 Test

(2) St. Louis - The following documents are available in the Backup Article (ADP):

MDA-OCP-S-20002 - Vent Valve Operation and Leak Rate Verification Test
MDA-OCP-S-30002 - M512 Functional Test
MDA-OCP-S-30004 - BI/LCA Functional Test
MDA-OCP-S-30010 - Leak Check of the ATM C&D/EREP Coolant Loop
MDA-OCP-S-30018 - Simulated Flight Test
MDA-OCP-S-30025 - I/LCA Functional Verification
MDA-OCP-S-30026 - ATM C&D Installation Verification Test
MDA-OCP-S-30027 - ATM C&D Functional Verification
MDA-OCP-S-30050 - EREP Ground Isolation Verification
MDA-OCP-S-30054 - EREP Super System Functional Interface Verification
MDA-OCP-S-40002 - TV/VTR System Functional Test
MDA-OCP-S-60002 - S190 Window Heater Controller System Verification
MDA-OCP-S-60005 - Performance Test of MDA Fan Assemblies
MDA-OCP-S-80001 - Crew Compartment Fit and Functional (Horiz)
MDA-OCP-S-80003 - Flight Crew and Equipment Stowage and Config.
OMT-OCP-S-20032 - OMT-S193 Off Module Test Procedure
OMT-OCP-S-30036 - EREP Support Equipment Field Support Test Procedure
OMT-OCP-S-30041 - OMT-S192 Functional Interface Verification
OMT-OCP-S-30042 - OMT-S193 Off Module Test Verification
OMT-OCP-S-30044 - EREP System Bench Functional Interface Verification
OMT-OCP-S-30046 - EREP Support Equipment Bench Functional Interface Verification

(3) Engineering Tests - The following Engineering Test Orders were employed on the Backup MDA:

MDA/SL/BU/78 - TV Contingency Cable Test
MDA/SL/BU/79 - BI/LCA to ATM C&D Console Functional Verification
MDA/SL/BU/80 - BI/LCA to ATM C&D Console Functional Verification
MDA/SL/BU/81 - EREP ESE Checkout
MDA/SL/BU/82 - S193 Experiment Checkout
MDA/SL/BU/83 - EREP Expanded Systems Test
MDA/SL/BU/84 - BI/LCA to ATM C&D Console Functional Verification
MDA/SL/BU/85 - EREP EDDU Functional Verification Test
MDA/SL/BU/89 - BI/LCA to ATM C&D Console Functional Verification
MDA/SL/BU/90 - BI/LCA to ATM C&D Console Functional Verification
MDA/SL/BU/92 - EREP Coolant Tube Evaluation
MDA/SL/BU/93 - EREP Coolant Loop Evaluation
MDA/SL/BU/94 - MDA Work Station Evaluation
MDA/SL/BU/95 - Radial Hatch/Docking Probe Interference Test
MDA/SL/BU/96 - Determination of AM/MDA EMI Noise Levels in Support of SL-1
MDA/SL/BU/97 - Multipurpose Electrical Furnace (MEF) Control Package Flammability Specimen Mounting Ring Electrical Resistance Test
MDA/SL/BU/98 - Removal of MDA Cabin Fan #2 Diffuser With In-Flight Maintenance Tools
MDA/SL/BU/99 - Fit Check of S082 Timer Cable
MDA/SL/BU/100 - Fit Check of ATM TV Bus Redundancy Connector Module
MDA/SL/BU/101 - Timer Cable Crew Interface
MDA/SL/BU/102 - Fit Check of S082 Timer Cables
MDA/SL/BU/103 - Fit Check of Two TV Bus Connector Modules
MDA/SL/BU/104 - Radial Docking Port Insulation Blanket Removal Verification
MDA/SL/BU/105 - Fit Check of Cable for the "Carry Up" Rate Gyro Package
MDA/SL/BU/106 - MDA Ground Measurements Analysis
MDA/SL/BU/107 - M518 Power Adapter Assembly Test
MDA/SL/BU/108 - Fit Check of Flight S082 Timer Cable
MDA/SL/BU/109 - Evaluation of Screw Removal Tools

(4) Miscellaneous

SL-8841-70-2: MDA Maintenance Requirements
SL-8841-70-3: Operation, Maintenance, and Handling Procedures for MDA-GSE
SL-8841-70-4: Operation, Maintenance, and Handling Procedures for MDA TV-GSE
SL-8841-70-6: MDA In-Flight Maintenance Data

APPROVAL TMX-64812

MDA FINAL TECHNICAL REPORT

By Martin Marietta Corporation

The information in this report has been reviewed for security classification and it has been determined to be unclassified.

This document has also been reviewed and approved for technical accuracy.

P. A. McCool

for James N. Strickland
AL/MDA Project Office

NASA TMX-64812

APPROVAL

MSFC SKYLAB MULTIPLE DOCKING ADAPTER FINAL TECHNICAL REPORT

AIRLOCK/MULTIPLE DOCKING ADAPTER PROJECT OFFICE

The information in this report has been reviewed for security classification. Review of any information concerning Department of Defense or Atomic Energy Commission programs has been made by the MSFC Security Classification Officer. This report, in its entirety, has been determined to be unclassified.

This document has also been reviewed and approved for technical accuracy.

J. McCool
Project Manager, Airlock/Multiple Docking Adapter

R. Ise
Program Manager, Skylab Program Office

REPRODUCIBILITY OF THE ORIGINAL PAGE IS POOR