Langley

NATIONAL AERONAUTICS AND SPACE ADMINISTRATION
WASHINGTON, D.C. 20546

REPLY TO ATTN OF: GP

APR 10 1974

TO: KSI/Scientific & Technical Information Division
Attn: Miss Winnie M. Morgan

FROM: GP/Office of Assistant General Counsel for Patent Matters

SUBJECT: Announcement of NASA-Owned U.S. Patents in STAR

In accordance with the procedures agreed upon by Code GP and Code KSI, the attached NASA-owned U.S. Patent is being forwarded for abstracting and announcement in NASA STAR.

The following information is provided:

U.S. Patent No. : 3,798,741

Government or Corporate Employee : McDonnell Douglas Corp. St. Charles, MO. (formerly - Conduction Corp.)

Supplementary Corporate Source (if applicable) : ~

NASA Patent Case No. : LAR-10,409-1

NOTE - If this patent covers an invention made by a corporate employee of a NASA Contractor, the following is applicable:

YES ☒ NO ☐

Pursuant to Section 305(a) of the National Aeronautics and Space Act, the name of the Administrator of NASA appears on the first page of the patent; however, the name of the actual inventor (author) appears at the heading of column No. 1 of the Specification, following the words "...with respect to an invention of ..."

APR 1974 RECEIVED NASA STI FACILITY INPUT BRANCH

Bonnie L. Woerner

Bonnie L. Woerner
Enclosure

United States Patent [19]

Fletcher et al.

[11] **3,798,741**

[45] **Mar. 26, 1974**

[54] **METHOD OF FABRICATING AN OBJECT WITH A THIN WALL HAVING A PRECISELY SHAPED SLIT**

[76] Inventors: **James C. Fletcher,** Administrator of the National Aeronautics and Space Administration with respect to an invention of; **P. A. Christopher; W. J. Gross; W. H. Henley; B. D. Swirsky**

[22] Filed: **Mar. 13, 1973**

[21] Appl. No.: **340,864**

[52] **U.S. Cl.** **29/423**

[51] **Int. Cl.** **B23p 17/00**

[58] **Field of Search** ..... 29/423, 156.8 H, 557, 558

[56] **References Cited**

UNITED STATES PATENTS

2,544,934	3/1951	Nase	250/27.5
3,043,147	7/1962	Will, Jr.	74/5
3,461,524	8/1969	Lepselter	29/423 X
3,564,682	2/1971	Carroll, Jr. et al.	29/25.17

Primary Examiner—Charles W. Lanham
Assistant Examiner—V. A. DiPalma
Attorney, Agent, or Firm—John R. Manning; Howard J. Osborn; Wallace J. Nelson

[57] **ABSTRACT**

A method of making a structure having a cavity and having a thin wall with a precisely shaped slit. An object having a cavity having two openings, one of which is to be closed by a thin wall with a slit, is placed on the surface of a fixture. The fixture surface has a slot conforming to the size and shape of the slit to be formed in the thin wall, and a shim member is inserted into the slot such that it extends into the slot a distance deeper than the desired thickness of the thin wall and such that it extends above the surface of the fixture and into the cavity of the superposed object. The object and fixture are fixed in position with the slot properly located in the position of the slit to be formed, and the cavity is filled with a molten settable material from its other end. After the molten material has set, the object is separated from the fixture, the shim adhering to the set composition in the cavity of the object. The surface of the object which was adjacent the fixture is then provided with a plated metal layer over the opening to be provided with a thin wall. The plated layer is then machined such that the layer, in the area covering the cavity opening, has the desired thickness of the thin wall being provided. The settable material is then melted out. The shim is then removed by selective etching to produce the desired structure.

10 Claims, 6 Drawing Figures

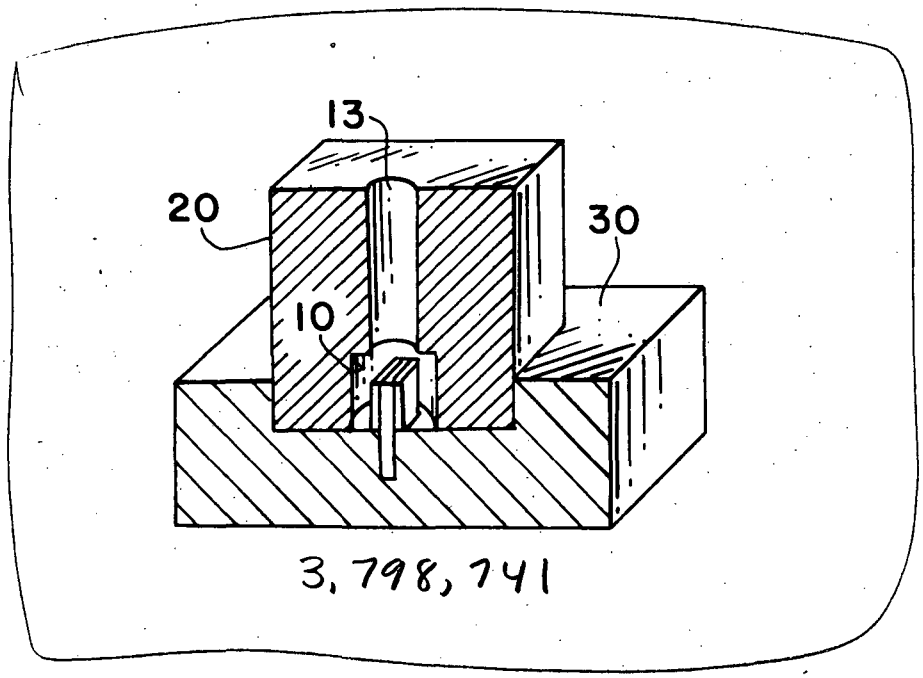

(NASA-Case-LAR-10409-1) METHOD OF FABRICATING AN OBJECT WITH A THIN WALL HAVING A PRECISELY SHAPED SLIT Patent (NASA) 5 p CSCL 13H

N74-21059

Unclas

00/15 33986

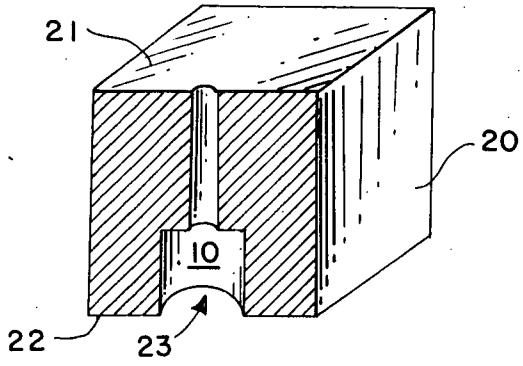

FIG. 1

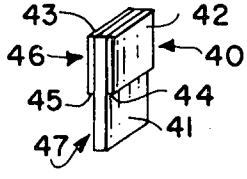

FIG. 2

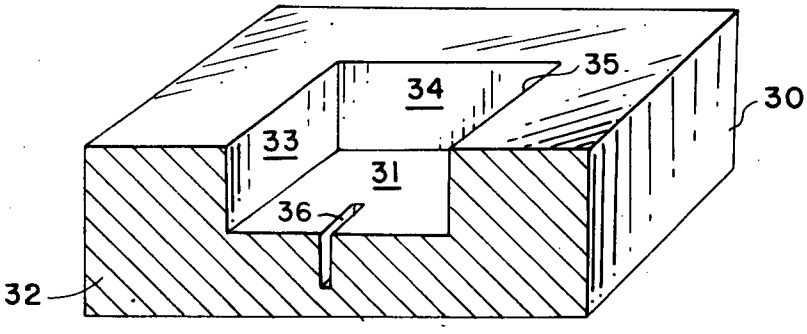

FIG. 3

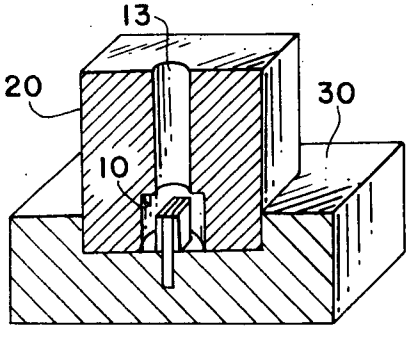

FIG. 4

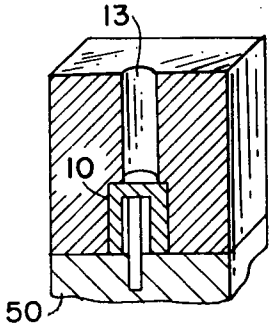

FIG. 5

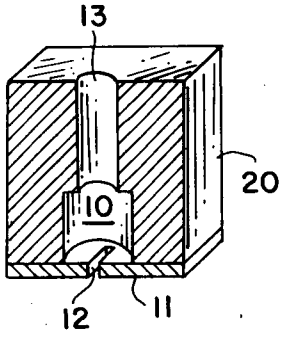

FIG. 6

METHOD OF FABRICATING AN OBJECT WITH A THIN WALL HAVING A PRECISELY SHAPED SLIT

The invention described herein was made in the performance of work under a NASA contract and is subject to the provisions of Section **305** of the National Aeronautics and Space Act of 1958, Public Law 85-568 (**72** STAT. 435; 42 U.S.C. 2457).

BACKGROUND OF THE INVENTION

This invention relates to a method of fabricating a structure having a cavity closed by a thin wall having a thin slit extending therethrough.

The difficulties in machining apertures, particularly slit apertures, in thin cavity walls having a thickness of from 0.0005 to 0.05 inches is well known. Such difficulties are increased where the cavity is of complex shape such as where access to a large cavity is through a narrow opening or channel.

One particular aspect of this problem is to provide a fluidic element for sensing the position of a gyroscope rotor. The element includes an enlarged cavity portion closed by a thin wall having a precisely shaped slit. The element also includes a small cavity portion opening at one end to an outer surface of the element and at its inner end to the larger cavity. It is thus difficult to gain access to the inner cavity with tools which would be otherwise useful in providing a slit in the thin wall of the enlarged cavity. In use, a surface of a gyroscope rotor partially covers the slit, and it is necessary that the slit is precisely shaped for effective operation. Conventional techniques for cutting the slit, such as machining with a slitting saw or photo etching, are not feasible for fabricating this element.

It is an object of the present invention to provide a method of forming an element having a cavity closed by a thin wall having a precision shaped slit therethrough. It is a further object to provide such object of metal. It is still a further object to provide such metal object where the thickness of the thin wall is from 0.0005 to 0.05 inches.

BRIEF SUMMARY

The foregoing and other objects which will be apparent to those of ordinary skill in the art are achieved according to the present invention by providing a method of forming an element having a cavity, the cavity having in at least one portion a thin wall with a precision shaped slit therethrough comprising the steps of providing a first member having a cavity therein, the cavity being open at a first surface and at a second surface, the opening at the second surface being the portion of the cavity which is to be provided with the thin wall with the precision shaped slit, providing a second member having a surface for receiving the second surface of the first member, the surface of the second member having a slot therein, the cross sectional area of the slot determining the cross sectional area of the slit to be provided in the thin wall of the cavity, the depth of the slot being greater than the desired thickness of the thin wall, inserting a shim member in the slot, the shim member filling the cross sectional area of the slot for a distance greater than the desired thickness of the thin wall and extending above the surface of the second member, positioning the first member on the second member such that the second surface of the first member is adjacent the surface of the second member, such that the portion of the shim extending above the surface of the second member extends into the cavity, and such that the slot is located relative to the cavity in the desired position of the precision shaped slit, filling the cavity with a molten, settable material composition having a melting point lower than that of the first member, the second member, and the shim member, permitting the molten settable composition to set to a solid, separating the first member from the second member, the shim member remaining with the first member due to its adhesion to the solid material set in the cavity, plating a metal layer on the second surface of the first member, the thickness of the plated layer overlying the cavity being greater than the desired thickness of the thin well, the plated metal having a higher melting point than that of the set material in the cavity, machining the plated layer such that the thickness thereof overlying the cavity is equal to the desired thickness of the thin wall, heating the first member to melt the set material, the shim member being held in place by adhesion to the plated layer, removing the melted material from the cavity, and removing the shim member from said cavity to provide the element, the thin wall being formed by the machined, plated, layer, and the precisely shaped slit being formed by the removal of the shim member from the machined, plated layer.

DETAILED DESCRIPTION

There follows a detailed description of a preferred embodiment of the invention, together with accompanying drawings. However, it is to be understood that the detailed description and accompanying drawngs are provided solely for the purpose of illustrating a preferred embodiment and that the invention is capable of numerous modifications and variations apparent to those skilled in the art without departing from the spirit and scope of the invention.

FIG. **1** is a diagrammatic sectional perspective view of a member including a cavity to be closed with a thin wall having a slit therethrough;

FIG. **2** is a diagrammatic perspective view of a shim member used in the method of the present invention;

FIG. **3** is a diagrammatic perspective sectional view of a fixture member used in the method of the present invention;

FIG. **4** is a diagrammatic perspective sectional view of the elements of FIGS. **1**, **2** and **3** assembled together;

FIG. **5** is a diagrammatic perspective sectional view of the element of FIG. **1** after being separated from the element of FIG. **3** and provided with a metal plated layer; and

FIG. **6** is a diagrammatic perspective sectional view of an element having a cavity closed with a thin wall having a slit therethrough according to the present invention.

FIG. **6** shows the final element produced by the present invention. The element includes a cavity **10** having a thin wall **11** (in this case 0.001 inches) having a precision shaped slit **12** (in this case 0.002 inches wide). The element is made by a process illustrated in FIGS. **1–5** as described below.

A first metal member **20** (FIG. **1**) is provided having a cavity **10** open at a first surface **21** of element **20** and open at a second surface **22** of element **20**, the opening **23** at surface **22** being the portion of cavity **10** which

is to be provided with thin wall **11** having slit **12**. A second member **30** is provided having a surface **31** for receiving surface **22** of member **20**. Surface **31** has a slot **36** having a cross sectional area the same as that desired for slit **12** and having a depth greater than the thickness of wall **11**.

FIG. **2** shows a metal laminate shim **40** including a central sheet piece **41** having a cross sectional area the same as that desired for slit **12**, and two outer sheet pieces **42, 43**, each having a thickness of 0.001 inches and forming shoulders **44, 45** with central piece **41**. Central piece **41** extends beyond shoulders **44, 45** a distance greater than the thickness of wall **11** and not greater than the depth of slot **36**.

The lower portion of shim **40** is inserted into slot **36** as shown in FIG. **4** with shoulders **44, 45** abutting surface **31** of member **30**. Member **20** is then positioned on member **30** as shown in FIG. **4** such that surface **22** of member **20** is adjacent surface **31** of member **30** with the upper portion **46** of shim member **40** extending into cavity **10**, and with slot **36** is located relative to cavity **10** in the desired position of slit **12**. Member **30** is conveniently provided with means, such as walls **33, 34** and **35** to hold member **20** in this position for the next step of the process.

Cavity **10** is then filled, through opening **13**, with a molten settable metal material having a relatively low melting point. Surface **31** of member **30** can be provided with a suitable release coating in the event that the set metal material tends to adhere thereto. After the material in cavity **10** has set solid, member **30** is removed and the lower (in the sense of FIG. **4**) surface of element **30** is electro plated with a layer **50** of nickel or other suitable metal thicker than the desired thickness of wall **11** as shown in FIG. **5**.

The plated layer is then machined such that the thickness of wall **11** in the area closing cavity **10** is the desired thickness, in this case 0.001 inch. Since the extended portion **47** of shim **40** extends further than 0.001 inch, the machining operation will cut through extended portion **47**.

The object is now heated to melt out the set metal composition and it will be apparent that the plated metal layer **50**, metal shim **40**, and metal element **20** all have a higher melting point than that of the set metal composition.

Shim **40** is removed by selective chemical etching, the material of shim **40** being different from that of element **20** and layer **50** and selectively attacked by the etchant.

The invention has particular application to structures in which wall **11** is not thicker than 0.05 inches and in which slit **12** is not wider than 0.05 inches. In general, wall **11** will be from 0.0005 to 0.05 inches in thickness and slot **12** will be from 0.0005 to 0.05 inches in width.

While wall **11** has been shown flat and uniform in cross section, it will be understood that it can take any desired shape. For example, the bottom area of shim **40** may be concave and when plated metal layer **50** is machined, it may be machined concave to provide a concave wall of uniform or varied cross section as desired. Alternatively, the outer surface of layer **50** could be machined flat or convex. It will thus be understood that the cross section of wall **11** in the finished article may have virtually any desired cross section. Furthermore, of course, a plurality of slits of desired shape can be formed in any wall.

What is claimed is:

1. A method of forming an element having a cavity, said cavity having in at least one portion a thin wall with a precision shaped slit therethrough comprising the steps of:

providing a first member having a cavity therein, said cavity being open at a first surface and at a second surface, the opening at said second surface being the portion of the cavity which is to be provided with said thin wall with said precision shaped slit;

providing a second member having a surface for receiving said second surface of said first member, said surface of said second member having a slot therein, the cross sectional area of said slot determining the cross sectional area of the slit to be provided in said thin wall of said cavity and the depth of said slot being greater than the desired thickness of said thin wall;

inserting a shim member in said slot, said shim member filling the cross sectional area of said slot for a distance greater than the desired thickness of said thin wall and extending above said surface of said second member;

positioning said first member on said second member such that said second surface of said first member is adjacent said surface of said second member, such that the portion of said shim extending above said surface of said second member extends into said cavity, and such that the slot is located relative to said cavity in the desired position of said precision shaped slit;

filling said cavity with a molten, settable material composition having a melting point lower than that of said first member, said second member, and said shim member;

permitting the molten settable composition to set to a solid;

separating said first member from said second member, said shim member remaining with said first member due to its adhesion to the solid material set in said cavity;

plating a metal layer on said second surface of said first member, the thickness of said plated layer overlying said cavity being greater than the desired thickness of said thin wall, said plated metal having a higher melting point than that of said set material in said cavity;

machining the plated layer such that the thickness thereof overlying said cavity is equal to the desired thickness of said thin wall;

heating said first member to melt said set material, said shim member being held in place by adhesion to said plated layer;

removing the melted material from said cavity; and

removing said shim member from said cavity to provide said element, said thin wall being formed by the machined, plated layer, and said precisely shaped slit being formed by the removal of said shim member from said machined, plated, layer.

2. A method according to claim **1** wherein said shim member is fabricated of a metal different from said plated metal and from said first member, and wherein

said shim is removed by etching with an etchant to which said plated metal layer is inert.

3. A method according to claim 1 wherein said first and second members are each metal.

4. A method according to claim 3 wherein said shim member is metal.

5. A method according to claim 4 wherein said settable composition is metal.

6. A method according to claim 1 wherein said cavity comprises a first, narrow, portion and a second, enlarged portion, said enlarged portion having an opening at said second surface of said first member provided with said thin wall having a precision shaped slit, said narrow portion extending from said enlarged portion

and having an opening at said first surface of said first member.

7. A method according to claim 1 wherein said second member includes means for holding said first member in position thereon.

8. A method according to claim 1 wherein said shim member includes a shoulder abutting the surface of said second member when inserted in said slot.

9. A method according to claim 1 wherein the structure is metal and wherein said thin wall has a thickness of from 0.0005 inches to 0.05 inches.

10. A method according to claim 9 wherein the slit width in said thin wall is from 0.0005 to 0.05 inches.

* * * * *