Langley

NATIONAL AERONAUTICS AND SPACE ADMINISTRATION
WASHINGTON, D.C. 20546

DEC 12 1974

REPLY TO ATTN OF: GP

(NASA-Case-LAR-11074-1) AUTOMATIC INOCULATING APPARATUS Patent (NASA) 10 p CSCL 06B
N75-13502
Unclas
00/51 03984

TO: KSI/Scientific & Technical Information Division
Attn: Miss Winnie M. Morgan

FROM: GP/Office of Assistant General Counsel for Patent Matters

SUBJECT: Announcement of NASA-Owned U.S. Patents in STAR

In accordance with the procedures agreed upon by Code GP and Code KSI, the attached NASA-owned U.S. Patent is being forwarded for abstracting and announcement in NASA STAR.

The following information is provided:

U.S. Patent No. : 3,850,754

Government or Corporate Employee : U.S. Government

Supplementary Corporate Source (if applicable) : ~

NASA Patent Case No. : LAR-11,074-1

NOTE - If this patent covers an invention made by a corporate employee of a NASA Contractor, the following is applicable:

YES ☐ NO ☒

Pursuant to Section 305(a) of the National Aeronautics and Space Act, the name of the Administrator of NASA appears on the first page of the patent; however, the name of the actual inventor (author) appears at the heading of column No. 1 of the Specification, following the words "...with respect to an invention of ..."

Bonnie L. Woerner

Bonnie L. Woerner
Enclosure

DEC 1974
RECEIVED
NASA STI FACILITY
INPUT BRANCH

LAR-11,074-1

United States Patent [19]

Wilkins et al.

[11] **3,850,754**

[45] **Nov. 26, 1974**

[54] **AUTOMATIC INOCULATING APPARATUS**

[75] Inventors: **Judd R. Wilkins; Stacey M. Mills,** both of Hampton, Va.

[73] Assignee: **The United States of America as represented by the Administrator of the National Aeronautics and Space Administration,** Washington, D.C.

[22] Filed: **Jan. 24, 1973**

[21] Appl. No.: **326,364**

[52] **U.S. Cl.** **195/127,** 195/120, 115/103.5

[51] **Int. Cl.** **C12b 1/02**

[58] **Field of Search** 195/120, 127

[56] **References Cited**

UNITED STATES PATENTS

3,778,351 12/1973 Rosov 195/127

Primary Examiner—Alvin E. Tanenholtz

Attorney, Agent, or Firm—Wallace J. Nelson; Howard J. Osborn; John R. Manning

[57] **ABSTRACT**

An automatic inoculating apparatus for agar trays and the like uses a simple inoculating element such as a cotton swab or inoculating loop. The apparatus includes a movable carriage for supporting the tray to be inoculated, a drive motor for moving the tray along a trackway and a swabbing motor for automatically swabbing the tray during the movement thereof, the inoculating swab or loop being mounted in a crank arm driven by a swabbing motor. An actuator motor controls lowering of the inoculating element onto the tray and lifting of the inoculating element therefrom. An electrical control system including limit microswitches enables automatic control of the actuator motor and return of the carriage to the initial position thereof after inoculating is completed.

10 Claims, 9 Drawing Figures

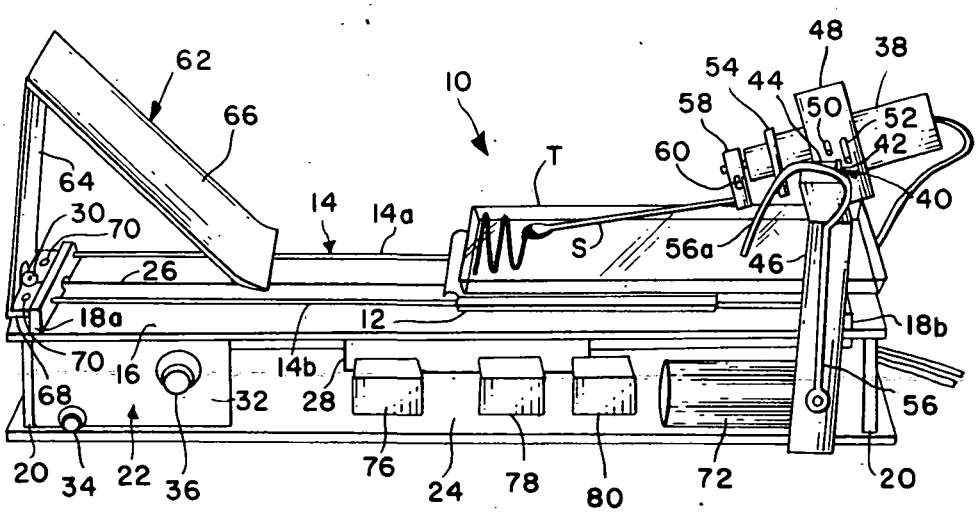

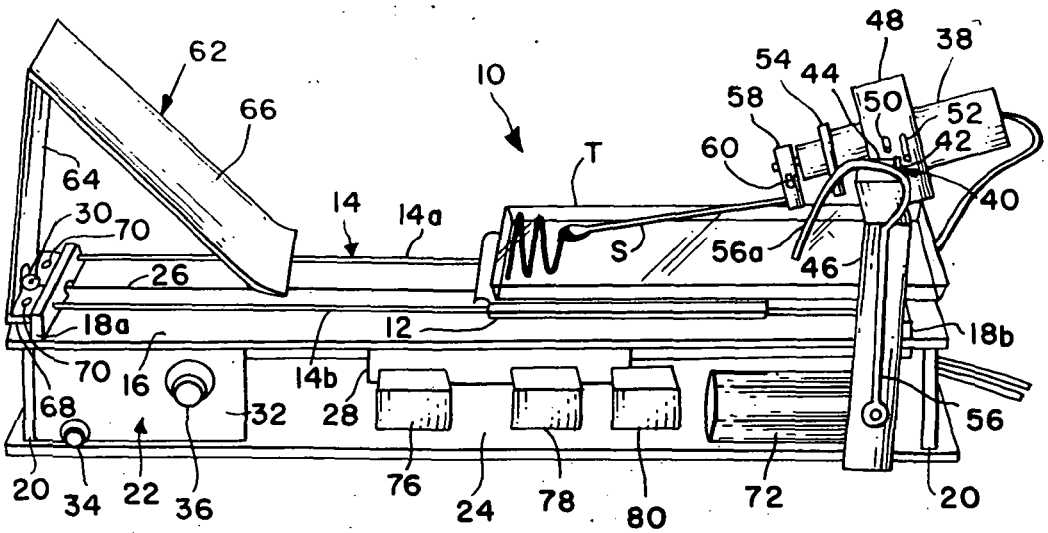
62
66
10
T
48
38
54
44
58
50
52
60
42
40
64
30
70
14
14a
S
56a
46
26
18a
12
18b
70
16
14b
68
32
28
56
20
34
22
36
76
24
78
80
72
20

FIG. 1a

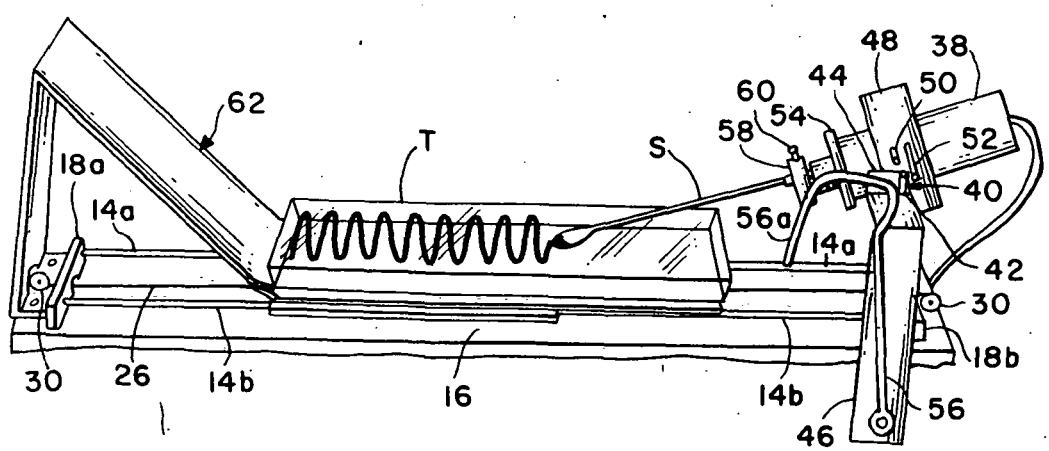
48
38
44
50
60
54
62
58
52
T
S
18a
40
14a
56a
14a
42
30
18b
30
26
14b
16
14b
56
46

FIG. 1b

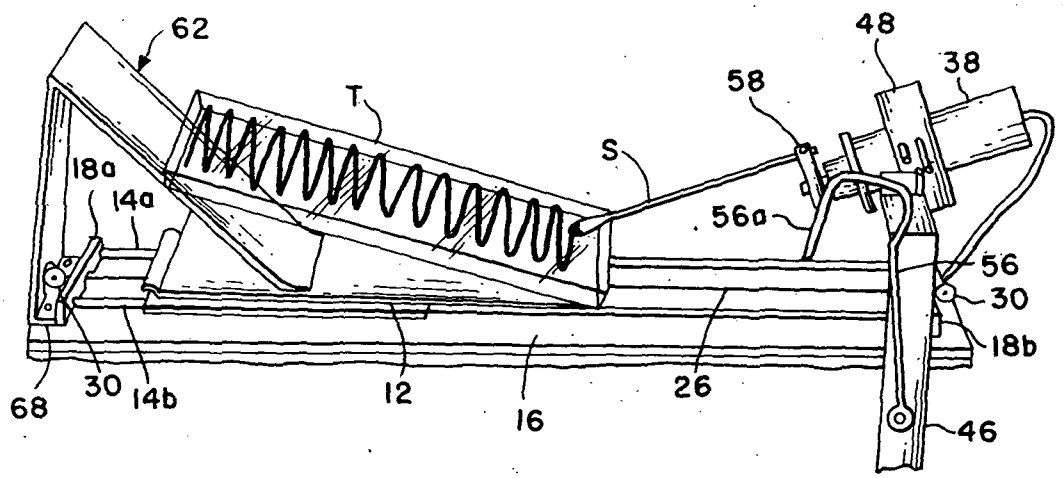
62
T
S
58
48
38
18a
14a
56a
56
30
18b
68
30
14b
12
16
26
46

FIG. 1c

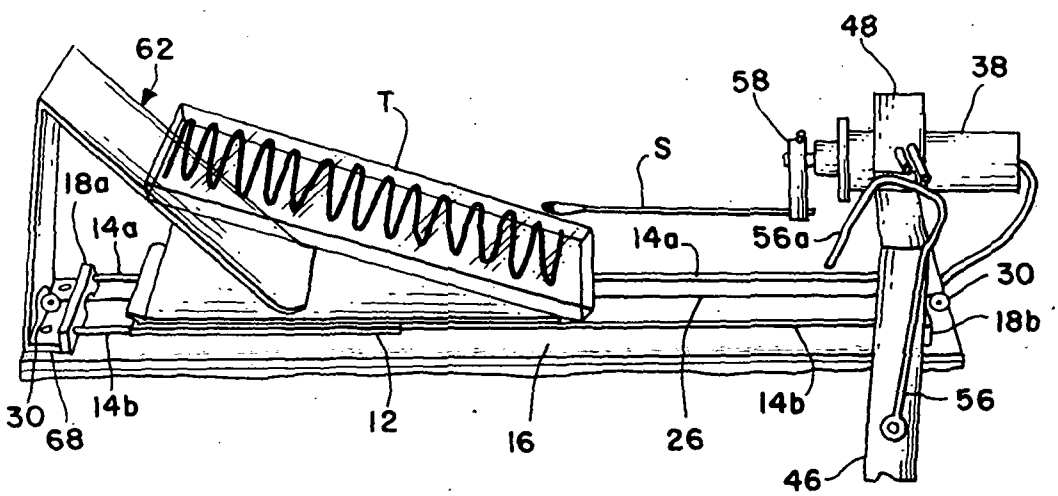
62
T
S
58
48
38
18a
14a
14a
56a
30
18b
30
68
14b
12
16
26
14b
56
46

FIG. 1d

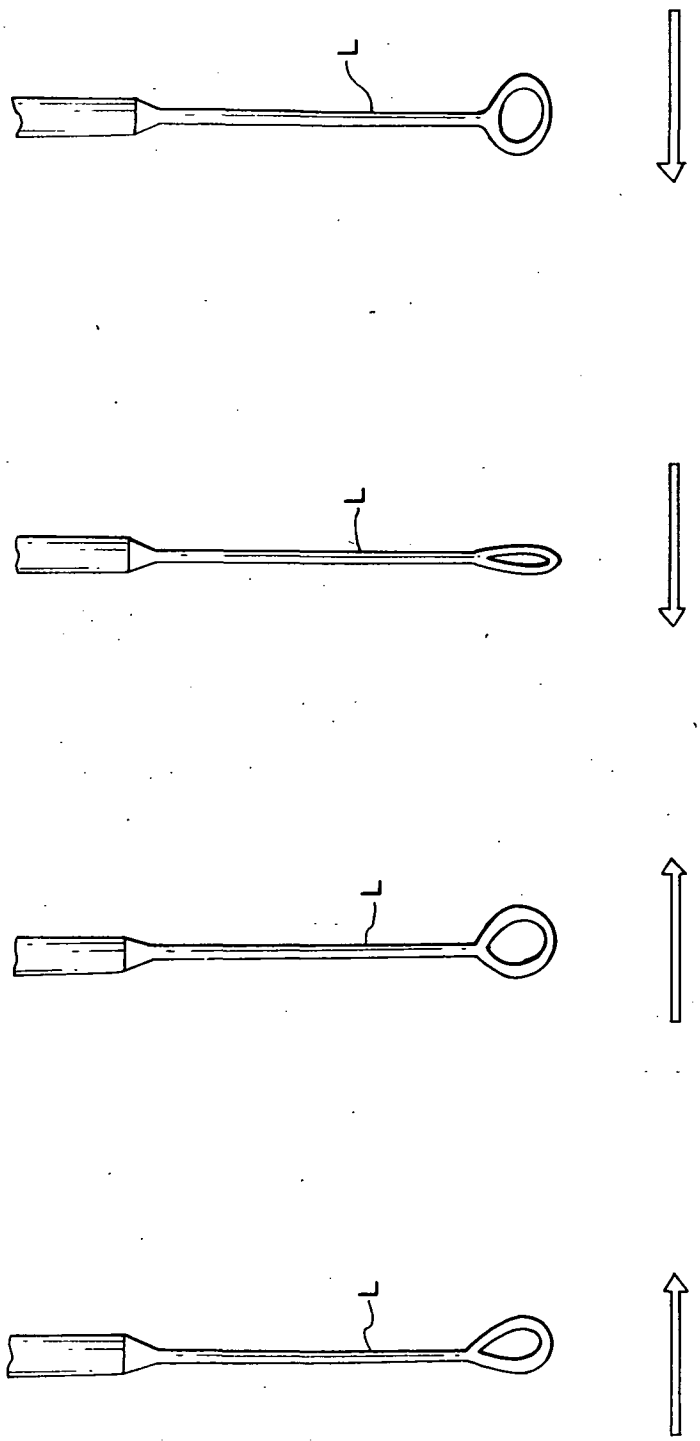

FIG. 2a

FIG. 2b

FIG. 2c

FIG. 2d

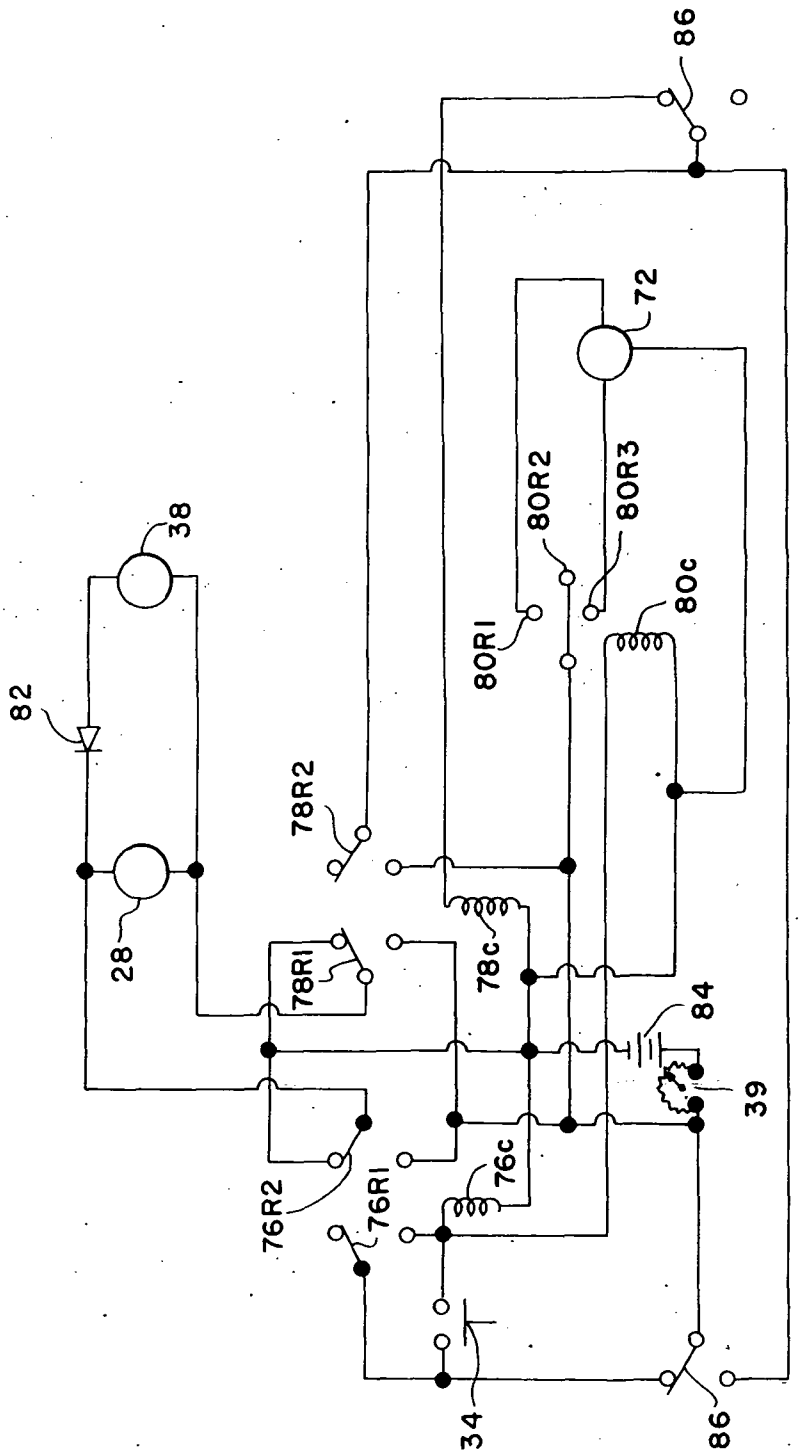
86
72
80R2
80R3
38
80c
80R1
82
78R2
28
78R1
78c
84
39
76R2
76R1
76c
34
86

FIG. 3

AUTOMATIC INOCULATING APPARATUS

ORIGIN OF THE INVENTION

The invention described herein was made by employees of the United States Government and may be manufactured and used by or for the Government for governmental purposes without the payment of any royalties thereon or therefor.

FIELD OF THE INVENTION

The present invention relates to a mechanical device for automatically and uniformly inoculating a surface using a cotton swab or the like.

BACKGROUND OF THE INVENTION

A sterile cotton swab is perhaps the most widely used method of collecting samples from a variety of clinical and environmental sources. Since the introduction of the swab, very few changes have been made either in the design thereof or the use thereof in sample collecting. Further, the processing of a collected sample in a microbiological laboratory generally involves the use of such swabs and is basically performed using one or the other of two methods, namely, (1) rubbing a swab along a small area of the agar surface in a Petri dish, a sterile inoculating loop being used to streak the original inoculum in order to obtain isolated colonies and (2) simply rubbing the swab over the entire agar surface. The latter of these is the less widely used and in either case, if additional selective or differential media are required, the process is repeated for each additional Petri dish.

Both of these methods suffer serious disadvantages. In particular, in both methods (1) the chances of contamination increase with each additional manipulation of the swab, (2) the inoculating procedures are entirely subjective, and there are wide differences between different operations, i.e., wide person-to-person differences, and (3) it is difficult to visualize the qualitative, and to some extent, the quantitative, relationships of mixed flora when separate Petri dishes are employed.

A further prior art device of interest is that described in the article "The automatic spreading of bacterial culture over a solid agar plate" by R. E. Trotman, J. Appl. Bacteriol. 34:615-616, 1971. This article describes an automatic device for spreading inoculum by moving a bacteriological loop along the radius of a rotating agar plate. Although this technique removes the operator from the manual task of streaking the plate, the technique suffers important disadvantages. For example, the inoculum must be added separately to the plate and additional plates have to be streaked if more than one medium is used. Further, and more generally, the device in question is relatively complex, with the attendant disadvantages of relatively high cost of manufacture and maintenance.

SUMMARY OF THE INVENTION

In accordance with the present invention, an inoculation apparatus is provided which utilizes a simple inoculation element, such as a conventional cotton swab or inoculating loop, to automatically and uniformly inoculate a culture container such as a plastic tray containing selective or differential media. The apparatus is simple in design and provides automatic, fool-proof operation. In this regard, the apparatus, being mechanical and

fully automated, eliminates operator error and the person-to-person differences in inoculation discussed above. The apparatus also provides the capability of using a variety of media in one tray to select out and/or differentiate between bacterial types and of performing simultaneous tests such as used in determining antibiotic sensitivity.

According to a preferred embodiment, the apparatus includes a swabbing device comprising a crank arm in which the swab is mounted, and a drive motor for imparting a predetermined motion to the swab. The motor is supported in a single gimbal ring mounted at one end of a trackway for the tray. A motor-driven carriage mounted on the trackway carries the tray and provides movement of the tray relative to the swabbing device. The longitudinal position of the swabbing motor in the gimbal ring can be adjusted as can the angle of the motor with respect to the tray, these adjustments enabling variation in the pressure and angle of attack of the swab or loop relative to the tray. An actuator arm driven by a further, actuator motor provides lifting and lowering of the drive motor and hence of the swab or loop relative to the tray. An incline located at the other end of the trackway provides a ramp for the tray at the end of its travel and enables completion of the inoculating operation without interference from the end of the tray.

The electrical control system for the apparatus includes a limit microswitch which, when actuated by the carriage at the end of its travel in a direction away from the swabbing motor, causes reversal of the direction of travel of the tray so that the tray is returned to the initial position thereof. At the same time, an actuator motor is energized to cause lifting of the swab or loop from the tray. A further limit microswitch located at the other end of the trackway de-energizes all motors when the carriage returns to the initial position.

Other features and advantages of the invention will be set forth in, or apparent from, the detailed description of a preferred embodiment found hereinbelow.

BRIEF DESCRIPTION OF THE DRAWINGS

FIGS. 1(*a*) to 1(*d*) are perspective views of the automatic inoculating apparatus of the invention showing the apparatus during various stages of an inoculating operation;

FIGS. 2(*a*) to 2(*d*) illustrate the movement of an inoculating loop driven by the apparatus of the invention, the arrows indicating the direction of movement of the loop; and

FIG. 3 is a schematic circuit diagram of the electrical system of the apparatus of FIGS. 1(*a*) to (*d*).

DESCRIPTION OF A PREFERRED EMBODIMENT

Referring to FIG. 1, an inoculating apparatus in accordance with a presently preferred embodiment of the invention is denoted **10** and includes a motor-driven carriage **12** which rides on doubled railed track **14**. The rails **14*a*** and **14*b*** of track **14** are mounted above an elongate plate **16** by brackets **18*a*** and **18*b*** located at the opposite ends of plate **16**. The plate **16** itself is supported by posts **20** located at the corners thereof and forms the top wall of a housing generally denoted **22**. Housing **22** also includes a bottom wall or base plate **24** and serves to house the electrical control system for the apparatus described below. Carriage **12** is connected

by a cable **26** to a drive motor **28** which can be a model 43A 106—1 motor manufactured by Globe Industries. Cable **26** forms a complete loop which extends around a pair of grooved discs or wheels **30** mounted for rotation at opposite ends of plate **16**, only the upper portion of cable **26** extending between tracks **14***a* and **14***b* parallel thereto, being illustrated in FIGS. **1**(*a*) to **1**(*d*). With this arrangement, rotation of looped cable **26** results in longitudinal displacement of carriage **12** along rails **14***a* and **14***b* of track **14**. Housing **22** also includes a side plate **32** which mounts a start switch **34** and carriage speed control knob **36** the functions of which are described hereinbelow. Speed control knob **36** controls the setting of a rheostat **39** shown in FIG. **3**.

A swabbing motor **38** is mounted at one end of track **14** in a single gimbal **40**. In an exemplary embodiment, motor **38** is a model 6907 motor, manufactured by Globe Industries. Gimbal **40** is formed by pivot pins **42** (only one of which is shown) which extend through upturned portions **44** a pair of upright support posts or brackets **46** (one of which can be seen in FIGS. **1**(*a*) to **1**(*d*) located on opposite sides of track **14** and including inwardly extending support arms which terminate in gimbal mount **40**. Pivot pins **42** engage a mounting collar or yoke **48** attached to motor **38** which includes outwardly extending rods **50** on both sides and **52** on the front side only. Motor **38** also includes a contoured annulus or ring **54** which cooperates with an actuator arm **56** to control raising and lowering of the motor **38** as described hereinbelow. Support brackets **46** are rigidly affixed to housing **22** by suitable means (not shown) to form a unitary structure. A swabbing crank arm **58** is detachably secured to the armature of motor **38** by suitable means such as set screw **60**. Crank **58** includes an aperture (not shown) which provides a friction fit for a swab S received therein.

An incline **62** is located at the other end of plate **16** and is formed by a sheet of material such as metal which is bent generally in the shape of an inverted "V" as illustrated, and includes a generally vertical, support portion **64** and an angled or slanting portion **66** which forms a 45° incline with respect to plate **16**. Tabs **68**, bent out of the more or less vertical support portion **64**, are secured to plate **16** by suitable means such as screws **70**. A slot is provided in support portion **64** to accommodate cable **26** and associated wheel **30** whereas the free end of incline portion **66** is spaced from plate **16** so that cable **26** and rails **14***a* and **14***b* lie therebeneath.

Actuator arm **56** is pivotably mounted at one end to bracket **46** and includes a generally U-shaped hook portion **56***a* at the free end thereof. The pivoting movement of actuator arm **56**, and hence lifting and lowering of swab S, is controlled by an actuator motor **72** mounted within housing **22**. Actuator motor **72** can be a modified Barber Coleman, part DYLM 43301-20. The housing **24** also houses a series of three relays **76**, **78** and **80** which can be 14.0 volt d.c. relays manufactured by Allied Control Co.

Referring to FIG. **3**, a schematic circuit diagram of the electrical system of the apparatus of FIGS. **1**(*a*) to **1**(*d*) is shown. As shown, carriage drive motor **28** and swabbing motor **38** are connected in parallel, a diode **82** being connected between motors **28** and **38** as shown. The circuit also includes the relay coils **76C**, **78C** and **80C** of relays **76**, **78** and **80** mentioned above. Start switch **34**, which, as indicated, is a push button switch, controls connection of coils **76C**, **78C** and **80C** to a suitable power source such as battery **84**. In a specific embodiment, electrical power for the system is provided at 15 volts and 2 amps by a model HH32-15 d.c. power supply manufactured by Trygon Electronics. Relay coil **76C** controls opening and closing of two sets of contacts **76R1** and **76R2** whereas relay coil **78C** similarly controls contacts **78R1** and **78R2**. Relay **80C** controls switching between three switching contacts **80R1**, **80R2** and **80R3**. Contacts **80R1** and **80R3**, when closed, enable energization of actuator motor **72** although the current flow through motor **72** is reversed in one instance as compared with the other. Contact **80R2** is open, as illustrated. A pair of limit switches **86** and **88**, which are not shown in FIGS. **1**(*a*) to **1**(*d*) but comprise microswitches located at opposite ends of track **14** so as to be contacted by carriage **12** at the end of the travel thereof, respectively limit the leftward and rightward movement of carriage **12** as viewed in FIG. **1**.

In operation, a cotton swab S to be processed is attached to swabbing crank **58** and a plastic tray T containing the appropriate media is placed on carriage **12** and the lid removed. Push-button start switch **34** is then depressed and power thus supplied to swabbing motor **38**, carriage drive motor **28** and actuator motor **72**. Referring to FIG. **3**, with switch **34** closed the circuit for relay coil **76** is completed so that relay coil **76C** is energized and normally open contacts **76R1** and **76R2** are closed thereby activating motors **28** and **38**. In addition, relay coil **80C** is energized, closing contacts **80R1** and energizing actuator motor **72**. Contacts **76R1**, when closed, provide a short circuit shunt around start switch **34** to keep relay coils **76C** and **80C** energized.

The next sequence of events is illustrated in FIG. **1**(*b*). Actuator motor **72** causes arm **56** to pivot forwardly thereby lowering swabbing motor **38** and hence swab S, so that the latter contacts the agar surface of tray T. At the same time carriage **12** and thus tray T, begins movement along tracks **14** responsive to energization of motor **38**, swab S remaining in contact with tray T throughout the longitudinal movement of the latter. The tray T then proceeds up the inclined portion **66** of incline **62** as shown in FIG. **1**(*c*) so that the trailing edge of the tray T does not interfere with the swabbing action. When tray T is completely innoculated by swab S, "left" microswitch **86** is actuated by carriage **12** which has continued to move to the left as viewed in FIG. **1**(*c*) as tray T moves up incline **62**. Referring to FIG. **3**, actuation of limit switch **86** causes de-energization of relay coil **76C** and energization of relay coil **78C** so that relay contacts **78R1** and **78R2** are closed and the direction of current flow through drive motor **28** reversed. Thus, the direction of travel of carriage **12**, and hence tray T, is reversed. At the same time, the current through relay coil **80C** is also reversed and actuator motor **72** energized through contact **80R3**. This reverses the direction of movement of an actuator arm **56** and causes actuator arm **56** to lift up motor **38** to the more or less horizontal position shown in FIG. **1**(*d*) so that swab S is removed from contact with the swabbing surface. Carriage **12** continues to move to the right until "right" microswitch **88** is engaged thereby and actuated. As is evident from FIG. **3**, actuation of limit switch **88** will cause de-energization of relay coils **78C** and **80C** and hence of drive motor

28 and actuator motor 72. This completes the cycle. It is noted that all operations are conducted inside a clear plastic box (not shown) which is equipped with ultraviolet lamps. The atmosphere and temperature within the box can also be controlled for some operations if desired.

The swabbing motor 38 and associated crank arm 58 produce the side-to-side or back and forth swabbing pattern, using India Ink illustrations, shown in FIGS. 1(*c*) and 1(*d*). In addition, the swab itself also follows a spiralling pattern. As discussed above, an inoculating loop can be used rather than a swab. FIGS. 2(*a*) to 2(*d*) illustrate the spiralling pattern referred to above for an inoculating loop L used in streaking an agar surface, the arrows showing the direction of travel of the loop L. In FIG. 2(*a*), the position of loop L when initial contact is made with the agar surface is shown. FIG. 2(*b*) shows the flat side of the loop L in contact with the agar so that there is subsequent release of cells from the ruptured film. In FIG. 2(*c*), the loop L is shown at the completion of the streak motion across the width of the tray. Finally 2(*d*) shows loop L during the return motion thereof illustrating the spiral action resulting in contact of the loop edge with the agar surface. It should be noted that the inoculation patterns for a loop and a cotton swab are distinctly different. With a swab, a brush-type effect is produced which results from the swab maintaining almost continuous contact with the agar surface during the side to side streaking action. It is only during the spiraling action along the longitudinal axis that the swab tip touches the agar. This results in a uniform distribution of cells from one end of the tray to the other. With the inoculating loop the major portion of the inoculum is deposited on the agar surface during the initial streaking with a gradual release of cells as streaking continues along the length of the tray. When only the leading edge of the tip of the loop remains in contact with the agar, single cells or small clumps can be released which results in isolated colonies. The production of such "clumps" can be influenced by controlling the rate of tray travel. The pressure exerted by cotton swab or inoculating loop and the angle of the swab or loop relative to the agar surface of the tray can be adjusted by adjusting the relative position of motor 38.

Considering a specific example, plastic trays, 3¼ inches wide and 9⅝ inches long were utilized, and rheostat 39 (FIG. 3) adjusted to provide speed ranges from 6.6 inches/min. to 8.4 inches/min., with a total length of carriage travel of 9 inches. With the speed control rheostat 39 set at the midpoint the tray travels at a speed of 7.5 inches/min. with 2.5 swab strokes per inch.

The apparatus described above can be used to successfully inoculate various combinations of selective and differential media with a variety of bacteria, environmental samples, and clinical specimens. One attractive feature of the invention is the capability of incorporating various combinations of differential and relative media in one tray. For example, Blood Agar (BA) in one section of the tray permitted growth of a mixture of *Staphylococcus aureus* and *Escherichia coli* while Phenylethyl Alchol Agar (PEA) in another section suppressed *E. coli* while allowing *S. aureus* to grow and MacConkey's Agar (MAC) in a third section allowed only the *E. coli* to develop. As mentioned above, another attractive feature of the invention is that the operator is permitted to quickly visualize the overall relationship of the various bacterial types in the sample inoculated. In addition, determination of a semi-quantitative relationship of the various bacterial types is also possible. For example, with the cultures tested, and using a cotton swab, discrete separate colonies developed only when the sample contained $\leq 10^4$ cells/ml. while at higher concentrations confluent growth was observed.

Although the invention has been described with reference to an exemplary embodiment thereof, it will be understood that variations and modifications can be effected in this embodiment without departing from the scope and spirit of the invention.

We claim:

1. An automatic inoculating apparatus for inoculating agar trays and the like with an inoculating element selected from the group consisting of a cotton swab and inoculating loop, said apparatus comprising

a movable carriage for supporting the container for the culture to be inoculated,

swabbing means for automatically swabbing the container to be inoculated, said swabbing means including as an inoculating element a cotton swab or an inoculating loop, a support arm for supporting the inoculating element and swabbing motor means for imparting a predetermined motion to said support arm,

actuator means for controlling the positioning of said swabbing means relative to said carriage such that said support arm is moved between a first, operative position wherein the inoculating element carried thereby contacts the container and a second inoperative position wherein the inoculating element is out of contact with the container, and

drive means for causing longitudinal movement of said carriage relative to said swabbing means to provide inoculation of the container carried by said carriage along the length thereof.

2. An apparatus as claimed in claim 1 wherein said swabbing motor means includes a swabbing motor and means for pivotably mounting said swabbing motor said actuator means including an actuator motor and an actuating arm driven by said motor for controlling pivoting of said swabbing motor so as to cause movement of the inoculating element carried by said support arm into and out of engagement with a container carried by said carriage.

3. An apparatus as claimed in claim 2 wherein said support arm comprises an elongate crank arm rotatably affixed at one end to the armature of said swabbing motor and including an aperture in the other end for receiving an inoculating element.

4. An apparatus as claimed in claim 2 further comprising a trackway on which said carriage rides.

5. An apparatus as claimed in claim 4 wherein said drive means includes a drive motor, and said apparatus further comprises an electrical control system for controlling energization of said drive motor, said actuator motor and said swabbing motor.

6. An apparatus as claimed in claim 5 wherein said electrical control system comprises a start switch for, when closed, initially energizing said motors and a microswitch located along said trackway and actuated responsive to the travel of said carriage a predetermined distance along said trackway, for, when actuated, causing reversal of the direction of current through said

drive motor so that the direction of travel of said carriage is reversed.

7. An apparatus as claimed in claim 6 further comprising a further microswitch located at the other end of said trackway for de-energizing said motors when said carriage returns to the initial position thereof.

8. An apparatus as claimed in claim 6 wherein said electrical control system includes means responsive to the actuation of said limit microswitch for causing said actuator motor to raise said swabbing motor to a position wherein the inoculating element is removed from contact with the container.

9. An apparatus as claimed in claim 4 further comprising an incline located at an end of said trackway remote from said swabbing means upon which said container rides during the travel of said carriage so that swabbing of the surface of the container can be completed without interference from the container.

10. An apparatus as claimed in claim 5 further comprising a housing located beneath said trackway for housing said motors and said electrical control system, said mounting means for mounting said swabbing motor comprising first and second support posts located on opposite sides of said trackway and secured to said housing.

* * * * *