NASA CASE [redacted]. LAR-11,398-1

PRINT FIG. The Figure

NOTICE

The invention disclosed in this document resulted from research in aeronautical and space activities performed under programs of the National Aeronautics and Space Administration. The invention is owned by NASA and is, therefore, available for licensing in accordance with the NASA Patent Licensing Regulation (14 Code of Federal Regulations 1245.2).

To encourage commercial utilization of NASA-owned inventions, it is NASA policy to grant licenses to commercial concerns. Although NASA encourages nonexclusive licensing to promote competition and achieve the widest possible utilization, NASA will consider the granting of a limited exclusive license, pursuant to the NASA Patent Licensing Regulations, when such a license will provide the necessary incentive to the licensee to achieve early practical application of the invention.

Address inquiries and all applications for license for this invention to NASA Patent Counsel, Langley Research Center, Mail Code 456, Langley Station, Hampton, Virginia, 23365. Approved NASA forms for application for nonexclusive or exclusive license are available from the above address.

LAR

NASA Case [redacted]. LAR 11398-1

AWARDS ABSTRACT
PRELOADED TORQUE LIMITING SHAFT COUPLING

This invention relates to an apparatus for coupling rotating shafts so that direct coupling will exist up to a predetermined torque level but that one shaft will lag the other after the predetermined level of torque is surpassed.

FIG. 1 shows the coupling device which consists of a split ring spring 22 which fits into a circular groove 18 on both the driven member 10 and the driving member 14. Tang 28, formed by the absence of the groove, matches split 26 and is slightly larger than the split 26. The compression of spring 22 in order to fit it into the grooves provides the preload level of torque. When the preload level of torque is surpassed, spring 22 is subject to further compression as direct coupling is lost between driven member 10 and driving member 14.

The novelty of the invention is in the simplicity and compactness of the coupling despite its dual function of coupling and torque limitation. Furthermore, due to its geometric symmetry it operates in a bidirectional manner functioning for either acceleration or deceleration.

Inventor: Wayne A. Harmening, SS No. [redacted]
Employer: RCA, NAS1-9000 (Irrevocable)
~~Initial Evaluator: Fred P. Staggs~~

Serial No.: 541,822
Filing Date: January 17, 1975

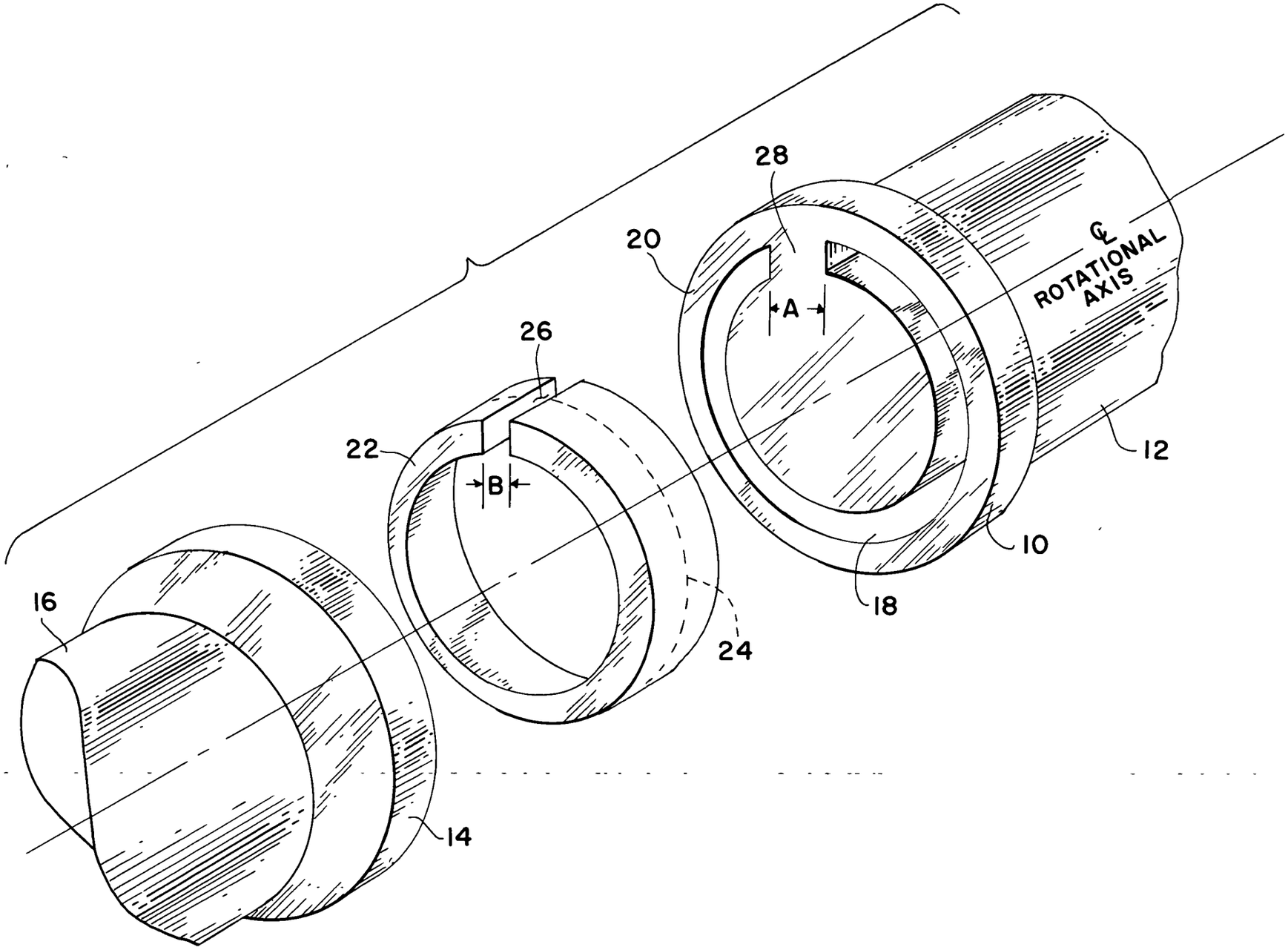

NASA CASE LAR-11398-1
ONE SHEET ONLY
INVENTOR WAYNE A HARMENING

LAR-14398-1

ABSTRACT OF THE DISCLOSURE

A torque limiting spring for a rotating shaft system which acts bidirectionally and is preloaded. The spring is a split circular ring compressed into cavities on facing surfaces of matching shafts. The spring is preloaded by varying the width of a tang in the shaft cavity relative to the split in the spring.

ORIGIN OF THE INVENTION

The invention described herein was made in the performance of work under a NASA contract and is subject to the provisions of Section 305 of the National Aeronautics and Space Act of 1958, Public Law 85-568 (72 Stat. 435; 42 USC 2457).

BACKGROUND OF THE INVENTION

This invention relates generally to shaft coupling devices and specifically to a torque limiting spring for use as a shaft coupler.

Torque limiting devices are a common requirement in many shaft driven systems. They may be found in antenna rotating mechanisms and impact driven hand tools and are frequently desirable in such common items as lawn mowers. While many of these applications need only unidirectional torque limits, some, particularly any system with high inertia loads, require bidirectional limitation. A unidirectional torque limiting device essentially serves as a shock isolating member to protect the driving portion of a shaft from a shock-induced when the driver portion meets a sudden load. One example of such a load would be the typical rotary lawn mower blade hitting a rock. Some portion of the system must yield to such a shock even if it is only the engine shaft twisting. A bidirectional torque limiting system will limit the torque in the system regardless of whether the

transfer of torque required is from the driving protion or from the driven portion. Such a bidirectional requirement arises when a high inertia load such as an antenna stops quickly. In such a circumstance the portion of the shaft after the braking device is subjected to a torque opposite to that which occurs when the antenna is started into rotation. While the prior art has contained bidirectional torque limiters, no simple inexpensive device has been available which permits installation in confined shaft lengths.

SUMMARY OF THE INVENTION

This invention consists of a driving member, a driven member, and a split circular ring which acts as a coupler between them. Both the driving member and the driven member have retaining cavities which are incomplete circular grooves. The incomplete portion of these circular grooves forms a tang or key to engage the split of the split circular ring. The width of this tang is designed to be greater than the free state width of the split in the split ring so that in order to fit the split ring into the retaining cavity the split ring must be compressed circumferentially. This compression causes a preload torque to be developed in the system. Until the preload torque is surpassed the system is directly coupled between the driving and the driven members. However, if the torque between the members becomes greater than the preload torque developed by the compressed ring the driven member lags behind the driving member due to further compression of the ring. This further compression absorbs the shock of the greater torque until the driven member attains the same rotation as the driving member, at which time the torque is reduced to preload levels or less and direct coupling is reestablished. The symmetrical construction of the components of the

NASA FORM 1027 NOV 63

GPO 926-228

system permit the torque limiting action to occur in both the direction of rotation and in the direction opposite of rotation so that torque limiting is available for both acceleration and deceleration.

BRIEF DESCRIPTION OF THE DRAWING

The drawing is a perspective view of the components of the invention separated along the axis of rotation of the system.

DESCRIPTION OF THE PREFERRED EMBODIMENT

The preferred embodiment of the invention is shown in the drawing. Driven member 10 is attached to shaft 12 by conventional means. Driving member 14 is likewise attached to driving shaft 16 by conventional means. Both the driving member and the driven member have incomplete circular grooves machined within their matching faces. This groove, forming a retaining cavity 18, is seen on face 20 only upon driven member 10 in the drawing. But an exact replica exists upon driving member 14 although it is not seen in the drawing in the perspective shown. Spring 22 forms a coupling between driving member 14 and driven member 10. Spring 22 is formed as a split ring which fits into cavity 18 and the matching cavity in the driving member. When completely assembled spring 22 is inserted into cavity 18 and its matching cavity so that face 20 and the matching face on the driving member almost meet at midpoint 24 of spring 22. Spring 22 fits into cavity 18 with split 26 mating tang 28 formed by the incomplete groove of cavity 18. The cavity on driving member 14 has a similar tang of exact size. Tang 28 is dimensioned so that its width A is greater than the free state width B of split 26. Therefore, in order to fit spring 22 into the cavities spring 22 must be compressed to clear the tangs. This circumferential compression upon assembly causes a preload torque to be developed

NASA FORM 1027 NOV 63

GPO 926-228

between driving member 14 and driven member 10. A frictional connection between the members also results.

Since all the components are symmetrical this torque is bidirectional and it is immaterial whether the driving member is accelerated or decelerated to overcome this preload. As long as the transmitted torque is below the level of the preload torque the driving member is effectively directly coupled to the driven member. However, if for any reason, such as a sudden loading of the driven shaft, the torque required of the system surpasses the preload torque, a further compression of the spring occurs. This further compression absorbs the shock of increased torque and permits the driven member to temporarily lag behind the driving member. When the driven member attains the same speed of rotation as the driving member the torque once more falls below the level of the preload torque and direct coupling once more exists.

While the preferred embodiment suggests the spring as being constrained by the outside diameter of the cavity, this design is not a requirement for the proper functioning of the invention. The use of a design which provides such constraint, however, permits accurate control of the maximum expanded spring diameter which in turn controls the spring stress.

It is to be understood that the forms of the invention herein shown are merely preferred embodiments. Various changes may be made to the shape, size or arrangement of parts; equivalent means may be substituted for those illustrated and described and certain features may be used independently from other features without departing from the spirit and scope of the invention. For example, driving member 14 and driven member 10 may be made integral with their respective shafts or the retaining cavities may

NASA FORM 1027 NOV 63

GPO 926-228

be machined into the shaft ends providing that the shaft diameters are large enough.

What is claimed as new and desired to be secured by Letters Patent of the United States:

This is the end of the patent specification. There are no claims attached.

NASA FORM 1027 NOV 63

GPO 9.26 228