Marshall

NATIONAL AERONAUTICS AND SPACE ADMINISTRATION
WASHINGTON, D.C. 20546

MAY 12 1975

REPLY TO ATTN OF: GP

TO: KSI/Scientific & Technical Information Division
Attn: Miss Winnie M. Morgan

FROM: GP/Office of Assistant General Counsel for Patent Matters

SUBJECT: Announcement of NASA-Owned U.S. Patents in STAR

(NASA-Case-MFS-22649-1) HOLE CUTTER Patent (NASA) 5 p CSCL 13I
N75-25186
Unclas
00/37 20532

In accordance with the procedures agreed upon by Code GP and Code KSI, the attached NASA-owned U.S. Patent is being forwarded for abstracting and announcement in NASA STAR.

The following information is provided:

U.S. Patent No. : 3,877,833

Government or Corporate Employee : U.S. Government

Supplementary Corporate Source (if applicable) : ~

NASA Patent Case No. : MFS-22,649-1

NOTE - If this patent covers an invention made by a corporate employee of a NASA Contractor, the following is applicable:

YES ☐ NO ☒

Pursuant to Section 305(a) of the National Aeronautics and Space Act, the name of the Administrator of NASA appears on the first page of the patent; however, the name of the actual inventor (author) appears at the heading of column No. 1 of the Specification, following the words "...with respect to an invention of ..."

Bonnie L. Woerner

Bonnie L. Woerner
Enclosure

RECEIVED
NASA STI FACILITY
INPUT BRANCH
MAY 1975

MES-22,649-1

United States Patent [19]

Thornton et al.

[11] **3,877,833**

[45] **Apr. 15, 1975**

[54] **HOLE CUTTER**

[75] Inventors: **George E. Thornton**, Athens; **Danvis T. Newby**, Huntsville, both of Ala.

[73] Assignee: **The United States of America as represented by the Administrator of the National Aeronautics and Space Administration**, Washington, D.C.

[22] Filed: **Sept. 19, 1973**

[21] Appl. No.: **398,901**

[52] **U.S. Cl.** **408/186**; 408/112; 408/193; 408/195

[51] **Int. Cl.** **B23b 51/04**

[58] **Field of Search** 408/186, 193, 195, 196, 408/197, 198, 95, 96, 97, 112

[56] **References Cited**

UNITED STATES PATENTS

769,200	9/1904	Uschold	408/112
2,527,968	10/1950	Sherman et al.	408/112 X
2,628,512	2/1953	Lankford	408/198
3,065,654	11/1962	Critelli et al.	408/112

Primary Examiner—Leonidas Vlachos
Attorney, Agent, or Firm—Wayland H. Riggins; L. D. Wofford, Jr.; John R. Manning

[57] **ABSTRACT**

An adjustable hole cutter for use in forming circular openings in workpieces. The hole cutter is characterized by a mount of a substantially planar configuration, positionable into a plane paralleling the working plane of a selected workpiece, a shaft for imparting rotary motion to the mount about an axis of rotation normally related to the working plane, a plurality of stabilizing struts for resiliently supporting the mount in parallelism with the working plane as rotary motion is imparted thereto, a drill bit for drilling a pilot hole concentric with the axis of rotation, and an elongated cutting tool adjustably seated within a radially extended slot.

9 Claims, 6 Drawing Figures

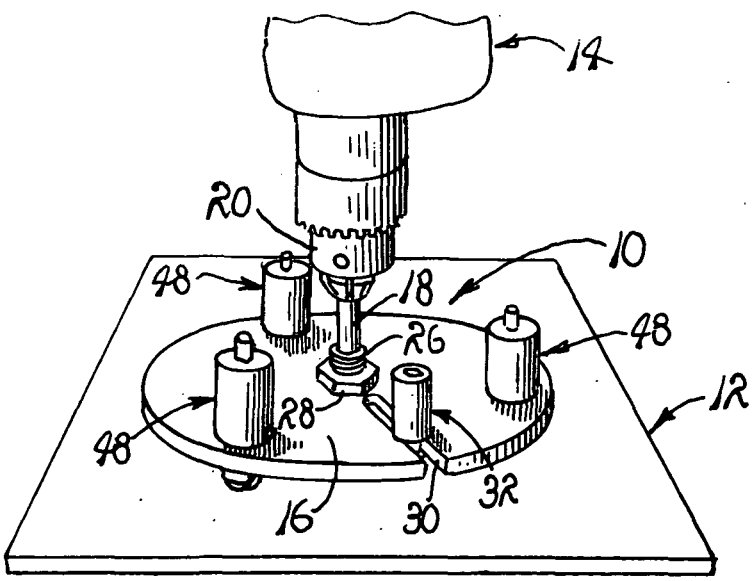

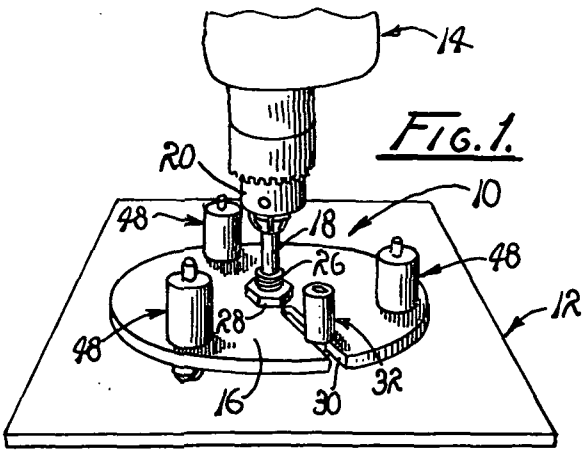

FIG. 1.

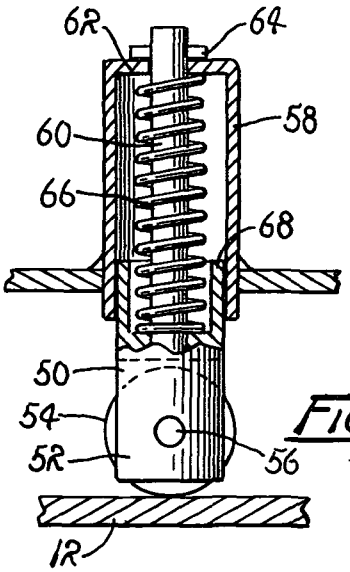

FIG. 4.

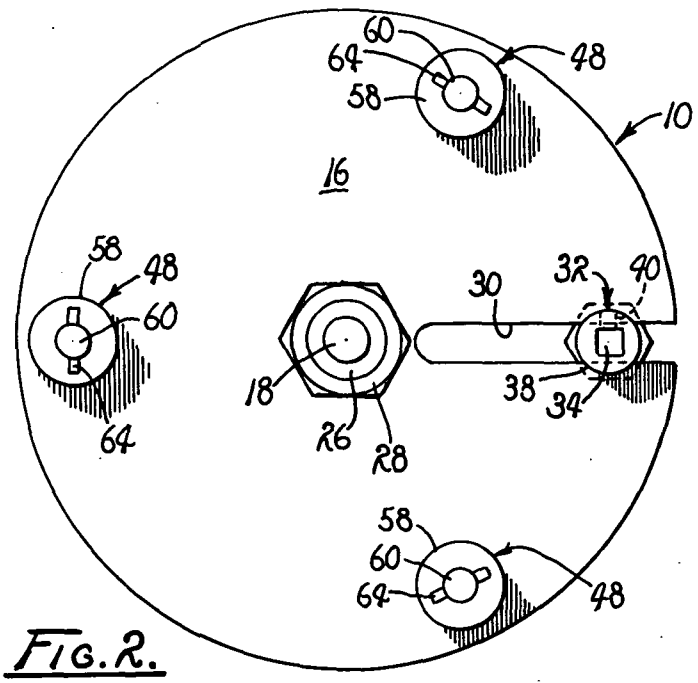

FIG. 2.

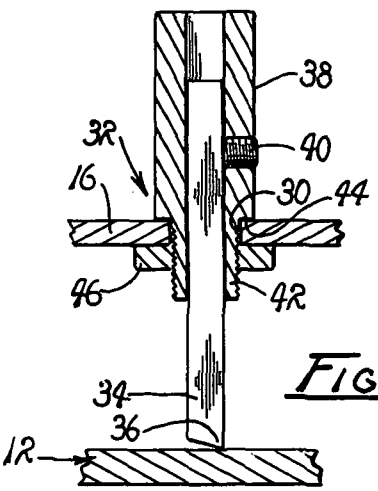

FIG. 5.

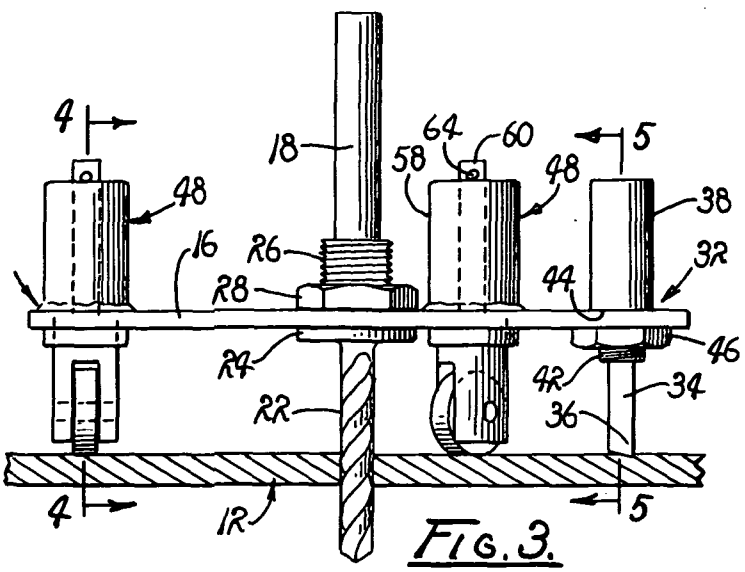

FIG. 3.

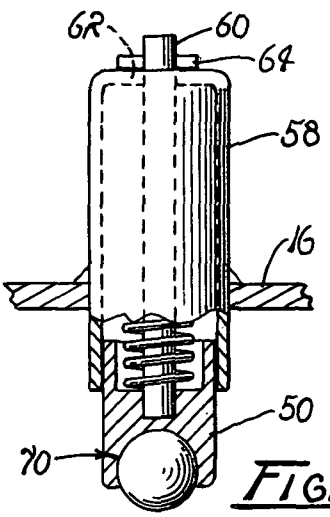

FIG. 6.

HOLE CUTTER

ORIGIN OF THE INVENTION

The invention described herein was made by employees of the United States Government and may be manufactured and used by or for the Government for governmental purposes without the payment of any royalties thereon or therefor.

BACKGROUND OF THE INVENTION

The invention relates to devices for cutting openings in workpieces and more particularly to an improved adjustable hole cutter for use in forming circular openings in workpieces.

Heretofore, various types of cutters have been devised for cutting circular openings in workpieces formed of both metallic and non-metallic materials. One type of cutter often employed is the so-called "hole saw" which includes an endless saw blade seated about the periphery of a supporting disk and driven in rotation by a drill motor or the like. Such devices normally are not adjustable, are very difficult to sharpen, are readily fouled by chips, dust and similar debris. Moreover, such devices have a fixed diameter so that holes of only a single dimension can be cut.

Another type of hole saw or circular cutter is typified by the device disclosed in U.S. Letters Pat. No. 3,124,182, issued to Howard Silken Mar. 10, 1964. This device includes a bit, driven by a drill motor, which penetrates the workpiece and functions as a side cutter to form a circular cut. While such devices are readily adjustable for cutting holes of different diameters, the device requires a substantial amount of effort and skill in properly advancing the cutting bit along a circular path. Further, certain apparent difficulties are encountered when employing this and similar devices for cutting holes in metallic stock materials.

Another cutting tool is typified by the tool shown in U.S. Letters Pat. No. 1,270,254, issued to Christopher Bach, Jr. June 25, 1918. This cutter employs a knife blade which, of course, is not designed for high-speed performance and simply is not intended for use in cutting metals.

Another tool is typified by the tool shown in U.S. Letters Pat. No. 2,463,024 which employs an eccentric cutting tool. It is important to note that while a tool having a single cutting member eccentrically related with the tool's axis of rotation can be easily sharpened, employed without fouling and can readily be adjusted for cutting holes of different diameters, difficulty often is encountered in supporting the mount for the tool in substantial parallelism with the working plane. Thus, there is a propensity for the mount to tip relative to the working plane with an attendant loss of tool control.

It should therefore be apparent that hole cutters heretofore available simply do not completely satisfy existing needs. It is therefore the general purpose of the instant invention to provide a hole cutter for use in forming circular openings, of selected diameters, in workpieces, of both metallic and non-metallic materials, and which can be one which can be sharpened quite readily and employed without being fouled by debris created while performing cutting operations.

OBJECTS AND SUMMARY OF THE INVENTION

It is therefore the object of the instant invention to provide a hole cutter for use in forming circular openings in workpieces.

It is another object to provide an adjustable hole cutter for use in forming circular openings having preselected diameters.

It is another object to provide an adjustable hole cutter for use in accurately forming circular openings with minimal skill.

It is another object to provide an adjustable hole cutter particularly suited for use in performing high-speed cutting operations without experiencing loss of tool control.

These and other objects and advantages are achieved through the use of an adjustable hole cutter including a mount, a shank extended from the mount and configured to be received within the chuck of a drill motor, a drill bit coaxially aligned with the shank for forming a centering hole, an elongated cutting tool radially spaced from the drill bit and a plurality of supports for resiliently supporting the mount in substantial parallelism with the working plane as the cutting tool is advanced along an arcuate path in the working plane for forming a circular opening, as will hereinafter become more readily apparent by reference to the following descriptions and claims in light of the accompanying drawings.

BRIEF DESCRIPTION OF THE DRAWINGS

FIG. 1 is a perspective view of a hole cutter embodying the principles of the instant invention, depicting one manner in which the hole cutter is employed for cutting circular openings.

FIG. 2 is a top plan view, on an enlarged scale, of the hole cutter shown in FIG. 1.

FIG. 3 is a side elevation of the hole cutter, illustrating the relationship of a cutting tool with a plurality of resilient stabilizing struts.

FIG. 4 is a partially sectioned view of one of a first form of stabilizing struts, taken generally along line 4—4 of FIG. 3.

FIG. 5 is a partially sectioned elevational view of the cutting tool, taken generally along line 5—5 of FIG. 3.

FIG. 6 is a partially sectioned fragmentary view of the modified form of stabilizing struts provided for supporting the tool mount.

DESCRIPTION OF THE PREFERRED EMBODIMENT

Referring with more specificity to the drawings, wherein like reference characters designate like or corresponding parts throughout the several views, there is shown in FIG. 1 a hole cutter **10** which embodies the principles of the instant invention.

The hole cutter **10**, as depicted in FIG. 1, is disposed in an operative disposition relative to the working plane of a workpiece **12**. As herein employed, the term working plane refers to the plane of the kerf formed by the cutting tool. The cutter **10** is driven by a drill motor **14**, provided for imparting rotary motion to the hole cutter **10**. It is to be understood that the particular drill motor employed forms no part of the instant invention. While the hole cutter **10** is particularly suited for use with portable, hand-held drill motors, drill motors for stationary drill presses can be employed equally as well.

A tool mount **16** of a substantially disk-shaped configuration serves as a base for the hole cutter **10**. While the tool mount **16** is of a disk-shaped configuration, it is to be understood that the suitable configuration can be employed equally as well. For example, a mount having a configuration conforming to that of a so-called spider functions quite satisfactorily.

Extended from the tool mount **16**, normal to the plane thereof, there is a shank **18** configured to be received within a chuck **20** of the drill motor **14**. The chuck serves to couple the hole cutter **10** to the drill motor in a manner well understood by those familiar with the operation of drill motors, whereby the drill motor **14** is readied to impart rotary motion to the tool mount **16**, via the shank **18**.

Referring now to FIG. **3**, a drill bit **22** is coaxially aligned with the shank **18** and rigidly affixed to the tool mount **16**, in any suitable means, as by welding, for example. The bit **22** serves to form a centering hole, not designated. As a practical matter, the shank **18** and the drill bit **22** may be a unitary member extended through an opening, not designated, formed in the plate **16**. In such instances, a stop collar **24** is welded or otherwise rigidly secured to the drill bit **18**, while a nipple **26** is welded or otherwise rigidly secured to the shank **18** for receiving a screw-threaded jamb-nut **28**. The nut **28** is torqued sufficiently for forcing the adjacent surfaces of the stop collar **24** and the jamb-nut **28** into a locking engagement with the adjacent surfaces of the tool mount **16**.

As best shown in FIG. **2**, the tool mount **16** also includes a radial slot **30** within which is seated a cutting tool, generally designated **32**. The slot **30** extends from near the center of the tool mount **16** to the periphery thereof and accommodates radial displacement of the cutting tool therealong for adjustment purposes. Accordingly, it is to be understood that the cutting tool **32** is repositionable along the radial slot **30** for varying the spacing of the cutting tool from the axis of rotation whereby the diameter of the circular opening cut by the hole cutter **10** may selectively be varied.

As shown in FIG. **5**, the cutting tool **32** includes a depending blade **34** having a lip **36** ground at a suitable angle for purposes of penetrating the surface of the workpiece **12**. Of course, the angle to which the lip is ground is dictated, in part, by the particular material from which the workpiece is formed. The blade **34** serves to form a kerf in the surface of the workpiece, as lateral motion is imparted to the blade.

Since cutting tools employ such blades, as is well known, a detailed description of the blade **34** is omitted in the interest of brevity. However, it is to be understood that the blade **34** is received within a bore, not designated, of a chuck **38**. A screw-threaded setscrew **40** is provided for securing the blade **34** within the chuck **38**. The chuck **38** also includes, at its base, an externally threaded terminal segment **42** terminating at an annular shoulder **44**. The segment **42** is of a diameter substantially equal to the width of the radial slot **30** so that the shoulder **44** engages the adjacent planar surfaces of the tool mount **16** and functions as a supporting shoulder for the chuck **38**. An internally threaded jamb-nut **46** is received by the terminal segment **42** of the chuck **38**, at the surface of the mount **16** opposite that engaged by the shoulder **44**. This nut serves to interlock the chuck **38** with the tool mount **16**, through frictional engagement, as the nut **46** is advanced along the threaded surface of the terminal segment **42** of the chuck **38** into engagement with the adjacent surface of the mount. Thus, a repositioning of the cutting tool **32** along the radial slot **30** is facilitated simply by releasing the jamb-nut, repositioning the chuck and thereafter tightening the jamb-nut for securing the chuck **38** in place, relative to the slot **30**.

In order to impart stability to the mount, a plurality of stabilizing struts **48** are rigidly affixed at equidistances about the periphery of the tool mount **16**, with one strut being disposed in diametric opposition with the cutting tool **32**. As shown in FIG. **4**, each of the struts **48** includes a spring-biased support **50** which terminates in a yoke **52**. Within the yoke there is seated a wheel **54**. The wheel **54**, in turn, is pinned to the yoke **52** through a use of a suitable axle **56**. The support **50** is telescopically received within a tubular shroud **58** extended through a suitable opening, not designated, formed in the mount **16** and welded or otherwise rigidly affixed thereto. A guide pin **60** integral with the support **50** is extended through a suitable opening, also not designated, formed in a closure plate **62** provided for the shroud **58**. A stop pin **64** is affixed to the distal end of the guide pin **60** and serves to preclude an extraction of the pin from the opening formed in the closure plate **62**.

Within the shroud **58** there is provided, in concentric relation with the guide pin **60**, a helical compression spring **66**. The spring **66** is seated in a cup **68** formed within the support **50** in circumscribing relation with the base portion of the guide pin **60**. The spring **66** abuts the inner surface of the end plate **62** of the shroud **58** and thus continuously urges the support in displacement away from the tool mount **16**. Thus, the support **50** is afforded spring-biased telescopic reciprocation relative to the shroud **58**. The struts **48** serve as support members for resiliently supporting the tool mount **16** against inclination relative to the working plane of the workpiece **12** as rotary motion is imparted to the mounting member **16**. Hence, the lip **36** of the blade **34** is permitted to penetrate the surface of the workpiece **12** as force is applied in a vertical direction to the shank **18** so that control thereof is readily maintained, while displacement of the cutting blade **34** along a circular path is accommodated.

In some instances, it has been found preferable to employ a ball-and-socket combination, designated **70**, FIG. **6**, for supporting the strut **48** in lieu of a wheel as illustrated in FIG. **4**. Among the advantages realized through the employment of the ball and socket **70** for supporting the strut **48** is that of maintaining point contact with the surface of the workpiece **12**. Moreover, omnidirectional rotation of the supporting surfaces for the struts **48** is thus facilitated. It is to be understood that the ball-and-socket combination can be fabricated in any suitable manner so long as the ball is permitted to engage the surface of the workpiece. It is to be further understood that the struts **48** whether supported by a yoke **52** and wheel **54**, as illustrated in FIG. **4**, or the ball and socket **70**, as shown in FIG. **6**, impart a stabilizing effect to the tool mount **16** as the mount is driven in rotation for cutting a circular opening in a workpiece **12** so that control over the operation of the cutting tool **32** is enhanced.

OPERATION

It is believed that in view of the foregoing descrip-

tion, the operation of the device will readily be understood and it will be briefly reviewed at this point.

With the hole cutter **10** assembled in the manner hereinbefore described, it is readied intersecting use in cutting circular openings of preselected diameters in a workpiece **12** by repositioning the cutting tool within the radial slot **30** and securing the cutting tool in place by tightening the nut **46**. Thereafter, the drill motor **14** is coupled with the hole cutter **10** by securing the shank **18** within the chuck **20**. The drill motor **14** is now prepared to serve as a source of energy for both rotary and linear forces employed in driving the cutting tool **32**. Once the hole cutter **10** is positioned above a workpiece **12**, and linear motion, along a path intersection the working plane, and rotary motion, about an axis substantially normal to the working plane, are simultaneously imparted to the hole cutter, the bit **22** forms a centering opening, not designated, in the workpiece **12**. Continued rotary and linear motion of the cutter **10** causes the stabilizing struts **48** to engage the outer surface of the workpiece **12**, whereupon the spring-biased support **50** is forced inwardly into the shroud **58** and the lip **36** of the blade **34** forcibly penetrates the surface of the workpiece. The stabilizing struts **48** at all times impart stability to the tool mount **16**. This stability enhances the control achieved over the tool **32** as the tool is advanced by the drill motor **14** for forming a circular opening in the workpiece. Due to the fact that the cutting tool **32** employs a single blade having a cutting lip, the hole cutter **10** can be driven at relatively high speeds without becoming fouled by chips and the like.

In view of the foregoing, it should readily be apparent that the hole cutter **10** of the instant invention serves to solve perplexing problems of providing a hole cutter for rapidly and accurately forming holes of varying diameters while utilizing minimal skill.

Although the invention has been herein shown and described in what is conceived to be the most practical and preferred embodiment, it is recognized that departures may be made therefrom within the scope of the invention, which is not to be limited to the illustrative details disclosed.

We claim:

1. An adjustable hole cutter for use in forming circular openings in workpieces comprising:

a tool mount positionable into a plane paralleling the working plane of a selected workpiece;

means for imparting rotary motion to said mount about an axis of rotation normal to the working plane;

support means affixed to said mount for resiliently supporting the mount against displacement along a linear path extended toward the workpiece as rotary motion is imparted to the mounting member;

a elongated cutting tool;

means for affixing said cutting tool to said mount in a projected relationship therewith for engaging the workpiece as the mount is displaced along the linear path;

said support means including a plurality of stabilizing struts affixed to the mount, and a plurality of spring-biased supports including strut-supporting rollable elements mounted on said struts for engaging selected portions of the surface of the workpiece.

2. The hole cutter of claim **1** wherein said rollable elements comprise wheels.

3. The hole cutter of claim **1** wherein said rollable elements comprise balls.

4. The hole cutter of claim **1** wherein said means for imparting rotary motion to said mount includes an elongated shank rigidly affixed to the mount and extended in concentric relation with said axis of rotation.

5. The hole cutter of claim **4** further comprising a drill bit rigidly affixed to said mount in coaxial alignment with said shank for drilling a centering hole in the workpiece as the mount is displaced along said linear path.

6. The hole cutter of claim **5** wherein said shank is configured to be received within a chuck of a drill motor.

7. The hole cutter of claim **1** wherein said mount is of a disk-shaped configuration and said means for affixing said cutting tool to the mount includes means defining a radially extended slot for receiving said cutting tool, whereby the cutting tool in affixed to said mount at a variable distance from said axis.

8. The hole cutter of claim **2** wherein each of said spring-biased wheels is supported by means including:

A. a bifurcated yoke;

B. an axle-supported wheel seated in the yoke;

C. a guide pin affixed to said yoke extended in parallelism with said axis of rotation;

D. a shroud of a cylindrical configuration receiving said guide pin in a concentric relationship therewith;

E. a compression spring seated on said yoke and disposed within said shroud, concentrically related to said guide pin for forcing said yoke outwardly from said shroud; and

F. means including a motion-limiting pin affixed to said guide pin and supporting said guide pin against displacement from the shroud.

9. The hole cutter of claim **8** wherein said means for affixing said cutting tool to said mount includes means for adjusting the effective length of the cutting tool.

* * * * *