NASA TECHNICAL NOTE

NASA TN D-7991

NASA TN D-7991

APOLLO EXPERIENCE REPORT - GUIDANCE AND CONTROL SYSTEMS: AUTOMATED CONTROL SYSTEM FOR UNMANNED MISSION AS-201

Gene F. Holloway
Lyndon B. Johnson Space Center
Houston, Texas 77058

NATIONAL AERONAUTICS AND SPACE ADMINISTRATION • WASHINGTON, D. C. • JULY 1975

1. Report No.	2. Government Accession No.	3. Recipient's Catalog No.
NASA TN D-7991		

4. Title and Subtitle	5. Report Date
APOLLO EXPERIENCE REPORT GUIDANCE AND CONTROL SYSTEMS: AUTOMATED CONTROL SYSTEM FOR UNMANNED MISSION AS-201	July 1975
	6. Performing Organization Code JSC-08491
7. Author(s) Gene F. Holloway	8. Performing Organization Report No. S-431
9. Performing Organization Name and Address Lyndon B. Johnson Space enter Houston, Texas 77058	10. Work Unit No. 914-50-30-01-72
	11. Contract or Grant No.
12. Sponsoring Agency Name and Address National Aeronautics and Space Administration Washington, D.C. 20546	13. Type of Report and Period Covered Technical Note
	14. Sponsoring Agency Code

15. Supplementary Notes

16. Abstract

An unmanned test flight program was required to evaluate the Apollo command module heat shield and Apollo command and service module/Saturn launch vehicle structural integrity. An automated control system was developed to provide the mission event sequencing, the real-time ground control interface, and the backup attitude reference system for unmanned mission AS-201. Descriptions of the required mission events, the design logic, the redundancy concept, and the ground-support-equipment concept are included. Some of the more interesting development problem areas are discussed. The mission event time line and the real-time ground command list are included to provide an outline of the control system capabilities and requirements. The unmanned AS-201 mission was accomplished with the automated control system, which functioned correctly without any flight anomalies.

17. Key Words (Suggested by Author(s))	18. Distribution Statement
*Apollo Program *Saturn Launch Vehicles *Automatic Sequencing *Backup Attitude Reference System *Command and Service Module *Control Programer *Unmanned Spacecraft	STAR Subject Category: 12 (Astronautics, General)

19. Security Classif. (of this report)	20. Security Classif. (of this page)	21. No. of Pages	22. Price*
Unclassified	Unclassified	15	$3.25

*For sale by the National Technical Information Service, Springfield, Virginia 22151

APOLLO EXPERIENCE REPORT

GUIDANCE AND CONTROL SYSTEMS:

AUTOMATED CONTROL SYSTEM FOR UNMANNED MISSION AS-201

By Gene F. Holloway
Lyndon B. Johnson Space Center

SUMMARY

An automated control system was developed to provide the event sequencing and backup attitude control for Apollo unmanned test flight AS-201. Existing flight-qualified components and electronic technologies were used in the automated control system design to meet the critical 14-month development schedule. The system design had the flexibility and the capability needed to reconfigure for changes in the mission event time line. This flexibility was demonstrated by incorporating changes in the programer event sequence for a new mission time line as late as 2 weeks before integrated testing started at the NASA John F. Kennedy Space Center. All system requirements of the automated control system were satisfactorily achieved with the successful accomplishment of the Apollo AS-201 test flight.

INTRODUCTION

The structure and heat-shield design of the Apollo command module (CM), although similar to those of the Mercury and Gemini spacecraft, had enough differences to require an unmanned test flight program. The primary objectives of the first unmanned Apollo supercircular mission, AS-201/spacecraft 009, were to demonstrate the command and service module (CSM)/Saturn IB (S-IB) structural integrity and to evaluate the heat-shield performance. An automated control system for unmanned flights was developed by the NASA and the CSM prime contractor to provide the automatic event sequencing for the spacecraft and to provide a real-time ground command interface for backup attitude control and sequencing. The development of the unmanned automated control system from the initial concepts to the operational flight is reviewed in this report. The experiences outlined have resulted in information useful for future unmanned test flight equipment design.

As an aid to the reader, where necessary the original units of measure have been converted to the equivalent value in the Système International d'Unités (SI). The SI units are written first, and the original units are written parenthetically thereafter.

SYSTEM OPERATION DESCRIPTION

Unmanned flights were required to verify the CSM/S-IB structural integrity and to evaluate the CM heat-shield ablator performance. These first-order flight objectives were grouped with several other test objectives and subsystem performance evaluations that had to be demonstrated successfully before the spacecraft could be rated for manned flight. The automated control system (fig. 1) consisted of the automated command control (ACC) unit, the radio command control (RCC) unit, the sequential timer, and the attitude reference system (ARS). The ACC, the RCC, the sequential timer, and the associated cable set were further identified as the control programer (CP).

The ACC provided the event-sequencing functions to the various interfacing subsystems as a function of mission-elapsed time. The events that caused output switching of other subsystems as a function of time are listed in table I. These event times were provided to the ACC by two timers developed for the Agena B program. The mission event times were preestablished by the flight plan and were adjustable in 0.5-second increments to a 2498-second mission duration. One timer was for normal mission functions (table II) and was capable of providing 22 event settings. The other timer was for abort functioning and provided 14 event settings.

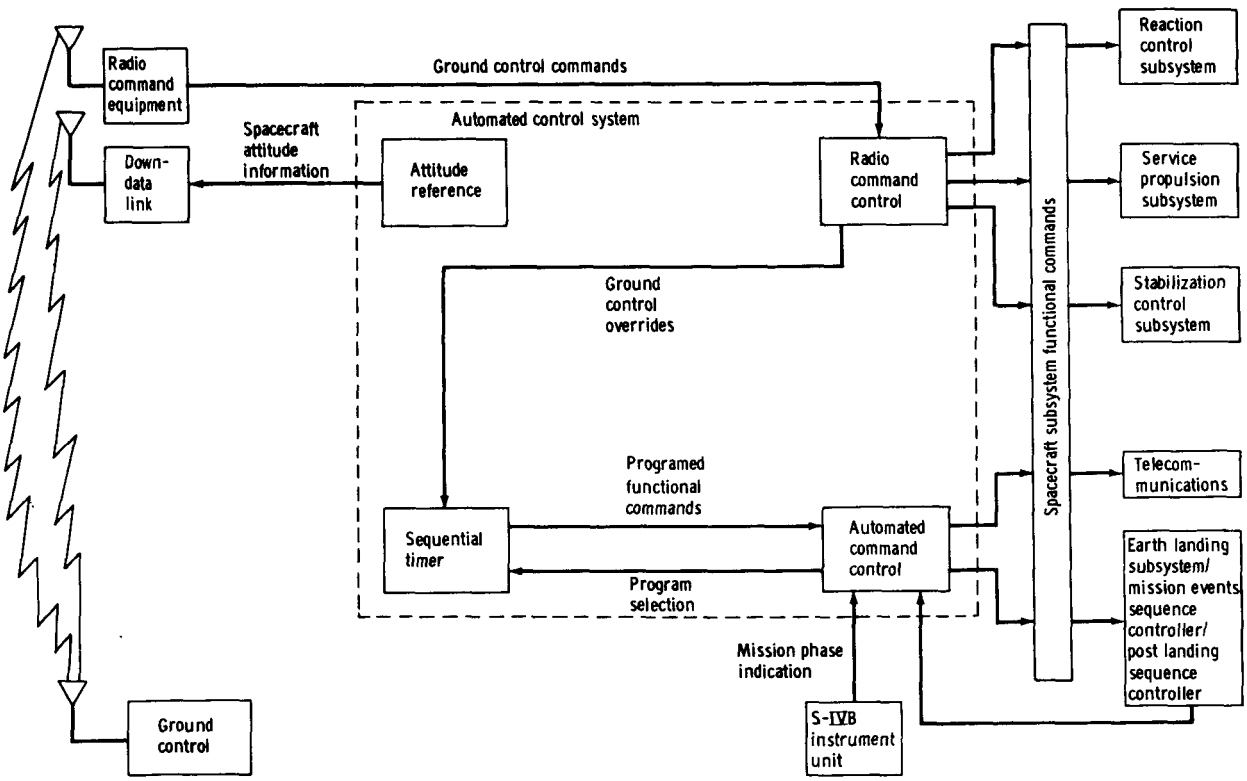

Figure 1.- Automated control system functional interface block diagram.

TABLE I. - MISSION EVENT DESCRIPTION

Event	Result of event
E1	Arm service propulsion subsystem (SPS) thrust solenoids
E2	Plus-X translation
E3	Stabilization control subsystem (SCS) entry mode enable
E4	Minus 5-deg/sec pitch rate
E6	Plus 5-deg/sec roll rate
E7	CM/service module (SM) separation
E8	Earth landing subsystem (ELS) activate
E9	Uncage SCS gyros
E10	SPS thrust OFF
E11	Arm 0.05g backup
E12	SPS thrust ON
E13	S-IVB/spacecraft separation
E14	Escape tower jettison fire
E15	Launch escape motor fire
E16	Transfer thrust OFF control
E17	Tape recorders OFF
E18	Tape recorders ON
E22	Start environmental control subsystem glycol evaporator operation
E23	First gimbal position set
E24	Second gimbal position set
E25	Gimbal motors start A
E26	Gimbal motors start B

TABLE II.- CONTROL PROGRAMER COMMANDS SEQUENCE FOR NORMAL MISSION TIME LINE

Sequence number	Result of event	Event	Time from range zero, sec	
			Planned	Actual
1	Start normal timer	--	652.7	663.1
2	Tape recorders OFF	E17 ON	654.7	665.2
3	S-IVB/spacecraft separation signal ON	E13 ON	832.7	(a)
	Uncage SCS gyros	E9 ON	832.7	843.2
4	S-IVB/spacecraft separation signal OFF	E13 OFF	836.2	(a)
	Plus-X translation ON	E2 ON	836.2	846.7
5	Plus-X translation OFF	E2 OFF	854.2	864.6
6	Plus-X translation ON	E2 ON	1170.7	1181.2
	First gimbal position set	E23 ON	1170.7	(a)
7	Primary SPS gimbal motors ON	E25 ON	1185.7	1196.1
8	Secondary SPS gimbal motors ON	E26 ON	1186.7	(a)
	Remove primary motors ON command	E25 OFF	1186.7	(a)
9	Remove secondary motors ON command	E26 OFF	1187.7	(a)
10	Arm SPS thrust solenoids	E1 ON	1200.7	1211.2
	SPS thrust on ON	E12 ON	1200.7	1211.2
11	Tape recorders ON	E18 ON	1311.2	1321.9
12	Plus-X translation OFF	E2 OFF	1384.7	1395.2
	SPS thrust on OFF	E12 OFF	1384.7	1395.2
13	SPS thrust off ON (secondary source of SPS control)	E10 ON	1385.0	1395.4
14	Plus-X translation ON	E2 ON	1385.2	1395.7
	SPS thrust off OFF	E10 OFF	1385.2	(b)
	Second gimbal position set	E24 ON	1385.2	1395.7
15	SPS thrust on ON	E12 ON	1400.2	1410.7
16	SPS thrust on OFF	E12 OFF	1410.2	1420.7
	Plus-X translation OFF	E2 OFF	1410.2	1420.7
17	Pitch rate (-5 deg/sec) ON	E4 ON	1413.7	1424.1
18	Pitch rate (-5 deg/sec) OFF	E4 OFF	1431.7	1442.1
19	CM/SM separation start	E7 ON	1443.7	(a)
	SCS entry mode ON	E3 ON	1443.7	1454.2
20	Pitch rate (-5 deg/sec) ON	E4 ON	1452.2	1462.6
21	Pitch rate (-5 deg/sec) OFF	E4 OFF	1468.7	1479.1
	Roll rate (+5 deg/sec) ON	E6 ON	1468.7	1479.2
22	Roll rate (+5 deg/sec) OFF	E6 OFF	1504.7	1515.1
	Arm 0.05g backup	E11 ON	1504.7	(a)
	ELS activate	E8 ON	1504.7	(b)

[a]No measurement available to determine time.

[b]Time could not be determined from intermittent data.

The timers used the spacecraft 400-hertz alternating-current power source to provide rotation to mechanisms using preset cams for the timing functions. The minimum interval between each event setting was 0.5 second with an accuracy of ±0.2 second. The maximum duration between the first and last events for an individual timer was 2498 seconds. Timer motor runup time was approximately 0.1 second for power applications. Approximately 0.3 second was required for the end of timer motor rotation after power turnoff.

The RCC unit of the CP provided the real-time ground control linkage between the updata link (UDL)/spacecraft radio command equipment (RCE) and the spacecraft operational subsystems (fig. 1). The RCC unit used input signals provided by the 15 relay contacts of the RCE. These 15 RCE input signals, processed by the RCC internal relay logic, provided the control capability for 38 real-time commands. The RCC used relay driver networks to ensure that signals of marginal voltage levels from the UDL/RCE would be presented to the RCC logic relay solenoids at the proper amplitude and for the proper time period to accomplish the correct driving functions through the ACC and enable the onboard systems to carry out these commands.

The detailed functional description of each ground command that was designed to be processed by the radio command controller is shown in table III. The functions are self-explanatory. The relay numbers noted in the descriptions are located in the spacecraft 009 functional integrated system schematics.

The ARS consisted of a gyro package for providing backup attitude reference information to the mission control center. The downdata-link attitude reference measurements were displayed and compared in real time in the mission control center for establishing vehicle orientation and system performance. The ARS provided flight control personnel in the mission control center with adequate information on the CM attitude to enable them to uplink the "direct rotation" ground commands (ground commands 10 to 15) for specific time periods and thus to reorient the spacecraft. This control feature was designed for emergency backup ground control and was not used during the flight.

The normal mission mode was inititated when the ACC received the "All S-IVB engines off" command from the Saturn IVB (S-IVB). This command is considered the first sequence of the normal mission time line (table II). The list of mission sequences contained in table II includes both planned and actual occurrence times. The event-switching accuracy was specified to be ±0.2 second, with the accuracy for four critical events — E4, E6, E10, and E12 (table I) — specified to be ±0.1 second. A comparison of mission sequence times for the AS-201 mission shows that the S-IVB gave the actual "All S-IVB engines off" command (start normal timer) approximately 10.5 seconds after the preplanned time (table II). This resulted in an actual flight time delay of 10.5 seconds in the remaining sequences because the Agena B timer operates on preset cams. When the late start of the normal timer is considered, only one event varied more than 0.1 second from the preset nominal. The variant event was sequence 11, "Tape recorders on," which differed 0.2 second from the preset nominal. The measurement sample rates could have contributed to this error; however, the time was within the specification of 0.2 second.

TABLE III.- GROUND COMMAND DESCRIPTION

Code	Command	Relay type		Function performed
		Latching	Momentary	
[a]GC1	Roll rate backup	X		Activates relays 23K21 (yaw axis roll rate transfer), 19K1 (rate input transfer, roll), and 12K3 (cage roll gyro); inhibits +5-deg/sec ROLL RATE command; inhibits +X TRANSLATION; and commands THRUST OFF
GC2	Pitch rate backup	X		Activates relays 25K1 (rate input transfer pitch) and 12K1 (cage pitch gyro); inhibits ±5-deg/sec PITCH RATE command; inhibits +X TRANSLATION; and commands THRUST OFF
GC3	Yaw rate backup	X		Activates relays 23K1 (rate input transfer yaw) and 12K2 (cage yaw gyro); inhibits +X TRANSLATION; and commands THRUST OFF
GC4	Roll channel quads B and D disable	X		Disables automatic commands to reaction control subsystem (RCS) jets 9, 10, 11, and 12
GC5	Pitch channel disable	X		Disables automatic commands to RCS jets 1, 2, 3, and 4
GC6	Yaw channel disable	X		Disables automatic commands to RCS jets 5, 6, 7, and 8
GC7	Roll attitude gyro interrupt	X		Activates relays 12K3 (cage roll gyro), 19K20 (pseudorate cutout), and 19K4 (reaction jet controller (RJC) attitude switching); inhibits +5-deg/sec ROLL RATE command; inhibits +X TRANSLATION; and commands THRUST OFF
GC8	Pitch attitude gyro interrupt	X		Activates relays 25K20 (pseudorate cutout), 25K4 (RJC attitude switching), and 12K1 (cage pitch gyro); inhibits +5-deg/sec PITCH RATE command; inhibits +X TRANSLATION; and commands THRUST OFF
GC9	Yaw attitude gyro interrupt	X		Activates relays 23K20 (pseudorate cutout), 23K4 (RJC attitude switching), and 12K2 (cage yaw attitude gyro); inhibits +X TRANSLATION; and commands THRUST OFF
GC10	Direct rotation (positive pitch)		X	Activates relays 25K18 (automatic control interrupt); activates RCS jets 1 and 3 through direct coils (not through jet select logic)
GC11	Direct rotation (negative pitch)		X	Activates relays 25K18 (automatic control interrupt); activates RCS jets 2 and 4 through direct coils (not through jet select logic)
GC12	Direct rotation (positive yaw)		X	Activates relays 23K18 (automatic control interrupt); activates RCS jets 5 and 7 through direct coils (not through jet select logic)
GC13	Direct rotation (negative yaw)		X	Activates relays 23K18 (automatic control interrupt); activates RCS jets 6 and 8 through direct coils (not through jet select logic)
GC14	Direct rotation (positive roll)		X	Activates relays 19K18 (automatic control interrupt); activates RCS jets 9, 11, 13, and 15 through direct coils (not through jet select logic)
GC15	Direct rotation (negative roll)		X	Activates relays 19K18 (automatic control interrupt); activates RCS jets 10, 12, 14, and 16 through direct coils (not through jet select logic)
GC16	Direct thrust ON		X	Activates relays 25K15, 23K15, 19K15 (pitch, yaw, and roll engine ignition) and 25K18 and 23K18 (automatic control interrupt, pitch and yaw); applies 28 V dc to high side; grounds the side of thrust coils; and is reset by GC17

[a]Ground command.

TABLE III.- GROUND COMMAND DESCRIPTION - Concluded

Code	Command	Relay type		Function performed
		Latching	Momentary	
GC17	Direct thrust OFF	X		Deactivates relays 25K15, 23K15, 19K15 (pitch, yaw, and roll engine ignition) and 25K18 and 23K18 (automatic control interrupt, pitch and yaw); removes 28-V dc power from high side of thrust coils; and is reset by GC16
GC18	Direct ullage		X	Activates relays 25K18 and 23K18 (automatic control interrupt, pitch and yaw); arms (and latches armed) the SCS integrator; activates RCS jets 1, 2, 5, and 6 through direct coils (not through jet select logic)
GC19	SM quad A propellant OFF		X	Disables RCS jets 2, 3, 13, and 16
GC20	SM quad B propellant OFF		X	Disables RCS jets 6, 7, 9, and 12
GC21	SM quad C propellant OFF		X	Disables RCS jets 1, 4, 14, and 15
GC22	SM quad D propellant OFF		X	Disables RCS jets, 5, 8, 10, and 11
GC23	CM system A propellant OFF		X	Disables RCS jets 1, 2, 5, 8, 9, and 12
GC24	CM system B propellant OFF		X	Disables RCS jets 3, 4, 6, 7, 10, and 11
GC25	Abort	X		Before launch escape tower jettison, commands launch escape subsystem abort in master events sequence controller (MESC) and inhibits CP timers; after launch escape tower jettison but before S-IVB shutdown, starts SPS abort timer in CP and inhibits normal mission timer; after S-IVB shutdown, has no effect on spacecraft
GC26	ELS activate	X		Arms 7620-m (25 000 ft) barometric switch in ELS
GC27	Reset latch commands (except GC17)		X	Resets all latching ground commands except GC17
GC28	Roll channel quads A and C disable	X		Disables automatic command to RCS jets 13, 14, 15, and 16
GC29	0.05g backup	X		Activates relays 12K1, 12K2 (cage gyro, pitch and yaw), 25K4, 23K4 (RJC attitude switching, pitch and yaw), and 23K16 (roll to yaw coupling); inhibits ±5-deg/sec PITCH RATE command; inhibits +X TRANSLATION; and commands THRUST OFF
GC30	CM/SM separation and SCS entry mode enable	X		Activates relays 25K3, 23K3, 19K3 (attitude gyro accelerometer package attitude input pitch, yaw, and roll), 25K5, 23K5, and 19K5 (entry gain pitch, yaw, and roll); arms 0.05g switch; and starts CM/SM separation sequence in MESC
GC31	Launch escape tower jettison	X		Initiates escape tower jettison fire in MESC; arms abort timer; and starts backup tower jettison timer using the launch escape motor for jettison
GC32	SM quad B propellant ON		X	Enables RCS jets 6, 7, 9, and 12
GC33	SM quad C propellant ON		X	Enables RCS jets 1, 4, 14, and 15
GC34	SM quad D propellant ON		X	Enables RCS jets 5, 8, 10, and 11
GC35	SM quad A and CM system A propellant ON		X	Enables RCS jets, 2, 3, 13, and 16; enables CM jets 1, 2, 5, 8, 9 and 12
GC36	CM system B propellant ON		X	Enables CM jets 3, 4, 6, 7, 10, and 11
GC37	Normal timer start	X		Starts and latches normal timer on
GC38	S-IVB/spacecraft separation and uncage gyros	X		Deactivates relays 12K1, 12K2, and 12K3 (cage gyro pitch, yaw, and roll); enables -5-deg/sec PITCH RATE command, +5-deg/sec ROLL RATE command, and +X TRANSLATION; removes THRUST OFF command; and initiates S-IVB/spacecraft separation sequence in mission event sequencer

As planned for the first 16 mission sequences, the CSM was maintained at the attitude and relative orientation in space that was established by the Saturn instrument unit at the time of CSM/S-IVB separation. During the 18-second duration of sequences 17 and 18, precision torquing current was applied to the attitude gyros of the stabilization and control subsystem and the CSM was reoriented 90° (5 deg/sec for 18 seconds = 90°) in pitch. By this maneuver, the CSM was oriented for CM/service module (SM) separation. After separation (during sequences 20, 21, and 22), the CM orientation was changed 82.5° (5 deg/sec for 16.5 seconds = 82.5°) in pitch and 180° (5 deg/sec for 36 seconds = 180°) in roll to establish the reentry attitude for the CM.

DESIGN USING EXISTING TECHNOLOGY

The critical schedule requirements for the CP development necessitated the use of existing electronic technology. Whenever possible, existing components that had been used and qualified on other missile and space programs were used.

Hermetically sealed, general-purpose, all-welded-construction, microminiature relays were used extensively to establish the circuit logic and switching for the CP. The 28-V dc relays were rated at 2, 3, or 10 amperes. The relays were typically arranged as shown in figure 2, in which relay contacts are configured in the normally open state. Similar redundant configurations were used with the relay contacts in the normally closed state. Both momentary and latching relays were used in the CP design. Momentary relays remain switched into the changed state configuration as long as the switching signal to the relay solenoid is applied. Latching relays retain their switched "set" change of state until an additional "reset" switching signal is applied to the relay solenoid. The relay configurations shown in figure 2 were used to effect the desired logic circuitry.

The analysis of the mission-event criticality and its relative importance to the success of the mission determined the redundancy requirements of the circuit logic required to accomplish the mission event. A request for a definition of the requirements of the system interface was submitted to each engineering design group affected, and specific redundancy requirements on an event-by-event basis for the mission were obtained. The design of the CP was then established in accordance with these mission redundancy requirements. The redundancy requirements were classified into the following four general categories.

1. Simplex (not redundant) - The output or real-time command function may fail either "on" or "off" because of a single component failure (fig. 2(a)). This circuitry was used for noncritical functions.

2. Dual series (redundant) - The output or real-time command function shall not fail "on" as a result of any single component failure (fig. 2 (b)). This series redundancy was used to protect from a failure, an erroneous signal, or a noise pulse causing the event to occur inadvertently.

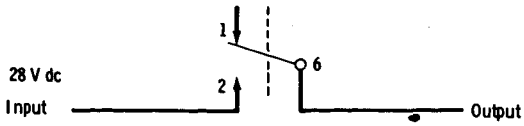

(a) Simplex (not redundant).

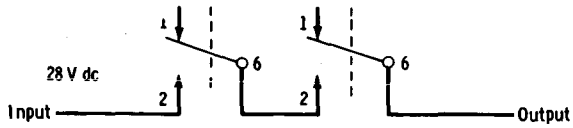

(b) Dual series (redundant).

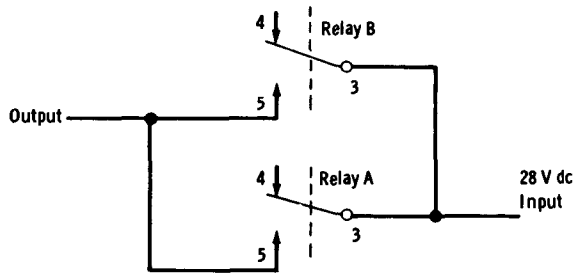

(c) Dual parallel (redundant).

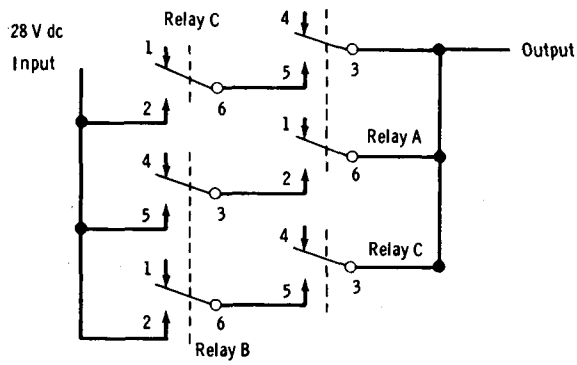

(d) Dual series, triply parallel (redundant).

Figure 2. - Circuit logic and switching relays.

3. Dual parallel (redundant) - The output or real-time command function shall not fail "off" as a result of any single component failure (fig. 2(c)). This parallel redundancy was used to ensure that important events occurred even after one failure.

4. Dual series, triply parallel (redundant) - The output or real-time command function must respond correctly in the event of a single component failure (fig. 2(d)). This complex redundant network was used in mission-critical paths in which it was required that any single failure or any spurious signal would not cause the loss or premature actuation of the critical mission function.

The Agena B timer was selected for the timing input to the CP because it was available off the shelf and had been flight qualified and successfully flown on 22 Agena missions. Because an off-the-shelf design was selected, the time required for delivery of the first pair of timers was shortened to approximately 14 weeks. The timers were carefully evaluated by the NASA in September 1964 and were found to have been previously tested to requirements that equaled or exceeded the Apollo Program specifications; because of their successful flight history, the timers were considered qualified by similarity. However, additional confidence tests were performed during the prototype buildup.

SCHEDULE-CRITICAL DEVELOPMENT

The scheduled development period to support the Apollo spacecraft 009 subsystem installation date for the CP was 14 months. The vendor had to work on a compressed schedule to meet the CP delivery date.

The vendor's schedule stipulated that only 2 weeks would be allowed between the breadboard hardware delivery and the production hardware delivery. This is an

impossible situation for a program in which the breadboard is to be evaluated and tested in the laboratory and the results of the evaluations are to be fed back into the production hardware design. To achieve the vendor schedule, the production hardware was manufactured in parallel with the breadboard evaluation. Any changes or modifications, or both, to the production hardware resulting from the breadboard evaluation were costly in terms of price and schedule.

The vendor's electromagnetic interference (EMI) evaluation of the hardware was the first example of the high program cost associated with a critically close delivery schedule. The EMI tests on qualification unit 2 at the vendor facility disclosed that the high design sensitivity of the relay drivers in the CP RCC unit permitted triggering of the drivers by noise as well as by the radio command signals. A resistor-capacitor filter network was designed and added to each relay driver as a piggyback module to correct the EMI noise problem. The addition of the piggyback modules to the unit design required a specific vibration qualification program.

The production unit 1 CP was delivered for spacecraft 009 subsystem installation in May 1965. Unit 1 was returned to the vendor facility in November 1965 to incorporate the piggyback filter and other design modifications and to correct some failures observed during the test program. Two of the failures are explained as follows.

1. During the qualification program, four tantalum wet-slug capacitors were subjected to reverse current and subsequently broke down because the test equipment had a higher electrical potential than that used on the qualification unit. The breakdown was sometimes self-healing; however, the timing function or other design function was lost at the time of the capacitor breakdown. The reverse-current condition was corrected by replacing the affected capacitors in the flight unit, by evaluating the test equipment thoroughly, and by correcting the test equipment in the areas in which reverse voltages occurred.

2. One diode failed during the qualification test program, and a similar diode failed during the vendor manufacturing buildup. By using X-ray techniques, it was determined that the diodes were contaminated by silver particles. It was presumed that silver pieces flaked off inside the diode case during vibration and thermal environment testing and eventually caused the diodes to short out. Early in December 1965, the vendor X-rayed the CP unit 1 diodes and discovered 50 questionable diodes. The diodes were replaced with diodes from a supply without contamination, and the CP was redelivered to the NASA John F. Kennedy Space Center (KSC) on December 19, 1965.

The test equipment fabricated for the CP consisted of a bench console to control the following functions: (1) load simulation, (2) radio command encoding, (3) power monitoring, (4) event simulation, (5) master clocking, and (6) channel control switching. The bench test console consisted of a power monitor panel, a digital voltmeter, a digital comparator, four power supplies, an indicator control panel, a master clock, and a printer. This equipment provided the stimuli and sensors necessary to verify that the design requirements of the CP had been met and that the CP was functionally acceptable for installation in the Apollo spacecraft.

The bench test console, in general, was too elaborate and too complex for the small production quantities of flight hardware and for the critically short delivery

schedules. Sufficient time was not allowed for proper qualification of this complex test equipment. To test the CP as a system, including the Agena B timers, the bench test console required a master clock to verify the timer-keyed events and to verify the internal timer delays of the RCC and of the automatic command controller. A printer was used with the test console to provide a tape record of the test times and the events, including the voltage levels that occurred at that time.

The tape format (fig. 3) consisted of 16 columns of digits. Column 10, representing the voltage potential, indicated voltage polarity, which was always positive. The first seven columns were digits reserved for the recorded event time, and the eighth column was blank. The digits in column 9 represented a code for the decimal-point placement for columns 11 to 15. Columns 11 to 15 were used for voltage readings. Column 16 remained blank as long as the test value was within specification, and this column had an asterisk if the test value were out of tolerance. The typical test tape sequence shown in figure 3 has an out-of-tolerance reading in row 2. The numeral "2" in column 9 means the decimal point is two places to the right (between columns 12 and 13) or "32.00 volts." Time increases from the bottom to the top of the tape. Several identical times may be recorded because of several events being keyed at one particular time. The test tape provides an accurate record of the test data that were used in establishing the end-item historical report for the CP. The end-item report was delivered with each subsystem and remained with the spacecraft as part of the acceptance data package. This lengthy description emphasizes the complexity of the test equipment used for a unit that had only one flight.

The CP qualification test specification levels and the CP test plan were approved on July 1, 1965, and the vendor was ready to begin tests on August 10, 1965. Qualification tests officially began September 22, 1965, and were completed November 15, 1965.

The qualification test program was success oriented; no time was allowed for design correction of any possible test failures or any resulting retest. Therefore, when the relay driver problem was discovered on CP qualification unit 2, an additional requalification program was established in late November 1965. The unit with the piggyback filter modules was retested in the vibration environment and passed successfully. The other two significant areas of interest during the qualification test program were the back-biased tantalum capacitor and the silver-contaminated diode. These problems were resolved, and the CP was successfully qualified for Apollo flight.

In spacecraft tests performed before the KSC integrated spacecraft tests, a prototype CP was used with the Agena B timers to provide the test sequencing. The CP successfully supported spacecraft testing, although there was much concern about its overall reliability. The fact that every redundant path of the CP could not be verified during spacecraft testing prompted many studies. The schematics of the parallel, series, and multiparallel paths of the CP were examined in detail. Each

Tape readings

Digit	1	2	3	4	5	6	7	8	9	10	11	12	13	14	15	16
	0	1	2	9	3	1	0		2	+	2	5	0	0	0	
	0	1	2	9	3	1	0		2	+	3	2	0	0	0	*
	0	1	2	4	3	1	0		2	+	2	5	0	0	0	
	0	1	2	4	3	1	0		2	+	2	5	0	0	0	
	0	1	2	4	3	1	0		2	+	2	5	0	0	0	

Figure 3.- Typical test tape section.

path in which the redundant elements were not verified during spacecraft testing was noted, and the criticality to the mission success of a failure in each unverified path was determined. A decision was made to fly the hardware without further attempts to verify the redundancy in spacecraft testing because every redundant component in the CP had been verified during the bench acceptance test just before delivery to the KSC.

The time line of the AS-201 mission was not firmly established when the CP was delivered for spacecraft testing in May 1965. The prime contractor and the NASA developed a plan whereby the Agena B timers would be finally set and delivered to the KSC just before performance of integrated spacecraft tests. The vendor was notified by NASA of the flight time-line settings and delivered the timers to the KSC 2 weeks later. The delivery date for integrated testing was met, and testing was resumed at the KSC for the February 26, 1966, launch. The unmanned sequencing requirements on future programs should be placed in a software program in which sequences could be changed without affecting the hardware.

The redundancy problem is of interest because the CP was not designed as two redundant systems (A and B), as was the Mercury, Gemini, and Apollo hardware. The CP used redundant internal logic and sometimes was triply or quadruply redundant. This CP redundancy design was theoretically more reliable than the two-system (A and B) design, but the CP redundancy was difficult to verify in the spacecraft. The problem was resolved, however, for the mission control programer (MCP) used for the later unmanned flights.

FLIGHT HISTORY

The first launch of a production Block I Apollo spacecraft using an S-IB booster was on February 26, 1966, at 11:12 a.m. eastern standard time. The total flight time was 37 minutes 19.7 seconds. The postlaunch report for mission AS-201 states, "The control programer performed properly throughout the mission, although all events were delayed approximately 10 seconds from the nominal time line because of a late initiation signal from the launch vehicle. The attitude reference system performed as expected with relatively high gyro-drifts appearing under g-loads." Table II contains the event-by-event comparison of actual and planned times. The postlaunch report also states, "The control programer performed nominally throughout the mission, providing a series of commands in the correct sequence and at the proper times within the limits of the timer." The only significant deviation of the flight was separation of the CSM/lunar module adapter from the S-IVB 10 seconds later than predicted. This event was used as the key starting event for the normal timer in the CP; as a result, each event occurred approximately 10 seconds late throughout the mission. In another deviation, the recovery aid (high-frequency antenna) was deployed but the signals from the antenna were not received in the recovery area. Because the CP was a one-time design, it was not tested after flight; therefore, it is not known whether the signal to activate the high-frequency transmitter was sent.

CONCLUSIONS AND RECOMMENDATIONS

The flight of the unmanned Apollo spacecraft 009 (mission AS-201) was successful. The flight and subsystem developmental objectives were met, and requirements of the automated control system were accomplished in meeting the flight test objectives.

Possible improvements in the development of the automated control system are as follows.

1. The mission should be defined early in the flight-planning stages to prevent mission changes from having a great effect on hardware design, resulting in costly changes. Late in the control programer development, the requirement for a high percentage of the real-time ground commands was deleted by ground control. The number of ground commands initially was 38. If this number could have been controlled and held to 31 in the initial design, the ground commands could have been initiated by direct relay closures in the radio command communications equipment, and the radio command controller unit of the control programer would have had a much simpler design.

2. Schedule plans or other acceptable alternate plans should be established early in the program to provide schedule relief when required. The production hardware delivery date for the control programer was originally within 6 months of the contract authorization date. The delivery date did not allow sufficient time to deliver a product commensurate with the high Apollo reliability standards. An alternate schedule plan was established in which the Apollo test organization used a prototype test article control programer to provide spacecraft switching during spacecraft 009 testing at the prime contractor facility. The point to be considered is that the alternate schedule plan, if required, should be established early enough to allow the subsystem supplier time to evaluate the breadboard properly, to develop and test the prototype properly, and to incorporate improvements from these developments into the production units.

3. General-purpose test equipment that is as simple as possible should be used for research and development hardware of low production quantities. The use of simple test equipment would allow changes in the flight hardware design without greatly affecting the test equipment design. If a vendor is going to build only three or four units of an end-item, it would be well to apply the manpower to actual testing of the finished production items rather than to use the manpower in attempts to further improve and verify the automated test equipment in preparation for end-item testing.

Lyndon B. Johnson Space Center
National Aeronautics and Space Administration
Houston, Texas, January 14, 1975
914-50-30-01-72