General Disclaimer

One or more of the Following Statements may affect this Document

- This document has been reproduced from the best copy furnished by the organizational source. It is being released in the interest of making available as much information as possible.

- This document may contain data, which exceeds the sheet parameters. It was furnished in this condition by the organizational source and is the best copy available.

- This document may contain tone-on-tone or color graphs, charts and/or pictures, which have been reproduced in black and white.

- This document is paginated as submitted by the original source.

- Portions of this document are not fully legible due to the historical nature of some of the material. However, it is the best reproduction available from the original submission.

Produced by the NASA Center for Aerospace Information (CASI)

NATIONAL AERONAUTICS AND SPACE ADMINISTRATION

NASA CR-
141546

(NASA-CR-141546) HEAT TRANSFER PHASE CHANGE PAINT TESTS OF 0.0175-SCALE MODELS (NCS. 21-0 AND 46-0) OF THE ROCKWELL INTERNATIONAL SPACE SHUTTLE ORBITER IN THE AEDC TUNNEL B HYPERSONIC WIND TUNNEL (TEST OH25A) N75-28109

G3/18 Unclas 31382

AUG 1975
RECEIVED
NASA STI FACILITY
INPUT BRANCH

SPACE SHUTTLE

AEROTHERMODYNAMIC DATA REPORT

JOHNSON SPACE CENTER

HOUSTON, TEXAS

DATA MANagement services

SPACE DIVISION CHRYSLER CORPORATION

July, 1975

DMS-DR-2252
NASA-CR-141,546

HEAT TRANSFER PHASE CHANGE PAINT TESTS OF 0.0175-SCALE MODELS (NOS. 21-0 AND 46-0) OF THE ROCKWELL INTERNATIONAL SPACE SHUTTLE ORBITER IN THE AEDC TUNNEL B HYPERSONIC WIND TUNNEL (TEST OH25A)

By

W. H. Dye
Shuttle Aero Sciences
Rockwell International Space Division

Prepared under NASA Contract Number NAS9-13247

By

Data Management Services
Chrysler Corporation Space Division
New Orleans, La. 70189

for

Engineering Analysis Divsion

Johnson Space Center
National Aeronautics and Space Administration
Houston, Texas

WIND TUNNEL SPECIFICS:

Test Number: AEDC VKF B V41B 83A
NASA Series Number: OH25A
Model Number: 21-0 and 46-0
Test Dates: 21 August 1974
Occupancy Hours: 8

FACILITY COORDINATOR:

L. L. Trimmer
VKF-SH
ARO, Inc.
Arnold Air Force Station, Tenn 37389

Phone: (615) 455-2611 x7377

AERODYNAMICS ANALYSIS ENGINEER:

C. Craig
Mail Code AC78
Rockwell International
Space Division
12214 Lakewood Blvd.
Downey, Ca. 90241

Phone: (213) 922-1558

PROJECT ENGINEERS:

W. H. Dye
Mail Code AC07
Rockwell International
Space Division
12214 Lakewood Blvd.
Downey, Ca. 90241

Phone: (213) 922-2849

C. E. Kawl
W. R. Martindale
VKF-ADP
ARO, Inc.
Arnold Air Force Station, Tenn 37389

Phone: (615) 455-2611 x7215

DATA MANAGEMENT SERVICES:

Prepared by: Liaison--D. A. Sarver
Operations--Maurice Moser, Jr.

Reviewed by: G. G. McDonald, J. L. Glynn

Approved: N. D. Kemp, Manager
Data Management Services

Concurrence: J. G. Swider, Manager
Flight Technology Branch

Chrysler Corporation Space Division assumes no responsibility for the data presented other than display characteristics.

HEAT TRANSFER PHASE CHANGE PAINT TESTS OF 0.0175-SCALE MODELS (NOS. 21-0 AND 46-0) OF THE ROCKWELL INTERNATIONAL SPACE SHUTTLE ORBITER IN THE AEDC TUNNEL B HYPERSONIC WIND TUNNEL (TEST OH25A)

By

W. H. Dye, Rockwell International Space Division

ABSTRACT

Tests were conducted in the AEDC-VKF Hypersonic Wind Tunnel (B) using various truncated space shuttle Orbiter configurations in an attempt to establish the optimum model size for later tests examining body shock-wing leading edge interference effects. The tests were conducted at Mach number 8 using the phase change paint technique. A test description, tabulated data, and tracings of isotherms made from photographs taken during the test are presented.

(THIS PAGE INTENTIONALLY LEFT BLANK)

TABLE OF CONTENTS

	Page
ABSTRACT	iii
INDEX OF FIGURES	2
INTRODUCTION	3
NOMENCLATURE	4
TEST CONFIGURATIONS INVESTIGATED	7
TEST FACILITY DESCRIPTION	8
TEST PROCEDURE	9
DATA REDUCTION	11
RESULTS AND DISCUSSION	13
REFERENCES	15
TABLES	
I. TEST CONDITIONS	16
II. TEST SUMMARY	17
III. MODEL DIMENSIONAL DATA	18
APPENDIX	38
TABULATED DATA AND ISOTHERM CONTOURS	

INDEX OF FIGURES

Figure		Title	Page
1.		Axis systems.	26
2.		Model sketches.	
	a.	General Orbiter Configuration	27
	b.	Configuration No. 1 Planform	28
	c.	Configuration No. 2 Planform	29
	d.	Configuration No. 3 Planform	30
	e.	Configuration No. 4 Planform	31
	f.	Configuration No. 5 Planform	32
	g.	Configuration No. 6 Planform	33
3.		Model grid pattern.	
	a.	Orbiter at $\alpha = 30°$	34
	b.	Orbiter at $\alpha = 40°$	35
	c.	Semispan wing at $\alpha = 30°$	36
	d.	Semispan wing at $\alpha = 40°$	37

INTRODUCTION

The work reported herein was sponsored by the Johnson Space Center (NASA-JSC) for Rockwell International Space Division, Downey, California, under Program Element 921-E. The work was done at the Arnold Engineering Development Center (AEDC), AFSC, by ARO, Inc. (a subsidiary of Sverdrup and Parcel and Associates, Inc.), contract operator of AEDC, Arnold Air Force Station, Tennessee. The ARO Project No. was V41B 83A.

The tests were conducted in Hypersonic Wind Tunnel (B) at Mach number 8 on August 21, 1974. The test objective was to investigate planform area reduction crossflow effects on Vehicle 3 Space Shuttle Orbiter configurations to establish the optimum model size for later tests examining body shock-wing leading edge interference effects. Data were obtained using the phase change paint technique.

Most of the information presented in this report was extracted from the AEDC post-test report on this test (Reference 1).

NOMENCLATURE

Symbol	Computer Symbol	Description
C_p	C	specific heat of the model material - BTU/lb-°F
g		acceleration due to gravity, 32.17 ft/sec^2
h	H(TO)	heat transfer coefficient based on $T_{AW} = T_o$
	H(.9TO)	heat transfer coefficient based on $T_{AW} = 0.9\ T_o$
	H(.867 TO)	heat transfer coefficient based on $T_{AW} = 0.867\ T_o$
h_s	HREF	reference heat-transfer coefficient based on Fay-Riddell Theory, BTU/ft^2-sec.-°R
M_∞	MACH NO.	free stream Mach no.
N_r	R	reference nose radius (.0175 ft)
P_∞	P-INF	free stream static pressure, psia
P_r		Prandtl number
P_o	PO	tunnel stilling chamber pressure, psia
P_1, P_2		defined in context
q_o	Q-INF	free-stream dynamic pressure, psia
R		universal gas constant, ft-lb$_f$/lb$_m$-°R
Re/ft	RE/FT	free stream unit Reynolds number, ft^{-1}
	ROLL-MODEL	model roll angle-deg.
	ST(TO)	Stanton number based on T_o:

$$ST(TO) = \frac{H(TO)}{\rho_\infty V_\infty [.2235 + 1.35\times10^{-4}(T_o + 560)]\times 32.17}$$

NOMENCLATURE (Continued)

Symbol	Computer Symbol	Description
	STREF	reference Stanton number: $ST(TO) = \frac{HREF}{\rho_\infty V_\infty[.2235 + 1.35x10^{-4}(T_0 + 560)]x32.17}$
T_{aw}		adiabatic wall temperature, °F
$\bar{T}$	TBAR	$\frac{T_{pc} - T_{IN}}{T_{aw} - T_{IN}}$
T_{IN}		initial model temperature, °F
T_∞	T-INF	free stream static temperature-°R
T_{pc}	TPC	paint melt temperature, °F
T_0	TO	tunnel stilling chamber temperature, °R
t	TIME	time from start of model injection, sec.
Δt	DEL TIME	time model exposed to airstream, sec.
V_e		velocity at edge of the boundary layer, ft/sec.
V_∞	V-INF	free stream velocity, ft/sec.
$\sqrt{\rho k C_p}$	SQUARE ROOT	(RHO*C*K)
	GREEK	
α	ALPHA-MODEL	model angle of attack, deg.
	ALPHA-PREBEND	sting prebend angle, deg.
	ALPHA-SECTOR	tunnel sector pitch angle-deg.
	YAW	model yaw angle
γ		ratio of specific heats of air
k	K	model thermoconductivity, BTU/ft-sec-°F
β		defined in context

NOMENCLATURE (Concluded)

Symbol	Computer Symbol	Description
μ_∞	MU-INF	free stream viscosity, lb-sec/ft^2
μ_s		stagnation air viscosity, lb-sec/ft^2
μ_w		air viscosity along model wall (lb_m/ft-sec)
ρ	RHO	model material density-lb_m/ft^3
ρ_w		air density along model wall-lb_m/ft^3
ρ_s		stagnation air density lb_m/ft^3
ρ_∞	RHO-INF	free stream air density, slug/ft^3

TEST CONFIGURATIONS INVESTIGATED

The five test articles were originally cast as 0.0175-scale models of the Rockwell International Space Shuttle Orbiter, with configuration control defined by Rockwell drawing VL70-000139. The models were cast in one piece around an epoxy-fiberglass sleeve using Grumman proprietary material G.

Five of the original models were modified by removal of varying amounts of planform area, according to the following table:

Test Configuration Number	Model	Description
1	Orbiter	full Orbiter planform--unmodified
2	40 percent	left wing removed at wing-glove radius (40 percent semispan)
3	Body flush	left wing removed flush with wing-fuselage junction
4	Leading edge	left wing removed from wing-glove radius (35 percent semispan) tapered to fuselage at cargo bay door-vertical stabilizer junction. Aft fuselage removed perpendicular to centerline. Aft portion of right wing removed parallel to and 3 in. aft of leading edge from 30% semispan to 80% semispan.
5	Transition	left wing and aft fuselage removed diagonally from left wing leading edge (35 percent semispan) to right wing-fuselage junction
6	Semispan wing	truncated left wing (from 40% semispan to wing tip) with aft wing portion removed 3 inches from and parallel to leading edge

Planform area sketches of the six model configurations are given in Figures 2b through g, respectively.

TEST FACILITY DESCRIPTION

Tunnel B is a continuous, closed-circuit, variable density wind tunnel with an axisymmetric contoured nozzle and a 50-in.-diam. test section. The tunnel can be operated at a nominal Mach number of 6 or 8 at stagnation pressures from 20 to 300 and 50 to 900 psia, respectively, at stagnation temperatures up to 1350°R. The model can be injected into the tunnel for a test run and then retracted for model cooling or model changes without interrupting the tunnel flow. A description of the tunnel may be found in reference 2.

TEST PROCEDURE

Tempilaq®, a fusible coating that changes phase from an opaque solid to a transparent liquid at temperatures specified by the manufacturer, was used to indicate the location of isotherms on the model surface. The paints used had melting temperatures of 131, 225, 250, 300, 350, 400, and 450°F.

A Beattie-Coleman Varitron® 70 mm sequence camera was used to record the progression of isotherms on the windward surface, as a function of time, during each test run. The camera was located on the top of the wind tunnel and photographed the bottom surface of the Orbiter models. The camera was operated at a nominal rate of 1 frame/sec. Kodak TRI-X Pan® black-and-white film was used.

Dual television monitors were used throughout the test to further record the effects of planform area reduction on heating rates and to facilitate on-line cross-referencing.

Prior to each test run, the model was cleaned with a solvent, spray-painted with the phase-change coating, and allowed to reach isothermal conditions. The model was then injected into the wind tunnel for about 30 seconds, during which time the progression of the isotherms, indicated by the demarcation between melted and unmelted coating, was continuously photographed. The model was then retracted from the wind tunnel and the cycle repeated for the next run. The model temperature was measured prior to each run using a thermocouple probe.

TEST PROCEDURE (Concluded)

The tests were conducted at the following nominal conditions:

Mach No.	PO,psia	TO,°R	HREF,$[\frac{BTU}{ft^2\text{-}sec\text{-}°R}]$	RE/FTx10^{-6}
7.91	110	1260	0.0178	0.55
7.98	430	1300	0.0348	2.00
8.00	860	1350	0.0491	3.72

DATA REDUCTION

Thin film heat transfer coefficients were calculated for each melt line at which photographs were taken. The coefficients were calculated assuming three different recovery factors:

$$\frac{T_{aw}}{T_o} = 0.867,\ 0.90,\ \text{and}\ 1.0$$

The following calculations were then performed to obtain thin film coefficients:

$$\bar{T} = \frac{T_{pc} - T_{IN}}{T_{aw} - T_{IN}}$$

$$T_{aw} = \left(\frac{T_{aw}}{T_o}\right) \times T_o$$

$$h = \frac{\beta \sqrt{k\rho C_p}}{\sqrt{t}}$$

where the flow parameter β results from iterative solution of:

$$1 - \bar{T} = e^{\beta^2} (1 - \text{erf}\ \beta)$$

Theoretical thin film heat transfer coefficients and stagnation point heating rates were calculated using the equations given below:

$$h_s = (.768)(C_p)(P_r^{-.6})(\rho_w \mu_w)^{.1}(\rho_s \mu_s)^{.4}\sqrt{\frac{dVe}{dx}}$$

where

$P_r = \frac{\mu C_p}{k}$ (μ, C_p and k for air)

$\frac{dVe}{dx}$ = The streamwise velocity gradient along the model surface

and

$$\frac{dVe}{dx} = \frac{1}{N_r}\sqrt{2\ Rg\ T_o\ (1 - \frac{1}{P_1 P_2})}$$

N_r = Nose radius, 0.0175 foot radius (1 foot full scale)

$$P_1 = \left[\frac{\gamma + 1}{2} M_\infty{}^2\right]^{\frac{\gamma}{\gamma-1}}$$

$$P_2 = \left[\left(\frac{\gamma + 1}{2\gamma M_\infty{}^2 - (\gamma - 1)}\right)\right]^{\frac{\gamma}{\gamma-1}}$$

Melt lines have been traced from selected photographs taken during the test and are presented at the back of this report. Each melt line on the tracings is identified by a number corresponding to a picture number. Thin film coefficients and free stream data corresponding to each picture number are presented on pages following each tracing. Station numbers of melt lines on each tracing can be determined using sketches of grid patterns in Figure 3 corresponding to each model attitude that was tested.

RESULTS AND DISCUSSION

Uncertainties of the basic tunnel parameters were estimated from repeat calibrations of the PO and TO instruments and from the repeatability and uniformity of the tunnel flow during calibrations. The parameters PO, TO, and MACH NO. with their uncertainties were then used to compute the uncertainties in the other parameters dependent on these by means of the Taylor series method of error propagation.

Uncertainty, percent			
MACH NO.	PO	TO	RE/FT
± 0.3	± 0.5	± 0.5	± 1.2

An estimate of the data precision of phase change paint data is hampered by the fact that an observer must determine the location of the melt line. For this analysis, only uncertainties attributable to the measured parameters are considered. The parameters needed for the solution of the equation for the heat-transfer coefficient, h, are T_{pc}, T_i, T_{aw}, $\sqrt{\rho k C_p}$, and Δt. The table below summarizes the nominal uncertainties in these specific parameters.

Parameter	Uncertainty (+)
Δt	± 1.0
$\sqrt{\rho k C_p}$	±10.0
T_i	± 0.5
T_o (T_{aw})	± 1.0
T_{pc}	± 0.5

It should be remembered that the above uncertainties in T_{aw} and T_{pc} only reflect nominal measurement uncertainties. As previously mentioned, the interpretation of when phase change occurs (i.e., T_{pc}) is a matter of observer experience, and the "correct" assumption of what should be used for T_{aw} also requires engineering judgment. However, combining the above measurement uncertainties with the corresponding error sensitivity factor (derived by using the equation for the heat-transfer coefficient, h, and taking the square root of the sum of the squares) yields the following:

for $T_{pc} \leqq 200°F$, h uncertainty $\simeq \pm 13$ percent

for $T_{pc} > 200°F$, h uncertainty $\simeq \pm 11$ percent.

REFERENCES

1. Test Data From the NASA/Rockwell International Space Shuttle Test (OH-25A) Conducted in the AEDC-VKF Tunnel B, by C. E. Kawl and W. R. Martindale, ARO/Arnold Engineering Development Center, August 1974.

2. Test Facilities Handbook (Tenth Edition). "von Karman Gas Dynamics Facility, Vol. 3." Arnold Engineering Development Center, May, 1974.

3. Pretest Report for Phase Change Paint Tests on 0.0175-Scale Models of The Rockwell International Space Shuttle In The AEDC B Hypersonic Wind Tunnel-OH25A&B, by W. H. Dye and J. W. Cummings, Rockwell International Space Division Report SD-74-SH-0253, July 1974.

TABLE I.
TEST CONDITIONS

TEST: OH25A

Mach Number	HREF BTU/ft^2-sec.°R	Reynolds Number (per foot)	Stagnation Pressure (pounds/sq. inch)	Stagnation Temp. (degrees Rankine)
7.91	0.0178	0.5×10^6	110	1260
7.98	0.0348	2.0×10^6	430	1300
8.00	0.0491	3.7×10^6	860	1350

BALANCE UTILIZED: None

TABLE II. TEST SUMMARY
TEST OH25A MACH NO. = 8

Configuration Description	Config. No.	α	Group Numbers for Thermal Mapping Tests: Low T_{pc} Unit Reynolds No. 0.5	2.0	3.7	Intermediate T_{pc} Unit Reynolds No. 0.5	2.0	3.7	High T_{pc} Unit Reynolds No. 0.5	2.0	3.7	Group Nos. For Oil Flow Visualization Re/ft = 0.5 First Run	Repeat Run
Orbiter	1	30	5	46	65		40		1	41	69	21	31
———	1	40	15	52	79			75	9	49	73	22	32
Orbiter with 40% wing	2	30	6	55	71				2	42	66	23	33
———	2	40	17	59	81				10	57	77	24	34
Orbiter with body flush	3	30	7	48					3	43		25	
———	3	40	18	54					12	51		26	
Orbiter with left wing LE	4	30	8	47	70				4	44	67	27	
———	4	40	19	53	82			78	13	50	78	28	
Transition Orbiter	5	30	14	56	72				11	45	68	29	
———	5	40	20	60	80				16	58	76	30	
Semispan Wing	6	30		64					37	63		38	
———	6	40	35	62					36	61		39	

TABLE III MODEL DIMENSIONAL DATA

MODEL COMPONENT : BODY - B_{17}

GENERAL DESCRIPTION : Lightweight orbiter fuselage, design configuration 3

MODEL SCALE: 0.0175

DRAWING NUMBER : VL70-000139

DIMENSIONS :	FULL SCALE	MODEL SCALE
Length In.	1290.3	22.580
Max Width , In.	267.6	4.683
Max Depth . In.	244.5	4.279
Fineness Ratio	4.822	4.822
Area -- Ft^2		
Max. Cross-Sectional	386.67	0.1184
Planform		
Wetted		
Base		

TABLE III (CONT'D)

MODEL COMPONENT : CANOPY - C_7

GENERAL DESCRIPTION : Design configuration 3

MODEL SCALE: 0.0175

DRAWING NUMBER : VL70-000139

DIMENSIONS :	FULL SCALE	MODEL SCALE
Length (X_o = 433 to X_o=578), In. F.S.	145.00	2.538
Max Width		
Max Depth		
Fineness Ratio		
Area		
Max. Cross-Sectional		
Planform		
Wetted		
Base		

TABLE III (CONT'D)

MODEL COMPONENT: ELEVON - E_{22}

GENERAL DESCRIPTION: Design configuration 3, right wing only.

MODEL SCALE: 0.0175

DRAWING NUMBER: VL70-000139

DIMENSIONS:	FULL-SCALE	MODEL SCALE
Area - Ft^2	205.52	0.063
Span (equivalent) - In.	353.34	6.183
Inb'd equivalent chord - In.	114.78	2.009
Outb'd equivalent chord - In.	55.00	0.693
Ratio movable surface chord/ total surface chord		
At Inb'd equiv. chord	0.208	0.208
At Outb'd equiv. chord	0.400	0.400
Sweep Back Angles, degrees		
Leading Edge	0.00	0.00
Tailing Edge	- 10.24	- 10.24
Hingeline	0.00	0.00
Area Moment (Product of Area & $\bar{c}$) ~~Normal to hinge line~~ Ft^3	1548.07	0.077

TABLE III (CONT'D)

MODEL COMPONENT : BODY FLAP - F_5

GENERAL DESCRIPTION : Design configuration 3

MODEL SCALE: 0.0175

DRAWING NUMBER : VL70-000139

DIMENSIONS :	FULL SCALE	MODEL SCALE
Length - In.	84.70	1.482
Max Width - In.	267.6	4.683
Max Depth		
Fineness Ratio		
Area - Ft^2		
Max. Cross-Sectional		
Planform	142.5	0.044
Wetted		
Base	38.100	0.012

TABLE III CONT'D)

MODEL COMPONENT : OMS POD - M_4

GENERAL DESCRIPTION : Design configuration 3, identical to M_3 except intersection with fuselage

MODEL SCALE: 0.0175

DRAWING NUMBER : VL70-000139

DIMENSIONS :	FULL SCALE	MODEL SCALE
Length - In.	346.0	6.055
Max Width - In.	108.0	1.890
Max Depth - In.	113.0	1.978
Fineness Ratio		
Area		
Max. Cross-Sectional		
Planform		
Wetted		
Base		

TABLE III (CONT'D)

MODEL COMPONENT: RUDDER - R_5

GENERAL DESCRIPTION: Design configurations 2A, 3 and 3A

MODEL SCALE : 0.0175

DRAWING NUMBER: VL70-000146A, -000095, --000139

DIMENSIONS:	FULL-SCALE	MODEL SCALE
Area - Ft^2	100.15	0.031
Span (equivalent) - In.	201.00	3.512
Inb'd equivalent chord - In.	91.585	1.603
Outb'd equivalent chord - In.	50.833	0.890
Ratio movable surface chord/ total surface chord		
At Inb'd equiv. chord	0.400	0.400
At Outb'd equiv. chord	0.400	0.400
Sweep Back Angles, degrees		
Leading Edge	34.83	34.83
Tailing Edge	26.25	26.25
Hingeline	34.83	34.83
Area Moment (Product of area & $\bar{c}$) ~~Normal to hingeline~~ Ft^3	610.92	0.0039
Mean aerodynamic chord, In.	73.2	1.281

TABLE III (CONT'D)

MODEL COMPONENT: VERTICAL - V_7

GENERAL DESCRIPTION: Centerline vertical tail, doublewedge airfoil with rounded leading edge.

MODEL SCALE: 0.0175

DRAWING NUMBER: VL70-000139

DIMENSIONS:	FULL SCALE	MODEL SCALE
TOTAL DATA		
Area (Theo) - Ft^2		
Planform	425.92	0.130
Span (Theo) - In.	315.72	3.160
Aspect Ratio	1.675	1.675
Rate of Taper	0.507	0.507
Taper Ratio	0.404	0.404
Sweep-Back Angles, Degrees.		
Leading Edge	45.000	45.000
Trailing Edge	26.249	26.249
0.25 Element Line	41.130	41.130
Chords:		
Root (Theo) WP	268.50	4.699
Tip (Theo) WP	108.47	1.898
MAC	199.81	3.497
Fus. Sta. of .25 MAC	1463.50	25.611
W.P. of .25 MAC	635.522	11.116
B.L. of .25 MAC	0.0	0.0
Airfoil Section		
Leading Wedge Angle - Deg.	10.00	10.00
Trailing Wedge Angle - Deg.	14.920	14.920
Leading Edge Radius	2.0	2.0
Void Area	13.17	13.17
Blanketed Area	0.0	0.0

TABLE III (CONL'D)

MODEL COMPONENT: WING-W 103

GENERAL DESCRIPTION: Design configuration 3

NOTE: Same planform as W_{87}, except dihedral at trailing edge.

MODEL SCALE: 0.0175

TEST NO. DWG. NO. VL70-000139

DIMENSIONS:	FULL-SCALE	MODEL SCALE
TOTAL DATA		
Area (Theo.) Ft^2		
Planform	2690.00	0.824
Span (Theo In.	936.68	16.392
Aspect Ratio	2.265	2.265
Rate of Taper	1.177	1.177
Taper Ratio	0.200	0.200
Dihedral Angle, degrees	3.500	3.500
Incidence Angle, degrees	3.000	3.000
Aerodynamic Twist, degrees	3.000	3.000
Sweep Back Angles, degrees		
Leading Edge	45.000	45.000
Trailing Edge	- 10.24	- 10.24
0.25 Element Line	35.209	35.209
Chords:		
Root (Theo) B.P.0.0.	689.24	12.063
Tip, (Theo) B.P.	137.85	2.412
MAC	474.81	8.309
Fus. Sta. of .25 MAC	1136.89	19.896
W.P. of .25 MAC	299.20	5.236
B.L. of .25 MAC	182.13	3.187
EXPOSED DATA		
Area (Theo) Ft^2	1752.29	0.537
Span, (Theo) In. BP108	720.68	12.612
Aspect Ratio	2.058	2.058
Taper Ratio	0.245	0.245
Chords		
Root BP108	562.40	9.842
Tip 1.00 $\frac{b}{2}$	137.85	2.412
MAC	393.03	6.878
Fus. Sta. of .25 MAC	1185.31	20.743
W.P. of .25 MAC	300.20	5.254
B.L. of .25 MAC	251.76	4.406
Airfoil Section (Rockwell Mod NASA) XXXX-64		
Root $\frac{b}{2}$ =	0.100	0.100
Tip $\frac{b}{2}$ =	0.120	0.120
Data for (1) of (2) Sides		
Leading Edge Cuff Planform Area Ft^2	120.33	0.037
Leading Edge Intersects Fus M. L. @ Sta	560.00	9.80
Leading Edge Intersects Wing @ Sta	1035.00	18.113

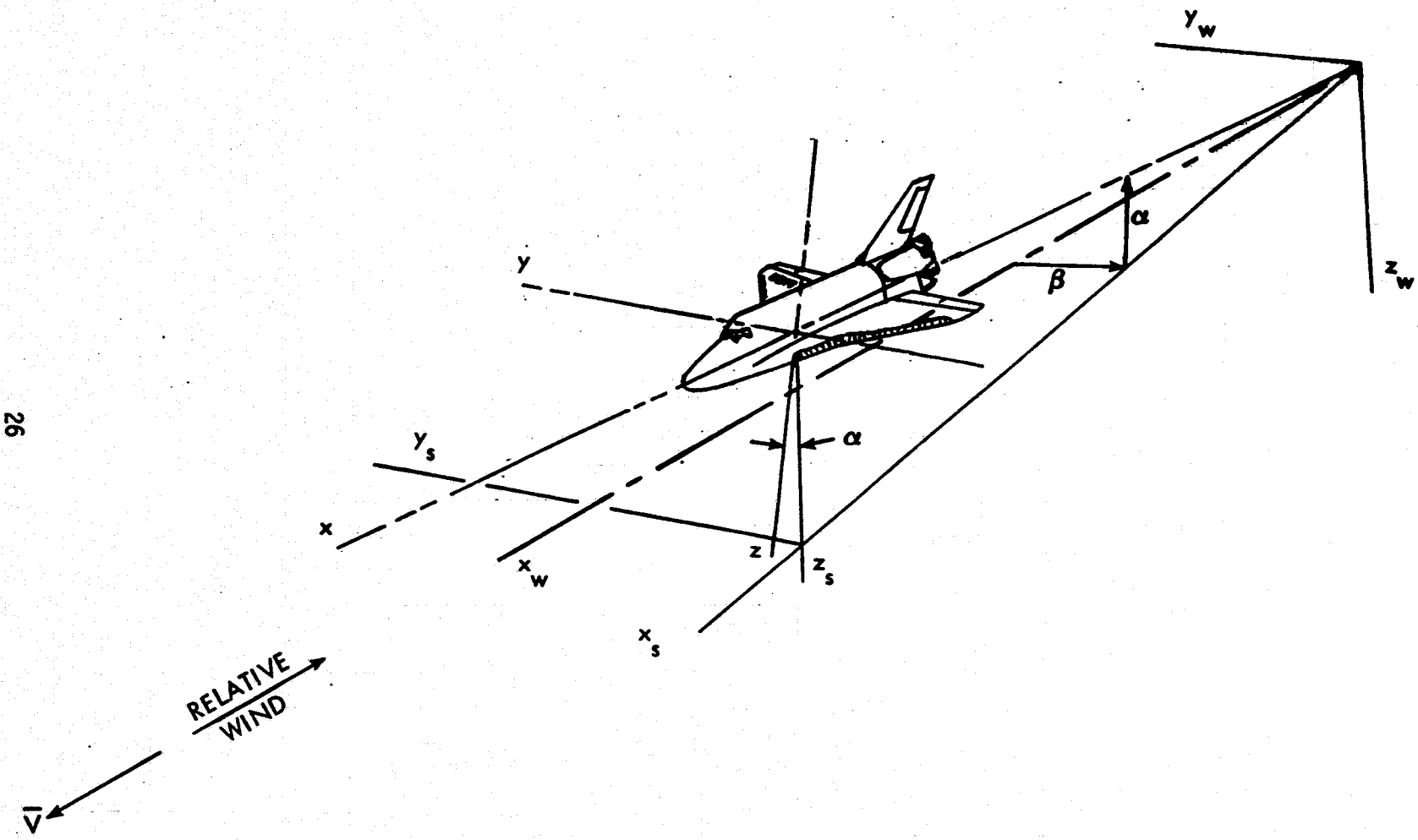

Figure 1. - Axis systems.

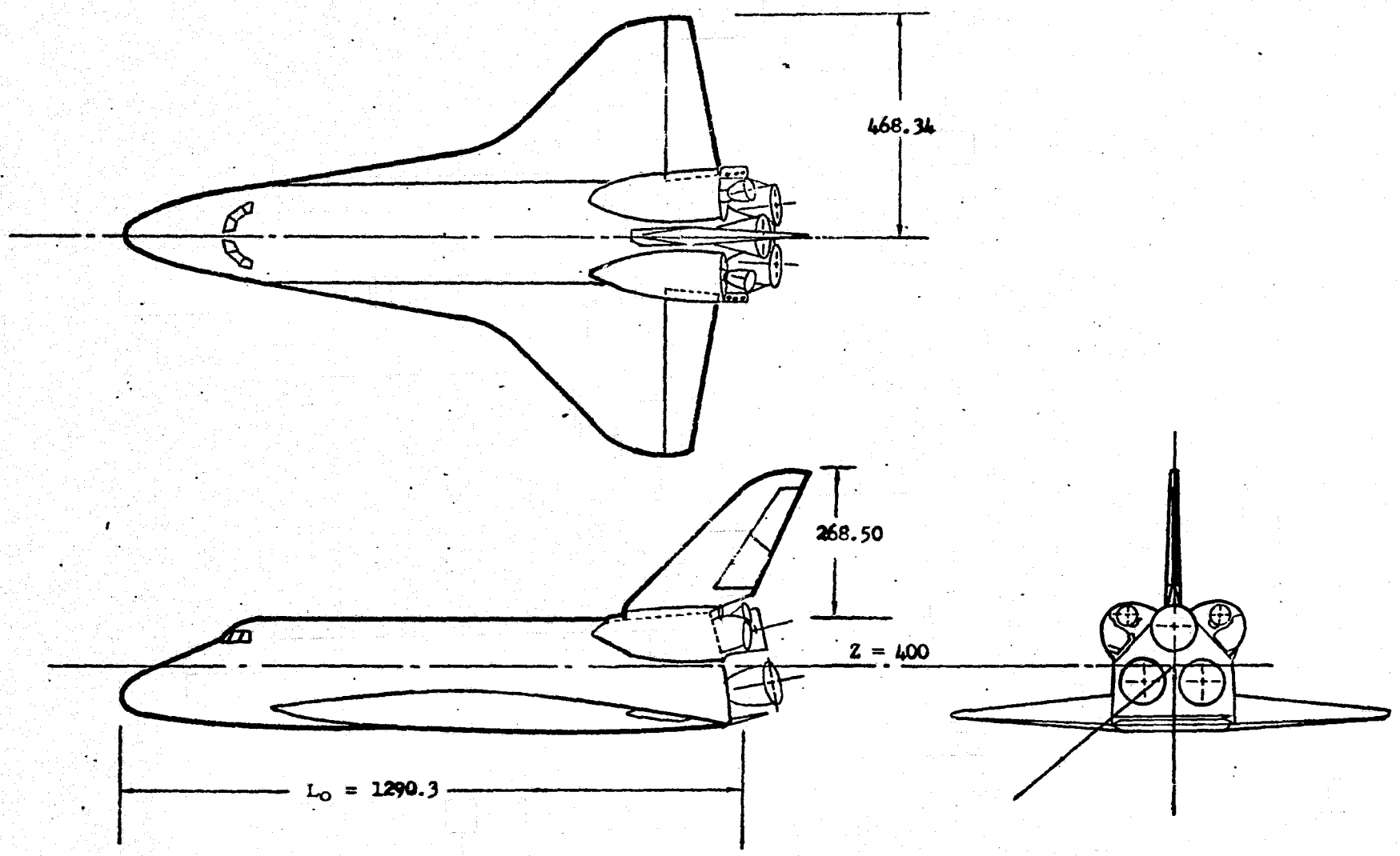

a. General Orbiter Configuration

Figure 2. - Model sketches.

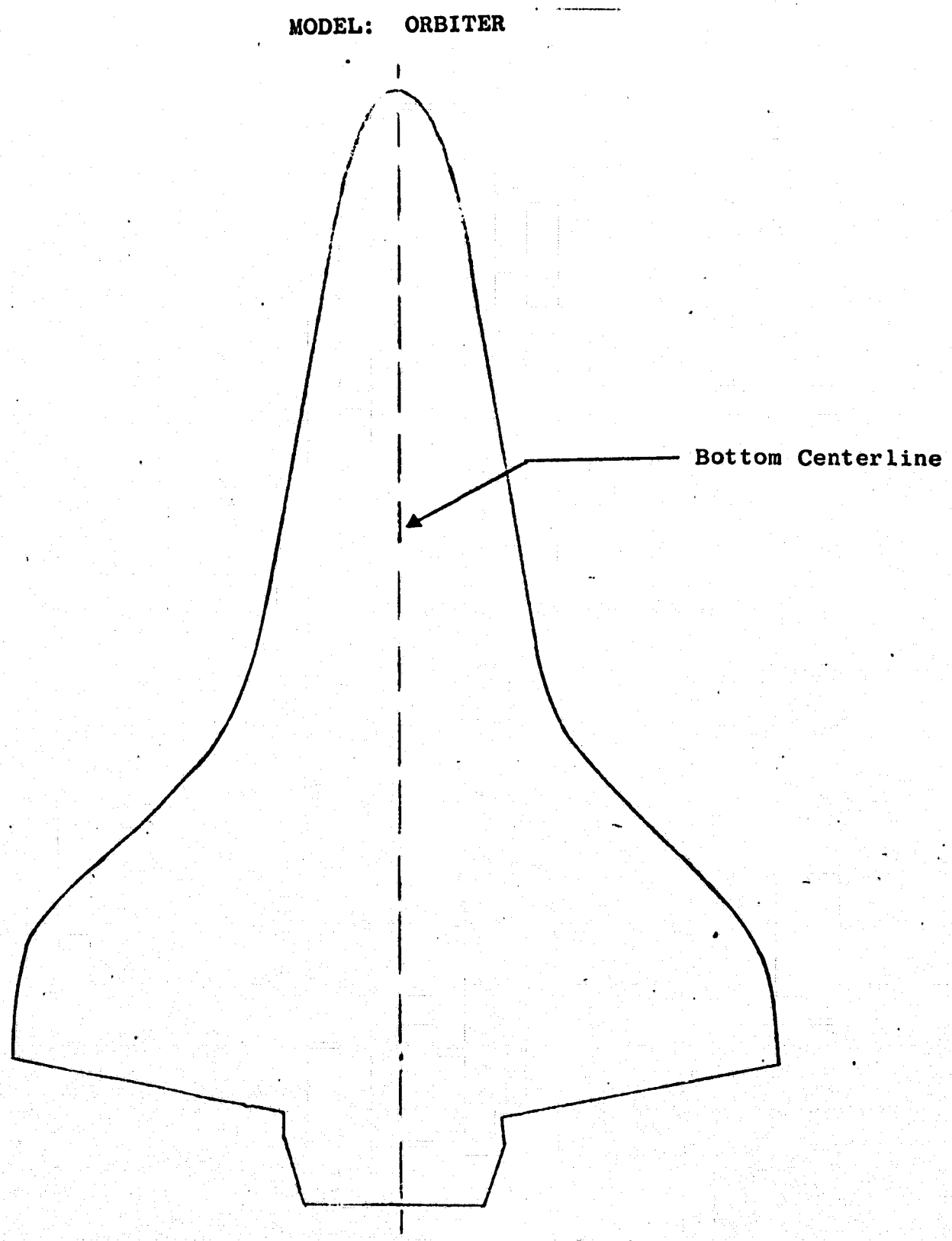

b. Test Configuration No. 1 Planform

Figure 2. - Continued.

MODEL: 40% WING

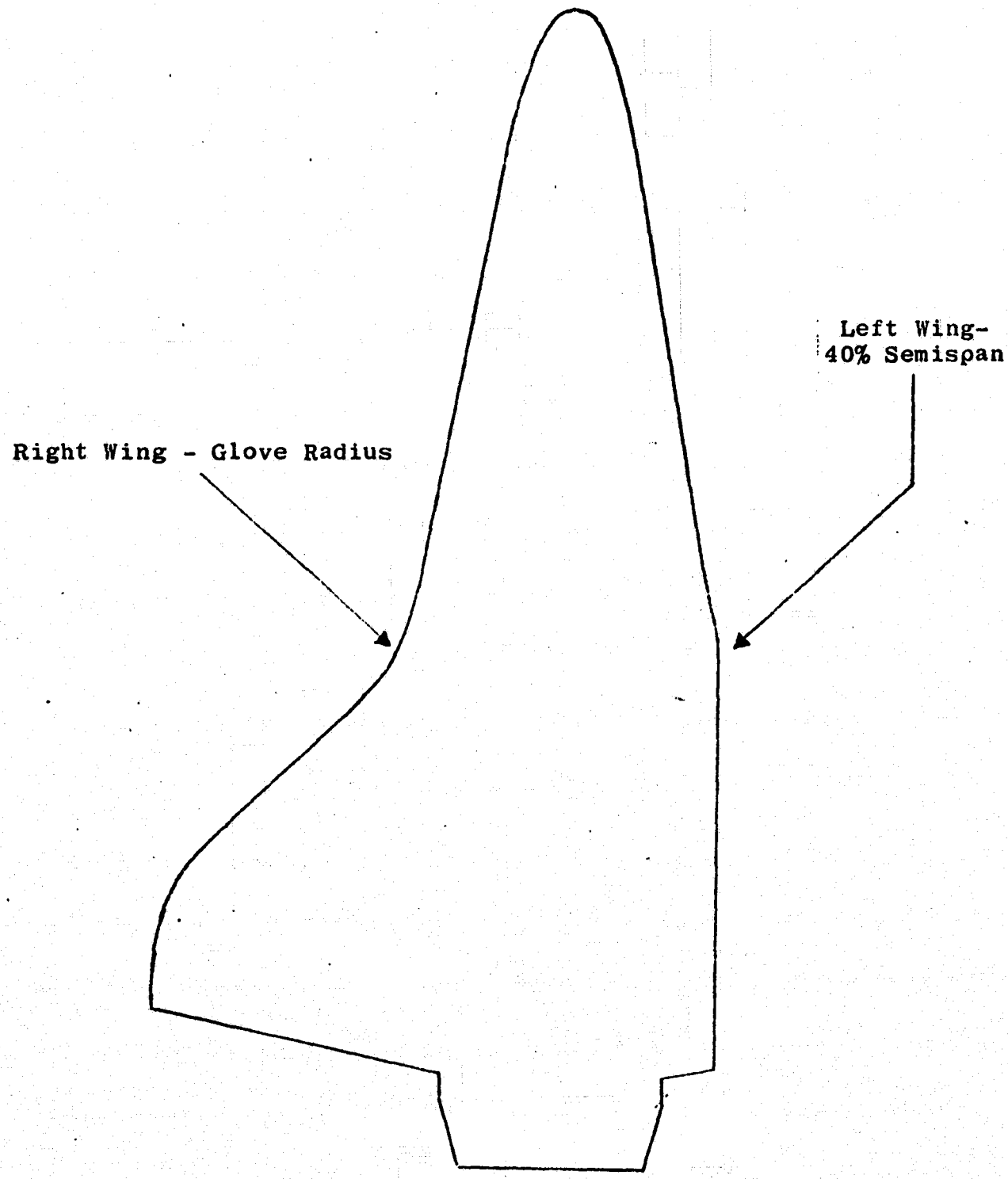

c. Test Configuration No. 2 Planform

Figure 2. - Continued.

MODEL: BODY FLUSH

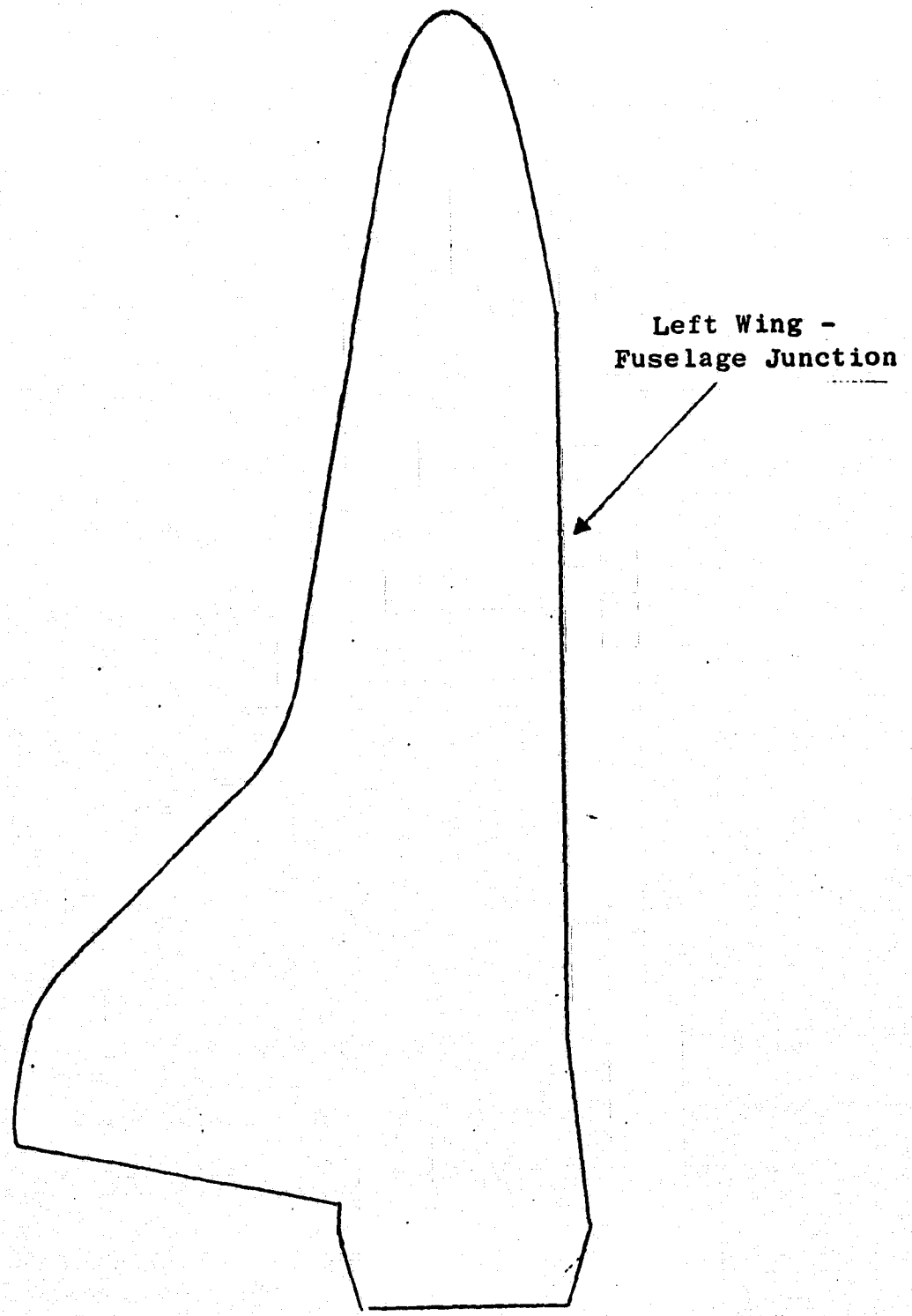

d. Test Configuration No. 3 Planform

Figure 2. - Continued.

MODEL: LEADING EDGE

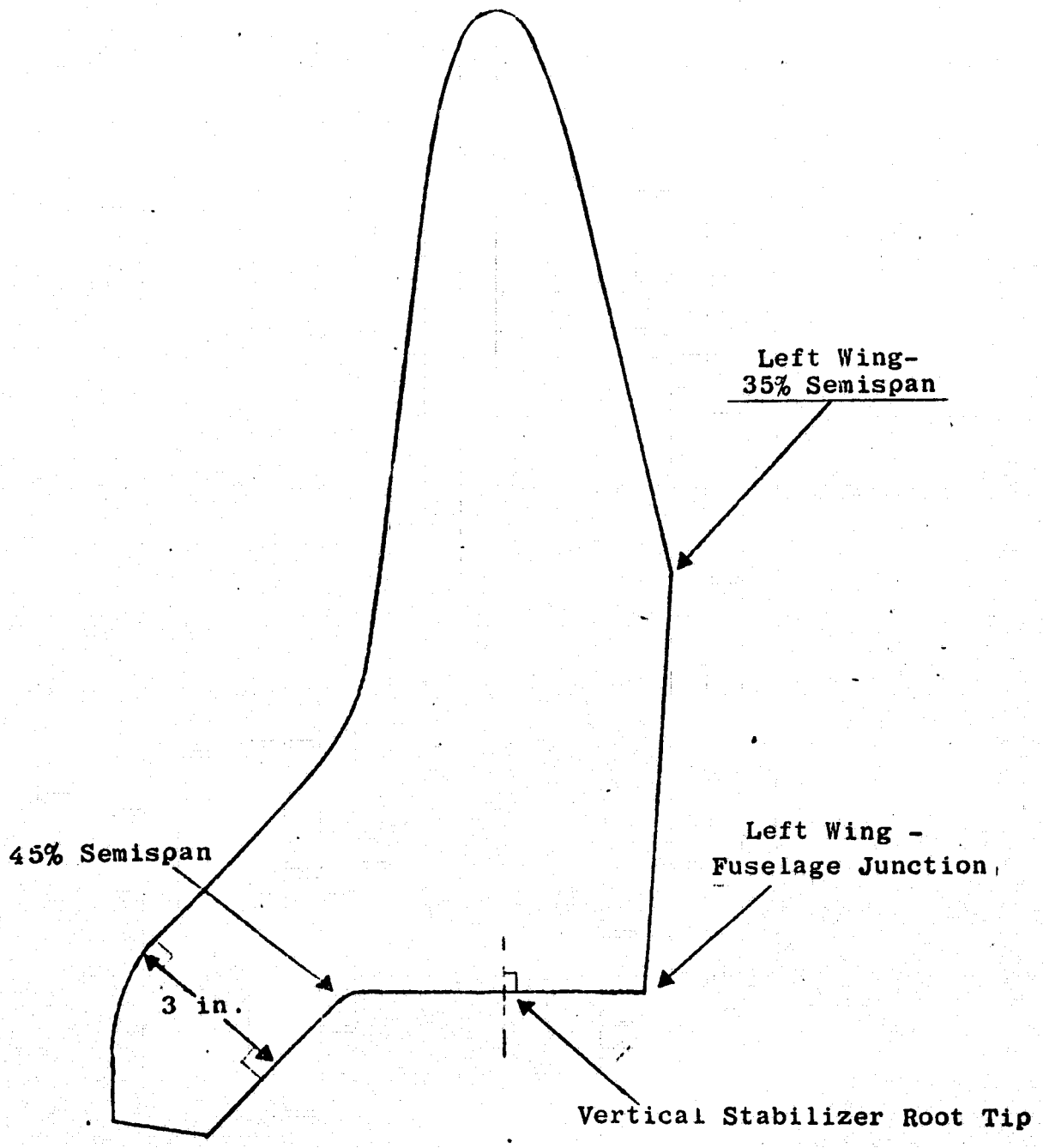

e. Test Configuration No. 4 Planform

Figure 2. - Continued.

MODEL: TRANSITION

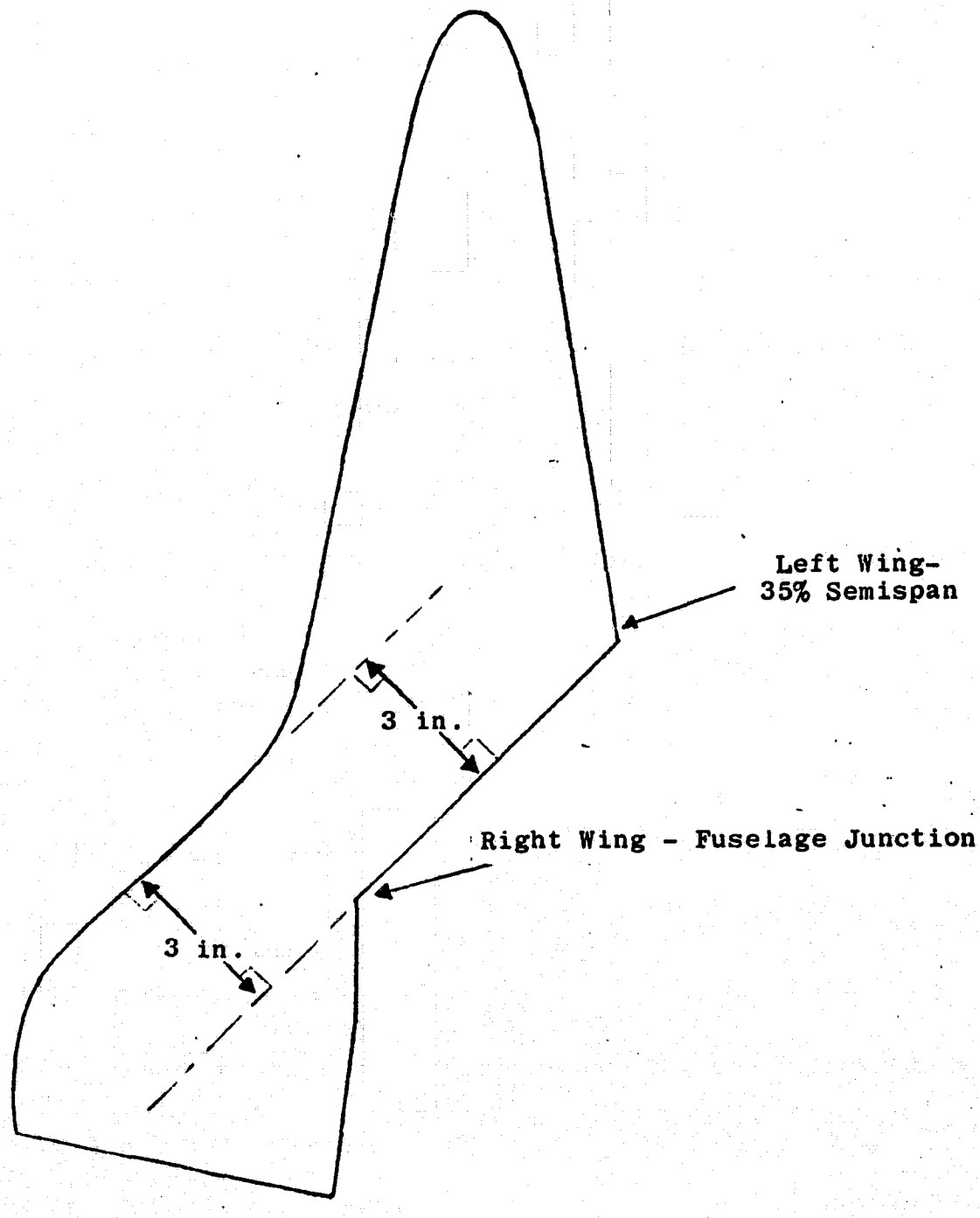

f. Test Configuration No. 5 Planform

Figure 2. - Continued.

MODEL: SEMISPAN WING

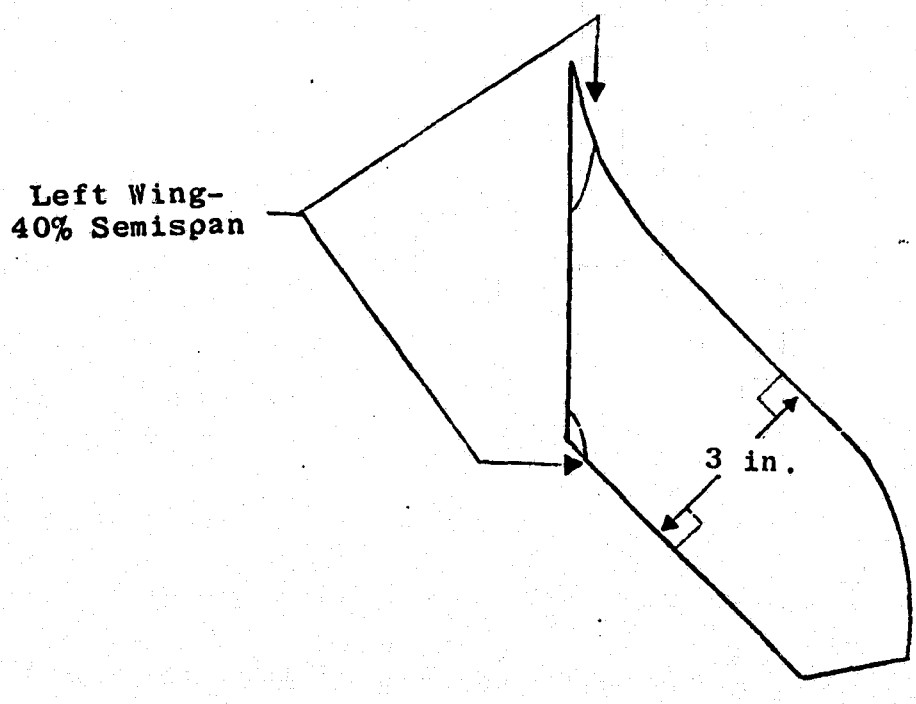

g. Test Configuration No. 6 Planform

Figure 2. - Concluded.

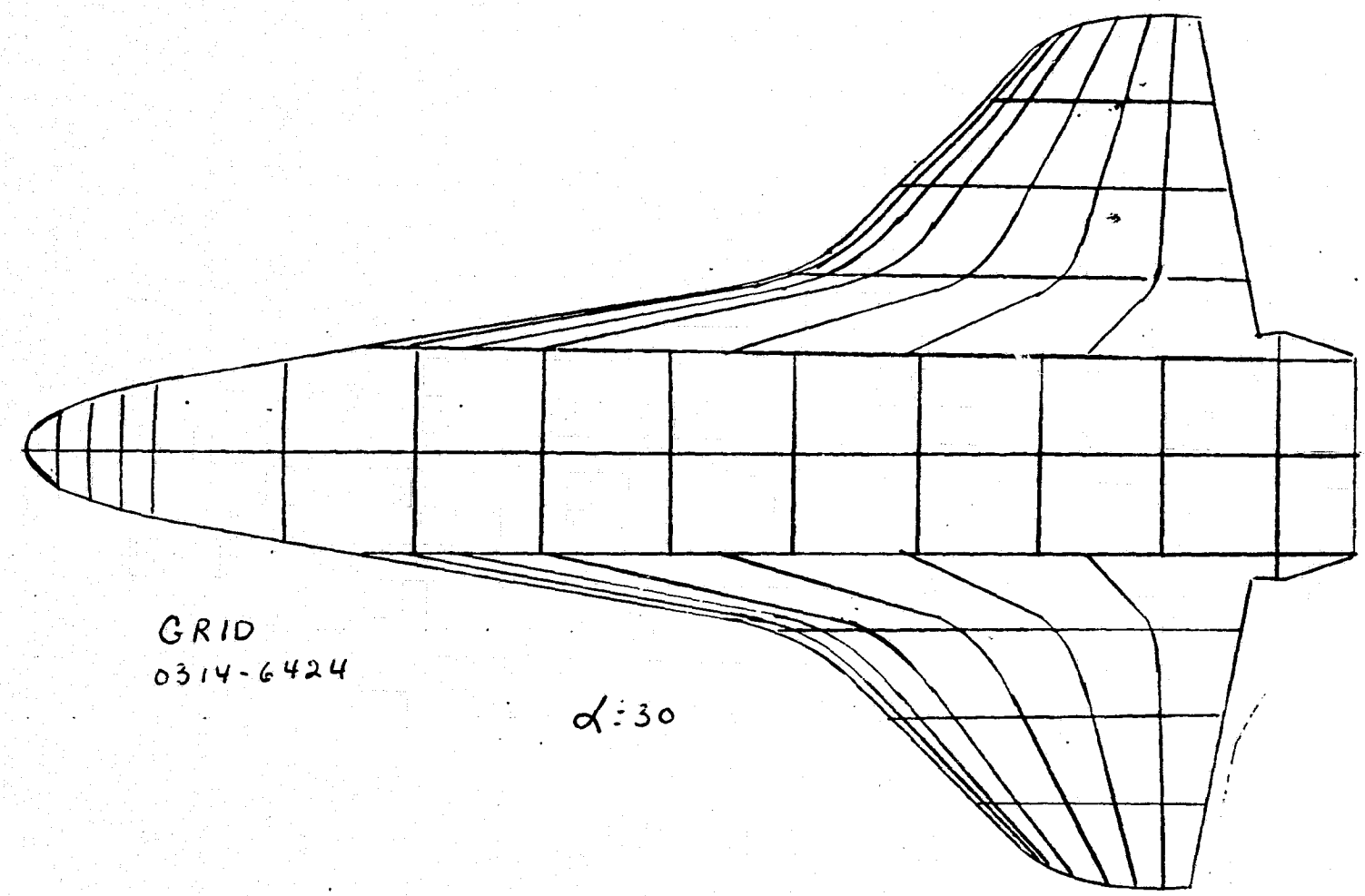

a. Orbiter at $\alpha = 30°$

Figure 3. - Model grid pattern.

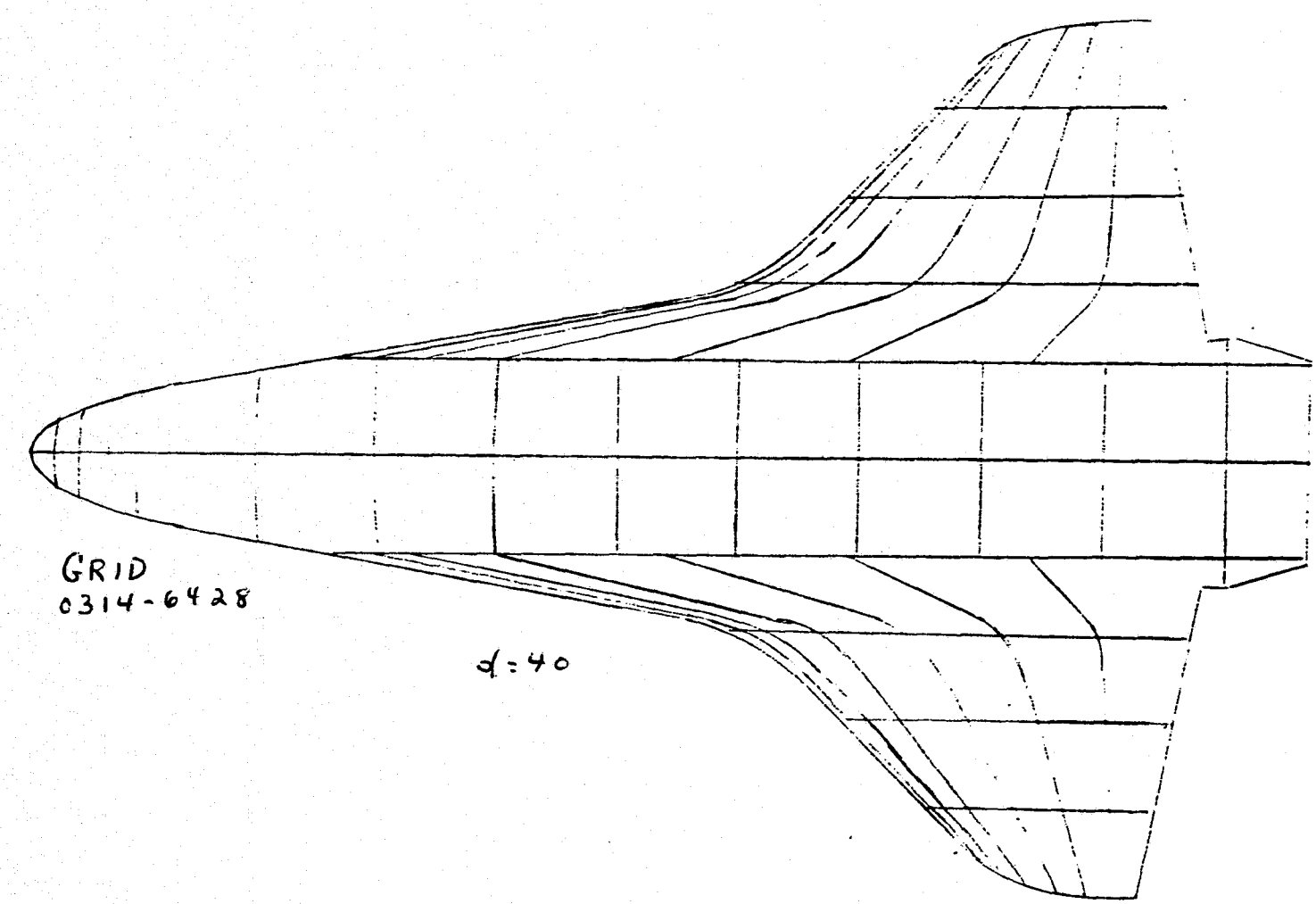

b. Orbiter at $\alpha = 40°$

Figure 3. - Continued.

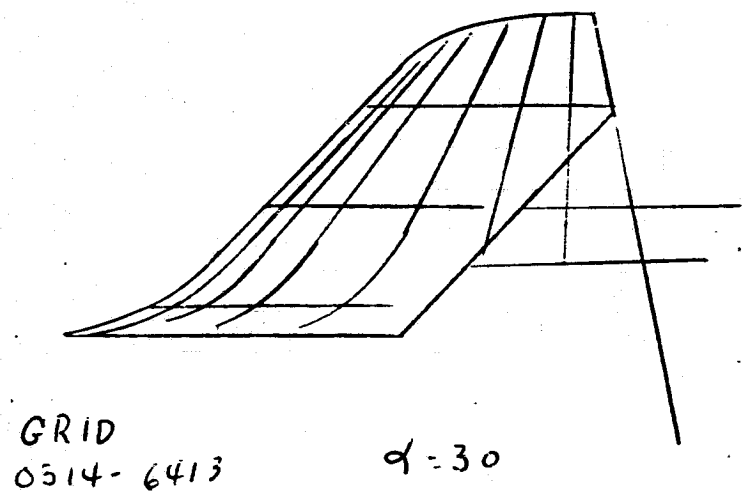

c. Semispan wing at $\alpha = 30°$

Figure 3. - Continued.

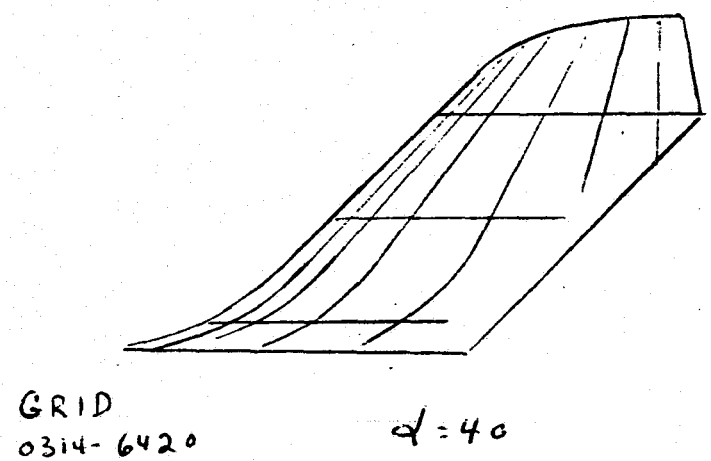

d. Semispan wing at $\alpha = 40°$

Figure 3. - Concluded.

APPENDIX

TABULATED DATA AND ISOTHERM CONTOURS

Note: Data are presented in order of increasing group number. Freestream conditions are given for oil flow visualization runs. No oil flow visualization photographs are presented.

GROUP 1

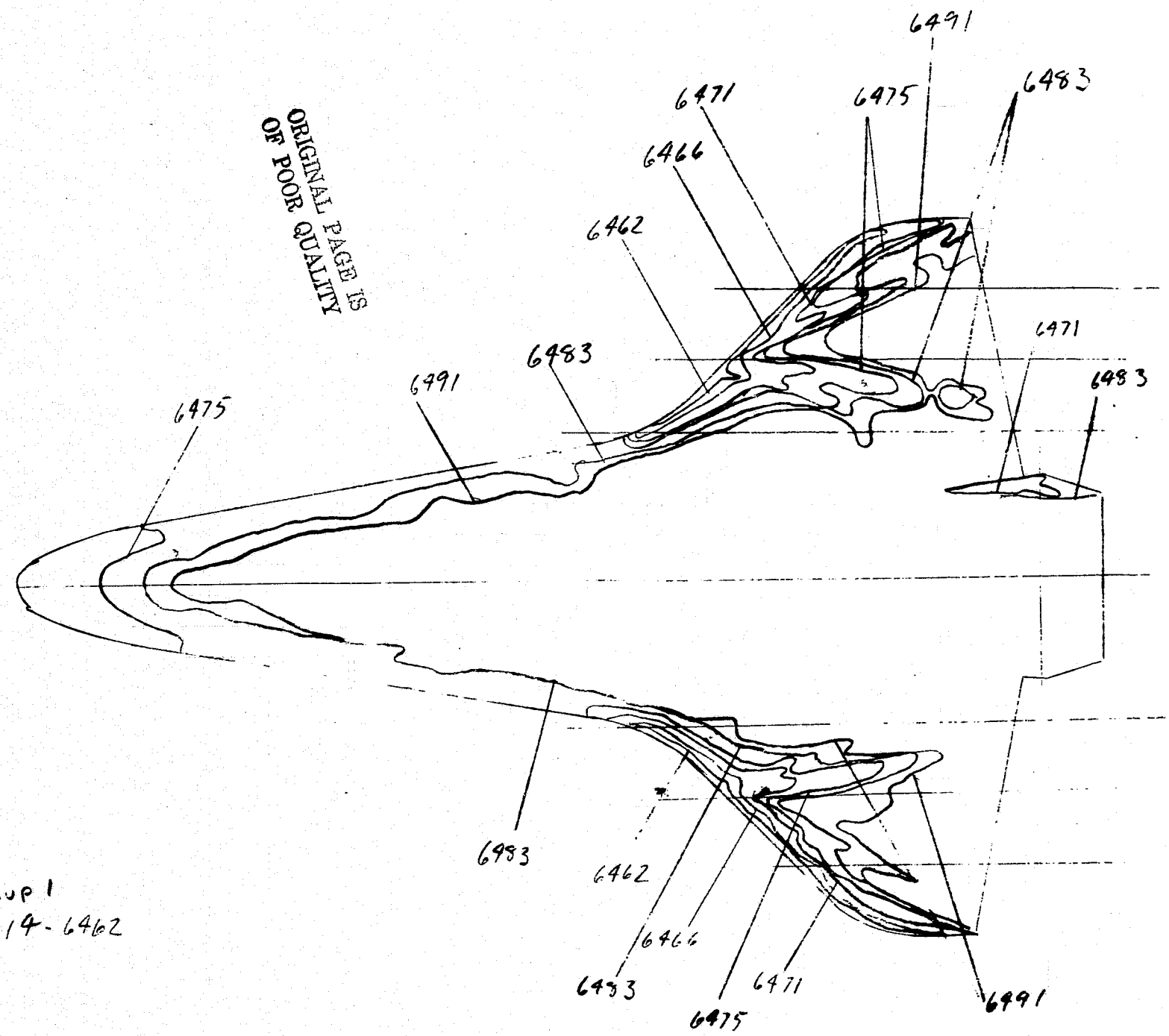

ORIGINAL PAGE IS
OF POOR QUALITY

GROUP 1
0314-6462

8/21/74

NASA-RI STS CH25A

AEDC(ARO,INC.) ARNOLD AFS, TENNESSEE
VON KARMAN GAS DYNAMICS FACILITY
50 INCH HYPERSONIC TUNNEL B

V418-83A

GROUP	CONFIG	MODEL	MACH NO	PO(PSIA)	TO(DEG R)	ALPHA-MODEL	ALPHA-SECTOR	ALPHA-PREBEND	ROLL-MODEL	YAW
1	1	ORBITER	7.90	110.8	1259	30.00	0	30.00	180.00	-.00

T-INF (DEG R)	P-INF (PSIA)	Q-INF (PSIA)	V-INF (FT/SEC)	RHO-INF (SLUGS/FT3)	MU-INF (LB-SEC/FT2)	RE/FT (FT-1)	HREF (R= .0175FT)	STREF (R= .0175FT)
93.4	.012	.538	3741	1.106E-05	7.521E-08	5.500E 05	1.791E-02	5.464E-02

CAMERA	ROLL NO	PAINT TEMP (DEG F)	INITIAL TEMP (DEG F)	SQUARE ROOT (RHOXCXK)	TBAR(TO)	BETA(TO)
TOP(T)	314	225	79	.0528	0	0

	PIC NO	TIME	DELTIME	H(TO)	H(TO)/HREF	H(.9TO)	H(.9TO)/HREF	H(.867TO)	H(.867TO)/HREF	ST(TO)
T	6457(225)	0		MODEL HAS NOT REACHED CENTERLINE						
T	6458(225)	.98		MODEL HAS NOT REACHED CENTERLINE						
T	6459(225)	2.00		MODEL HAS NOT REACHED CENTERLINE						
INJECT TIME =		2.03								
T	6460(225)	3.03	1.89	8.244E-03	.4602	1.044E-02	.5828	1.145E-02	.6390	2.480E-02
T	6461(225)	4.05	2.92	6.637E-03	.3707	8.404E-03	.4694	9.214E-03	.5147	1.999E-02
T	6462(225)	5.11	3.97	5.690E-03	.3178	7.205E-03	.4024	7.900E-03	.4412	1.713E-02
T	6463(225)	6.16	5.02	5.059E-03	.2826	6.406E-03	.3578	7.024E-03	.3923	1.523E-02
T	6464(225)	7.18	6.05	4.610E-03	.2574	5.837E-03	.3259	6.400E-03	.3573	1.387E-02
T	6465(225)	8.23	7.10	4.255E-03	.2377	5.388E-03	.3009	5.907E-03	.3299	1.281E-02
T	6466(225)	9.26	8.12	3.977E-03	.2221	5.036E-03	.2813	5.521E-03	.3084	1.198E-02
T	6467(225)	10.31	9.17	3.742E-03	.2090	4.739E-03	.2647	5.195E-03	.2902	1.127E-02
T	6468(225)	11.36	10.22	3.545E-03	.1980	4.488E-03	.2507	4.921E-03	.2749	1.067E-02
T	6469(225)	12.39	11.25	3.379E-03	.1887	4.279E-03	.2390	4.691E-03	.2620	1.017E-02
T	6470(225)	13.44	12.30	3.231E-03	.1805	4.092E-03	.2286	4.486E-03	.2506	9.730E-03
T	6471(225)	14.49	13.35	3.102E-03	.1732	3.928E-03	.2194	4.306E-03	.2405	9.340E-03
T	6472(225)	15.54	14.40	2.986E-03	.1668	3.782E-03	.2112	4.146E-03	.2316	8.992E-03
T	6473(225)	16.57	15.43	2.885E-03	.1612	3.654E-03	.2041	4.006E-03	.2238	8.688E-03
T	6474(225)	17.62	16.48	2.792E-03	.1560	3.535E-03	.1976	3.876E-03	.2166	8.414E-03
T	6475(225)	18.67	17.53	2.707E-03	.1513	3.428E-03	.1915	3.758E-03	.2100	8.157E-03
T	6476(225)	19.70	18.56	2.631E-03	.1471	3.332E-03	.1862	3.653E-03	.2042	7.936E-03
T	6477(225)	20.75	19.61	2.559E-03	.1430	3.241E-03	.1811	3.553E-03	.1986	7.713E-03
T	6478(225)	21.80	20.66	2.493E-03	.1393	3.157E-03	.1764	3.462E-03	.1935	7.515E-03
T	6479(225)	22.85	21.71	2.432E-03	.1359	3.080E-03	.1721	3.377E-03	.1887	7.330E-03
T	6480(225)	23.88	22.74	2.377E-03	.1327	3.010E-03	.1680	3.300E-03	.1842	7.150E-03
T	6481(225)	24.93	23.79	2.324E-03	.1295	2.943E-03	.1640	3.226E-03	.1798	6.966E-03

ORIGINAL PAGE IS OF POOR QUALITY

****
* UNCLASSIFIED *
****

8/21/74

NASA-RI STS OH25A

V418-83A

AEDC(ARO,INC.) ARNOLD AFS, TENNESSEE
VON KARMAN GAS DYNAMICS FACILITY
50 INCH HYPERSONIC TUNNEL B

GROUP	CONFIG	MODEL	MACH NO	PO(PSIA)	TO(DEG R)	ALPHA-MODEL	ALPHA-SECTOR	ALPHA-PREBEND	ROLL-MODEL	YAW
1	1	ORBITER	7.90	111.2	1259	30.00	0	30.00	180.00	-.00

T-INF (DEG R)	P-INF (PSIA)	Q-INF (PSIA)	V-INF (FT/SEC)	RHO-INF (SLUGS/FT3)	MU-INF (LB-SEC/FT2)	RE/FT (FT-1)	HREF (R= .0175FT)	STREF (R= .0175FT)
93.4	.012	.540	3741	1.110E-05	7.521E-08	5.520E 05	1.794E-02	5.455E-02

CAMERA TOP(T)	ROLL NO	PAINT TEMP (DEG F)	INITIAL TEMP (DEG F)	SQUARE ROOT (RHOXCXK)	TBAR(TO)	BETA(TO)
	314	225	79	.0528	2.027E-01	2.1466E-01

	PIC NO	TIME	DELTIME	H(TO)	H(TO)/HREF	H(.9TO)	H(.9TO)/HREF	H(.867TO)	H(.867TO)/HREF	ST(TO)
T	6482(225)	25.95	24.82	2.275E-03	.1267	2.881E-03	.1604	3.159E-03	.1759	6.808E-03
T	6483(225)	27.03	25.89	2.227E-03	.1239	2.821E-03	.1568	3.092E-03	.1720	6.647E-03
T	6484(225)	28.06	26.92	2.185E-03	.1213	2.766E-03	.1535	3.033E-03	.1683	6.497E-03
T	6485(225)	29.11	27.97	2.143E-03	.1188	2.714E-03	.1504	2.975E-03	.1649	6.357E-03
T	6486(225)	30.13	29.00	2.105E-03	.1166	2.665E-03	.1476	2.922E-03	.1618	6.232E-03
T	6487(225)	31.19	30.05	2.068E-03	.1145	2.618E-03	.1449	2.871E-03	.1589	6.117E-03
T	6488(225)	32.24	31.10	2.032E-03	.1125	2.574E-03	.1424	2.822E-03	.1561	6.007E-03
T	6489(225)	33.26	32.13	2.000E-03	.1106	2.532E-03	.1401	2.776E-03	.1536	5.911E-03
T	6490(225)	34.31	33.18	1.968E-03	.1089	2.492E-03	.1379	2.732E-03	.1512	5.817E-03
T	6491(225)	35.37	34.23	1.937E-03	.1072	2.453E-03	.1357	2.690E-03	.1488	5.726E-03
T	6492(225)	36.39	35.25	1.909E-03	.1056	2.417E-03	.1338	2.650E-03	.1466	5.642E-03
T	6493(225)	37.44	36.30	1.881E-03	.1041	2.382E-03	.1319	2.612E-03	.1446	5.565E-03
T	6494(225)	38.49	37.36	1.854E-03	.1027	2.348E-03	.1300	2.575E-03	.1426	5.491E-03
T	6495(225)	39.52	38.38	1.829E-03	.1014	2.317E-03	.1284	2.540E-03	.1407	5.422E-03
T	6496(225)	40.57	39.43	1.805E-03	.1000	2.286E-03	.1267	2.506E-03	.1389	5.354E-03
		41.62		MODEL HAS LEFT CENTERLINE						
T	6497(225)	41.62	40.48	1.781E-03	.0988	2.256E-03	.1251	2.473E-03	.1371	5.288E-03
T	6498(225)	42.65	41.51	1.759E-03	.0976	2.228E-03	.1236	2.442E-03	.1355	5.227E-03
T	6499(225)	43.70	42.56	1.737E-03	.0964	2.200E-03	.1221	2.412E-03	.1339	5.167E-03
T	6500(225)	44.75	43.61	1.716E-03	.0953	2.173E-03	.1207	2.383E-03	.1324	5.113E-03
T	6501(225)	45.78	44.64	1.696E-03	.0942	2.148E-03	.1193	2.355E-03	.1308	5.054E-03

ERROR IN POWRF BASE<0 A = 6001000000001017 CALL FROM 72651

ORIGINAL PAGE IS
POOR QUALITY

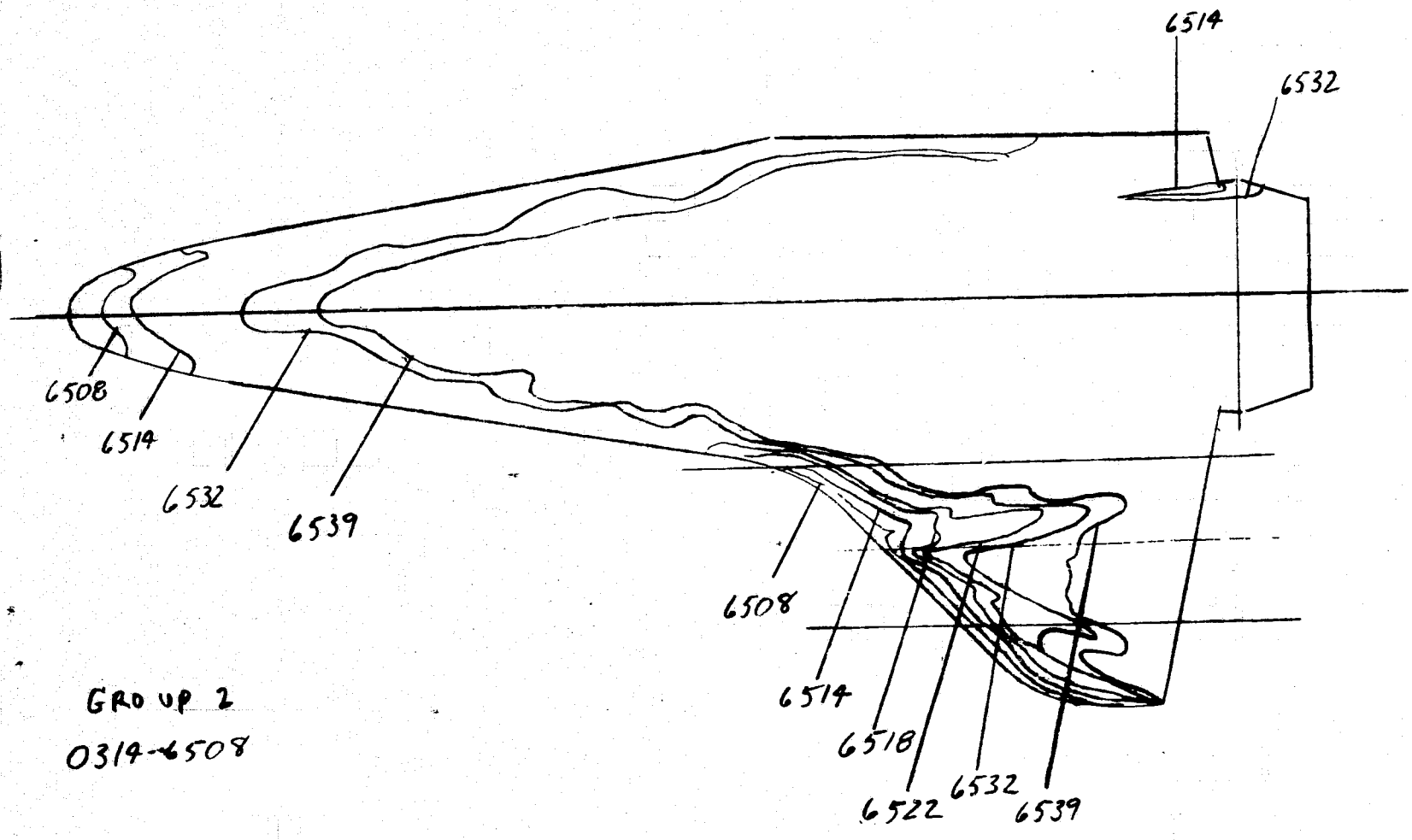

GROUP 2
0314-6508

8/21/74

NASA-RI STS OH25A

V418-83A

AEDC(ARO,INC.) ARNOLD AFS, TENNESSEE
VON KARMAN GAS DYNAMICS FACILITY
50 INCH HYPERSONIC TUNNEL B

GROUP	CONFIG	MODEL	MACH NO	PO(PSIA)	TO(DEG R)	ALPHA-MODEL	ALPHA-SECTOR	ALPHA-PREBEND	ROLL-MODEL	YAW
2	2	40 PERCENT	7.90	112.0	1265	30.00	0	30.00	180.00	-.00

T-INF (DEG R)	P-INF (PSIA)	Q-INF (PSIA)	V-INF (FT/SEC)	RHO-INF (SLUGS/FT3)	MU-INF (LB-SEC/FT2)	RE/FT (FT-1)	HREF (R= .0175FT)	STREF (R= .0175FT)
93.8	.012	.544	3749	1.113E-05	7.552E-08	5.525E 05	1.802E-02	5.449E-02

CAMERA TOP(T)	ROLL NO	PAINT TEMP (DEG F)	INITIAL TEMP (DEG F)	SQUARE ROOT (RHOXCXK)	TBAR(TO)	BETA(TO)
	314	225	79	.0528	0	0

	PIC NO	TIME	DELTIME	H(TO)	H(TO)/HREF	H(.9TO)	H(.9TO)/HREF	H(.867TO)	H(.867TO)/HREF	ST(TO)
T	6502(225)	0		MODEL HAS NOT REACHED CENTERLINE						
T	6503(225)	.88		MODEL HAS NOT REACHED CENTERLINE						
T	6504(225)	1.90		MODEL HAS NOT REACHED CENTERLINE						
INJECT TIME =		2.05								
T	6505(225)	2.93	1.78	8.434E-03	.4684	1.066E-02	.5923	1.169E-02	.6491	2.519E-02
T	6506(225)	3.95	2.80	6.715E-03	.3733	8.491E-03	.4720	9.305E-03	.5172	2.009E-02
T	6507(225)	5.01	3.85	5.726E-03	.3182	7.240E-03	.4023	7.935E-03	.4409	1.712E-02
T	6508(225)	6.06	4.90	5.075E-03	.2822	6.418E-03	.3568	7.033E-03	.3910	1.519E-02
T	6509(225)	7.11	5.96	4.606E-03	.2560	5.824E-03	.3238	6.382E-03	.3548	1.378E-02
T	6510(225)	8.13	6.98	4.254E-03	.2365	5.379E-03	.2990	5.895E-03	.3277	1.273E-02
T	6511(225)	9.19	8.03	3.966E-03	.2205	5.015E-03	.2788	5.496E-03	.3055	1.187E-02
T	6512(225)	10.24	9.08	3.729E-03	.2072	4.716E-03	.2620	5.168E-03	.2872	1.115E-02
T	6513(225)	11.29	10.14	3.531E-03	.1963	4.464E-03	.2482	4.892E-03	.2720	1.056E-02
T	6514(225)	12.31	11.16	3.364E-03	.1870	4.254E-03	.2365	4.662E-03	.2592	1.007E-02
T	6515(225)	13.37	12.21	3.216E-03	.1787	4.067E-03	.2260	4.457E-03	.2477	9.616E-03
T	6516(225)	14.42	13.26	3.086E-03	.1715	3.903E-03	.2169	4.277E-03	.2376	9.227E-03
T	6517(225)	15.47	14.32	2.971E-03	.1651	3.757E-03	.2087	4.117E-03	.2288	8.881E-03
T	6518(225)	16.49	15.34	2.870E-03	.1594	3.629E-03	.2015	3.977E-03	.2209	8.572E-03
T	6519(225)	17.55	16.39	2.776E-03	.1542	3.511E-03	.1950	3.847E-03	.2137	8.293E-03
T	6520(225)	18.60	17.44	2.691E-03	.1495	3.403E-03	.1890	3.729E-03	.2071	8.039E-03
T	6521(225)	19.65	18.50	2.614E-03	.1452	3.305E-03	.1836	3.622E-03	.2012	7.808E-03
T	6522(225)	20.67	19.52	2.544E-03	.1412	3.217E-03	.1786	3.525E-03	.1957	7.593E-03
T	6523(225)	21.72	20.57	2.478E-03	.1376	3.134E-03	.1740	3.434E-03	.1906	7.396E-03
T	6524(225)	22.78	21.62	2.417E-03	.1341	3.057E-03	.1696	3.350E-03	.1859	7.208E-03
T	6525(225)	23.80	22.65	2.362E-03	.1311	2.987E-03	.1657	3.273E-03	.1816	7.043E-03
T	6526(225)	24.85	23.70	2.309E-03	.1281	2.920E-03	.1620	3.199E-03	.1775	6.885E-03

****
* UNCLASSIFIED *
****

8/21/74

NASA-RI STS OH25A

V41B-83A

AEDC(ARO,INC.) ARNOLD AFS, TENNESSEE
VON KARMAN GAS DYNAMICS FACILITY
50 INCH HYPERSONIC TUNNEL B

GROUP	CONFIG	MODEL	MACH NO	PO(PSIA)	TO(DEG R)	ALPHA-MODEL	ALPHA-SECTOR	ALPHA-PREBEND	ROLL-MODEL	YAW
2	2	40 PERCENT	7.90	112.0	1265	30.00	0	30.00	180.00	-.00

T-INF (DEG R)	P-INF (PSIA)	Q-INF (PSIA)	V-INF (FT/SEC)	RHO-INF (SLUGS/FT3)	MU-INF (LB-SEC/FT2)	RE/FT (FT-1)	HREF (R= .0175FT)	STREF (R= .0175FT)
93.8	.012	.544	3750	1.113E-05	7.554E-08	5.523E 05	1.802E-02	5.449E-02

CAMERA TOP(T)	ROLL NO	PAINT TEMP (DEG F)	INITIAL TEMP (DEG F)	SQUARE ROOT (RHOXCXK)	TBAR(TO)	BETA(TO)
	314	225	79	.0528	2.012E-01	2.1289E-01

	PIC NO	TIME	DELTIME	H(TO)	H(TO)/HREF	H(.9TO)	H(.9TO)/HREF	H(.867TO)	H(.867TO)/HREF	ST(TO)
T	6527(225)	25.90	24.75	2.259E-03	.1254	2.857E-03	.1586	3.131E-03	.1738	6.743E-03
T	6528(225)	26.93	25.78	2.214E-03	.1229	2.799E-03	.1554	3.068E-03	.1703	6.608E-03
T	6529(225)	27.98	26.83	2.170E-03	.1204	2.744E-03	.1523	3.007E-03	.1669	6.472E-03
T	6530(225)	29.03	27.88	2.129E-03	.1181	2.692E-03	.1494	2.950E-03	.1637	6.349E-03
T	6531(225)	30.08	28.93	2.090E-03	.1159	2.642E-03	.1466	2.896E-03	.1606	6.227E-03
T	6532(225)	31.11	29.96	2.054E-03	.1139	2.597E-03	.1440	2.846E-03	.1578	6.119E-03
T	6533(225)	32.16	31.01	2.019E-03	.1120	2.552E-03	.1416	2.797E-03	.1551	6.015E-03
T	6534(225)	33.21	32.06	1.985E-03	.1101	2.510E-03	.1392	2.751E-03	.1526	5.915E-03
T	6535(225)	34.24	33.09	1.954E-03	.1084	2.471E-03	.1371	2.708E-03	.1502	5.828E-03
T	6536(225)	35.29	34.14	1.924E-03	.1067	2.433E-03	.1349	2.666E-03	.1479	5.733E-03
T	6537(225)	36.34	35.19	1.895E-03	.1051	2.396E-03	.1329	2.626E-03	.1456	5.646E-03
T	6538(225)	37.39	36.24	1.867E-03	.1036	2.361E-03	.1309	2.587E-03	.1435	5.564E-03
T	6539(225)	38.42	37.27	1.841E-03	.1021	2.328E-03	.1291	2.551E-03	.1415	5.487E-03
T	6540(225)	39.47	38.32	1.816E-03	.1007	2.296E-03	.1273	2.516E-03	.1396	5.411E-03
T	6541(225)	40.52	39.37	1.791E-03	.0994	2.265E-03	.1256	2.482E-03	.1377	5.338E-03
T	6542(225)	41.57	40.42	1.768E-03	.0981	2.236E-03	.1240	2.450E-03	.1359	5.268E-03
		42.40		MODEL HAS LEFT CENTERLINE						
T	6543(225)	42.60	41.45	1.746E-03	.0968	2.208E-03	.1224	2.419E-03	.1342	5.203E-03
T	6544(225)	43.65	42.50	1.724E-03	.0956	2.180E-03	.1209	2.389E-03	.1325	5.138E-03
T	6545(225)	44.70	43.55	1.703E-03	.0945	2.154E-03	.1195	2.360E-03	.1309	5.075E-03
T	6546(225)	45.75	44.60	1.683E-03	.0933	2.128E-03	.1180	2.332E-03	.1294	5.015E-03
T	6547(225)	46.78	45.63	1.664E-03	.0923	2.104E-03	.1167	2.306E-03	.1279	4.959E-03
T	6548(225)	47.83	46.68	1.645E-03	.0912	2.080E-03	.1153	2.280E-03	.1264	4.898E-03
T	6549(225)	48.88	47.73	1.627E-03	.0902	2.057E-03	.1141	2.255E-03	.1250	4.848E-03

ERROR IN POWRF BASE<0 A = 6001000000001017 CALL FROM 72651

ORIGINAL PAGE OF POOR QUALITY

GROUP 3

ORIGINAL PAGE IS
OF POOR QUALITY

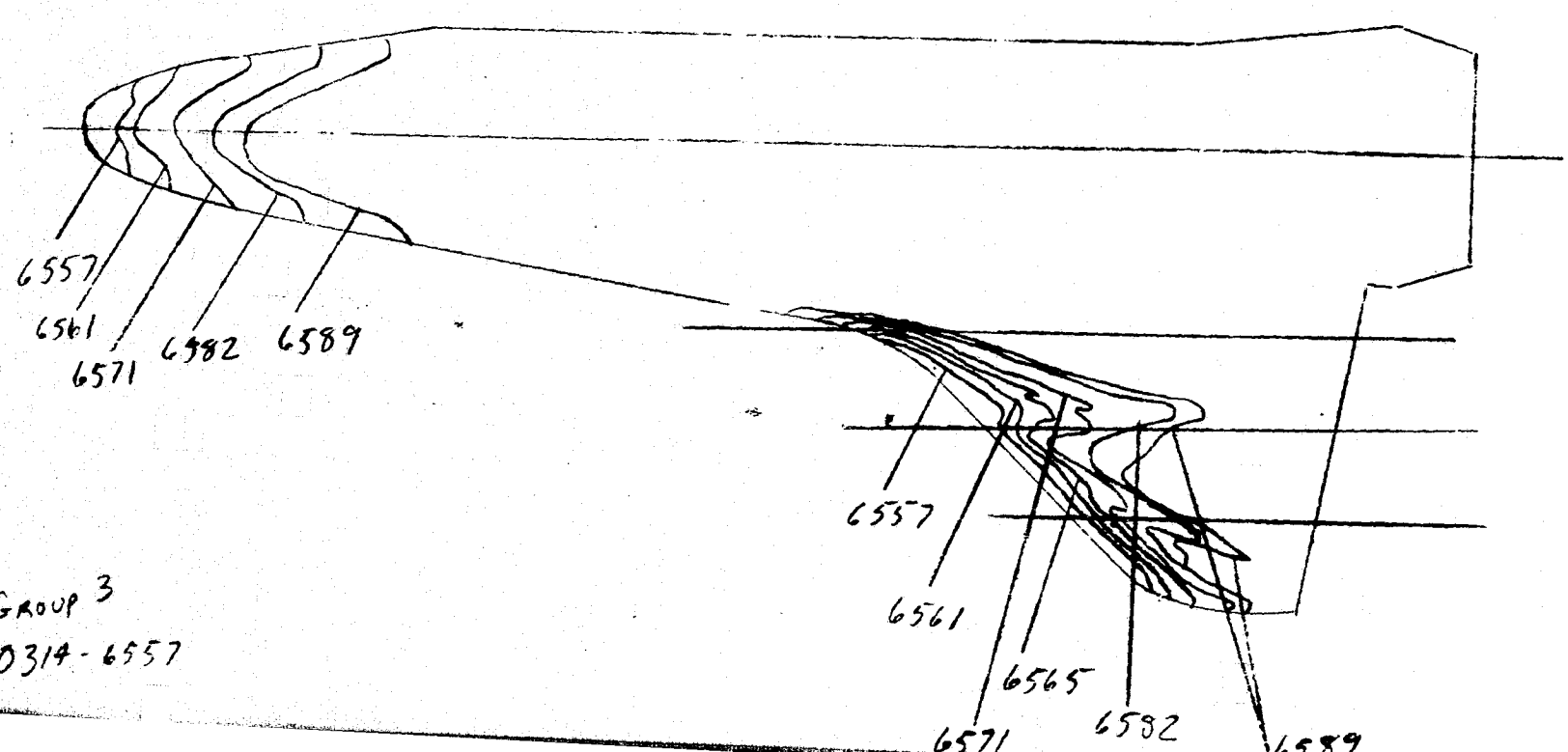

GROUP 3
0314 - 6557

8/21/74

NASA-RI STS OH25A

V418-83A

AEDC(ARO,INC.) ARNOLD AFS, TENNESSEE
VON KARMAN GAS DYNAMICS FACILITY
50 INCH HYPERSONIC TUNNEL B

GROUP	CONFIG	MODEL	MACH NO	PO(PSIA)	TO(DEG R)	ALPHA-MODEL	ALPHA-SECTOR	ALPHA-PREBEND	ROLL-MODEL	YAW
3	3	BODY FLUSH	7.90	111.1	1268	30.00	0	30.00	180.00	-.00

T-INF (DEG R)	P-INF (PSIA)	Q-INF (PSIA)	V-INF (FT/SEC)	RHO-INF (SLUGS/FT3)	MU-INF (LB-SEC/FT2)	RE/FT (FT-1)	HREF (R= .0175FT)	STREF (R= .0175FT)
94.0	.012	.539	3754	1.101E-05	7.571E-08	5.460E 05	1.796E-02	5.479E-02

CAMERA TOP(T)	ROLL NO	PAINT TEMP (DEG F)	INITIAL TEMP (DEG F)	SQUARE ROOT (RHOACXK)	TBAR(TO)	BETA(TO)
	314	225	79	.0528	0	0

	PIC NO	TIME	DELTIME	H(TO)	H(TO)/HREF	H(.9TO)	H(.9TO)/HREF	H(.867TO)	H(.867TO)/HREF	ST(TO)
T	6550(225)	.73		MODEL HAS NOT REACHED CENTERLINE						
T	6551(225)	1.75		MODEL HAS NOT REACHED CENTERLINE						
INJECT TIME =		1.90								
T	6552(225)	2.78	1.71	8.547E-03	.4757	1.080E-02	.6011	1.183E-02	.6586	2.569E-02
T	6553(225)	3.83	2.76	6.726E-03	.3744	8.499E-03	.4731	9.311E-03	.5183	2.022E-02
T	6554(225)	4.86	3.79	5.743E-03	.3195	7.257E-03	.4038	7.951E-03	.4424	1.725E-02
T	6555(225)	5.91	4.84	5.081E-03	.2827	6.420E-03	.3572	7.034E-03	.3914	1.526E-02
T	6556(225)	6.93	5.87	4.615E-03	.2568	5.832E-03	.3245	6.389E-03	.3555	1.386E-02
T	6557(225)	7.98	6.92	4.250E-03	.2364	5.370E-03	.2987	5.884E-03	.3272	1.276E-02
T	6558(225)	9.04	7.97	3.960E-03	.2201	5.003E-03	.2781	5.482E-03	.3047	1.187E-02
T	6559(225)	10.09	9.02	3.722E-03	.2069	4.703E-03	.2614	5.152E-03	.2864	1.116E-02
T	6560(225)	11.11	10.04	3.527E-03	.1960	4.456E-03	.2476	4.882E-03	.2713	1.057E-02
T	6561(225)	12.16	11.10	3.355E-03	.1864	4.240E-03	.2356	4.645E-03	.2581	1.005E-02
T	6562(225)	13.22	12.15	3.207E-03	.1782	4.052E-03	.2251	4.440E-03	.2467	9.608E-03
T	6563(225)	14.27	13.20	3.077E-03	.1709	3.887E-03	.2159	4.259E-03	.2365	9.209E-03
T	6564(225)	15.29	14.22	2.964E-03	.1647	3.745E-03	.2081	4.103E-03	.2280	8.878E-03
T	6565(225)	16.34	15.28	2.860E-03	.1588	3.613E-03	.2007	3.959E-03	.2199	8.560E-03
T	6566(225)	17.40	16.33	2.766E-03	.1535	3.495E-03	.1939	3.829E-03	.2125	8.265E-03
T	6567(225)	18.45	17.38	2.681E-03	.1488	3.388E-03	.1881	3.712E-03	.2061	8.018E-03
T	6568(225)	19.47	18.40	2.605E-03	.1446	3.292E-03	.1827	3.607E-03	.2002	7.792E-03
T	6569(225)	20.52	19.46	2.534E-03	.1406	3.202E-03	.1777	3.508E-03	.1946	7.572E-03
T	6570(225)	21.57	20.51	2.468E-03	.1370	3.119E-03	.1730	3.417E-03	.1896	7.375E-03
T	6571(225)	22.63	21.56	2.407E-03	.1335	3.042E-03	.1687	3.333E-03	.1848	7.187E-03
T	6572(225)	23.65	22.58	2.352E-03	.1305	2.972E-03	.1649	3.256E-03	.1807	7.028E-03
T	6573(225)	24.70	23.64	2.299E-03	.1275	2.905E-03	.1611	3.183E-03	.1765	6.864E-03
T	6574(225)	25.75	24.69	2.250E-03	.1248	2.842E-03	.1576	3.114E-03	.1727	6.716E-03

****
* UNCLASSIFIED *
****

8/21/74

NASA-RI STS OH25A

AEDC(ARO,INC.) ARNOLD AFS, TENNESSEE
VON KARMAN GAS DYNAMICS FACILITY
50 INCH HYPERSONIC TUNNEL R

V41B-83A

GROUP	CONFIG	MODEL	MACH NO	PO(PSIA)	TO(DEG R)	ALPHA-MODEL	ALPHA-SECTOR	ALPHA-PREBEND	ROLL-MODEL	YAW
3	3	BODY FLUSH	7.90	112.0	1268	30.00	0	30.00	180.00	-.00

T-INF (DEG R)	P-INF (PSIA)	Q-INF (PSIA)	V-INF (FT/SEC)	RHO-INF (SLUGS/FT3)	MU-INF (LB-SEC/FT2)	RE/FT (FT-1)	HREF (R= .0175FT)	STREF (R= .0175FT)
94.1	.012	.544	3755	1.110E-05	7.575E-08	5.501E 05	1.803E-02	5.459E-02

CAMERA	ROLL NO	PAINT TEMP (DEG F)	INITIAL TEMP (DEG F)	SQUARE ROOT (RHOXCXK)	TBAR(TO)	BETA(TO)
TOP(T)	314	225	79	.0528	2.003E-01	2.1169E-01

	PIC NO	TIME	DELTIME	H(TO)	H(TO)/HREF	H(.9TO)	H(.9TO)/HREF	H(.867TO)	H(.867TO)/HREF	ST(TO)
T	6575(225)	26.81	25.74	2.203E-03	.1221	2.784E-03	.1543	3.050E-03	.1691	6.572E-03
T	6576(225)	27.83	26.76	2.160E-03	.1198	2.730E-03	.1514	2.991E-03	.1659	6.450E-03
T	6577(225)	28.88	27.82	2.119E-03	.1175	2.678E-03	.1485	2.934E-03	.1626	6.321E-03
T	6578(225)	29.93	28.87	2.080E-03	.1153	2.629E-03	.1457	2.880E-03	.1597	6.205E-03
T	6579(225)	30.99	29.92	2.043E-03	.1132	2.582E-03	.1431	2.829E-03	.1568	6.090E-03
T	6580(225)	32.04	30.97	2.008E-03	.1113	2.538E-03	.1407	2.780E-03	.1541	5.991E-03
T	6581(225)	33.06	32.00	1.976E-03	.1095	2.497E-03	.1384	2.736E-03	.1516	5.889E-03
T	6582(225)	34.11	33.05	1.944E-03	.1077	2.457E-03	.1361	2.692E-03	.1492	5.795E-03
T	6583(225)	35.17	34.10	1.914E-03	.1061	2.419E-03	.1340	2.650E-03	.1468	5.705E-03
T	6584(225)	36.19	35.12	1.886E-03	.1045	2.383E-03	.1320	2.611E-03	.1446	5.616E-03
T	6585(225)	37.24	36.17	1.858E-03	.1029	2.348E-03	.1301	2.573E-03	.1425	5.534E-03
T	6586(225)	38.29	37.23	1.832E-03	.1014	2.315E-03	.1281	2.536E-03	.1404	5.450E-03
T	6587(225)	39.35	38.28	1.807E-03	.1001	2.283E-03	.1264	2.501E-03	.1385	5.380E-03
T	6588(225)	40.37	39.30	1.783E-03	.0987	2.253E-03	.1247	2.468E-03	.1366	5.305E-03
T	6589(225)	41.42	40.35	1.759E-03	.0974	2.223E-03	.1231	2.436E-03	.1348	5.235E-03
T	6590(225)	42.47	41.41	1.737E-03	.0962	2.195E-03	.1215	2.405E-03	.1331	5.168E-03
		42.80		MODEL HAS LEFT CENTERLINE						
T	6591(225)	43.53	42.46	1.715E-03	.0950	2.167E-03	.1200	2.375E-03	.1315	5.104E-03
T	6592(225)	44.55	43.48	1.695E-03	.0938	2.142E-03	.1185	2.347E-03	.1298	5.039E-03
T	6593(225)	45.60	44.53	1.675E-03	.0927	2.116E-03	.1171	2.319E-03	.1283	4.979E-03

ERROR IN POWRF BASE<0 A = 6001000000001017 CALL FROM 72651

ORIGINAL PAGE IS
OF POOR QUALITY

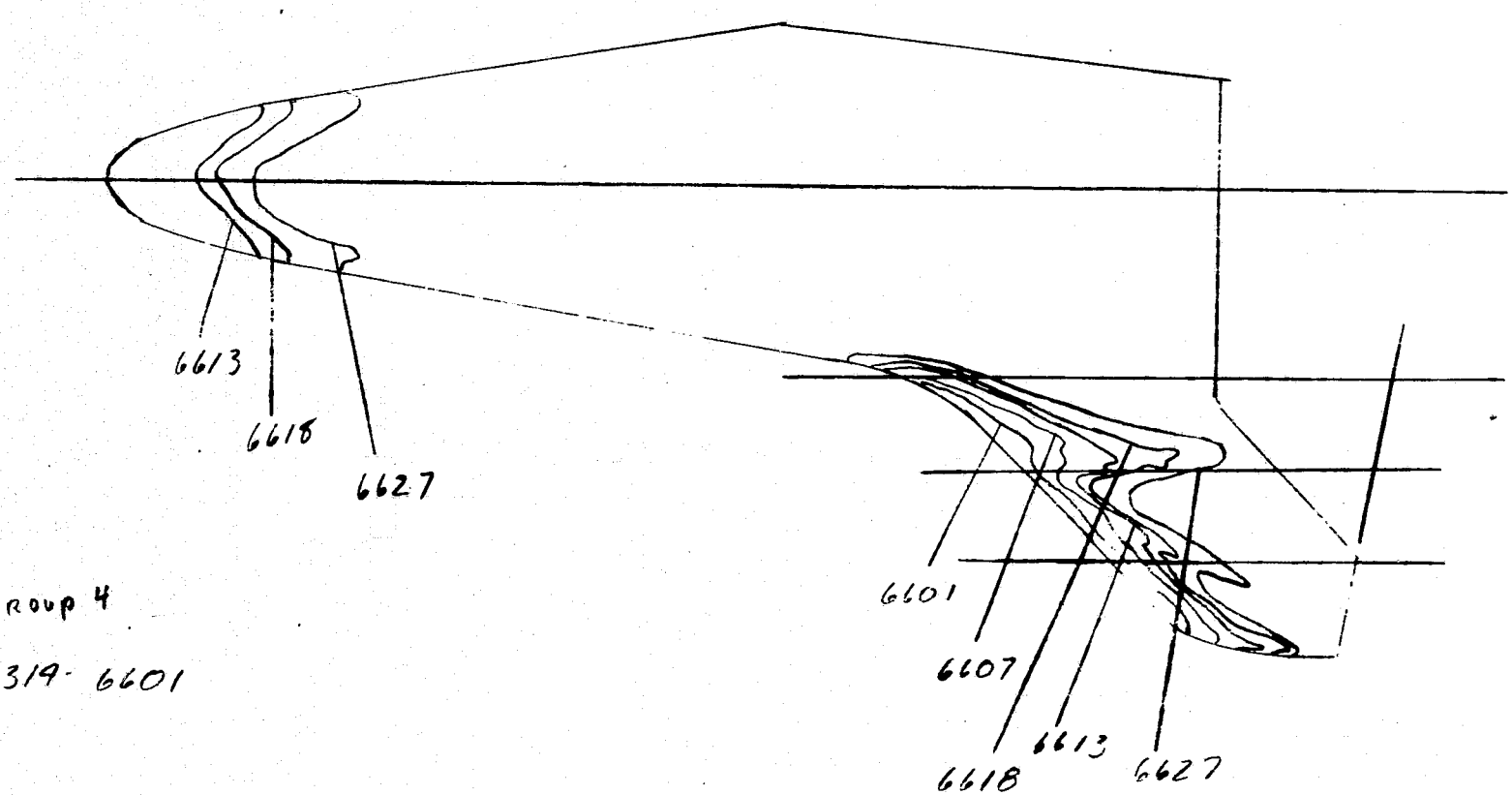

GROUP 4

0319-6601

8/21/74

NASA-RI STS OH25A

V418-83A

AEDC(ARO,INC.) ARNOLD AFS, TENNESSEE
VON KARMAN GAS DYNAMICS FACILITY
50 INCH HYPERSONIC TUNNEL B

GROUP	CONFIG	MODEL	MACH NO	PO(PSIA)	TO(DEG R)	ALPHA-MODEL	ALPHA-SECTOR	ALPHA-PREBEND	ROLL-MODEL	YAW
4	4	LEADING EDGE	7.90	112.8	1273	30.00	0	30.00	180.00	-.00

T-INF (DEG R)	P-INF (PSIA)	Q-INF (PSIA)	V-INF (FT/SEC)	RHO-INF (SLUGS/FT3)	MU-INF (LB-SEC/FT2)	RE/FT (FT-1)	HREF (R= .0175FT)	STREF (R= .0175FT)
94.4	.013	.547	3761	1.114E-05	7.602E-08	5.510E 05	1.811E-02	5.451E-02

CAMERA TOP(T)	ROLL NO	PAINT TEMP (DEG F)	INITIAL TEMP (DEG F)	SQUARE ROOT (RHOXCXK)	TBAR(TO)	BETA(TO)
	314	225	79	.0528	0	0

	PIC NO	TIME	DELTIME	H(TO)	H(TO)/HREF	H(.9TO)	H(.9TO)/HREF	H(.867TO)	H(.867TO)/HREF	ST(TO)
T	6595(225)	.03		MODEL HAS NOT REACHED CENTERLINE						
T	6596(225)	1.00		MODEL HAS NOT REACHED CENTERLINE						
T	6597(225)	2.03		MODEL HAS NOT REACHED CENTERLINE						
INJECT TIME =		2.13								
T	6598(225)	3.05	1.86	8.129E-03	.4484	1.026E-02	.5659	1.124E-02	.6197	2.407E-02
T	6599(225)	4.10	2.91	6.497E-03	.3585	8.200E-03	.4525	8.980E-03	.4955	1.926E-02
T	6600(225)	5.13	3.94	5.586E-03	.3081	7.051E-03	.3889	7.721E-03	.4259	1.654E-02
T	6601(225)	6.18	4.99	4.963E-03	.2737	6.264E-03	.3455	6.859E-03	.3784	1.470E-02
T	6602(225)	7.23	6.04	4.510E-03	.2488	5.693E-03	.3140	6.234E-03	.3438	1.336E-02
T	6603(225)	8.26	7.07	4.170E-03	.2300	5.263E-03	.2903	5.763E-03	.3179	1.235E-02
T	6604(225)	9.31	8.12	3.890E-03	.2146	4.911E-03	.2709	5.377E-03	.2966	1.152E-02
T	6605(225)	10.36	9.17	3.661E-03	.2019	4.620E-03	.2549	5.060E-03	.2791	1.084E-02
T	6606(225)	11.41	10.22	3.467E-03	.1912	4.376E-03	.2414	4.792E-03	.2643	1.027E-02
T	6607(225)	12.44	11.24	3.305E-03	.1824	4.172E-03	.2302	4.568E-03	.2521	9.797E-03
T	6608(225)	13.49	12.30	3.161E-03	.1743	3.990E-03	.2201	4.369E-03	.2410	9.360E-03
T	6609(225)	14.54	13.35	3.034E-03	.1673	3.829E-03	.2112	4.193E-03	.2313	8.984E-03
T	6610(225)	15.59	14.40	2.921E-03	.1611	3.687E-03	.2034	4.037E-03	.2227	8.650E-03
T	6611(225)	16.62	15.42	2.822E-03	.1557	3.562E-03	.1965	3.901E-03	.2151	8.357E-03
T	6612(225)	17.67	16.48	2.731E-03	.1506	3.447E-03	.1901	3.774E-03	.2082	8.086E-03
T	6613(225)	18.72	17.53	2.647E-03	.1460	3.342E-03	.1843	3.659E-03	.2018	7.840E-03
T	6614(225)	19.77	18.58	2.571E-03	.1418	3.246E-03	.1790	3.554E-03	.1960	7.615E-03
T	6615(225)	20.82	19.63	2.502E-03	.1380	3.158E-03	.1742	3.458E-03	.1907	7.408E-03
T	6616(225)	21.85	20.66	2.439E-03	.1345	3.078E-03	.1698	3.371E-03	.1859	7.222E-03
T	6617(225)	22.90	21.71	2.379E-03	.1312	3.003E-03	.1656	3.288E-03	.1814	7.045E-03
T	6618(225)	23.95	22.76	2.323E-03	.1282	2.933E-03	.1618	3.211E-03	.1771	6.880E-03
T	6619(225)	25.00	23.81	2.271E-03	.1253	2.867E-03	.1581	3.140E-03	.1732	6.726E-03

****
* UNCLASSIFIED *
****

8/21/74

NASA-RI STS OH25A

V418-83A

AEDC(ARO,INC.) ARNOLD AFS, TENNESSEE
VON KARMAN GAS DYNAMICS FACILITY
50 INCH HYPERSONIC TUNNEL B

GROUP	CONFIG	MODEL	MACH NO	PO(PSIA)	TO(DEG R)	ALPHA-MODEL	ALPHA-SECTOR	ALPHA-PREBEND	ROLL-MODEL	YAW
4	4	LEADING EDGE	7.90	113.1	1273	30.00	0	30.00	180.00	-.00

T-INF (DEG R)	P-INF (PSIA)	Q-INF (PSIA)	V-INF (FT/SEC)	RHO-INF (SLUGS/FT3)	MU-INF (LB-SEC/FT2)	RE/FT (FT-1)	HREF (R= .0175FT)	STREF (R= .0175FT)
94.4	.013	.549	3761	1.116E-05	7.602E-08	5.524E 05	1.813E-02	5.444E-02

CAMERA TOP(T)	ROLL NO	PAINT TEMP (DEG F)	INITIAL TEMP (DEG F)	SQUARE ROOT (RHOACXK)	TBAR(TO)	BETA(TO)
	314	225	79	.0528	1.989E-01	2.0991E-01

	PIC NO	TIME	DELTIME	H(TO)	H(TO)/HREF	H(.9TO)	H(.9TO)/HREF	H(.867TO)	H(.867TO)/HREF	ST(TO)
T	6620(225)	26.03	24.84	2.224E-03	.1227	2.807E-03	.1549	3.074E-03	.1696	6.592E-03
T	6621(225)	27.08	25.89	2.178E-03	.1202	2.750E-03	.1517	3.011E-03	.1661	6.451E-03
T	6622(225)	28.13	26.94	2.135E-03	.1178	2.695E-03	.1487	2.952E-03	.1628	6.324E-03
T	6623(225)	29.18	27.99	2.095E-03	.1156	2.644E-03	.1459	2.896E-03	.1597	6.204E-03
T	6624(225)	30.21	29.02	2.058E-03	.1135	2.597E-03	.1433	2.844E-03	.1569	6.099E-03
T	6625(225)	31.26	30.07	2.021E-03	.1115	2.551E-03	.1408	2.794E-03	.1542	5.991E-03
T	6626(225)	32.31	31.12	1.987E-03	.1096	2.508E-03	.1384	2.746E-03	.1515	5.889E-03
T	6627(225)	33.36	32.17	1.954E-03	.1078	2.467E-03	.1361	2.701E-03	.1490	5.792E-03
T	6628(225)	34.39	33.20	1.924E-03	.1062	2.428E-03	.1340	2.659E-03	.1467	5.702E-03
T	6629(225)	35.44	34.25	1.894E-03	.1045	2.391E-03	.1319	2.618E-03	.1444	5.614E-03
T	6630(225)	36.49	35.30	1.866E-03	.1029	2.355E-03	.1299	2.578E-03	.1423	5.530E-03
T	6631(225)	37.54	36.35	1.838E-03	.1014	2.320E-03	.1280	2.541E-03	.1402	5.449E-03
T	6632(225)	38.57	37.37	1.813E-03	.1000	2.288E-03	.1263	2.506E-03	.1383	5.374E-03
T	6633(225)	39.62	38.43	1.788E-03	.0987	2.257E-03	.1245	2.471E-03	.1364	5.300E-03
T	6634(225)	40.67	39.48	1.764E-03	.0973	2.227E-03	.1229	2.438E-03	.1345	5.229E-03
T	6635(225)	41.72	40.53	1.741E-03	.0961	2.198E-03	.1213	2.406E-03	.1328	5.161E-03
		42.82		MODEL HAS LEFT CENTERLINE						
T	6636(225)	42.75	41.55	1.719E-03	.0949	2.170E-03	.1198	2.376E-03	.1311	5.096E-03
T	6637(225)	43.80	42.61	1.698E-03	.0937	2.143E-03	.1182	2.347E-03	.1294	5.029E-03
T	6638(225)	44.85	43.66	1.677E-03	.0925	2.117E-03	.1168	2.319E-03	.1279	4.968E-03

ERROR IN POWRF BASE<0 A = 6001000000001017 CALL FROM 72651

GROUP 5

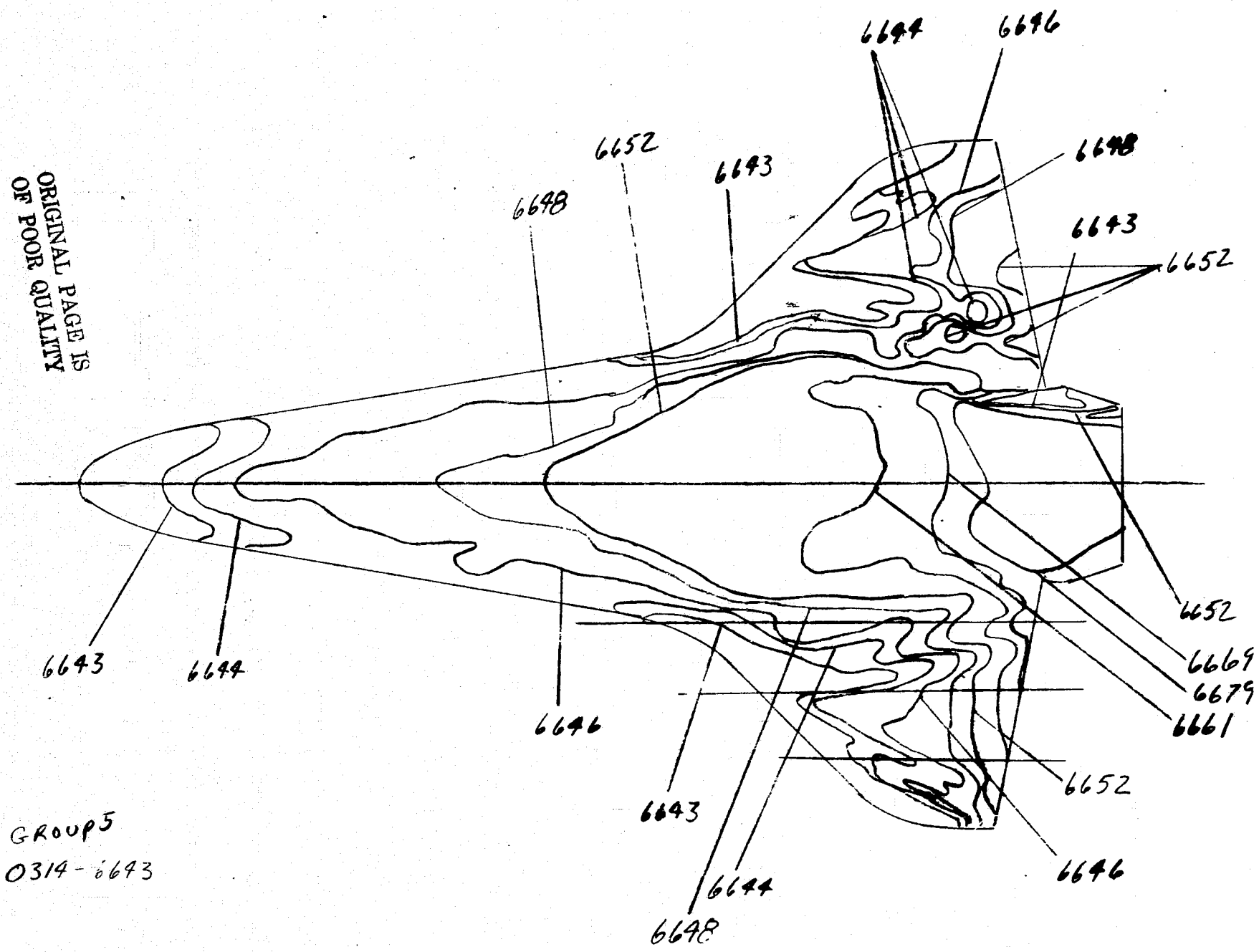

GROUP5
0314-6643

ORIGINAL PAGE IS
OF POOR QUALITY

ORIGINAL PAGE IS
OF POOR QUALITY

8/21/74

NASA-RI STS OH25A

V418-83A

AEDC(ARO,INC.) ARNOLD AFS, TENNESSEE
VON KARMAN GAS DYNAMICS FACILITY
50 INCH HYPERSONIC TUNNEL R

GROUP	CONFIG	MODEL	MACH NO	PO(PSIA)	TO(DEG R)	ALPHA-MODEL	ALPHA-SECTOR	ALPHA-PREBEND	ROLL-MODEL	YAW
5	1	ORBITER	7.90	111.6	1274	30.00	0	30.00	180.00	-.00

T-INF (DEG R)	P-INF (PSIA)	Q-INF (PSIA)	V-INF (FT/SEC)	RHO-INF (SLUGS/FT3)	MU-INF (LB-SEC/FT2)	RE/FT (FT-1)	HREF (R= .0175FT)	STREF (R= .0175FT)
94.5	.012	.542	3763	1.101E-05	7.610E-08	5.443E 05	1.801E-02	5.484E-02

CAMERA	ROLL NO	PAINT TEMP (DEG F)	INITIAL TEMP (DEG F)	SQUARE ROOT (RHOACXK)	TBAR(TO)	BETA(TO)
TOP(T)	314	225	79	.0528	0	0

	PIC NO	TIME	DELTIME	H(TO)	H(TO)/HREF	H(.9TO)	H(.9TO)/HREF	H(.867TO)	H(.867TO)/HREF	ST(TO)
T	6639(225)	.73		MODEL HAS NOT REACHED CENTERLINE						
T	6640(225)	1.75		MODEL HAS NOT REACHED CENTERLINE						
INJECT TIME =		2.00								
T	6641(225)	2.78	1.65	8.599E-03	.4767	1.085E-02	.6016	1.188E-02	.6586	2.575E-02
T	6642(225)	3.83	2.71	6.724E-03	.3728	8.485E-03	.4705	9.288E-03	.5150	2.013E-02
T	6643(225)	4.88	3.76	5.706E-03	.3162	7.201E-03	.3991	7.882E-03	.4368	1.707E-02
T	6644(225)	5.91	4.78	5.057E-03	.2800	6.382E-03	.3533	6.984E-03	.3868	1.510E-02
T	6645(225)	6.96	5.83	4.579E-03	.2534	5.778E-03	.3198	6.325E-03	.3500	1.366E-02
T	6646(225)	8.01	6.89	4.215E-03	.2332	5.319E-03	.2942	5.822E-03	.3221	1.256E-02
T	6647(225)	9.06	7.94	3.926E-03	.2171	4.954E-03	.2739	5.423E-03	.2999	1.169E-02
T	6648(225)	10.09	8.96	3.694E-03	.2042	4.662E-03	.2577	5.103E-03	.2820	1.099E-02
T	6649(225)	11.14	10.01	3.495E-03	.1931	4.410E-03	.2436	4.828E-03	.2667	1.039E-02
T	6650(225)	12.19	11.06	3.325E-03	.1836	4.196E-03	.2317	4.593E-03	.2536	9.877E-03
T	6651(225)	13.24	12.12	3.177E-03	.1754	4.010E-03	.2214	4.389E-03	.2424	9.439E-03
T	6652(225)	14.29	13.17	3.048E-03	.1682	3.846E-03	.2123	4.210E-03	.2324	9.046E-03
T	6653(225)	15.32	14.19	2.935E-03	.1620	3.705E-03	.2044	4.055E-03	.2237	8.705E-03
T	6654(225)	16.37	15.24	2.832E-03	.1563	3.575E-03	.1972	3.913E-03	.2159	8.400E-03
T	6655(225)	17.42	16.30	2.740E-03	.1511	3.457E-03	.1907	3.784E-03	.2087	8.117E-03
T	6656(225)	18.47	17.35	2.655E-03	.1464	3.351E-03	.1847	3.668E-03	.2022	7.861E-03
T	6657(225)	19.50	18.37	2.580E-03	.1422	3.256E-03	.1795	3.564E-03	.1965	7.638E-03
T	6658(225)	20.55	19.42	2.509E-03	.1382	3.167E-03	.1744	3.466E-03	.1909	7.415E-03
T	6659(225)	21.60	20.48	2.444E-03	.1347	3.084E-03	.1699	3.376E-03	.1860	7.229E-03
T	6660(225)	22.65	21.53	2.384E-03	.1312	3.008E-03	.1656	3.293E-03	.1813	7.038E-03
T	6661(225)	23.68	22.55	2.329E-03	.1282	2.939E-03	.1618	3.217E-03	.1771	6.875E-03
T	6662(225)	24.75	23.63	2.275E-03	.1251	2.871E-03	.1579	3.143E-03	.1729	6.706E-03
T	6663(225)	25.78	24.66	2.227E-03	.1225	2.811E-03	.1546	3.077E-03	.1692	6.565E-03

8/21/74

NASA-RI STS OH25A

V41R-83A

AEDC(ARO.INC.) ARNOLD AFS, TENNESSEE
VON KARMAN GAS DYNAMICS FACILITY
50 INCH HYPERSONIC TUNNEL R

GROUP	CONFIG	MODEL	MACH NO	PO(PSIA)	TO(DEG R)	ALPHA-MODEL	ALPHA-SECTOR	ALPHA-PREBEND	ROLL-MODEL	YAW
5	1	ORBITER	7.90	113.7	1275	30.00	0	30.00	180.00	-.00

T-INF (DEG R)	P-INF (PSIA)	Q-INF (PSIA)	V-INF (FT/SEC)	RHO-INF (SLUGS/FT3)	MU-INF (LB-SEC/FT2)	RE/FT (FT-1)	HREF (R= .0175FT)	STREF (R= .0175FT)
94.6	.013	.552	3764	1.121E-05	7.613E-08	5.541E 05	1.818E-02	5.434E-02

CAMERA TOP(T)	ROLL NO	PAINT TEMP (DEG F)	INITIAL TEMP (DEG F)	SQUARE ROOT (RHOXCXK)	TBAR(TO)	BETA(TO)
	314	225	79	.0528	1.985E-01	2.0946E-01

	PIC NO	TIME	DELTIME	H(TO)	H(TO)/HREF	H(.9TO)	H(.9TO)/HREF	H(.867TO)	H(.867TO)/HREF	ST(TO)
T	6664(225)	26.83	25.71	2.141E-03	.1199	2.753E-03	.1513	3.013E-03	.1656	6.424E-03
T	6665(225)	27.88	26.76	2.138E-03	.1175	2.698E-03	.1483	2.953E-03	.1623	6.291E-03
T	6666(225)	28.91	27.78	2.098E-03	.1153	2.648E-03	.1455	2.898E-03	.1593	6.174E-03
T	6667(225)	29.96	28.84	2.060E-03	.1132	2.599E-03	.1428	2.842E-03	.1563	6.060E-03
T	6668(225)	31.01	29.89	2.023E-03	.1111	2.553E-03	.1402	2.794E-03	.1535	5.947E-03
T	6669(225)	32.06	30.94	1.988E-03	.1092	2.509E-03	.1378	2.747E-03	.1509	5.845E-03
T	6670(225)	33.09	31.96	1.956E-03	.1074	2.469E-03	.1355	2.702E-03	.1484	5.746E-03
T	6671(225)	34.14	33.02	1.925E-03	.1057	2.429E-03	.1334	2.659E-03	.1460	5.654E-03
T	6672(225)	35.19	34.07	1.895E-03	.1040	2.391E-03	.1313	2.617E-03	.1437	5.566E-03
T	6673(225)	36.24	35.12	1.866E-03	.1025	2.355E-03	.1293	2.578E-03	.1415	5.482E-03
T	6674(225)	37.29	36.17	1.839E-03	.1009	2.321E-03	.1274	2.540E-03	.1394	5.397E-03
T	6675(225)	38.34	37.22	1.813E-03	.0994	2.288E-03	.1255	2.504E-03	.1374	5.315E-03
T	6676(225)	39.37	38.25	1.788E-03	.0981	2.257E-03	.1238	2.470E-03	.1355	5.244E-03
T	6677(225)	40.42	39.30	1.764E-03	.0968	2.226E-03	.1221	2.437E-03	.1337	5.173E-03
T	6678(225)	41.47	40.35	1.741E-03	.0955	2.197E-03	.1205	2.405E-03	.1319	5.101E-03
T	6679(225)	42.52	41.40	1.719E-03	.0942	2.169E-03	.1189	2.374E-03	.1302	5.036E-03
T	6680(225)	43.55	42.43	1.698E-03	.0931	2.143E-03	.1174	2.345E-03	.1285	4.970E-03
T	6681(225)	44.60	43.48	1.677E-03	.0919	2.117E-03	.1160	2.317E-03	.1270	4.910E-03
T	6682(225)	45.65	44.53	1.657E-03	.0908	2.092E-03	.1146	2.289E-03	.1255	4.852E-03
T	6683(225)	46.70	45.58	1.638E-03	.0898	2.067E-03	.1133	2.263E-03	.1240	4.795E-03
T	6684(225)	47.73	46.61	1.620E-03	.0887	2.044E-03	.1120	2.238E-03	.1226	4.738E-03
		48.11		MODEL HAS LEFT CENTERLINE						
T	6685(225)	48.78	47.66	1.602E-03	.0878	2.022E-03	.1108	2.213E-03	.1212	4.686E-03
T	6686(225)	49.83	48.71	1.585E-03	.0868	2.000E-03	.1095	2.189E-03	.1199	4.631E-03
T	6687(225)	50.88	49.76	1.568E-03	.0858	1.979E-03	.1083	2.166E-03	.1186	4.582E-03

****
* UNCLASSIFIED *
****

8/21/74

NASA-RI STS OH25A

V41B-83A

AEDC(ARO,INC.) ARNOLD AFS, TENNESSEE
VON KARMAN GAS DYNAMICS FACILITY
50 INCH HYPERSONIC TUNNEL A

GROUP	CONFIG	MODEL	MACH NO	PO(PSIA)	TO(DEG R)	ALPHA-MODEL	ALPHA-SECTOR	ALPHA-PREBEND	ROLL-MODEL	YAW
5	1	OREITER	7.90	114.6	1275	30.00	0	30.00	180.00	-.00

T-INF (DEG R)	P-INF (PSIA)	Q-INF (PSIA)	V-INF (FT/SEC)	RHO-INF (SLUGS/FT3)	MU-INF (LB-SEC/FT2)	RE/FT (FT-1)	HREF (R= .0175FT)	STREF (R= .0175FT)
24.6	.013	.557	3765	1.130E-05	7.615E-08	5.588E 05	1.826E-02	5.412E-02

CAMERA TOP(T)	ROLL NO	PAINT TEMP (DEG F)	INITIAL TEMP (DEG F)	SQUARE ROOT (RHOXCXK)	TBAR(TO)	BETA(TO)
	214	225	79	.0528	1.985E-01	2.0946E-01

	PIC NO	TIME	DELTIME	H(TO)	H(TO)/HREF	H(.9TO)	H(.9TO)/HREF	H(.867TO)	H(.867TO)/HREF	ST(TO)
T	6688(225)	51.51	50.79	1.552E-03	.0850	1.958E-03	.1072	2.144E-03	.1174	4.535E-03

ERROR IN POWRF BASE<0 A = 5777377762626227 CALL FROM 72651

GROUP 6

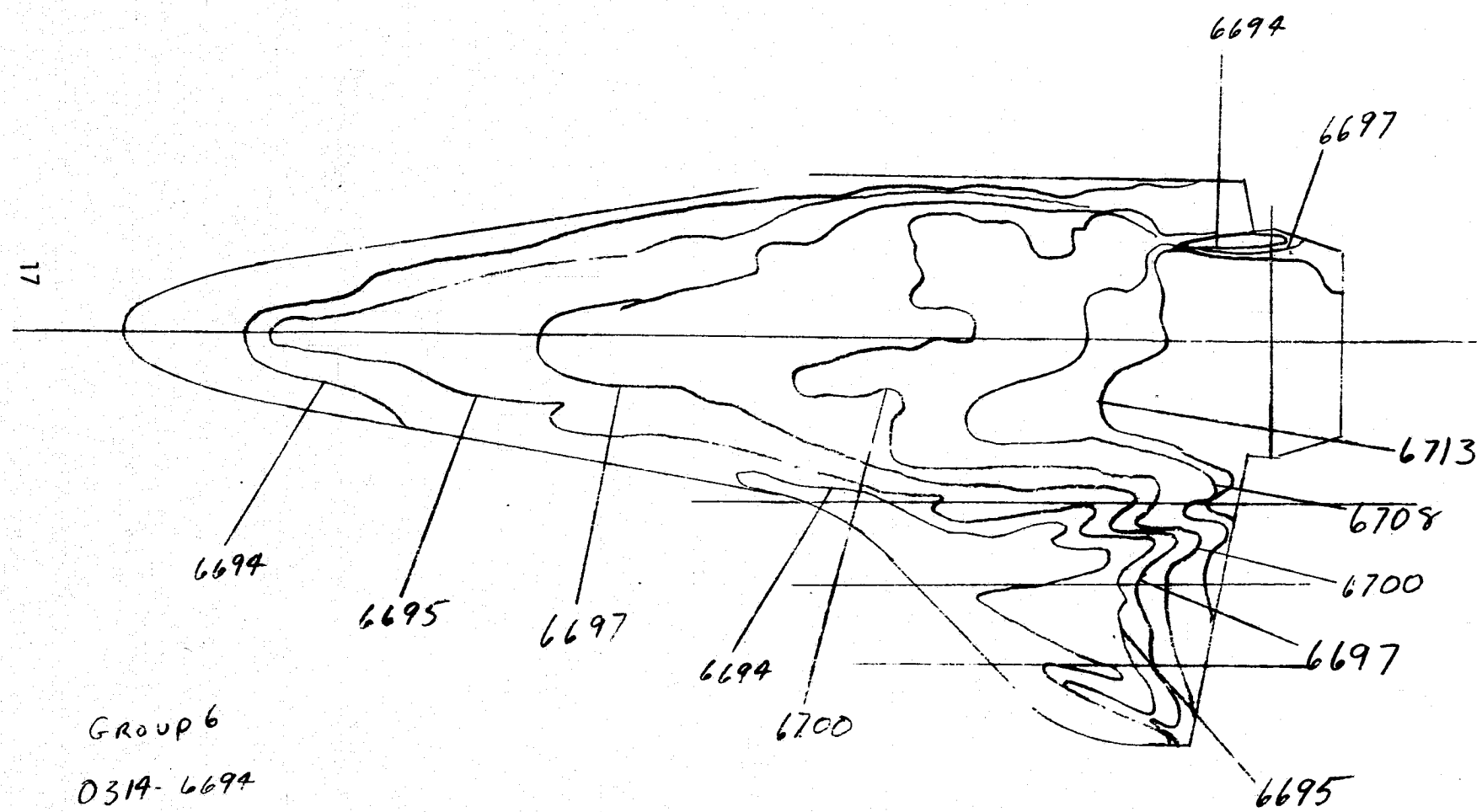

GROUP 6

0314-6694

8/21/74

NASA-RI STS OH25A

V418-83A

AEDC(ARO,INC.) ARNOLD AFS, TENNESSEE
VON KARMAN GAS DYNAMICS FACILITY
50 INCH HYPERSONIC TUNNEL B

GROUP	CONFIG	MODEL	MACH. NO	PO(PSIA)	TO(DEG R)	ALPHA-MODEL	ALPHA-SECTOR	ALPHA-PREBEND	ROLL-MODEL	YAW
6	2	40 PERCENT	7.90	111.4	1274	30.00	.00	30.00	180.00	-.00

T-INF (DEG R)	P-INF (PSIA)	Q-INF (PSIA)	V-INF (FT/SEC)	RHO-INF (SLUGS/FT3)	MU-INF (LB-SEC/FT2)	RE/FT (FT-1)	HREF (R= .0175FT)	STREF (R= .0175FT)
94.5	.012	.541	3763	1.099E-05	7.608E-08	5.435E 05	1.800E-02	5.488E-02

CAMERA TOF(T)	ROLL NO	PAINT TEMP (DEG F)	INITIAL TEMP (DEG F)	SQUARE ROOT (RHOXCXK)	TBAR(TO)	BETA(TO)
	314	131	88	.0486	0	0

	PIC NO	TIME	DELTIME	H(TO)	H(TO)/HREF	H(.9TO)	H(.9TO)/HREF	H(.867TO)	H(.867TO)/HREF	ST(TO)
T	6690(131)	.03		MODEL HAS NOT REACHED CENTERLINE						
T	6691(131)	1.00		MODEL HAS NOT REACHED CENTERLINE						
T	6692(131)	2.03		MODEL HAS NOT REACHED CENTERLINE						
INJECT TIME =		2.05								
T	6693(131)	3.05	1.90	1.941E-03	.1078	2.381E-03	.1322	2.572E-03	.1429	5.862E-03
T	6694(131)	4.08	2.93	1.564E-03	.0869	1.919E-03	.1066	2.073E-03	.1151	4.725E-03
T	6695(131)	5.13	3.98	1.342E-03	.0745	1.646E-03	.0914	1.778E-03	.0988	4.053E-03
T	6696(131)	6.18	5.03	1.193E-03	.0663	1.464E-03	.0813	1.582E-03	.0878	3.601E-03
T	6697(131)	7.23	6.08	1.085E-03	.0603	1.331E-03	.0739	1.438E-03	.0799	3.275E-03
T	6698(131)	8.26	7.11	1.004E-03	.0557	1.231E-03	.0684	1.331E-03	.0739	3.029E-03
T	6699(131)	9.31	8.16	9.371E-04	.0520	1.149E-03	.0638	1.242E-03	.0689	2.828E-03
T	6700(131)	10.36	9.21	8.820E-04	.0489	1.082E-03	.0600	1.169E-03	.0649	2.659E-03
T	6701(131)	11.41	10.26	8.356E-04	.0464	1.025E-03	.0569	1.107E-03	.0614	2.519E-03
T	6702(131)	12.44	11.29	7.967E-04	.0442	9.772E-04	.0542	1.056E-03	.0586	2.400E-03
T	6703(131)	13.49	12.34	7.620E-04	.0423	9.346E-04	.0518	1.010E-03	.0560	2.295E-03
T	6704(131)	14.54	13.39	7.315E-04	.0406	8.972E-04	.0498	9.694E-04	.0538	2.203E-03
T	6705(131)	15.59	14.44	7.044E-04	.0391	8.639E-04	.0479	9.334E-04	.0518	2.122E-03
T	6706(131)	16.62	15.47	6.806E-04	.0377	8.347E-04	.0463	9.019E-04	.0500	2.048E-03
T	6707(131)	17.67	16.52	6.586E-04	.0365	8.077E-04	.0448	8.727E-04	.0484	1.982E-03
T	6708(131)	18.72	17.57	6.386E-04	.0354	7.832E-04	.0434	8.462E-04	.0469	1.922E-03
T	6709(131)	19.77	18.62	6.203E-04	.0344	7.608E-04	.0422	8.220E-04	.0456	1.865E-03
T	6710(131)	20.80	19.65	6.039E-04	.0335	7.406E-04	.0410	8.002E-04	.0443	1.816E-03
T	6711(131)	21.85	20.70	5.883E-04	.0326	7.216E-04	.0400	7.797E-04	.0432	1.769E-03
T	6712(131)	22.90	21.75	5.739E-04	.0318	7.039E-04	.0390	7.606E-04	.0422	1.726E-03
T	6713(131)	23.93	22.78	5.609E-04	.0311	6.879E-04	.0381	7.433E-04	.0412	1.685E-03
T	6714(131)	24.98	23.83	5.484E-04	.0304	6.725E-04	.0373	7.267E-04	.0403	1.647E-03

****
* UNCLASSIFIED *
****

8/21/74

NASA-RI STS OH25A

AEDC(ARO,INC.) ARNOLD AFS, TENNESSEE
VON KARMAN GAS DYNAMICS FACILITY
50 INCH HYPERSONIC TUNNEL B

V418-83A

GROUP	CONFIG	MODEL	MACH NO	PO(PSIA)	TO(DEG R)	ALPHA-MODEL	ALPHA-SECTOR	ALPHA-PREBEND	ROLL-MODEL	YAW
6	2	40 PERCENT	7.90	112.1	1274	30.00	.00	30.00	180.00	-.00

T-INF (DEG R)	P-INF (PSIA)	Q-INF (PSIA)	V-INF (FT/SEC)	RHO-INF (SLUGS/FT3)	MU-INF (LB-SEC/FT2)	RE/FT (FT-1)	HREF (R= .0175FT)	STREF (R= .0175FT)
94.5	.012	.544	3763	1.105E-05	7.610E-08	5.467E 05	1.805E-02	5.472E-02

CAMERA TOP(T)	ROLL NO	PAINT TEMP (DEG F)	INITIAL TEMP (DEG F)	SQUARE ROOT (RHOXCXK)	TBAR(TO)	BETA(TO)
	214	131	88	.0486	5.926E-02	5.5075E-02

	PIC NO	TIME	DELTIME	H(TO)	H(TO)/HREF	H(.9TO)	H(.9TO)/HREF	H(.867TO)	H(.867TO)/HREF	ST(TO)
T	6715(131)	26.03	24.88	5.366E-04	.0297	6.582E-04	.0365	7.112E-04	.0394	1.612E-03
T	6716(131)	27.08	25.93	5.256E-04	.0291	6.447E-04	.0357	6.966E-04	.0386	1.579E-03
T	6717(131)	28.13	26.98	5.153E-04	.0285	6.320E-04	.0350	6.829E-04	.0378	1.548E-03
T	6718(131)	29.16	28.01	5.058E-04	.0280	6.203E-04	.0343	6.703E-04	.0371	1.518E-03
T	6719(131)	30.21	29.06	4.965E-04	.0275	6.090E-04	.0337	6.580E-04	.0364	1.490E-03
T	6720(131)	31.26	30.11	4.878E-04	.0270	5.983E-04	.0331	6.464E-04	.0358	1.464E-03
T	6721(131)	32.31	31.16	4.795E-04	.0265	5.881E-04	.0325	6.354E-04	.0352	1.438E-03
		32.69		MODEL HAS LEFT CENTERLINE						
T	6722(131)	33.34	32.19	4.718E-04	.0261	5.787E-04	.0320	6.252E-04	.0346	1.416E-03
T	6723(131)	34.39	33.24	4.643E-04	.0257	5.694E-04	.0315	6.153E-04	.0341	1.394E-03
T	6724(131)	35.44	34.29	4.571E-04	.0253	5.606E-04	.0310	6.058E-04	.0335	1.371E-03

ERROR IN POWRF BASE<0 A = 600100006465321 5 CALL FROM 72651

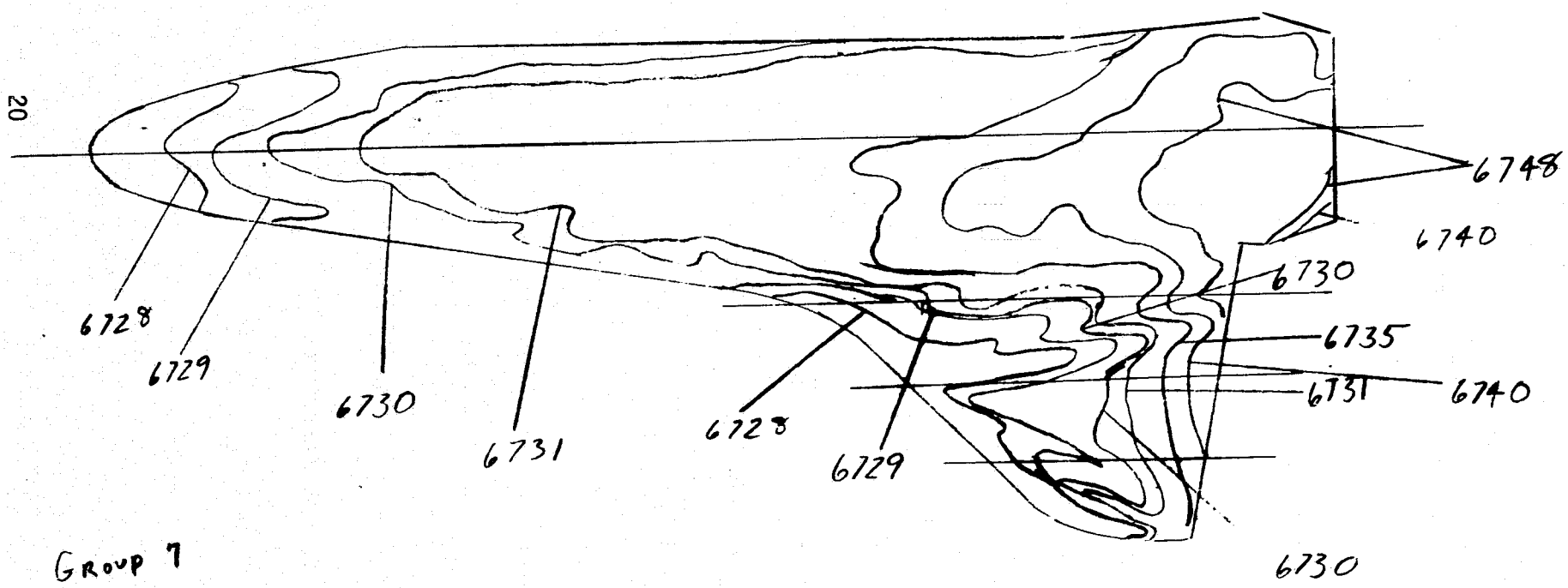

GROUP 7
0314-6728

8/21/74

NASA-RI STS OH25A

V41R-83A

AEDC(ARO,INC.) ARNOLD AFS, TENNESSEE
VON KARMAN GAS DYNAMICS FACILITY
50 INCH HYPERSONIC TUNNEL B

GROUP	CONFIG	MODEL	MACH NO	PO(PSIA)	TO(DEG R)	ALPHA-MODEL	ALPHA-SECTOR	ALPHA-PREBEND	ROLL-MODEL	YAW
7	3	BOCY FLUSH	7.90	111.3	1273	30.01	-.01	30.00	180.00	-.00

T-INF (DEG R)	P-INF (PSIA)	Q-INF (PSIA)	V-INF (FT/SEC)	RHO-INF (SLUGS/FT3)	MU-INF (LB-SEC/FT2)	RE/FT (FT-1)	HREF (R= .0175FT)	STREF (R= .0175FT)
94.5	.012	.540	3762	1.098E-05	7.604E-08	5.434E 05	1.799E-02	5.489E-02

CAMERA	ROLL NO	PAINT TEMP (DEG F)	INITIAL TEMP (DEG F)	SQUARE ROOT (RHOXCXK)	TBAR(TO)	BETA(TO)
TOP(T)	314	131	82	.0486	0	0

	PIC NO	TIME	DELTIME	H(TO)	H(TO)/HREF	H(.9TO)	H(.9TO)/HREF	H(.867TO)	H(.867TO)/HREF	ST(TO)
T	6725(131)	.03		MODEL HAS NOT REACHED CENTERLINE						
T	6726(131)	1.00		MODEL HAS NOT REACHED CENTERLINE						
T	6727(131)	2.03		MODEL HAS NOT REACHED CENTERLINE						
INJECT TIME =		2.18								
T	6728(131)	3.05	1.83	2.253E-03	.1252	2.761E-03	.1534	2.983E-03	.1658	6.809E-03
T	6729(131)	4.10	2.88	1.796E-03	.0999	2.201E-03	.1223	2.378E-03	.1321	5.427E-03
T	6730(131)	5.13	3.91	1.542E-03	.0857	1.890E-03	.1050	2.042E-03	.1134	4.657E-03
T	6731(131)	6.18	4.96	1.369E-03	.0761	1.678E-03	.0932	1.813E-03	.1007	4.134E-03
T	6732(131)	7.21	5.99	1.246E-03	.0692	1.527E-03	.0848	1.650E-03	.0916	3.760E-03
T	6733(131)	8.26	7.04	1.149E-03	.0638	1.408E-03	.0782	1.522E-03	.0845	3.467E-03
T	6734(131)	9.31	8.09	1.072E-03	.0595	1.314E-03	.0729	1.419E-03	.0788	3.231E-03
T	6735(131)	10.34	9.11	1.010E-03	.0561	1.238E-03	.0687	1.337E-03	.0742	3.044E-03
T	6736(131)	11.39	10.17	9.564E-04	.0531	1.172E-03	.0650	1.266E-03	.0703	2.882E-03
T	6737(131)	12.41	11.19	9.115E-04	.0506	1.117E-03	.0620	1.207E-03	.0669	2.744E-03
T	6738(131)	13.47	12.24	8.715E-04	.0483	1.068E-03	.0592	1.154E-03	.0640	2.624E-03
T	6739(131)	14.52	13.29	8.363E-04	.0464	1.025E-03	.0568	1.107E-03	.0614	2.516E-03
T	6740(131)	15.54	14.32	8.058E-04	.0447	9.873E-04	.0547	1.067E-03	.0591	2.424E-03
T	6741(131)	16.59	15.37	7.777E-04	.0431	9.529E-04	.0528	1.030E-03	.0571	2.338E-03
T	6742(131)	17.62	16.40	7.530E-04	.0418	9.226E-04	.0512	9.968E-04	.0553	2.265E-03
T	6743(131)	18.67	17.45	7.300E-04	.0405	8.944E-04	.0496	9.663E-04	.0536	2.194E-03
T	6744(131)	19.72	18.50	7.089E-04	.0393	8.686E-04	.0481	9.385E-04	.0520	2.131E-03
T	6745(131)	20.75	19.53	6.901E-04	.0382	8.455E-04	.0468	9.135E-04	.0506	2.072E-03
T	6746(131)	21.80	20.58	6.722E-04	.0372	8.236E-04	.0456	8.898E-04	.0493	2.019E-03
T	6747(131)	22.85	21.63	6.557E-04	.0363	8.034E-04	.0445	8.679E-04	.0481	1.969E-03
T	6748(131)	23.90	22.68	6.403E-04	.0355	7.845E-04	.0434	8.476E-04	.0469	1.921E-03
T	6749(131)	24.93	23.71	6.263E-04	.0347	7.674E-04	.0425	8.290E-04	.0459	1.879E-03

****
* UNCLASSIFIED *
****

8/21/74

NASA-RI STS OH25A

V418-83A

AEDC(ARO,INC.) ARNOLD AFS, TENNESSEE
VON KARMAN GAS DYNAMICS FACILITY
50 INCH HYPERSONIC TUNNEL A

GROUP	CONFIG	MODEL	MACH NO	PO(PSIA)	TO(DEG R)	ALPHA-MODEL	ALPHA-SECTOR	ALPHA-PREBEND	ROLL-MODEL	YAW
7	3	BODY FLUSH	7.90	112.2	1273	30.01	-.01	30.00	180.00	-.00

T-INF (DEG R)	P-INF (PSIA)	Q-INF (PSIA)	V-INF (FT/SEC)	RHO-INF (SLUGS/FT3)	MU-INF (LB-SEC/FT2)	RE/FT (FT-1)	HREF (R= .0175FT)	STREF (R= .0175FT)
94.4	.012	.545	3762	1.107E-05	7.604E-08	5.478E 05	1.806E-02	5.466E-02

CAMERA	ROLL NO	PAINT TEMP (DEG F)	INITIAL TEMP (DEG F)	SQUARE ROOT (RHOXCXK)	TBAR(TO)	BETA(TO)
TOP(T)	314	131	82	.0486	6.704E-02	6.2742E-02

	PIC NO	TIME	DELTIME	H(TO)	H(TO)/HREF	H(.9TO)	H(.9TO)/HREF	H(.867TO)	H(.867TO)/HREF	ST(TO)
T	6750(131)	25.98	24.76	6.128E-04	.0339	7.509E-04	.0416	8.112E-04	.0449	1.839E-03
T	6751(131)	27.03	25.81	6.002E-04	.0332	7.354E-04	.0407	7.946E-04	.0440	1.799E-03
T	6752(131)	28.06	26.83	5.886E-04	.0326	7.212E-04	.0399	7.792E-04	.0431	1.763E-03
T	6753(131)	29.11	27.89	5.774E-04	.0319	7.075E-04	.0391	7.644E-04	.0423	1.728E-03
T	6754(131)	30.16	28.94	5.668E-04	.0314	6.945E-04	.0384	7.504E-04	.0415	1.698E-03
		31.19		MODEL HAS LEFT CENTERLINE						
T	6755(131)	31.21	29.99	5.568E-04	.0308	6.823E-04	.0377	7.371E-04	.0407	1.665E-03
T	6756(131)	32.24	31.01	5.475E-04	.0303	6.709E-04	.0371	7.248E-04	.0401	1.637E-03
T	6757(131)	33.29	32.07	5.385E-04	.0298	6.598E-04	.0365	7.128E-04	.0394	1.610E-03

ERROR IN FORRF BASE<0 A = 6001000000001017 CALL FROM 72651

GROUP 8

0373 - 6873

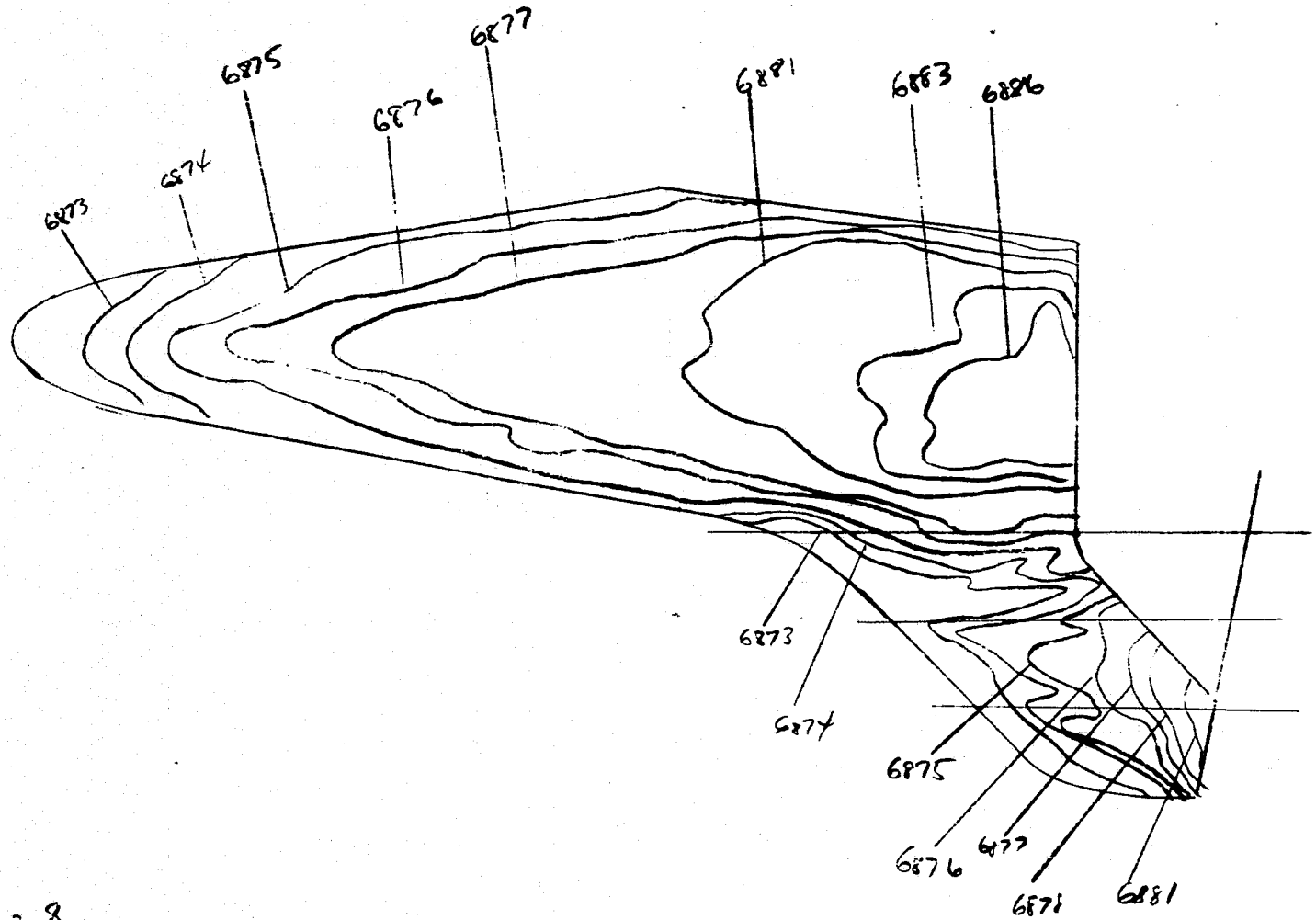

GROUP 8

0373 - 6873

8/21/74

NASA-RI STS OH25A

V418-83A

AEDC(ARO,INC.) ARNOLD AFS, TENNESSEE
VON KARMAN GAS DYNAMICS FACILITY
50 INCH HYPERSONIC TUNNEL B

GROUP	CONFIG	MODEL	MACH.NO	PO(PSIA)	TO(DEG R)	ALPHA-MODEL	ALPHA-SECTOR	ALPHA-PREBEND	ROLL-MODEL	YAW
8	4	LEADING EDGE	7.90	111.6	1273	30.00	0	30.00	180.00	-.00

T-INF (DEG R)	P-INF (PSIA)	Q-INF (PSIA)	V-INF (FT/SEC)	RHO-INF (SLUGS/FT3)	MU-INF (LB-SEC/FT2)	RE/FT (FT-1)	HREF (R= .0175FT)	STREF (R= .0175FT)
94.4	.012	.542	3761	1.102E-05	7.600E-08	5.453E 05	1.801E-02	5.480E-02

CAMERA	ROLL NO	PAINT TEMP (DEG F)	INITIAL TEMP (DEG F)	SQUARE ROOT (RHOXCXK)	TBAR(TO)	BETA(TO)
TOP(T)	373	131	84	.0486	0	0

	PIC NO	TIME	DELTIME	H(TO)	H(TO)/HREF	H(.9TO)	H(.9TO)/HREF	H(.867TO)	H(.867TO)/HREF	ST(TO)
T	6870(131)	.73		MODEL HAS NOT REACHED CENTERLINE						
T	6871(131)	1.75		MODEL HAS NOT REACHED CENTERLINE						
INJECT TIME =		2.08								
T	6872(131)	2.80	1.64	2.288E-03	.1270	2.805E-03	.1557	3.031E-03	.1682	6.893E-03
T	6873(131)	3.83	2.66	1.794E-03	.0995	2.199E-03	.1220	2.376E-03	.1318	5.399E-03
T	6874(131)	4.88	3.71	1.519E-03	.0843	1.862E-03	.1033	2.012E-03	.1116	4.572E-03
T	6875(131)	5.91	4.74	1.344E-03	.0746	1.648E-03	.0914	1.781E-03	.0988	4.047E-03
T	6876(131)	6.96	5.79	1.216E-03	.0675	1.491E-03	.0827	1.611E-03	.0894	3.661E-03
T	6877(131)	8.01	6.84	1.119E-03	.0621	1.372E-03	.0761	1.482E-03	.0822	3.368E-03
T	6878(131)	9.04	7.87	1.043E-03	.0579	1.279E-03	.0709	1.382E-03	.0767	3.138E-03
T	6879(131)	10.09	8.92	9.800E-04	.0543	1.202E-03	.0666	1.298E-03	.0720	2.948E-03
T	6880(131)	11.11	9.95	9.281E-04	.0514	1.138E-03	.0631	1.230E-03	.0682	2.789E-03
T	6881(131)	12.16	11.00	8.826E-04	.0489	1.082E-03	.0600	1.169E-03	.0648	2.652E-03
T	6882(131)	13.22	12.05	8.432E-04	.0467	1.034E-03	.0573	1.117E-03	.0619	2.532E-03
T	6883(131)	14.24	13.08	8.094E-04	.0448	9.925E-04	.0550	1.072E-03	.0594	2.430E-03
T	6884(131)	15.29	14.13	7.787E-04	.0431	9.548E-04	.0529	1.032E-03	.0572	2.338E-03
T	6885(131)	16.32	15.15	7.519E-04	.0416	9.219E-04	.0511	9.962E-04	.0552	2.256E-03
T	6886(131)	17.37	16.20	7.271E-04	.0403	8.915E-04	.0494	9.634E-04	.0534	2.181E-03
T	6887(131)	18.42	17.25	7.046E-04	.0390	8.640E-04	.0478	9.336E-04	.0517	2.114E-03
T	6888(131)	19.45	18.28	6.846E-04	.0379	8.394E-04	.0465	9.070E-04	.0502	2.052E-03
T	6889(131)	20.50	19.33	6.657E-04	.0369	8.162E-04	.0452	8.820E-04	.0488	1.995E-03
T	6890(131)	21.55	20.38	6.483E-04	.0359	7.949E-04	.0440	8.589E-04	.0475	1.943E-03
T	6891(131)	22.58	21.41	6.326E-04	.0350	7.756E-04	.0429	8.381E-04	.0464	1.894E-03
T	6892(131)	23.63	22.46	6.176E-04	.0342	7.572E-04	.0419	8.183E-04	.0453	1.851E-03
		24.68		MODEL HAS LEFT CENTERLINE						
T	6893(131)	24.68	23.51	6.036E-04	.0334	7.401E-04	.0410	7.998E-04	.0443	1.807E-03

```
                                    ****************
                                    * UNCLASSIFIED *
                                    ****************
                                         8/21/74

NASA-RI STS OH25A                    AEDC(ARO,INC.) ARNOLD AFS, TENNESSEE
                                      VON KARMAN GAS DYNAMICS FACILITY
V41B-83A                                 50 INCH HYPERSONIC TUNNEL B

GROUP  CONFIG    MODEL      MACH NO    PO(PSIA)  TO(DEG R)  ALPHA-MODEL  ALPHA-SECTOR  ALPHA-PREBEND  ROLL-MODEL  YAW
  B      4   LEADING EDGE    7.90      112.4      1273        30.00           0          30.00        180.00      -.00

 T-INF    P-INF    Q-INF    V-INF     RHO-INF      MU-INF        RE/FT      HREF          STREF
(DEG R)  (PSIA)   (PSIA)   (FT/SEC)  (SLUGS/FT3)  (LB-SEC/FT2)  (FT-1)    (R= .0175FT)  (R= .0175FT)
 94.4     .012     .546     3761     1.110E-05    7.599E-08   5.493E 05   1.807E-02     5.460E-02

CAMERA        ROLL NO  PAINT TEMP (DEG F)   INITIAL TEMP (DEG F)   SQUARE ROOT (RHOXCXK)    TBAR(TO)   BETA(TO)
TOP(T)          373
                          131                  84                   .0486                   6.449E-02  6.0225E-02

   PIC NO     TIME DELTIME     H(TO)      H(TO)/HREF   H(.9TO)    H(.9TO)/HREF H( .867TO)  H( .867TO)/HREF  ST(TO)
T  6894(131) 25.70  24.54     5.909E-04     .0327     7.245E-04     .0401      7.829E-04     .0433       1.769E-03
T  6895(131) 26.76  25.59     5.786E-04     .0320     7.094E-04     .0393      7.666E-04     .0424       1.732E-03
T  6896(131) 27.81  26.64     5.671E-04     .0314     6.953E-04     .0385      7.513E-04     .0416       1.696E-03
      ERROR IN POWRF  BASE<0      A = 6001241612743472 CALL FROM 72651
```

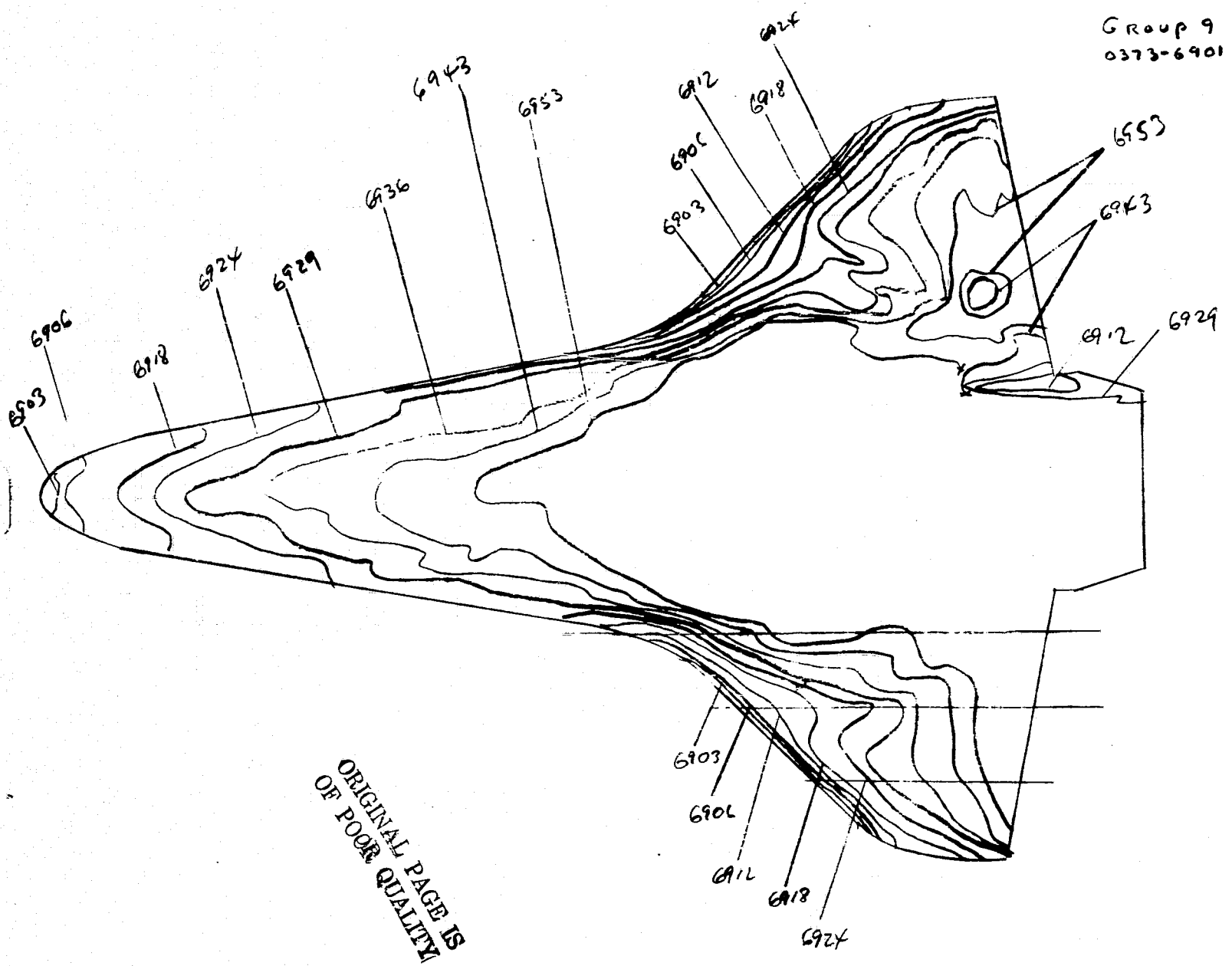

ORIGINAL PAGE IS
OF POOR QUALITY

8/21/74

NASA-RI STS OH25A

V41B-83A

AEDC(ARO,INC.) ARNOLD AFS, TENNESSEE
VON KARMAN GAS DYNAMICS FACILITY
50 INCH HYPERSONIC TUNNEL B

GROUP	CONFIG	MODEL	MACH NO	PO(PSIA)	TO(DEG R)	ALPHA-MODEL	ALPHA-SECTOR	ALPHA-PREBEND	ROLL-MODEL	YAW
9	1	OREITER	7.90	111.7	1272	40.00	-10.00	30.00	180.00	-.00

T-INF (DEG R)	P-INF (PSIA)	Q-INF (PSIA)	V-INF (FT/SEC)	RHO-INF (SLUGS/FT3)	MU-INF (LB-SEC/FT2)	RE/FT (FT-1)	HREF (R= .0175FT)	STREF (R= .0175FT)
94.3	.012	.542	3760	1.104E-05	7.595E-08	5.463E 05	1.801E-02	5.475E-02

CAMERA	ROLL NO	PAINT TEMP (DEG F)	INITIAL TEMP (DEG F)	SQUARE ROOT (RHOACXK)	TBAR(TO)	BETA(TO)
TOP(T)	373	250	82	.0535	0	0

	PIC NO	TIME	DELTIME	H(TO)	H(TO)/HREF	H(.9TO)	H(.9TO)/HREF	H(.867TO)	H(.867TO)/HREF	ST(TO)
T	6998(250)	.03		MODEL HAS NOT REACHED CENTERLINE						
T	6999(250)	1.00		MODEL HAS NOT REACHED CENTERLINE						
T	6900(250)	2.00		MODEL HAS NOT REACHED CENTERLINE						
INJECT TIME =		2.20								
T	6901(250)	3.05	1.82	9.948E-03	.5520	1.269E-02	.7040	1.396E-02	.7744	2.975E-02
T	6902(250)	4.08	2.84	7.953E-03	.4411	1.014E-02	.5625	1.116E-02	.6188	2.376E-02
T	6903(250)	5.13	3.89	6.795E-03	.3769	8.666E-03	.4806	9.533E-03	.5287	2.030E-02
T	6904(250)	6.16	4.92	6.045E-03	.3353	7.710E-03	.4276	8.481E-03	.4704	1.806E-02
T	6905(250)	7.21	5.97	5.488E-03	.3043	6.998E-03	.3881	7.699E-03	.4270	1.640E-02
T	6906(250)	8.26	7.02	5.060E-03	.2806	6.453E-03	.3579	7.099E-03	.3937	1.512E-02
T	6907(250)	9.29	8.05	4.727E-03	.2621	6.028E-03	.3343	6.631E-03	.3678	1.412E-02
T	6908(250)	10.34	9.10	4.445E-03	.2464	5.669E-03	.3143	6.236E-03	.3457	1.327E-02
T	6909(250)	11.39	10.15	4.209E-03	.2333	5.368E-03	.2976	5.905E-03	.3273	1.256E-02
T	6910(250)	12.41	11.18	4.011E-03	.2223	5.115E-03	.2836	5.627E-03	.3119	1.197E-02
T	6911(250)	13.47	12.23	3.835E-03	.2127	4.890E-03	.2712	5.380E-03	.2984	1.146E-02
T	6912(250)	14.49	13.26	3.683E-03	.2042	4.697E-03	.2604	5.167E-03	.2864	1.100E-02
T	6913(250)	15.54	14.31	3.545E-03	.1965	4.521E-03	.2507	4.974E-03	.2757	1.058E-02
T	6914(250)	16.59	15.36	3.422E-03	.1898	4.364E-03	.2420	4.801E-03	.2662	1.022E-02
T	6915(250)	17.62	16.38	3.313E-03	.1837	4.225E-03	.2342	4.648E-03	.2577	9.890E-03
T	6916(250)	18.67	17.43	3.212E-03	.1780	4.096E-03	.2271	4.506E-03	.2498	9.587E-03
T	6917(250)	19.72	18.49	3.119E-03	.1729	3.978E-03	.2205	4.376E-03	.2426	9.310E-03
T	6918(250)	20.75	19.51	3.036E-03	.1683	3.872E-03	.2146	4.259E-03	.2361	9.062E-03
T	6919(250)	21.80	20.56	2.957E-03	.1639	3.771E-03	.2091	4.149E-03	.2300	8.828E-03
T	6920(250)	22.83	21.59	2.886E-03	.1599	3.681E-03	.2039	4.049E-03	.2244	8.608E-03
T	6921(250)	23.88	22.64	2.818E-03	.1562	3.594E-03	.1992	3.954E-03	.2192	8.413E-03
T	6922(250)	24.93	23.69	2.755E-03	.1527	3.514E-03	.1948	3.865E-03	.2143	8.224E-03

8/21/74

NASA-RI STS OH25A

V418-83A

AEDC(ARO,INC.) ARNOLD AFS, TENNESSEE
VON KARMAN GAS DYNAMICS FACILITY
50 INCH HYPERSONIC TUNNEL B

GROUP	CONFIG	MODEL	MACH NO	PO(PSIA)	TO(DEG R)	ALPHA-MODEL	ALPHA-SECTOR	ALPHA-PREBEND	ROLL-MODEL	YAW
9	1	OREI[illegible]	7.90	112.0	1272	40.00	-10.00	30.00	180.00	-.00

T-INF (DEG R)	P-INF (PSIA)	Q-INF (PSIA)	V-INF (FT/SEC)	RHO-INF (SLUGS/FT3)	MU-INF (LB-SEC/FT2)	RE/FT (FT-1)	HREF (R= .0175FT)	SIREF (R= .0175FT)
94.4	.012	.544	3760	1.106E-05	7.596E-08	5.477E 05	1.804E-02	5.468E-02

CAMERA TOP(T)	ROLL NO	PAINT TEMP (DEG F)	INITIAL TEMP (DEG F)	SQUARE ROOT (RHOXCXK)	TBAR(TO)	BETA(TO)
	373	250	82	.0535	2.301E-01	2.5065E-01

	PIC NO	TIME	DELTIME	H(TO)	H(TO)/HREF	H(.9TO)	H(.9TO)/HREF	H(.867TO)	H(.867TO)/HREF	ST(TO)
T	6923(250)	25.95	24.72	2.697E-03	.1495	3.440E-03	.1906	3.784E-03	.2097	8.045E-03
T	6924(250)	27.01	25.77	2.642E-03	.1464	3.369E-03	.1868	3.706E-03	.2054	7.885E-03
T	6925(250)	28.03	26.80	2.591E-03	.1436	3.304E-03	.1831	3.634E-03	.2015	7.734E-03
T	6926(250)	29.08	27.85	2.541E-03	.1409	3.241E-03	.1797	3.565E-03	.1976	7.586E-03
T	6927(250)	30.13	28.90	2.495E-03	.1383	3.181E-03	.1764	3.500E-03	.1940	7.447E-03
T	6928(250)	31.16	29.92	2.451E-03	.1358	3.126E-03	.1732	3.439E-03	.1906	7.311E-03
T	6929(250)	32.21	30.99	2.409E-03	.1335	3.073E-03	.1703	3.380E-03	.1873	7.186E-03
T	6930(250)	33.24	32.00	2.371E-03	.1314	3.023E-03	.1676	3.326E-03	.1844	7.076E-03
T	6931(250)	34.29	33.05	2.333E-03	.1293	2.975E-03	.1649	3.272E-03	.1814	6.962E-03
T	6932(250)	35.34	34.10	2.296E-03	.1273	2.928E-03	.1623	3.222E-03	.1786	6.854E-03
T	6933(250)	36.37	35.13	2.262E-03	.1254	2.885E-03	.1600	3.174E-03	.1760	6.754E-03
T	6934(250)	37.42	36.18	2.229E-03	.1236	2.843E-03	.1576	3.128E-03	.1734	6.655E-03
T	6935(250)	38.47	37.23	2.198E-03	.1218	2.803E-03	.1554	3.083E-03	.1709	6.560E-03
T	6936(250)	39.50	38.26	2.168E-03	.1202	2.765E-03	.1533	3.042E-03	.1686	6.472E-03
T	6937(250)	40.55	39.31	2.139E-03	.1186	2.728E-03	.1512	3.001E-03	.1663	6.385E-03
T	6938(250)	41.57	40.34	2.111E-03	.1170	2.693E-03	.1492	2.962E-03	.1641	6.297E-03
T	6939(250)	42.62	41.39	2.084E-03	.1156	2.658E-03	.1474	2.924E-03	.1621	6.222E-03
T	6940(250)	43.68	42.44	2.058E-03	.1141	2.625E-03	.1455	2.888E-03	.1601	6.144E-03
T	6941(250)	44.70	43.46	2.034E-03	.1128	2.594E-03	.1438	2.854E-03	.1582	6.072E-03
T	6942(250)	45.75	44.52	2.010E-03	.1114	2.563E-03	.1420	2.820E-03	.1562	5.994E-03
T	6943(250)	46.80	45.57	1.987E-03	.1101	2.533E-03	.1404	2.787E-03	.1545	5.930E-03
T	6944(250)	47.83	46.59	1.965E-03	.1089	2.505E-03	.1389	2.756E-03	.1528	5.864E-03
T	6945(250)	48.88	47.64	1.943E-03	.1077	2.478E-03	.1374	2.726E-03	.1511	5.799E-03
T	6946(250)	49.91	48.67	1.922E-03	.1066	2.451E-03	.1359	2.697E-03	.1495	5.738E-03
T	6947(250)	50.96	49.72	1.902E-03	.1054	2.425E-03	.1345	2.668E-03	.1479	5.676E-03

****
* UNCLASSIFIED *
****

8/21/74

NASA-RI STS OH25A

V418-83A

AEDC(ARO,INC.) ARNOLD AFS, TENNESSEE
VON KARMAN GAS DYNAMICS FACILITY
50 INCH HYPERSONIC TUNNEL B

GROUP	CONFIG	MODEL	MACH NO	PO(PSIA)	TO(DEG R)	ALPHA-MODEL	ALPHA-SECTOR	ALPHA-PREBEND	ROLL-MODEL	YAW
9	1	OREITER	7.90	112.0	1272	40.00	-10.00	30.00	180.00	-.00

T-INF (DEG R)	P-INF (PSIA)	Q-INF (PSIA)	V-INF (FT/SEC)	RHO-INF (SLUGS/FT3)	MU-INF (LB-SEC/FT2)	RE/FT (FT-1)	HREF (R= .0175FT)	STREF (R= .0175FT)
94.3	.012	.544	3760	1.107E-05	7.594E-08	5.479E 05	1.804E-02	5.467E-02

CAMERA (OP(T)	ROLL NO	PAINT TEMP (DEG F)	INITIAL TEMP (DEG F)	SQUARE ROOT (RHOXCXK)	TBAR(TO)	BETA(TO)
	373	250	82	.0535	2.301E-01	2.5065E-01

	PIC NO	TIME	DELTIME	H(TO)	H(TO)/HREF	H(.9TO)	H(.9TO)/HREF	H(.867TO)	H(.867TO)/HREF	ST(TO)
T	6948(250)	52.01	50.77	1.882E-03	.1043	2.400E-03	.1331	2.640E-03	.1464	5.617E-03
T	6949(250)	53.04	51.80	1.863E-03	.1033	2.376E-03	.1317	2.614E-03	.1449	5.561E-03
T	6950(250)	54.09	52.85	1.845E-03	.1023	2.352E-03	.1304	2.588E-03	.1435	5.506E-03
T	6951(250)	55.11	53.88	1.827E-03	.1013	2.330E-03	.1292	2.563E-03	.1421	5.454E-03
T	6952(250)	56.16	54.93	1.809E-03	.1003	2.308E-03	.1279	2.538E-03	.1407	5.401E-03
T	6953(250)	57.22	55.98	1.792E-03	.0994	2.286E-03	.1267	2.514E-03	.1394	5.350E-03
T	6954(250)	58.24	57.01	1.776E-03	.0985	2.265E-03	.1256	2.492E-03	.1381	5.302E-03
		59.19		MODEL HAS LEFT CENTERLINE						
T	6955(250)	59.29	58.06	1.760E-03	.0976	2.244E-03	.1244	2.469E-03	.1369	5.253E-03
T	6956(250)	60.34	59.11	1.744E-03	.0967	2.224E-03	.1233	2.447E-03	.1357	5.206E-03
T	6957(250)	61.37	60.13	1.729E-03	.0959	2.205E-03	.1223	2.426E-03	.1345	5.162E-03

ERROR IN POWRF BASE<0 A = 6001242214734237 CALL FROM 72651

D375-10761

GROUP 10

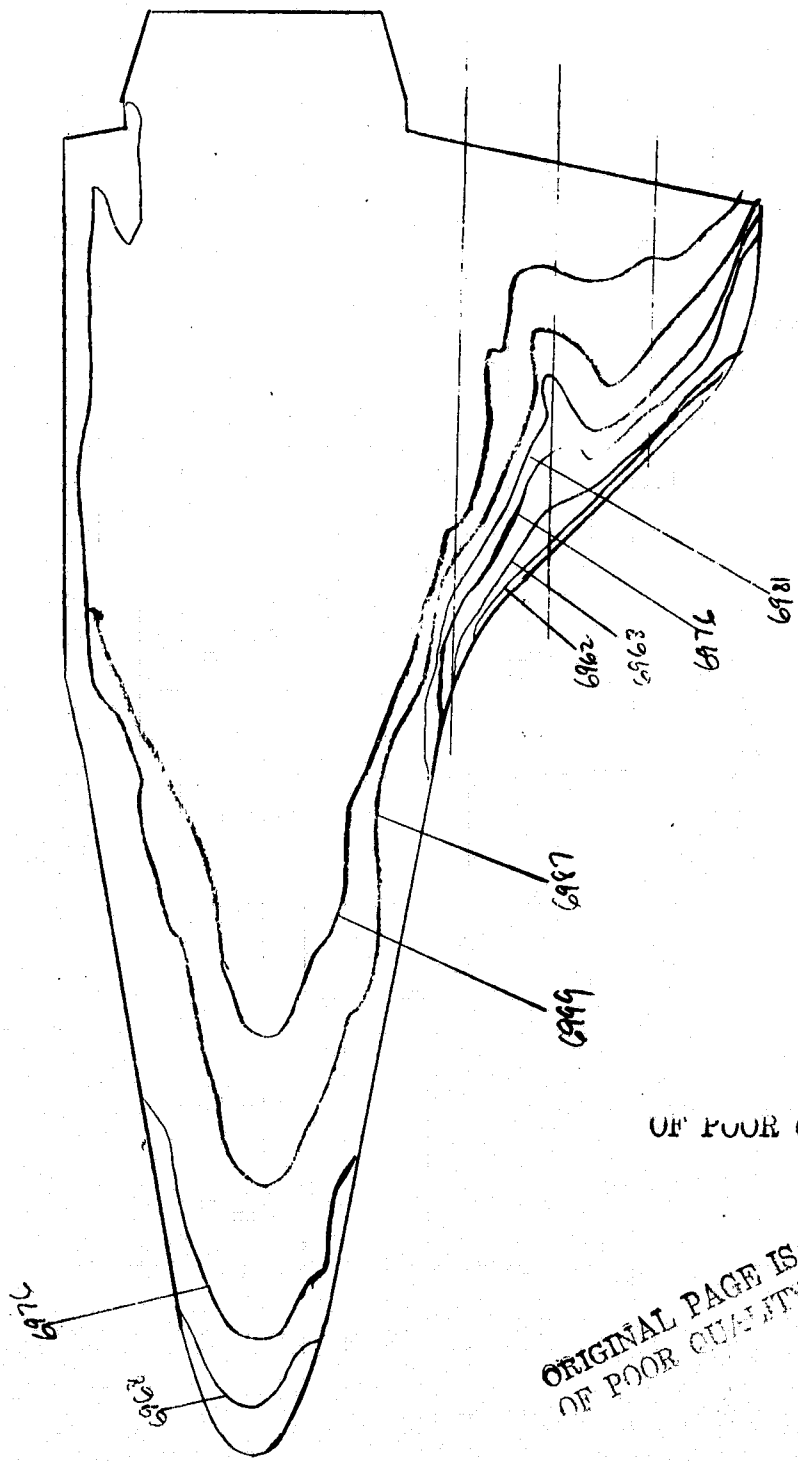

PAGE IS
OF POOR QUALITY

ORIGINAL PAGE IS
OF POOR QUALITY

8/21/74

NASA-RI STS OH25A

V41B-83A

AEDC(ARO,INC.) ARNOLD AFS, TENNESSEE
VON KARMAN GAS DYNAMICS FACILITY
50 INCH HYPERSONIC TUNNEL B

GROUP	CONFIG	MODEL	MACH-NO	PO(PSIA)	TO(DEG R)	ALPHA-MODEL	ALPHA-SECTOR	ALPHA-PREBEND	ROLL-MODEL	YAW
10	2	40 PERCENT	7.90	112.1	1272	40.03	-10.03	30.00	180.00	-.00

T-INF (DEG R)	P-INF (PSIA)	Q-INF (PSIA)	V-INF (FT/SEC)	RHO-INF (SLUGS/FT3)	MU-INF (LB-SEC/FT2)	RE/FT (FT-1)	HREF (R= .0175FT)	STREF (R= .0175FT)
94.3	.012	.544	3760	1.108E-05	7.595E-08	5.483E 05	1.805E-02	5.465E-02

CAMERA	ROLL NO	PAINT TEMP (DEG F)	INITIAL TEMP (DEG F)	SQUARE ROOT (RHOXCXK)	TRAR(TO)	BETA(TO)
TOP(T)	373	250	81	.0535	0	0

	PIC NO	TIME	DELTIME	H(TO)	H(TO)/HREF	H(.9TO)	H(.9TO)/HREF	H(.867TO)	H(.867TO)/HREF	ST(TO)
T	6958(250)	.03		MODEL HAS NOT REACHED CENTERLINE						
T	6959(250)	.98		MODEL HAS NOT REACHED CENTERLINE						
T	6960(250)	2.00		MODEL HAS NOT REACHED CENTERLINE						
INJECT TIME =		2.18								
T	6961(250)	3.05	1.83	9.973E-03	.5517	1.272E-02	.7036	1.399E-02	.7741	2.964E-02
T	6962(250)	4.08	2.86	7.984E-03	.4418	1.018E-02	.5635	1.120E-02	.6199	2.375E-02
T	6963(250)	5.13	3.91	6.826E-03	.3776	8.706E-03	.4816	9.578E-03	.5298	2.029E-02
T	6964(250)	6.18	4.96	6.060E-03	.3352	7.729E-03	.4275	8.503E-03	.4703	1.801E-02
T	6965(250)	7.21	5.99	5.516E-03	.3051	7.035E-03	.3891	7.740E-03	.4281	1.639E-02
T	6966(250)	8.26	7.04	5.087E-03	.2813	6.488E-03	.3587	7.138E-03	.3947	1.511E-02
T	6967(250)	9.31	8.09	4.745E-03	.2624	6.052E-03	.3346	6.658E-03	.3681	1.409E-02
T	6968(250)	10.34	9.11	4.470E-03	.2472	5.701E-03	.3152	6.272E-03	.3468	1.327E-02
T	6969(250)	11.39	10.17	4.233E-03	.2340	5.398E-03	.2985	5.939E-03	.3284	1.257E-02
T	6970(250)	12.44	11.22	4.030E-03	.2228	5.139E-03	.2841	5.654E-03	.3126	1.196E-02
T	6971(250)	13.47	12.24	3.857E-03	.2132	4.919E-03	.2719	5.412E-03	.2991	1.144E-02
T	6972(250)	14.52	13.29	3.701E-03	.2046	4.721E-03	.2609	5.193E-03	.2870	1.098E-02
T	6973(250)	15.57	14.35	3.563E-03	.1968	4.544E-03	.2510	4.999E-03	.2762	1.056E-02
T	6974(250)	16.62	15.40	3.439E-03	.1901	4.387E-03	.2424	4.826E-03	.2667	1.020E-02
T	6975(250)	17.65	16.42	3.330E-03	.1840	4.247E-03	.2347	4.673E-03	.2582	9.879E-03
T	6976(250)	18.70	17.47	3.228E-03	.1783	4.118E-03	.2275	4.530E-03	.2502	9.569E-03
T	6977(250)	19.75	18.53	3.136E-03	.1732	3.999E-03	.2209	4.399E-03	.2430	9.293E-03
T	6978(250)	20.80	19.58	3.050E-03	.1685	3.890E-03	.2149	4.280E-03	.2364	9.040E-03
T	6979(250)	21.83	20.60	2.973E-03	.1642	3.792E-03	.2095	4.172E-03	.2304	8.813E-03
T	6980(250)	22.88	21.65	2.900E-03	.1602	3.699E-03	.2043	4.069E-03	.2248	8.596E-03
T	6981(250)	23.93	22.71	2.832E-03	.1564	3.612E-03	.1995	3.974E-03	.2194	8.387E-03
T	6982(250)	24.95	23.73	2.770E-03	.1530	3.533E-03	.1951	3.887E-03	.2146	8.205E-03

****
* UNCLASSIFIED *
****

8/21/74

NASA-RI STS OH25A

AEDC(ARO,INC.) ARNOLD AFS, TENNESSEE
VON KARMAN GAS DYNAMICS FACILITY
50 INCH HYPERSONIC TUNNEL B

V418-83A

GROUP	CONFIG	MODEL	MACH.NO	PO(PSIA)	TO(DEG R)	ALPHA-MODEL	ALPHA-SECTOR	ALPHA-PREBEND	ROLL-MODEL	YAW
10	2	40 PERCENT	7.90	112.9	1272	40.03	-10.03	30.00	180.00	-.00

T-INF (DEG R)	P-INF (PSIA)	Q-INF (PSIA)	V-INF (FT/SEC)	RHO-INF (SLUGS/FT3)	MU-INF (LB-SEC/FT2)	RE/FT (FT-1)	HREF (R= .0175FT)	STREF (R= .0175FT)
94.4	.013	.548	3760	1.115E-05	7.596E-08	5.521E 05	1.811E-02	5.446E-02

CAMERA TOP(T)	ROLL NO	PAINT TEMP (DEG F)	INITIAL TEMP (DEG F)	SQUARE ROOT (RHOXCXK)	TBAR(TO)	BETA(TO)
	373	250	81	.0535	2.313E-01	2.5226E-01

	PIC NO	TIME	DELTIME	H(TO)	H(TO)/HREF	H(.9TO)	H(.9TO)/HREF	H(.867TO)	H(.867TO)/HREF	ST(TO)
T	6983(250)	26.00	24.78	2.711E-03	.1497	3.458E-03	.1909	3.804E-03	.2100	8.028E-03
T	6984(250)	27.06	25.83	2.655E-03	.1466	3.386E-03	.1870	3.726E-03	.2057	7.863E-03
T	6985(250)	28.11	26.88	2.603E-03	.1437	3.320E-03	.1833	3.652E-03	.2016	7.708E-03
T	6986(250)	29.13	27.91	2.555E-03	.1410	3.258E-03	.1799	3.584E-03	.1979	7.565E-03
T	6987(250)	30.18	28.96	2.508E-03	.1384	3.198E-03	.1765	3.519E-03	.1942	7.420E-03
T	6988(250)	31.24	30.01	2.463E-03	.1360	3.142E-03	.1735	3.456E-03	.1908	7.295E-03
T	6989(250)	32.26	31.04	2.422E-03	.1337	3.089E-03	.1706	3.399E-03	.1877	7.174E-03
T	6990(250)	33.31	32.09	2.382E-03	.1315	3.038E-03	.1677	3.343E-03	.1845	7.049E-03
T	6991(250)	34.36	33.14	2.344E-03	.1294	2.990E-03	.1650	3.289E-03	.1815	6.936E-03
T	6992(250)	35.42	34.19	2.308E-03	.1274	2.944E-03	.1625	3.238E-03	.1787	6.829E-03
T	6993(250)	36.44	35.22	2.274E-03	.1255	2.900E-03	.1601	3.191E-03	.1761	6.728E-03
T	6994(250)	37.49	36.27	2.241E-03	.1237	2.858E-03	.1577	3.144E-03	.1735	6.630E-03
T	6995(250)	38.54	37.32	2.209E-03	.1219	2.817E-03	.1554	3.100E-03	.1710	6.530E-03
T	6996(250)	39.60	38.37	2.179E-03	.1202	2.779E-03	.1534	3.057E-03	.1687	6.446E-03
T	6997(250)	40.62	39.40	2.150E-03	.1186	2.742E-03	.1513	3.017E-03	.1664	6.356E-03
T	6998(250)	41.67	40.45	2.122E-03	.1171	2.706E-03	.1493	2.977E-03	.1643	6.272E-03
T	6999(250)	42.72	41.50	2.095E-03	.1156	2.672E-03	.1474	2.939E-03	.1622	6.192E-03
T	7000(250)	43.75	42.53	2.069E-03	.1142	2.639E-03	.1456	2.904E-03	.1602	6.117E-03
		44.63		MODEL HAS LEFT CENTERLINE						
T	7001(250)	44.80	43.58	2.044E-03	.1128	2.607E-03	.1438	2.868E-03	.1582	6.043E-03
T	7002(250)	45.85	44.63	2.020E-03	.1114	2.576E-03	.1421	2.834E-03	.1564	5.972E-03
T	7003(250)	46.90	45.68	1.997E-03	.1102	2.547E-03	.1405	2.802E-03	.1546	5.902E-03
T	7004(250)	47.93	46.71	1.975E-03	.1089	2.518E-03	.1389	2.771E-03	.1529	5.837E-03

ERROR IN FOWRF BASE<0 A = 6001000204056033 CALL FROM 72651

GROUP II
0373- 7008

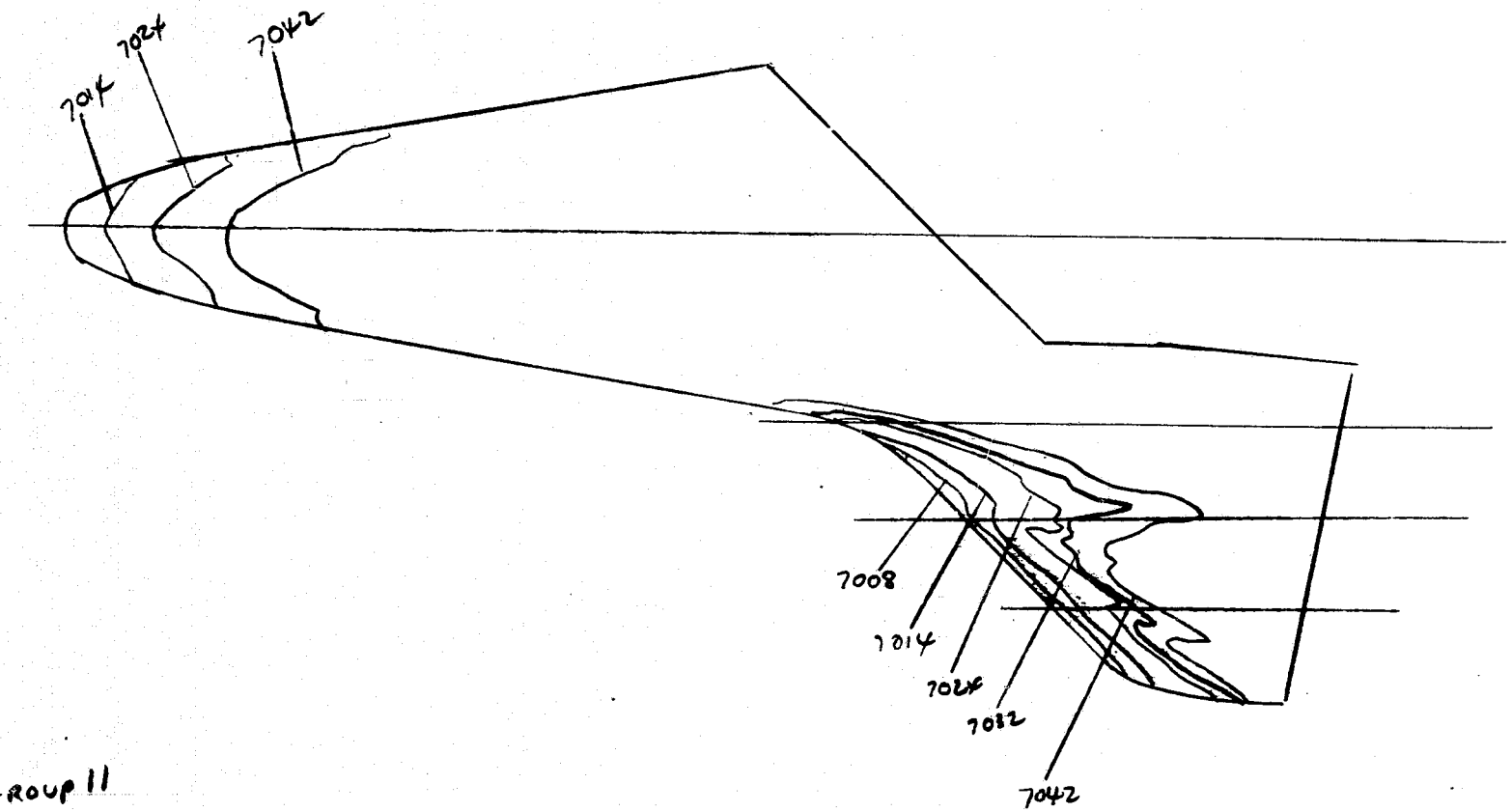

TOO THICK

GROUP II
0373- 7008

8/21/74

NASA-RI STS OH25A

AEDC(ARO,INC.) ARNOLD AFS, TENNESSEE
VON KARMAN GAS DYNAMICS FACILITY
50 INCH HYPERSONIC TUNNEL R

V41B-83A

GROUP	CONFIG	MODEL	MACH NO	PO(PSIA)	TO(DEG R)	ALPHA-MODEL	ALPHA-SECTOR	ALPHA-PREBEND	ROLL-MODEL	YAW
11	5	TRANSITION	7.90	111.9	1272	30.02	-.02	30.00	180.00	-.00

T-INF (DEG R)	P-INF (PSIA)	Q-INF (PSIA)	V-INF (FT/SEC)	RHO-INF (SLUGS/FT3)	MU-INF (LB-SEC/FT2)	RE/FT (FT-1)	HREF (R= .0175FT)	STREF (R= .0175FT)
94.4	.012	.543	3760	1.105E-05	7.597E-08	5.471E 05	1.803E-02	5.471E-02

CAMERA TOP(T)	ROLL NO	PAINT TEMP (DEG F)	INITIAL TEMP (DEG F)	SQUARE ROOT (RHOXCXK)	TBAR(TO)	BETA(TO)
	373	225	79	.0528	0	0

	PIC NO	TIME	DELTIME	H(TO)	H(TO)/HREF	H(.9TO)	H(.9TO)/HREF	H(.867TO)	H(.867TO)/HREF	ST(TO)
T	7005(225)	0		MODEL HAS NOT REACHED CENTERLINE						
T	7006(225)	.98		MODEL HAS NOT REACHED CENTERLINE						
T	7007(225)	2.00		MODEL HAS NOT REACHED CENTERLINE						
INJECT TIME =		2.23								
T	7008(225)	3.05	1.81	8.263E-03	.4577	1.043E-02	.5777	1.142E-02	.6326	2.466E-02
T	7009(225)	4.08	2.83	6.597E-03	.3654	8.326E-03	.4612	9.118E-03	.5050	1.968E-02
T	7010(225)	5.13	3.88	5.633E-03	.3120	7.110E-03	.3938	7.786E-03	.4312	1.681E-02
T	7011(225)	6.18	4.93	4.996E-03	.2767	6.307E-03	.3493	6.906E-03	.3825	1.491E-02
T	7012(225)	7.21	5.96	4.546E-03	.2517	5.738E-03	.3176	6.284E-03	.3479	1.355E-02
T	7013(225)	8.26	7.01	4.191E-03	.2320	5.290E-03	.2929	5.793E-03	.3207	1.249E-02
T	7014(225)	9.31	8.06	3.908E-03	.2164	4.933E-03	.2731	5.402E-03	.2991	1.165E-02
T	7015(225)	10.34	9.09	3.681E-03	.2039	4.646E-03	.2573	5.088E-03	.2818	1.098E-02
T	7016(225)	11.39	10.14	3.485E-03	.1928	4.399E-03	.2433	4.817E-03	.2664	1.037E-02
T	7017(225)	12.44	11.19	3.317E-03	.1835	4.187E-03	.2316	4.585E-03	.2536	9.872E-03
T	7018(225)	13.49	12.24	3.171E-03	.1754	4.003E-03	.2214	4.384E-03	.2425	9.438E-03
T	7019(225)	14.52	13.27	3.046E-03	.1685	3.845E-03	.2127	4.211E-03	.2329	9.066E-03
T	7020(225)	15.57	14.32	2.932E-03	.1622	3.701E-03	.2047	4.053E-03	.2242	8.727E-03
T	7021(225)	16.62	15.37	2.830E-03	.1565	3.572E-03	.1975	3.912E-03	.2163	8.415E-03
T	7022(225)	17.67	16.42	2.738E-03	.1514	3.456E-03	.1911	3.785E-03	.2093	8.142E-03
T	7023(225)	18.70	17.45	2.656E-03	.1468	3.353E-03	.1853	3.672E-03	.2029	7.893E-03
T	7024(225)	19.75	18.50	2.580E-03	.1425	3.256E-03	.1799	3.566E-03	.1970	7.658E-03
T	7025(225)	20.80	19.55	2.510E-03	.1386	3.168E-03	.1750	3.469E-03	.1916	7.449E-03
T	7026(225)	21.85	20.60	2.445E-03	.1350	3.086E-03	.1704	3.379E-03	.1867	7.257E-03
T	7027(225)	22.88	21.63	2.386E-03	.1317	3.012E-03	.1663	3.298E-03	.1821	7.076E-03
T	7028(225)	23.95	22.70	2.329E-03	.1286	2.939E-03	.1623	3.219E-03	.1777	6.906E-03
T	7029(225)	24.98	23.73	2.278E-03	.1257	2.875E-03	.1587	3.149E-03	.1738	6.750E-03

****
* UNCLASSIFIED *
****

8/21/74

NASA-RI STS OH25A

V41B-83A

AEDC(ARO,INC.) ARNOLD AFS, TENNESSEE
VON KARMAN GAS DYNAMICS FACILITY
50 INCH HYPERSONIC TUNNEL B

GROUP	CONFIG	MODEL	MACH NO	PO(PSIA)	TO(DEG R)	ALPHA-MODEL	ALPHA-SECTOR	ALPHA-PREBEND	ROLL-MODEL	YAW
11	5	TRANSITION	7.90	113.0	1272	30.02	-.02	30.00	180.00	-.00

T-INF (DEG R)	P-INF (PSIA)	Q-INF (PSIA)	V-INF (FT/SEC)	RHO-INF (SLUGS/FT3)	MU-INF (LB-SEC/FT2)	RE/FT (FT-1)	HREF (R= .0175FT)	STREF (R= .0175FT)
94.4	.013	.548	3761	1.116E-05	7.598E-08	5.523E 05	1.812E-02	5.445E-02

CAMERA	ROLL NO	PAINT TEMP (DEG F)	INITIAL TEMP (DEG F)	SQUARE ROOT (RHOXCXK)	TBAR(TO)	BETA(TO)
TOP(T)	373	225	79	.0528	1.991E-01	2.1014E-01

	PIC NO	TIME	DELTIME	H(TO)	H(TO)/HREF	H(.9TO)	H(.9TO)/HREF	H(.867TO)	H(.867TO)/HREF	ST(TO)
T	7030(225)	26.03	24.78	2.229E-03	.1230	2.813E-03	.1553	3.081E-03	.1700	6.605E-03
T	7031(225)	27.08	25.83	2.183E-03	.1205	2.756E-03	.1521	3.018E-03	.1665	6.469E-03
T	7032(225)	28.11	26.86	2.141E-03	.1181	2.702E-03	.1491	2.960E-03	.1633	6.339E-03
T	7033(225)	29.16	27.91	2.100E-03	.1159	2.651E-03	.1462	2.903E-03	.1602	6.218E-03
T	7034(225)	30.21	28.96	2.062E-03	.1137	2.602E-03	.1436	2.850E-03	.1572	6.104E-03
T	7035(225)	31.26	30.01	2.025E-03	.1117	2.557E-03	.1410	2.800E-03	.1544	5.997E-03
T	7036(225)	32.29	31.04	1.992E-03	.1098	2.514E-03	.1386	2.753E-03	.1518	5.891E-03
T	7037(225)	33.34	32.09	1.959E-03	.1080	2.472E-03	.1363	2.708E-03	.1493	5.794E-03
T	7038(225)	34.39	33.14	1.927E-03	.1063	2.433E-03	.1341	2.664E-03	.1469	5.701E-03
T	7039(225)	35.44	34.19	1.898E-03	.1046	2.395E-03	.1321	2.623E-03	.1446	5.613E-03
T	7040(225)	36.47	35.22	1.870E-03	.1030	2.360E-03	.1301	2.585E-03	.1424	5.526E-03
T	7041(225)	37.52	36.27	1.842E-03	.1015	2.326E-03	.1292	2.547E-03	.1404	5.445E-03
T	7042(225)	38.57	37.32	1.816E-03	.1001	2.293E-03	.1264	2.511E-03	.1384	5.368E-03
T	7043(225)	39.62	38.37	1.791E-03	.0987	2.261E-03	.1246	2.476E-03	.1365	5.294E-03
T	7044(225)	40.67	39.42	1.767E-03	.0974	2.231E-03	.1229	2.443E-03	.1346	5.223E-03
T	7045(225)	41.70	40.45	1.745E-03	.0962	2.202E-03	.1214	2.412E-03	.1329	5.156E-03
T	7046(225)	42.75	41.50	1.722E-03	.0949	2.174E-03	.1198	2.381E-03	.1312	5.086E-03
T	7047(225)	43.80	42.55	1.701E-03	.0937	2.147E-03	.1183	2.351E-03	.1295	5.023E-03
T	7048(225)	44.83	43.58	1.681E-03	.0926	2.122E-03	.1169	2.323E-03	.1280	4.963E-03
		45.60		MODEL HAS LEFT CENTERLINE						
T	7049(225)	45.88	44.63	1.661E-03	.0915	2.096E-03	.1155	2.296E-03	.1265	4.905E-03
T	7050(225)	46.93	45.68	1.642E-03	.0904	2.072E-03	.1141	2.269E-03	.1250	4.843E-03
T	7051(225)	47.98	46.73	1.623E-03	.0894	2.049E-03	.1128	2.244E-03	.1235	4.789E-03

ERROR IN POWRF BASE<0 A = 6001242214734237 CALL FROM 7265J

GROUP 12
0373 - 7055

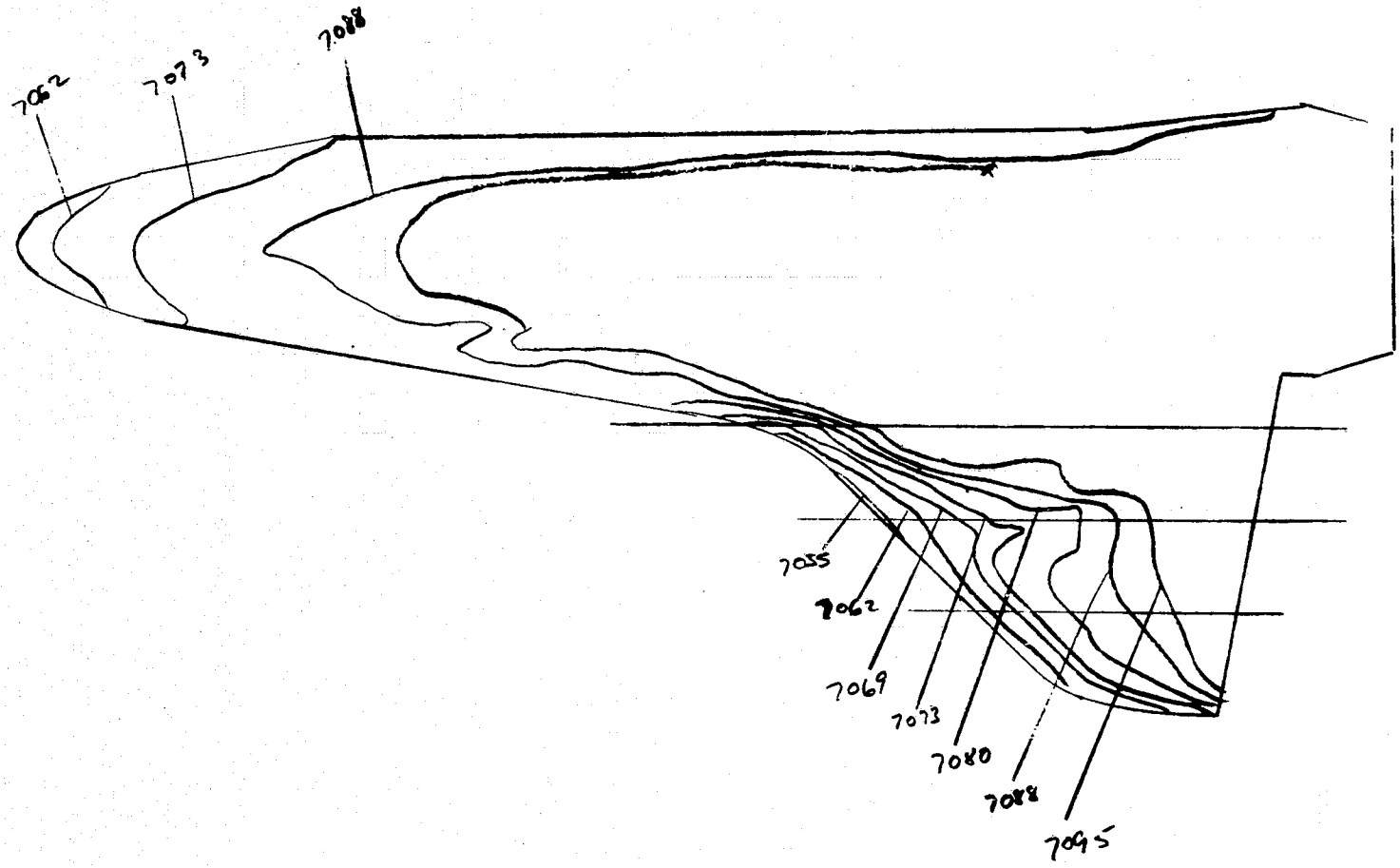

8/21/74

NASA-RI STS OH25A

V41B-83A

AEDC(ARO,INC.) ARNOLD AFS, TENNESSEE
VON KARMAN GAS DYNAMICS FACILITY
50 INCH HYPERSONIC TUNNEL B

GROUP	CONFIG	MODEL	MACH NO	PO(PSIA)	TO(DEG R)	ALPHA-MODEL	ALPHA-SECTOR	ALPHA-PREBEND	ROLL-MODEL	YAW
12	3	BODY FLUSH	7.90	111.9	1273	40.03	-10.03	30.00	180.00	-.00

T-INF (DEG R)	P-INF (PSIA)	Q-INF (PSIA)	V-INF (FT/SEC)	RHO-INF (SLUGS/FT3)	MU-INF (LB-SEC/FT2)	RE/FT (FT-1)	HREF (R= .0175FT)	STREF (R= .0175FT)
94.4	.012	.543	3762	1.105E-05	7.602E-08	5.465E 05	1.803E-02	5.473E-02

CAMERA IOP(T)	ROLL NO	PAINT TEMP (DEG F)	INITIAL TEMP (DEG F)	SQUARE ROOT (RHOXCXK)	TBAR(TO)	BETA(TO)
	373	250	82	.0535	0	0

	PIC NO	TIME	DELTIME	H(TO)	H(TO)/HREF	H(.9TO)	H(.9TO)/HREF	H(.867TO)	H(.867TO)/HREF	ST(TO)
T	7052(250)	.03		MODEL HAS NOT REACHED CENTERLINE						
T	7053(250)	1.00		MODEL HAS NOT REACHED CENTERLINE						
T	7054(250)	2.03		MODEL HAS NOT REACHED CENTERLINE						
INJECT TIME =		2.25								
T	7055(250)	3.05	1.79	1.061E-02	.5548	1.276E-02	.7073	1.404E-02	.7781	2.989E-02
T	7056(250)	4.10	2.84	7.945E-03	.4404	1.013E-02	.5614	1.114E-02	.6176	2.372E-02
T	7057(250)	5.13	3.87	6.809E-03	.3774	8.680E-03	.4811	9.549E-03	.5293	2.033E-02
T	7058(250)	6.18	4.92	6.038E-03	.3347	7.697E-03	.4266	8.467E-03	.4693	1.803E-02
T	7059(250)	7.23	5.97	5.480E-03	.3038	6.986E-03	.3872	7.686E-03	.4260	1.636E-02
T	7060(250)	8.26	6.99	5.062E-03	.2806	6.454E-03	.3577	7.099E-03	.3935	1.512E-02
T	7061(250)	9.31	8.05	4.720E-03	.2615	6.017E-03	.3334	6.619E-03	.3667	1.408E-02
T	7062(250)	10.36	9.10	4.439E-03	.2459	5.659E-03	.3135	6.225E-03	.3449	1.324E-02
T	7063(250)	11.41	10.15	4.203E-03	.2328	5.358E-03	.2968	5.894E-03	.3266	1.254E-02
T	7064(250)	12.44	11.17	4.005E-03	.2219	5.106E-03	.2829	5.617E-03	.3112	1.195E-02
T	7065(250)	13.49	12.23	3.829E-03	.2121	4.881E-03	.2705	5.370E-03	.2975	1.142E-02
T	7066(250)	14.54	13.28	3.674E-03	.2035	4.684E-03	.2594	5.153E-03	.2854	1.095E-02
T	7067(250)	15.59	14.33	3.537E-03	.1959	4.509E-03	.2497	4.960E-03	.2747	1.054E-02
T	7068(250)	16.62	15.35	3.417E-03	.1892	4.356E-03	.2412	4.792E-03	.2653	1.019E-02
T	7069(250)	17.67	16.41	3.305E-03	.1831	4.214E-03	.2334	4.636E-03	.2567	9.853E-03
T	7070(250)	18.72	17.46	3.204E-03	.1775	4.085E-03	.2262	4.494E-03	.2489	9.551E-03
T	7071(250)	19.77	18.51	3.112E-03	.1723	3.967E-03	.2197	4.364E-03	.2417	9.276E-03
T	7072(250)	20.82	19.56	3.027E-03	.1677	3.859E-03	.2137	4.246E-03	.2351	9.023E-03
T	7073(250)	21.85	20.59	2.951E-03	.1634	3.762E-03	.2083	4.138E-03	.2292	8.796E-03
T	7074(250)	22.90	21.64	2.878E-03	.1594	3.669E-03	.2032	4.037E-03	.2235	8.580E-03
T	7075(250)	23.95	22.69	2.811E-03	.1556	3.583E-03	.1984	3.942E-03	.2182	8.371E-03
T	7076(250)	25.00	23.74	2.748E-03	.1521	3.503E-03	.1939	3.854E-03	.2133	8.183E-03

****
* UNCLASSIFIED *
****

8/21/74

NASA-RI STS OH25A

V418-83A

AEDC(ARO,INC.) ARNOLD AFS, TENNESSEE
VON KARMAN GAS DYNAMICS FACILITY
50 INCH HYPERSONIC TUNNEL H

GROUP	CONFIG	MODEL	MACH NO	PO(PSIA)	TO(DEG R)	ALPHA-MODEL	ALPHA-SECTOR	ALPHA-PREBEND	ROLL-MODEL	YAW
12	3	BODY FLUSH	7.90	112.3	1273	40.03	-10.03	30.00	180.00	-.00

T-INF (DEG R)	P-INF (PSIA)	Q-INF (PSIA)	V-INF (FT/SEC)	RHO-INF (SLUGS/FT3)	MU-INF (LB-SEC/FT2)	RE/FT (FT-1)	HREF (R= .0175FT)	STREF (R= .0175FT)
94.4	.012	.545	3761	1.109E-05	7.601E-08	5.487E 05	1.807E-02	5.463E-02

CAMERA	ROLL NO	PAINT TEMP (DEG F)	INITIAL TEMP (DEG F)	SQUARE ROOT (RHOXCXK)	TBAR(TO)	BETA(TO)
TOP(T)	273	250	82	.0535	2.298E-01	2.5025E-01

	PIC NO	TIME	DELTIME	H(TO)	H(TO)/HREF	H(.9TO)	H(.9TO)/HREF	H(.867TO)	H(.867TO)/HREF	ST(TO)
T	7077(250)	26.03	24.77	2.690E-03	.1489	3.430E-03	.1898	3.773E-03	.2088	8.014E-03
T	7078(250)	27.08	25.82	2.635E-03	.1459	3.359E-03	.1859	3.695E-03	.2046	7.848E-03
T	7079(250)	28.13	26.87	2.583E-03	.1430	3.293E-03	.1823	3.622E-03	.2005	7.692E-03
T	7080(250)	29.18	27.92	2.534E-03	.1403	3.230E-03	.1788	3.554E-03	.1967	7.546E-03
T	7081(250)	30.23	28.97	2.487E-03	.1377	3.171E-03	.1755	3.488E-03	.1931	7.408E-03
T	7082(250)	31.26	30.00	2.445E-03	.1353	3.116E-03	.1725	3.428E-03	.1898	7.280E-03
T	7083(250)	32.31	31.05	2.403E-03	.1330	3.063E-03	.1696	3.370E-03	.1865	7.156E-03
T	7084(250)	33.36	32.10	2.363E-03	.1308	3.013E-03	.1668	3.314E-03	.1835	7.037E-03
T	7085(250)	34.41	33.15	2.325E-03	.1287	2.964E-03	.1641	3.261E-03	.1805	6.925E-03
T	7086(250)	35.44	34.18	2.290E-03	.1268	2.920E-03	.1616	3.212E-03	.1778	6.821E-03
T	7087(250)	36.49	35.23	2.256E-03	.1249	2.876E-03	.1592	3.164E-03	.1751	6.718E-03
T	7088(250)	37.54	36.28	2.223E-03	.1230	2.834E-03	.1569	3.117E-03	.1726	6.620E-03
T	7089(250)	38.59	37.33	2.191E-03	.1213	2.794E-03	.1546	3.073E-03	.1701	6.527E-03
T	7090(250)	39.65	38.38	2.161E-03	.1196	2.755E-03	.1525	3.031E-03	.1678	6.437E-03
T	7091(250)	40.67	39.41	2.133E-03	.1181	2.719E-03	.1505	2.991E-03	.1656	6.352E-03
T	7092(250)	41.72	40.46	2.105E-03	.1165	2.683E-03	.1485	2.952E-03	.1634	6.269E-03
T	7093(250)	42.77	41.51	2.078E-03	.1150	2.649E-03	.1466	2.914E-03	.1613	6.189E-03
T	7094(250)	43.83	42.56	2.052E-03	.1136	2.616E-03	.1448	2.878E-03	.1593	6.112E-03
		44.73		MODEL HAS LEFT CENTERLINE						
T	7095(250)	44.88	43.61	2.027E-03	.1122	2.585E-03	.1431	2.843E-03	.1574	6.038E-03
T	7096(250)	45.90	44.64	2.004E-03	.1109	2.555E-03	.1414	2.810E-03	.1556	5.968E-03
T	7097(250)	46.95	45.69	1.981E-03	.1096	2.525E-03	.1397	2.778E-03	.1537	5.894E-03

ERROR IN FOWRF BASE<0 A = 6001242342737361 CALL FROM 72651

GROUP 13

0373 - 7101

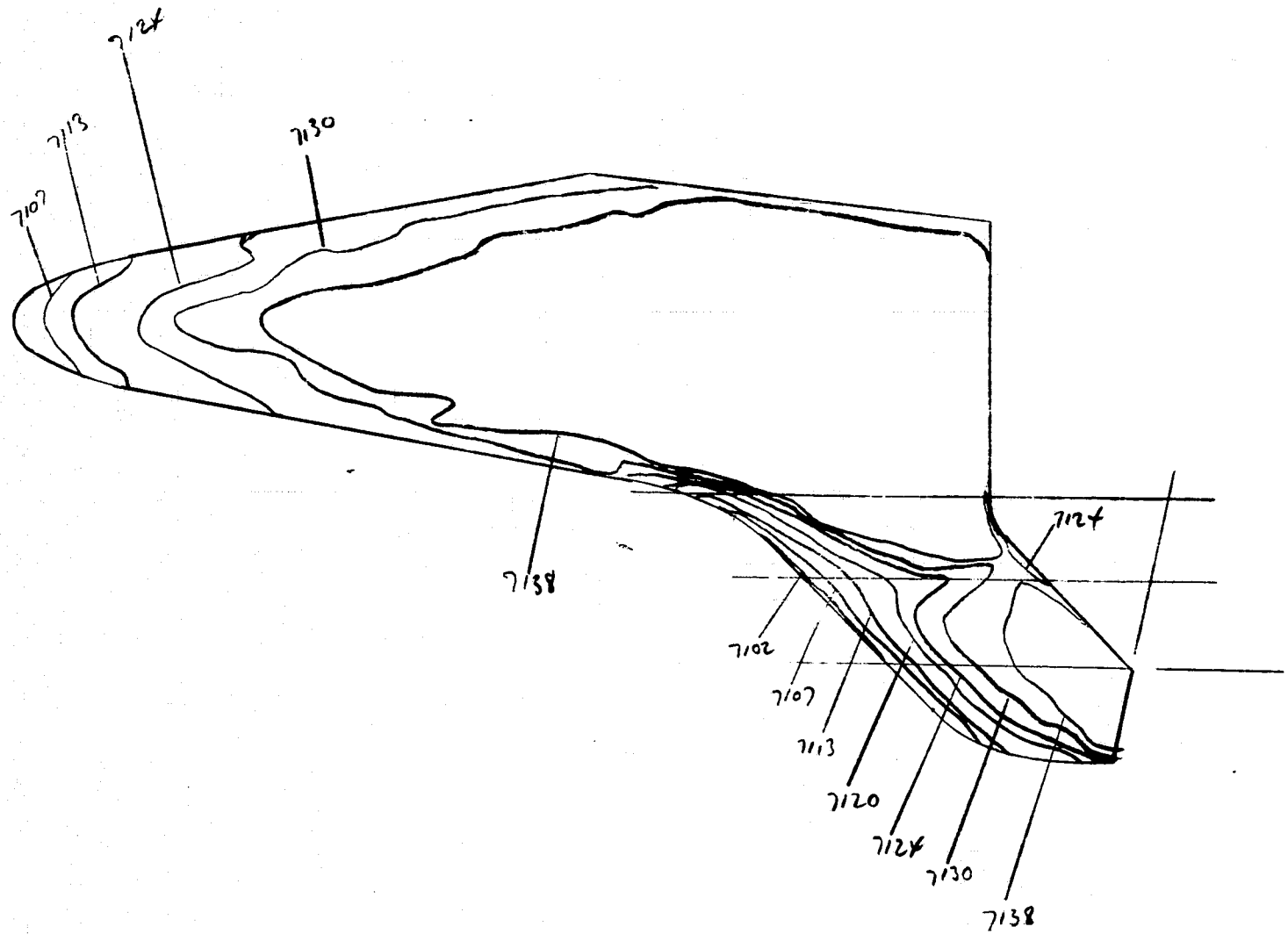

GROUP 13

0373-7101

8/21/74

NASA-RI STS OH25A

V41R-83A

AEDC(ARO,INC.) ARNOLD AFS, TENNESSEE
VON KARMAN GAS DYNAMICS FACILITY
50 INCH HYPERSONIC TUNNEL B

GROUP	CONFIG	MODEL	MACH NO	PO(PSIA)	TO(DEG R)	ALPHA-MODEL	ALPHA-SECTOR	ALPHA-PREBEND	ROLL-MODEL	YAW
13	4	LEADING EDGE	7.90	111.5	1273	40.04	-10.04	30.00	180.00	-.00

T-INF (DEG R)	P-INF (PSIA)	Q-INF (PSIA)	V-INF (FT/SEC)	RHO-INF (SLUGS/FT3)	MU-INF (LB-SEC/FT2)	RE/FT (FT-1)	HREF (R= .0175FT)	STREF (R= .0175FT)
94.5	.012	.541	3762	1.100E-05	7.604E-08	5.444E 05	1.800E-02	5.484E-02

CAMERA	ROLL NO	PAINT TEMP (DEG F)	INITIAL TEMP (DEG F)	SQUARE ROOT (RHOXCXK)	TBAR(TO)	BETA(TO)
10P(T)	373	250	83	.0535	0	0

	PIC NO	TIME	DELTIME	H(TO)	H(TO)/HREF	H(.9TO)	H(.9TO)/HREF	H(.867TO)	H(.867TO)/HREF	ST(TO)
T	7098(250)	.03		MODEL HAS NOT REACHED CENTERLINE						
T	7099(250)	1.00		MODEL HAS NOT REACHED CENTERLINE						
T	7100(250)	2.03		MODEL HAS NOT REACHED CENTERLINE						
INJECT TIME =		2.25								
T	7101(250)	3.05	1.79	9.944E-03	.5519	1.268E-02	.7035	1.394E-02	.7739	2.978E-02
T	7102(250)	4.10	2.84	7.892E-03	.4380	1.006E-02	.5584	1.107E-02	.6142	2.363E-02
T	7103(250)	5.13	3.87	6.764E-03	.3754	8.623E-03	.4786	9.485E-03	.5264	2.026E-02
T	7104(250)	6.18	4.92	5.998E-03	.3329	7.646E-03	.4243	8.411E-03	.4668	1.796E-02
T	7105(250)	7.23	5.97	5.444E-03	.3021	6.940E-03	.3852	7.634E-03	.4237	1.630E-02
T	7106(250)	8.28	7.02	5.020E-03	.2785	6.399E-03	.3550	7.039E-03	.3905	1.502E-02
T	7107(250)	9.31	8.05	4.689E-03	.2601	5.977E-03	.3316	6.575E-03	.3647	1.403E-02
T	7108(250)	10.36	9.10	4.409E-03	.2446	5.621E-03	.3118	6.184E-03	.3430	1.319E-02
T	7109(250)	11.41	10.15	4.175E-03	.2315	5.322E-03	.2951	5.855E-03	.3246	1.248E-02
T	7110(250)	12.46	11.20	3.974E-03	.2204	5.066E-03	.2809	5.573E-03	.3090	1.188E-02
T	7111(250)	13.49	12.23	3.804E-03	.2109	4.849E-03	.2689	5.334E-03	.2958	1.137E-02
T	7112(250)	14.54	13.28	3.650E-03	.2024	4.653E-03	.2580	5.119E-03	.2838	1.091E-02
T	7113(250)	15.59	14.33	3.514E-03	.1948	4.479E-03	.2484	4.927E-03	.2732	1.050E-02
T	7114(250)	16.62	15.35	3.394E-03	.1881	4.327E-03	.2398	4.760E-03	.2638	1.014E-02
T	7115(250)	17.67	16.41	3.284E-03	.1821	4.186E-03	.2321	4.605E-03	.2553	9.816E-03
T	7116(250)	18.72	17.46	3.183E-03	.1764	4.058E-03	.2249	4.464E-03	.2474	9.507E-03
T	7117(250)	19.77	18.51	3.091E-03	.1713	3.941E-03	.2184	4.335E-03	.2403	9.233E-03
T	7118(250)	20.80	19.53	3.009E-03	.1668	3.836E-03	.2126	4.220E-03	.2339	8.988E-03
T	7119(250)	21.85	20.59	2.931E-03	.1625	3.737E-03	.2071	4.111E-03	.2278	8.755E-03
T	7120(250)	22.90	21.64	2.859E-03	.1585	3.645E-03	.2020	4.010E-03	.2222	8.540E-03
T	7121(250)	23.95	22.69	2.792E-03	.1548	3.560E-03	.1973	3.916E-03	.2170	8.339E-03
T	7122(250)	25.00	23.74	2.730E-03	.1512	3.480E-03	.1928	3.828E-03	.2121	8.146E-03

****
* UNCLASSIFIED *
****

8/21/74

NASA-RI STS OH25A

V418-83A

AEDC(ARO,INC.) ARNOLD AFS, TENNESSEE
VON KARMAN GAS DYNAMICS FACILITY
50 INCH HYPERSONIC TUNNEL A

GROUP	CONFIG	MODEL	MACH NO	PO(PSIA)	TO(DEG R)	ALPHA-MODEL	ALPHA-SECTOR	ALPHA-PREBEND	ROLL-MODEL	YAW
13	4	LEADING EDGE	7.90	112.1	1274	40.04	-10.04	30.00	180.00	-.00

T-INF (DEG R)	P-INF (PSIA)	Q-INF (PSIA)	V-INF (FT/SEC)	RHO-INF (SLUGS/FT3)	MU-INF (LB-SEC/FT2)	RE/FT (FT-1)	HREF (R= .0175FT)	STREF (R= .0175FT)
94.5	.012	.544	3752	1.106E-05	7.605E-08	5.472E 05	1.805E-02	5.470E-02

CAMERA TOP(T)	ROLL NO	PAINT TEMP (DEG F)	INITIAL TEMP (DEG F)	SQUARE ROOT (RHOXCXK)	TBAR(TO)	BETA(TO)
	373	250	83	.0535	2.286E-01	2.4859E-01

	PIC NO	TIME	DELTIME	H(TO)	H(TO)/HREF	H(.9TO)	H(.9TO)/HREF	H(.867TO)	H(.867TO)/HREF	ST(TO)
T	7123(250)	26.05	24.79	2.671E-03	.1480	3.405E-03	.1887	3.746E-03	.2075	7.971E-03
T	7124(250)	27.08	25.82	2.618E-03	.1450	3.337E-03	.1849	3.671E-03	.2033	7.811E-03
T	7125(250)	28.13	26.87	2.566E-03	.1421	3.271E-03	.1812	3.598E-03	.1993	7.657E-03
T	7126(250)	29.18	27.92	2.517E-03	.1394	3.209E-03	.1778	3.530E-03	.1955	7.511E-03
T	7127(250)	30.23	28.97	2.471E-03	.1369	3.150E-03	.1745	3.465E-03	.1920	7.374E-03
T	7128(250)	31.26	30.00	2.428E-03	.1345	3.096E-03	.1715	3.405E-03	.1887	7.246E-03
T	7129(250)	32.31	31.05	2.387E-03	.1322	3.043E-03	.1686	3.347E-03	.1854	7.123E-03
T	7130(250)	33.36	32.10	2.347E-03	.1300	2.993E-03	.1658	3.292E-03	.1824	7.005E-03
T	7131(250)	34.41	33.15	2.310E-03	.1280	2.945E-03	.1631	3.239E-03	.1795	6.893E-03
T	7132(250)	35.44	34.18	2.275E-03	.1260	2.900E-03	.1606	3.190E-03	.1767	6.782E-03
T	7133(250)	36.49	35.23	2.241E-03	.1241	2.857E-03	.1582	3.142E-03	.1740	6.681E-03
T	7134(250)	37.54	36.28	2.208E-03	.1223	2.815E-03	.1559	3.097E-03	.1715	6.583E-03
T	7135(250)	38.59	37.33	2.177E-03	.1206	2.775E-03	.1537	3.053E-03	.1691	6.496E-03
T	7136(250)	39.65	38.38	2.147E-03	.1189	2.737E-03	.1515	3.011E-03	.1667	6.400E-03
T	7137(250)	40.67	39.41	2.119E-03	.1173	2.701E-03	.1496	2.971E-03	.1645	6.317E-03
T	7138(250)	41.72	40.46	2.091E-03	.1158	2.666E-03	.1476	2.932E-03	.1624	6.234E-03
		42.60		MODEL HAS LEFT CENTERLINE						
T	7139(250)	42.77	41.51	2.064E-03	.1143	2.632E-03	.1457	2.895E-03	.1603	6.154E-03
T	7140(250)	43.83	42.56	2.039E-03	.1129	2.599E-03	.1439	2.859E-03	.1583	6.078E-03
T	7141(250)	44.88	43.61	2.014E-03	.1115	2.567E-03	.1422	2.824E-03	.1564	6.005E-03

ERROR IN POWRF BASE<0 A = 6001000064653215 CALL FROM 7265)

0373 - 7145
GROUP 14

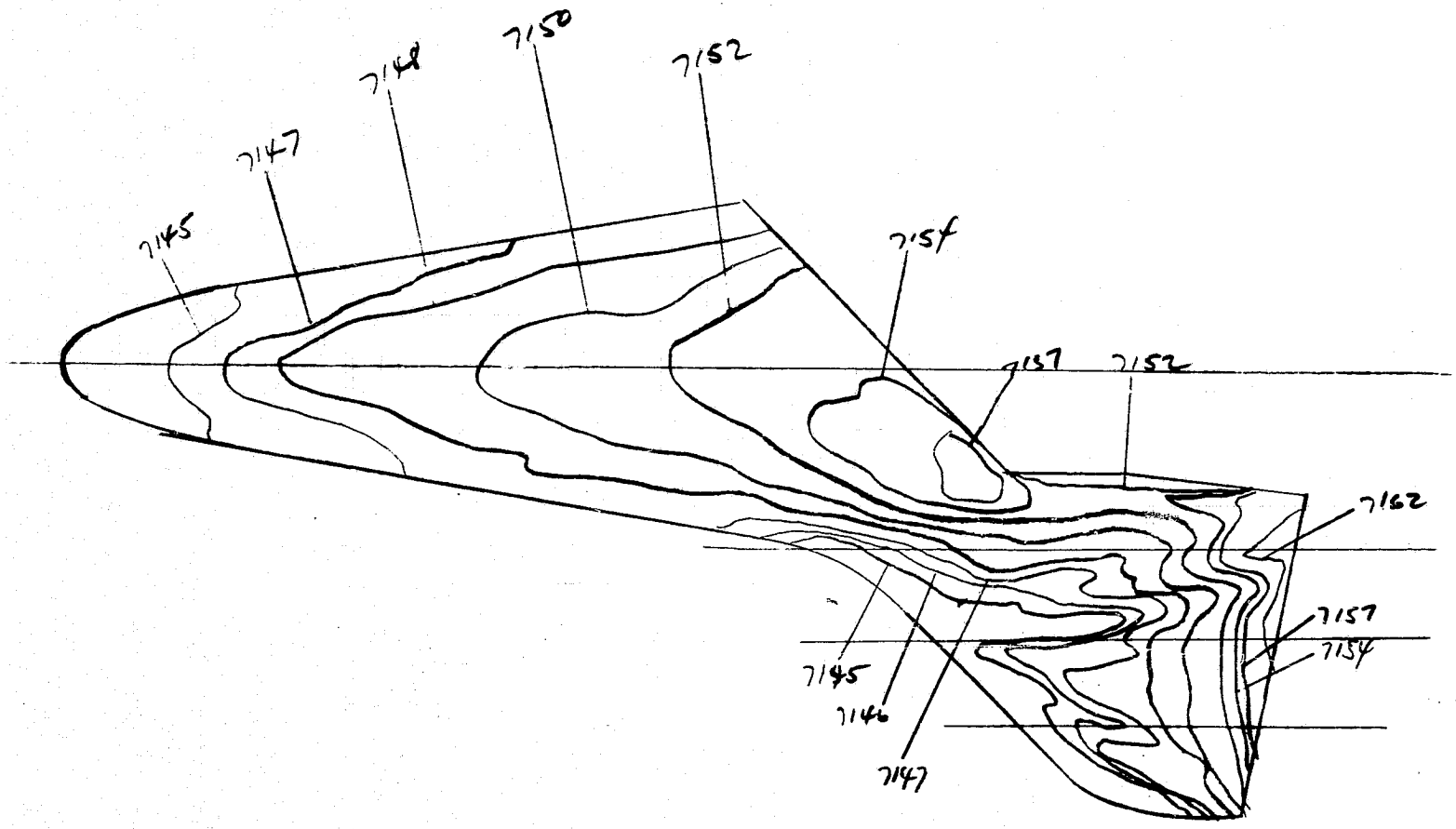

8/21/74

NASA-RI STS OH25A

V41B-83A

AEDC(ARO,INC.) ARNOLD AFS, TENNESSEE
VON KARMAN GAS DYNAMICS FACILITY
50 INCH HYPERSONIC TUNNEL H

GROUP	CONFIG	MODEL	MACH NO	PO(PSIA)	TO(DEG R)	ALPHA-MODEL	ALPHA-SECTOR	ALPHA-PREBEND	ROLL-MODEL	YAW
14	5	TRANSITION	7.90	110.3	1274	30.01	-.01	30.00	180.00	-.00

T-INF (DEG R)	P-INF (PSIA)	Q-INF (PSIA)	V-INF (FT/SEC)	RHO-INF (SLUGS/FT3)	MU-INF (LB-SEC/FT2)	RE/FT (FT-1)	HREF (R= .0175FT)	STREF (R= .0175FT)
94.5	.012	.535	3763	1.088E-05	7.606E-08	5.383E 05	1.791E-02	5.514E-02

CAMERA	ROLL NO	PAINT TEMP (DEG F)	INITIAL TEMP (DEG F)	SQUARE ROOT (RHOXCXK)	TBAR(TO)	BETA(TO)
TOP(T)	373	131	82	.0486	0	0

	PIC NO	TIME	DELTIME	H(TO)	H(TO)/HREF	H(.9TO)	H(.9TO)/HREF	H(.867TO)	H(.867TO)/HREF	ST(TO)
T	7142(131)	0		MODEL HAS NOT REACHED CENTERLINE						
T	7143(131)	.98		MODEL HAS NOT REACHED CENTERLINE						
T	7144(131)	2.00		MODEL HAS NOT REACHED CENTERLINE						
INJECT TIME =		2.23								
T	7145(131)	3.05	1.80	2.269E-03	.1265	2.778E-03	.1549	3.002E-03	.1674	6.900E-03
T	7146(131)	4.08	2.83	1.811E-03	.1010	2.218E-03	.1236	2.397E-03	.1336	5.508E-03
T	7147(131)	5.13	3.88	1.547E-03	.0862	1.894E-03	.1056	2.046E-03	.1141	4.703E-03
T	7148(131)	6.18	4.93	1.372E-03	.0765	1.680E-03	.0936	1.815E-03	.1012	4.172E-03
T	7149(131)	7.23	5.98	1.246E-03	.0694	1.525E-03	.0850	1.648E-03	.0918	3.784E-03
T	7150(131)	8.28	7.03	1.149E-03	.0640	1.407E-03	.0784	1.520E-03	.0847	3.490E-03
T	7151(131)	9.31	8.06	1.073E-03	.0598	1.314E-03	.0732	1.420E-03	.0791	3.258E-03
T	7152(131)	10.36	9.11	1.009E-03	.0562	1.236E-03	.0688	1.335E-03	.0744	3.064E-03
T	7153(131)	11.41	10.16	9.556E-04	.0532	1.170E-03	.0652	1.264E-03	.0704	2.901E-03
T	7154(131)	12.46	11.21	9.098E-04	.0507	1.114E-03	.0620	1.204E-03	.0670	2.762E-03
T	7155(131)	13.52	12.26	8.699E-04	.0485	1.065E-03	.0593	1.151E-03	.0641	2.641E-03
T	7156(131)	14.57	13.32	8.349E-04	.0465	1.022E-03	.0569	1.105E-03	.0615	2.532E-03
T	7157(131)	15.59	14.34	8.044E-04	.0448	9.851E-04	.0548	1.064E-03	.0592	2.438E-03
T	7158(131)	16.64	15.39	7.765E-04	.0432	9.508E-04	.0529	1.027E-03	.0572	2.353E-03
T	7159(131)	17.70	16.44	7.513E-04	.0418	9.199E-04	.0512	9.940E-04	.0553	2.274E-03
T	7160(131)	18.75	17.50	7.283E-04	.0405	8.919E-04	.0496	9.637E-04	.0536	2.205E-03
T	7161(131)	19.80	18.55	7.074E-04	.0393	8.662E-04	.0482	9.360E-04	.0521	2.141E-03
T	7162(131)	20.85	19.60	6.882E-04	.0383	8.427E-04	.0469	9.105E-04	.0506	2.083E-03
		21.75		MODEL HAS LEFT CENTERLINE						
T	7163(131)	21.90	20.65	6.704E-04	.0373	8.210E-04	.0456	8.871E-04	.0493	2.028E-03
T	7164(131)	22.93	21.68	6.544E-04	.0364	8.013E-04	.0445	8.658E-04	.0481	1.979E-03
T	7165(131)	23.98	22.73	6.390E-04	.0355	7.825E-04	.0435	8.455E-04	.0470	1.931E-03

```
                                    ****************
                                    * UNCLASSIFIED *
                                    ****************
                                        8/21/74

NASA-RI STS OH25A                  AEDC(ARO,INC.) ARNOLD AFS, TENNESSEE
                                    VON KARMAN GAS DYNAMICS FACILITY
V41B-83A                              50 INCH HYPERSONIC TUNNEL B

GROUP  CONFIG   MODEL      MACH NO   PO(PSIA)  TO(DEG R)  ALPHA-MODEL  ALPHA-SECTOR  ALPHA-PREBEND  ROLL-MODEL  YAW
  14      5   TRANSITION     7.90     111.4      1274        30.01         -.01          30.00        180.00      -.00

 T-INF    P-INF   Q-INF   V-INF     RHO-INF      MU-INF        RE/FT       HREF          STREF
(DEG R)  (PSIA)  (PSIA)  (FT/SEC)  (SLUGS/FT3)  (LB-SEC/FT2)  (FT-1)     (R= .0175FT)  (R= .0175FT)
 94.5     .012    .541    3762     1.099E-05    7.605E-08   5.438E 05   1.799E-02     5.487E-02

CAMERA        ROLL NO  PAINT TEMP (DEG F)   INITIAL TEMP (DEG F)   SQUARE ROOT (RHOXCXK)    TBAR(TO)   BETA(TO)
TOP(T)          373
                          131                  82                  .0486                   6.696E-02  6.2685E-02

   PIC NO     TIME DELTIME      H(TO)      H(TO)/HREF   H(.9TO)    H(.9TO)/HREF H( .867TO)  H( .867TO)/HREF  ST(TO)
       ERROR IN POWRF  BASE<0      A = 6001242251462311 CALL FROM 72651
```

GROUP 15
0373 - 7169

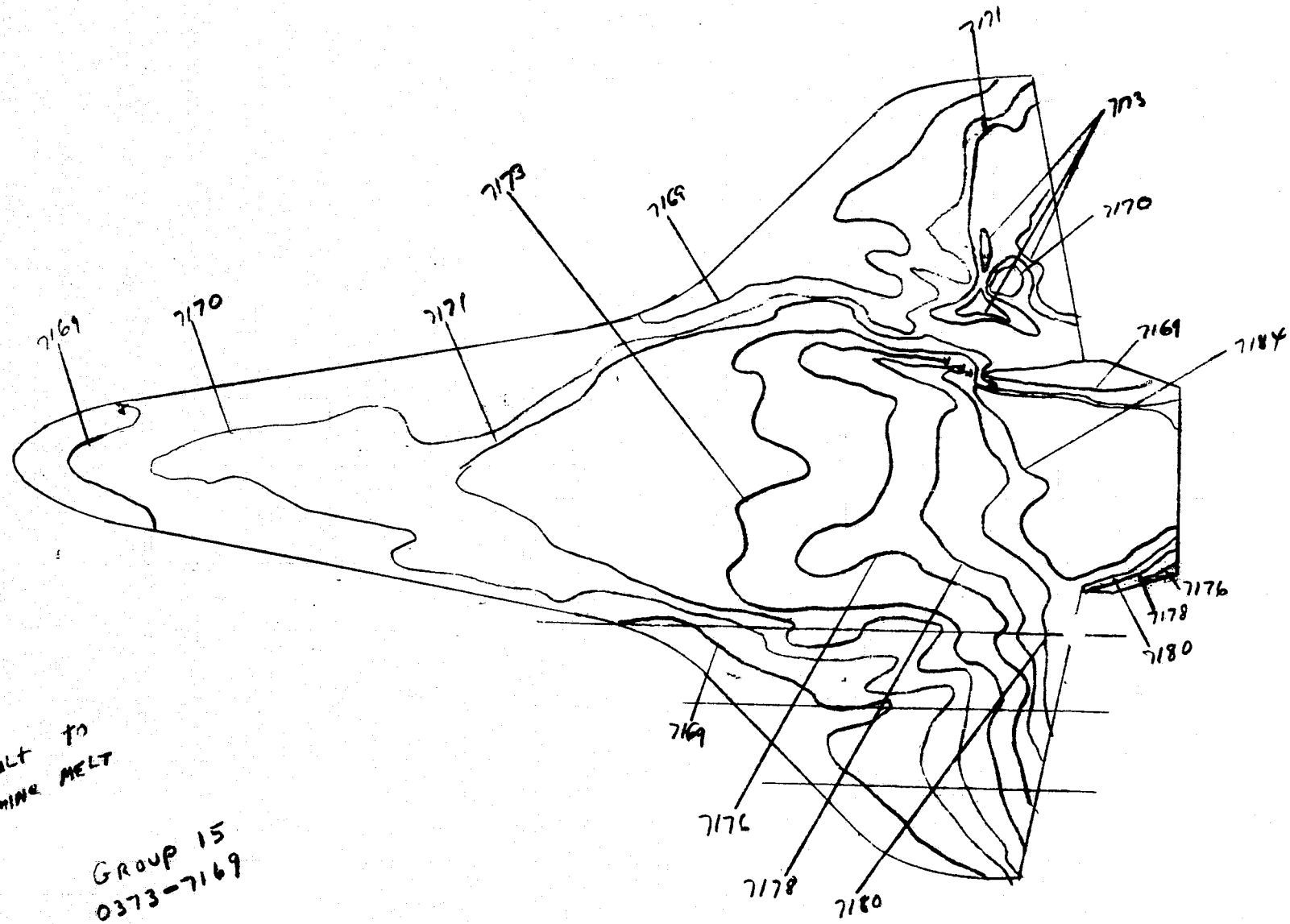

DIFFICULT TO
DETERMINE MELT

GROUP 15
0373-7169

****
* UNCLASSIFIED *
****

8/21/74

NASA-RI STS OH25A

V41R-83A

AEDC(ARO,INC.) ARNOLD AFS, TENNESSEE
VON KARMAN GAS DYNAMICS FACILITY
50 INCH HYPERSONIC TUNNEL R

GROUP	CONFIG	MODEL	MACH NO	PO(PSIA)	TO(DEG R)	ALPHA-MODEL	ALPHA-SECTOR	ALPHA-PREBEND	ROLL-MODEL	YAW
15	1	OREITER	7.90	111.2	1273	40.03	-10.03	30.00	180.00	-.00

T-INF (DEG R)	P-INF (PSIA)	Q-INF (PSIA)	V-INF (FT/SEC)	RHO-INF (SLUGS/FT3)	MU-INF (LB-SEC/FT2)	RE/FT (FT-1)	HREF (R= .0175FT)	STREF (R= .0175FT)
94.4	.012	.540	3761	1.098E-05	7.601F-08	5.433E 05	1.798E-02	5.490E-02

CAMERA TOP(T)	ROLL NO	PAINT TEMP (DEG F)	INITIAL TEMP (DEG F)	SQUARE ROOT (RHOXCXK)	TBAR(TO)	BETA(TO)
	373	131	83	.0496	0	0

	PIC NO	TIME	DELTIME	H(TO)	H(TO)/HREF	H(.9TO)	H(.9TO)/HREF	H(.867TO)	H(.867TO)/HREF	ST(TO)
T	7166(131)	.03		MODEL HAS NOT REACHED CENTERLINE						
T	7167(131)	1.00		MODEL HAS NOT REACHED CENTERLINE						
T	7168(131)	2.03		MODEL HAS NOT REACHED CENTERLINE						
INJECT TIME =		2.35								
T	7169(131)	3.05	1.73	2.270E-03	.1262	2.783E-03	.1547	3.007E-03	.1671	6.858E-03
T	7170(131)	4.10	2.78	1.791E-03	.0995	2.196E-03	.1220	2.373E-03	.1319	5.411E-03
T	7171(131)	5.13	3.81	1.531F-03	.0851	1.877E-03	.1043	2.028E-03	.1127	4.625E-03
T	7172(131)	6.18	4.86	1.355E-03	.0753	1.662E-03	.0924	1.795E-03	.0998	4.094E-03
T	7173(131)	7.23	5.91	1.229E-03	.0683	1.507E-03	.0837	1.628E-03	.0904	3.709E-03
T	7174(131)	8.28	6.96	1.132E-03	.0629	1.388E-03	.0771	1.500E-03	.0833	3.418E-03
T	7175(131)	9.34	8.01	1.055E-03	.0587	1.294E-03	.0719	1.398E-03	.0777	3.188E-03
T	7176(131)	10.36	9.04	9.938E-04	.0552	1.219E-03	.0677	1.317E-03	.0731	2.999E-03
T	7177(131)	11.41	10.09	9.406E-04	.0523	1.153E-03	.0641	1.246E-03	.0692	2.839E-03
T	7178(131)	12.46	11.14	8.951E-04	.0497	1.098E-03	.0609	1.186E-03	.0659	2.699E-03
T	7179(131)	13.52	12.19	8.557E-04	.0475	1.049E-03	.0583	1.134E-03	.0630	2.582E-03
T	7180(131)	14.57	13.25	8.210E-04	.0456	1.007E-03	.0559	1.088E-03	.0604	2.476E-03
T	7181(131)	15.59	14.27	7.910E-04	.0439	9.698E-04	.0539	1.048E-03	.0582	2.385E-03
T	7182(131)	16.64	15.32	7.633E-04	.0424	9.360E-04	.0520	1.011E-03	.0561	2.300E-03
T	7183(131)	17.70	16.37	7.384E-04	.0410	9.054E-04	.0503	9.783E-04	.0543	2.226E-03
		18.67		MODEL HAS LEFT CENTERLINE						
T	7184(131)	18.75	17.43	7.158E-04	.0398	8.777E-04	.0487	9.483E-04	.0527	2.158E-03
T	7185(131)	19.80	18.48	6.952E-04	.0386	8.524E-04	.0473	9.204E-04	.0511	2.096E-03
T	7186(131)	20.82	19.50	6.766E-04	.0376	8.296E-04	.0461	8.964E-04	.0498	2.040E-03
T	7187(131)	21.88	20.55	6.591E-04	.0366	8.081E-04	.0449	8.732E-04	.0485	1.985E-03

ERROR IN POWRF BASE<0 A = 6001242214734237 CALL FROM 72651

ORIGINAL PAGE IS
OF POOR QUALITY

GROUP 16
0373 - 7191

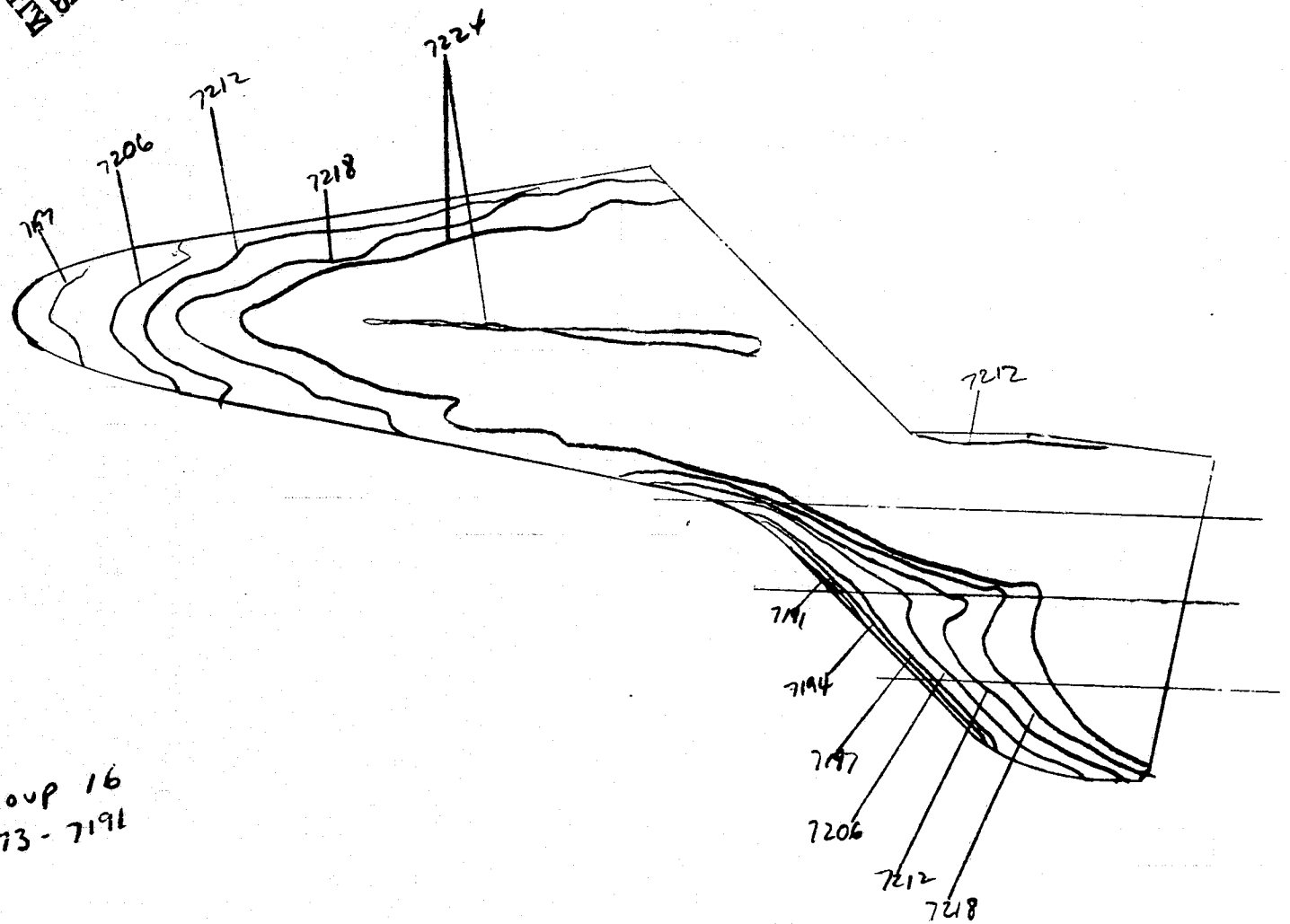

GROUP 16
0373 - 7191

8/21/74

NASA-RI STS OH25A

V41R-83A

AEDC(AHO,INC.) ARNOLD AFS, TENNESSEE
VON KARMAN GAS DYNAMICS FACILITY
50 INCH HYPERSONIC TUNNEL H

GROUP	CONFIG	MODEL	MACH NO	PO(PSIA)	TO(DEG R)	ALPHA-MODEL	ALPHA-SECTOR	ALPHA-PREBEND	ROLL-MODEL	YAW
16	5	TRANSITION	7.90	113.1	1270	40.03	-10.03	30.00	180.00	-.00

T-INF (DEG R)	P-INF (PSIA)	Q-INF (PSIA)	V-INF (FT/SEC)	RHO-INF (SLUGS/FT3)	MU-INF (LB-SEC/FT2)	RE/FT (FT-1)	HREF (R= .0175FT)	STREF (R= .0175FT)
94.2	.013	.549	3757	1.119E-05	7.584E-08	5.544E 05	1.812E-02	5.436E-02

CAMERA	ROLL NO	PAINT TEMP (DEG F)	INITIAL TEMP (DEG F)	SQUARE ROOT (RHOXCXK)	TBAR(TO)	BETA(TO)
TOP(T)	373	250	81	.0535	0	0

	PIC NO	TIME	DELTIME	H(TO)	H(TO)/HREF	H(.9TO)	H(.9TO)/HREF	H(.867TO)	H(.867TO)/HREF	ST(TO)
T	7188(250)	.03		MODEL HAS NOT REACHED CENTERLINE						
T	7189(250)	1.00		MODEL HAS NOT REACHED CENTERLINE						
T	7190(250)	2.03		MODEL HAS NOT REACHED CENTERLINE						
INJECT TIME =		2.23								
T	7191(250)	3.05	1.80	1.008E-02	.5560	1.286E-02	.7094	1.415E-02	.7807	2.975E-02
T	7192(250)	4.10	2.85	8.012E-03	.4419	1.022E-02	.5639	1.125E-02	.6205	2.365E-02
T	7193(250)	5.16	3.91	6.849E-03	.3778	8.739E-03	.4820	9.617E-03	.5305	2.022E-02
T	7194(250)	6.18	4.93	6.095E-03	.3362	7.777E-03	.4290	8.559E-03	.4721	1.799E-02
T	7195(250)	7.23	5.98	5.534E-03	.3051	7.061E-03	.3893	7.770E-03	.4284	1.632E-02
T	7196(250)	8.28	7.03	5.104E-03	.2813	6.512E-03	.3589	7.166E-03	.3949	1.504E-02
T	7197(250)	9.34	8.09	4.760E-03	.2624	6.074E-03	.3349	6.684E-03	.3685	1.404E-02
T	7198(250)	10.39	9.14	4.478E-03	.2468	5.714E-03	.3149	6.288E-03	.3465	1.319E-02
T	7199(250)	11.41	10.16	4.246E-03	.2340	5.417E-03	.2986	5.962E-03	.3286	1.251E-02
T	7200(250)	12.46	11.21	4.042E-03	.2227	5.157E-03	.2841	5.676E-03	.3126	1.190E-02
T	7201(250)	13.52	12.26	3.865E-03	.2130	4.931E-03	.2719	5.427E-03	.2991	1.139E-02
T	7202(250)	14.57	13.32	3.709E-03	.2043	4.733E-03	.2607	5.208E-03	.2869	1.092E-02
T	7203(250)	15.62	14.37	3.571E-03	.1967	4.556E-03	.2510	5.014E-03	.2762	1.051E-02
T	7204(250)	16.64	15.39	3.450E-03	.1900	4.402E-03	.2425	4.844E-03	.2668	1.016E-02
T	7205(250)	17.70	16.44	3.338E-03	.1839	4.259E-03	.2346	4.687E-03	.2582	9.826E-03
T	7206(250)	18.75	17.50	3.236E-03	.1782	4.129E-03	.2273	4.544E-03	.2502	9.518E-03
T	7207(250)	19.80	18.55	3.143E-03	.1731	4.010E-03	.2209	4.413E-03	.2431	9.252E-03
T	7208(250)	20.85	19.60	3.057E-03	.1684	3.901E-03	.2148	4.293E-03	.2364	8.992E-03
T	7209(250)	21.88	20.62	2.980E-03	.1641	3.803E-03	.2094	4.185E-03	.2304	8.766E-03
T	7210(250)	22.93	21.68	2.907E-03	.1601	3.709E-03	.2042	4.082E-03	.2248	8.551E-03
T	7211(250)	23.98	22.73	2.839E-03	.1563	3.623E-03	.1995	3.987E-03	.2195	8.351E-03
T	7212(250)	25.03	23.78	2.776E-03	.1528	3.542E-03	.1950	3.898E-03	.2146	8.164E-03

****
* UNCLASSIFIED *
****

8/21/74

NASA-RI STS OH25A

V41R-83A

AEDC(ARO,INC.) ARNOLD AFS, TENNESSEE
VON KARMAN GAS DYNAMICS FACILITY
50 INCH HYPERSONIC TUNNEL R

GROUP	CONFIG	MODEL	MACH NO	PO(PSIA)	TO(DEG R)	ALPHA-MODEL	ALPHA-SECTOR	ALPHA-PREBEND	ROLL-MODEL	YAW
16	5	TRANSITION	7.90	113.6	1270	40.03	-10.03	30.00	180.00	-.00

T-INF (DEG R)	P-INF (PSIA)	Q-INF (PSIA)	V-INF (FT/SEC)	RHO-INF (SLUGS/FT3)	MU-INF (LB-SEC/FT2)	RE/FT (FT-1)	HREF (R= .0175FT)	STREF (R= .0175FT)
94.2	.013	.551	3757	1.124E-05	7.583E-08	5.569E 05	1.816E-02	5.424E-02

CAMERA TOP(T)	ROLL NO	PAINT TEMP (DEG F)	INITIAL TEMP (DEG F)	SQUARE ROOT (RHOXCXK)	TBAR(TO)	BETA(TO)
	373	250	81	.0535	2.319E-01	2.5300E-01

	PIC NO	TIME	DELTIME	H(TO)	H(TO)/HREF	H(.9TO)	H(.9TO)/HREF	H(.867TO)	H(.867TO)/HREF	ST(TO)
T	7213(250)	26.08	24.83	2.716E-03	.1495	3.466E-03	.1908	3.814E-03	.2099	7.982E-03
T	7214(250)	27.13	25.88	2.661E-03	.1464	3.395E-03	.1868	3.736E-03	.2056	7.818E-03
T	7215(250)	28.16	26.91	2.609E-03	.1436	3.329E-03	.1832	3.664E-03	.2017	7.668E-03
T	7216(250)	29.21	27.96	2.560E-03	.1409	3.266E-03	.1798	3.595E-03	.1978	7.523E-03
T	7217(250)	30.26	29.01	2.513E-03	.1383	3.207E-03	.1765	3.529E-03	.1942	7.385E-03
T	7218(250)	31.31	30.06	2.469E-03	.1359	3.150E-03	.1734	3.467E-03	.1908	7.254E-03
T	7219(250)	32.36	31.11	2.427E-03	.1335	3.096E-03	.1703	3.407E-03	.1875	7.124E-03
T	7220(250)	33.39	32.14	2.388E-03	.1314	3.046E-03	.1676	3.353E-03	.1844	7.010E-03
T	7221(250)	34.44	33.19	2.350E-03	.1293	2.998E-03	.1649	3.299E-03	.1815	6.898E-03
T	7222(250)	35.49	34.24	2.313E-03	.1273	2.951E-03	.1624	3.248E-03	.1788	6.798E-03
T	7223(250)	36.54	35.29	2.278E-03	.1254	2.907E-03	.1600	3.199E-03	.1761	6.696E-03
T	7224(250)	37.59	36.34	2.245E-03	.1235	2.865E-03	.1576	3.153E-03	.1734	6.592E-03
T	7225(250)	38.62	37.37	2.214E-03	.1219	2.825E-03	.1555	3.109E-03	.1711	6.507E-03
T	7226(250)	39.67	38.42	2.184E-03	.1202	2.786E-03	.1533	3.066E-03	.1688	6.417E-03
T	7227(250)	40.72	39.47	2.154E-03	.1185	2.749E-03	.1512	3.025E-03	.1664	6.326E-03
T	7228(250)	41.77	40.52	2.126E-03	.1170	2.713E-03	.1493	2.986E-03	.1643	6.243E-03
		42.75		MODEL HAS LEFT CENTERLINE						
T	7229(250)	42.82	41.57	2.099E-03	.1155	2.678E-03	.1473	2.948E-03	.1622	6.164E-03
T	7230(250)	43.88	42.62	2.073E-03	.1141	2.645E-03	.1455	2.911E-03	.1601	6.087E-03
T	7231(250)	44.90	43.65	2.049E-03	.1127	2.614E-03	.1438	2.877E-03	.1583	6.015E-03

ERROR IN POWRF BASE<0 A = 6001242066733751 CALL FROM 72651

ORIGINAL PAGE IS
OF POOR QUALITY

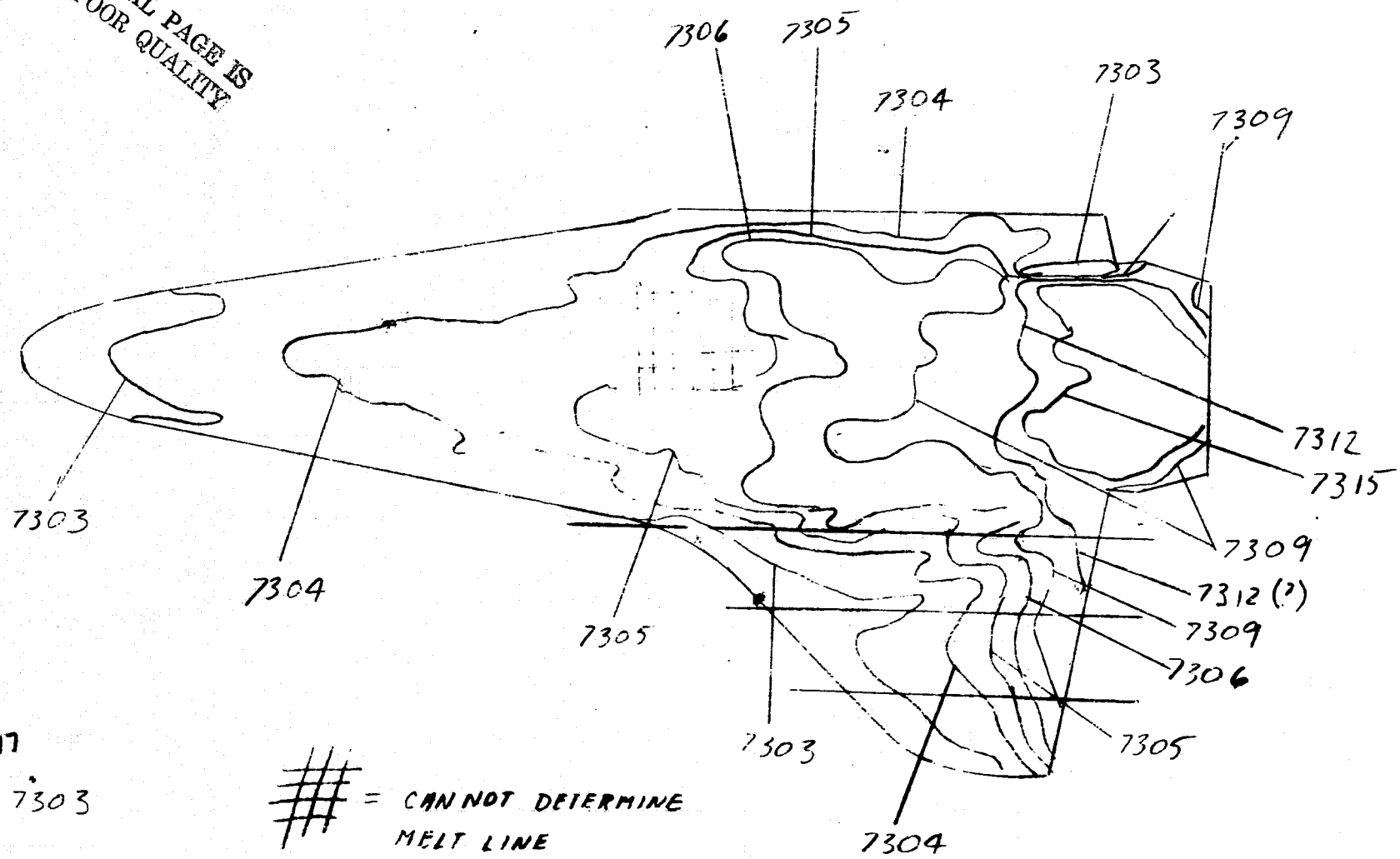

GROUP 17

0346 - 7303

= CANNOT DETERMINE MELT LINE

8/21/74

NASA-RI STS OH25A

V41B-83A

AEDC(ARO,INC.) ARNOLD AFS, TENNESSEE
VON KARMAN GAS DYNAMICS FACILITY
50 INCH HYPERSONIC TUNNEL B

GROUP	CONFIG	MODEL	MACH NO	PO(PSIA)	TO(DEG R)	ALPHA-MODEL	ALPHA-SECTOR	ALPHA-PREBEND	ROLL-MODEL	YAW
17	2	40 PERCENT	7.90	111.2	1270	40.02	-10.02	30.00	180.00	-.00

T-INF (DEG R)	P-INF (PSIA)	Q-INF (PSIA)	V-INF (FT/SEC)	RHO-INF (SLUGS/FT3)	MU-INF (LB-SEC/FT2)	RE/FT (FT-1)	HREF (R= .0175FT)	STREF (R= .0175FT)
94.2	.012	.540	3757	1.101E-05	7.583E-08	5.452E 05	1.797E-02	5.482E-02

CAMERA TOP(T)	ROLL NO	PAINT TEMP (DEG F)	INITIAL TEMP (DEG F)	SQUARE ROOT (RHOXCXK)	TBAR(TO)	BETA(TO)
	346	131	82	.0486	0	0

	PIC NO	TIME	DELTIME	H(TO)	H(TO)/HREF	H(.9TO)	H(.9TO)/HREF	H(.867TO)	H(.867TO)/HREF	ST(TO)
T	7300(131)	0		MODEL HAS NOT REACHED CENTERLINE						
T	7301(131)	.98		MODEL HAS NOT REACHED CENTERLINE						
T	7302(131)	2.03		MODEL HAS NOT REACHED CENTERLINE						
INJECT TIME =			2.20							
T	7303(131)	3.05	1.92	2.272E-03	.1262	2.786E-03	.1548	3.011E-03	.1673	6.846E-03
T	7304(131)	4.08	2.84	1.817E-03	.1009	2.227E-03	.1237	2.407E-03	.1337	5.473E-03
T	7305(131)	5.13	3.89	1.552E-03	.0862	1.903E-03	.1057	2.057E-03	.1143	4.677E-03
T	7306(131)	6.16	4.92	1.381E-03	.0767	1.693E-03	.0940	1.830E-03	.1016	4.157E-03
T	7307(131)	7.21	5.97	1.253E-03	.0696	1.537E-03	.0853	1.661E-03	.0922	3.773E-03
T	7308(131)	8.26	7.02	1.136E-03	.0642	1.417E-03	.0787	1.532E-03	.0850	3.479E-03
T	7309(131)	9.29	8.05	1.080E-03	.0600	1.324E-03	.0735	1.431E-03	.0794	3.250E-03
T	7310(131)	10.34	9.10	1.015E-03	.0564	1.245E-03	.0691	1.345E-03	.0747	3.054E-03
T	7311(131)	11.39	10.15	9.614E-04	.0534	1.179E-03	.0654	1.274E-03	.0707	2.891E-03
T	7312(131)	12.41	11.18	9.162E-04	.0509	1.123E-03	.0623	1.214E-03	.0674	2.756E-03
T	7313(131)	13.47	12.23	8.759E-04	.0486	1.074E-03	.0596	1.161E-03	.0644	2.637E-03
T	7314(131)	14.52	13.28	8.406E-04	.0467	1.031E-03	.0572	1.114E-03	.0618	2.528E-03
T	7315(131)	15.57	14.33	8.091E-04	.0449	9.921E-04	.0551	1.072E-03	.0595	2.433E-03
T	7316(131)	16.59	15.36	7.816E-04	.0434	9.583E-04	.0532	1.036E-03	.0575	2.351E-03
T	7317(131)	17.65	16.41	7.562E-04	.0420	9.271E-04	.0514	1.002E-03	.0556	2.272E-03
T	7318(131)	18.70	17.46	7.331E-04	.0407	8.988E-04	.0499	9.713E-04	.0539	2.203E-03
T	7319(131)	19.72	18.49	7.124E-04	.0395	8.735E-04	.0485	9.440E-04	.0524	2.143E-03
T	7320(131)	20.77	19.54	6.930E-04	.0384	8.497E-04	.0471	9.182E-04	.0509	2.083E-03
T	7321(131)	21.83	20.59	6.751E-04	.0375	8.277E-04	.0459	8.945E-04	.0496	2.029E-03
		22.75		MODEL HAS LEFT CENTERLINE						
T	7322(131)	22.88	21.64	6.585E-04	.0365	8.073E-04	.0448	8.725E-04	.0484	1.979E-03
T	7323(131)	23.90	22.67	6.434E-04	.0357	7.889E-04	.0437	8.525E-04	.0473	1.932E-03

****
* UNCLASSIFIED *
****

8/21/74

NASA-RI STS OH25A

V41B-83A

AEDC(ARO,INC.) ARNOLD AFS, TENNESSEE
VON KARMAN GAS DYNAMICS FACILITY
50 INCH HYPERSONIC TUNNEL B

GROUP	CONFIG	MODEL	MACH NO	PO(PSIA)	TO(DEG R)	ALPHA-MODEL	ALPHA-SECTOR	ALPHA-PREBEND	ROLL-MODEL	YAW
17	2	40 PERCENT	7.90	112.0	1270	40.02	-10.02	30.00	180.00	-.00

T-INF (DEG R)	P-INF (PSIA)	Q-INF (PSIA)	V-INF (FT/SEC)	RHO-INF (SLUGS/FT3)	MU-INF (LB-SEC/FT2)	RE/FT (FT-1)	HREF (R= .0175FT)	STREF (R= .0175FT)
94.2	.012	.544	3757	1.108E-05	7.584E-08	5.490E 05	1.803E-02	5.463E-02

CAMERA	ROLL NO	PAINT TEMP (DEG F)	INITIAL TEMP (DEG F)	SQUARE ROOT (RHOXCXK)	TBAR(TO)	BETA(TO)
TOP(T)	346					
		131	82	.0486	6.734E-02	6.3028E-02

	PIC NO	TIME	DELTIME	H(TO)	H(TO)/HREF	H(.9TO)	H(.9TO)/HREF	H(.867TO)	H(.867TO)/HREF	ST(TO)
T	7324(131)	24.95	23.72	6.290E-04	.0349	7.712E-04	.0428	8.334E-04	.0462	1.890E-03
T	7325(131)	26.00	24.77	6.155E-04	.0341	7.546E-04	.0418	8.155E-04	.0452	1.848E-03

ERROR IN FOWRF BASE<0 A = 6001242214734237 CALL FROM 72651

GROUP 18

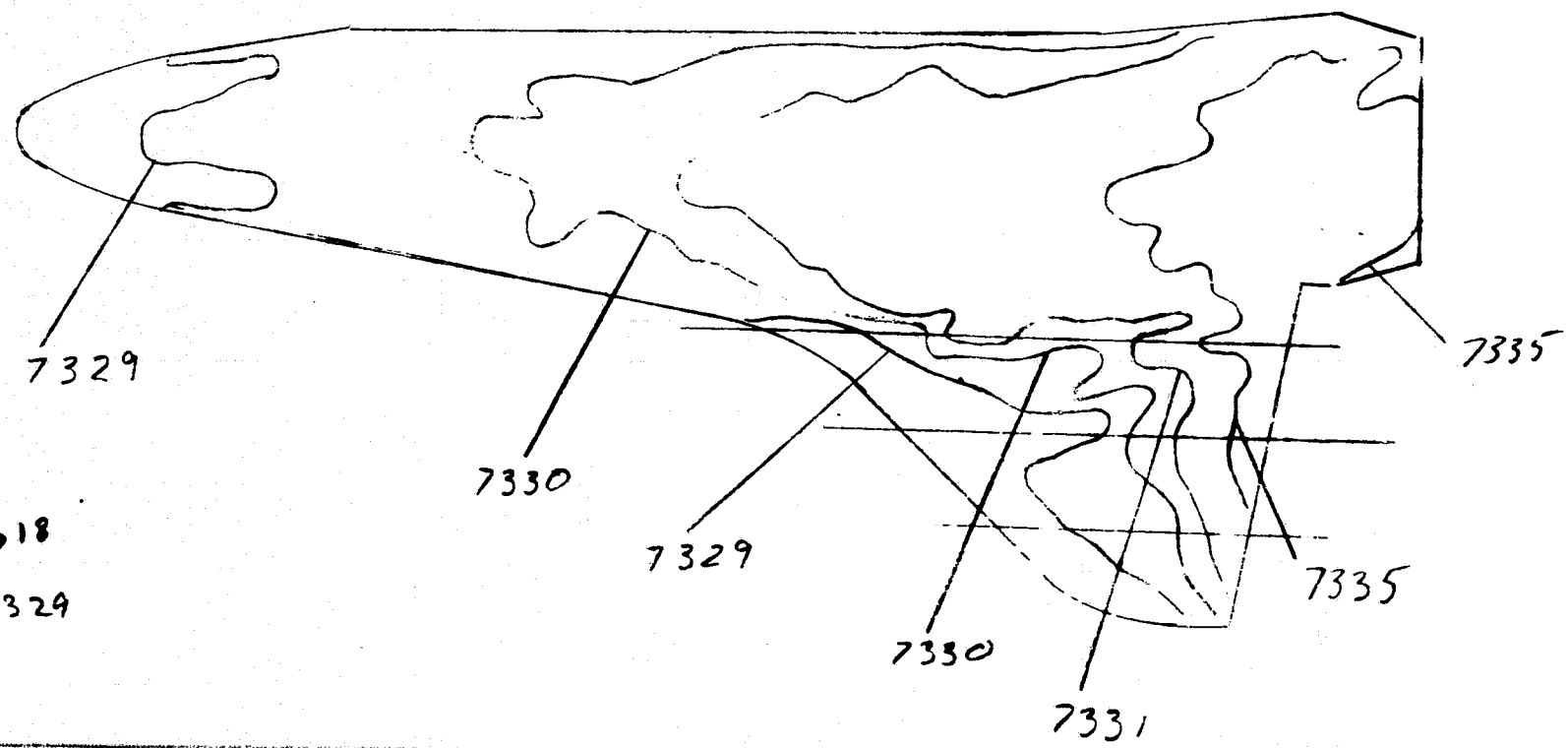

GROUP 18
0346-7329

8/21/74

NASA-RI STS OH25A

V41R-83A

AEDC(AHO,INC.) ARNOLD AFS, TENNESSEE
VON KARMAN GAS DYNAMICS FACILITY
50 INCH HYPERSONIC TUNNEL R

GROUP	CONFIG	MODEL	MACH NO	PO(PSIA)	TO(DEG R)	ALPHA-MODEL	ALPHA-SECTOR	ALPHA-PREBEND	ROLL-MODEL	YAW
18	3	BODY FLUSH	7.90	112.5	1270	40.03	-10.03	30.00	180.00	-.00

T-INF (DEG R)	P-INF (PSIA)	Q-INF (PSIA)	V-INF (FT/SEC)	RHO-INF (SLUGS/FT3)	MU-INF (LB-SEC/FT2)	RE/FT (FT-1)	HREF (R= .0175FT)	STREF (R= .0175FT)
94.2	.012	.546	3758	1.113E-05	7.587E-08	5.512E 05	1.808E-02	5.452E-02

CAMERA TOF(T)	ROLL NO	PAINT TEMP (DEG F)	INITIAL TEMP (DEG F)	SQUARE ROOT (RHOXCXK)	TBAR(TO)	BETA(TO)
	346	131	84	.0486	0	0

	PIC NO	TIME	DELTIME	H(TO)	H(TO)/HREF	H(.9TO)	H(.9TO)/HREF	H(.867TO)	H(.867TO)/HREF	ST(TO)
T	7326(131)	.03		MODEL HAS NOT REACHED CENTERLINE						
T	7327(131)	1.00		MODEL HAS NOT REACHED CENTERLINE						
T	7328(131)	2.03		MODEL HAS NOT REACHED CENTERLINE						
INJECT TIME =		2.25								
T	7329(131)	3.05	1.79	2.197E-03	.1214	2.694E-03	.1489	2.910E-03	.1608	6.555E-03
T	7330(131)	4.10	2.84	1.743E-03	.0964	2.138E-03	.1182	2.309E-03	.1277	5.203E-03
T	7331(131)	5.13	3.87	1.494E-03	.0826	1.832E-03	.1012	1.979E-03	.1094	4.455E-03
T	7332(131)	6.18	4.92	1.325E-03	.0732	1.625E-03	.0898	1.755E-03	.0970	3.950E-03
T	7333(131)	7.23	5.97	1.203E-03	.0664	1.475E-03	.0814	1.593E-03	.0880	3.582E-03
T	7334(131)	8.28	7.02	1.109E-03	.0612	1.360E-03	.0751	1.469E-03	.0811	3.303E-03
T	7335(131)	9.31	8.05	1.036E-03	.0572	1.270E-03	.0701	1.372E-03	.0758	3.085E-03
T	7336(131)	10.36	9.10	9.741E-04	.0538	1.194E-03	.0660	1.290E-03	.0713	2.902E-03
T	7337(131)	11.41	10.15	9.223E-04	.0509	1.131E-03	.0624	1.222E-03	.0674	2.745E-03
T	7338(131)	12.44	11.17	8.769E-04	.0485	1.078E-03	.0595	1.164E-03	.0643	2.616E-03
T	7339(131)	13.49	12.23	8.403E-04	.0464	1.030E-03	.0569	1.113E-03	.0614	2.501E-03
T	7340(131)	14.54	13.28	8.063E-04	.0445	9.867E-04	.0546	1.068E-03	.0589	2.398E-03
T	7341(131)	15.59	14.33	7.752E-04	.0428	9.518E-04	.0525	1.029E-03	.0567	2.308E-03
T	7342(131)	16.62	15.35	7.498E-04	.0414	9.194E-04	.0507	9.932E-04	.0548	2.230E-03
T	7343(131)	17.67	16.41	7.254E-04	.0400	8.895E-04	.0491	9.609E-04	.0530	2.155E-03
T	7344(131)	18.72	17.46	7.032E-04	.0388	8.623E-04	.0476	9.315E-04	.0514	2.091E-03
T	7345(131)	19.77	18.51	6.829E-04	.0377	8.374E-04	.0462	9.046E-04	.0499	2.029E-03
T	7346(131)	20.80	19.53	6.647E-04	.0367	8.151E-04	.0450	8.806E-04	.0486	1.975E-03
T	7347(131)	21.85	20.59	6.476E-04	.0357	7.940E-04	.0438	8.578E-04	.0473	1.922E-03
T	7348(131)	22.90	21.64	6.316E-04	.0348	7.745E-04	.0427	8.367E-04	.0461	1.875E-03
T	7349(131)	23.93	22.66	6.172E-04	.0340	7.568E-04	.0417	8.175E-04	.0451	1.832E-03
T	7350(131)	24.98	23.71	6.033E-04	.0332	7.398E-04	.0408	7.992E-04	.0440	1.789E-03

```
                                    ****************
                                    * UNCLASSIFIED *
                                    ****************
                                        8/21/74

NASA-RI STS OH25A                  AEDC(ARO.INC.) ARNOLD AFS. TENNESSEE
                                    VON KARMAN GAS DYNAMICS FACILITY
V41B-83A                               50 INCH HYPERSONIC TUNNEL B

GROUP  CONFIG    MODEL      MACH NO    PO(PSIA)  TO(DEG R)  ALPHA-MODEL  ALPHA-SECTOR  ALPHA-PREBEND  ROLL-MODEL  YAW
  18      3    BODY FLUSH     7.90      113.4      1270        40.03       -10.03         30.00        180.00      -.00

 T-INF    P-INF   Q-INF   V-INF     RHO-INF      MU-INF        RE/FT       HREF          STREF
(DEG R)  (PSIA)  (PSIA)  (FT/SEC)  (SLUGS/FT3)  (LB-SEC/FT2)  (FT-1)     (R= .0175FT)  (R= .0175FT)
 94.2     .013    .550    3757     1.122E-05    7.586E-08   5.557E 05   1.815E-02     5.430E-02

CAMERA        ROLL NO  PAINT TEMP (DEG F)   INITIAL TEMP (DEG F)   SQUARE ROOT (RHOXCXK)    TBAR(TO)   BETA(TO)
TOP(T)          346
                          131                  84                  .0486                   6.472E-02  6.0453E-02

   PIC NO      TIME DELTIME      H(TO)      H(TO)/HREF   H(.9TO)    H(.9TO)/HREF H( .867TO)  H( .867TO)/HREF  ST(TO)
              25.33            MODEL HAS LEFT CENTERLINE
T  7351(131) 26.03  24.77      5.904E-04     .0325     7.239E-04     .0399       7.821E-04      .0431       1.751E-03
       ERROR IN POWRF  BASE<0      A = 6001242434215625 CALL FROM 72651
```

****
* UNCLASSIFIED *
****

8/21/74

NASA-RI STS OH25A

V419-83A

AEDC(AHO,INC.) ARNOLD AFS, TENNESSEE
VON KARMAN GAS DYNAMICS FACILITY
50 INCH HYPERSONIC TUNNEL B

GROUP	CONFIG	MODEL	MACH NO	PO(PSIA)	TO(DEG R)	ALPHA-MODEL	ALPHA-SECTOR	ALPHA-PREBEND	ROLL-MODEL	YAW
19	4	LEADING EDGE	7.90	110.3	1270	40.05	-10.05	30.00	180.00	-.00

T-INF (DEG R)	P-INF (PSIA)	Q-INF (PSIA)	V-INF (FT/SEC)	RHO-INF (SLUGS/FT3)	MU-INF (LB-SEC/FT2)	RE/FT (FT-1)	HREF (R= .0175FT)	STREF (R= .0175FT)
94.2	.012	.535	3757	1.092E-05	7.583E-08	5.408E 05	1.790E-02	5.504E-02

CAMERA	ROLL NO	PAINT TEMP (DEG F)	INITIAL TEMP (DEG F)	SQUARE ROOT (RHOXCXK)	TBAR(TO)	BETA(TO)
TOP(T)	346	131	82	.0496	0	0

	PIC NO	TIME	DELTIME	H(TO)	H(TO)/HREF	H(.9TO)	H(.9TO)/HREF	H(.867TO)	H(.867TO)/HREF	ST(TO)
T	7352(131)	.03		MODEL HAS NOT REACHED CENTERLINE						
T	7353(131)	1.00		MODEL HAS NOT REACHED CENTERLINE						
T	7354(131)	2.03		MODEL HAS NOT REACHED CENTERLINE						
INJECT TIME =		2.30								
T	7355(131)	3.05	1.76	2.308E-03	.1289	2.830E-03	.1580	3.059E-03	.1708	7.024E-03
T	7356(131)	4.10	2.81	1.827E-03	.1019	2.240E-03	.1250	2.420E-03	.1351	5.553E-03
T	7357(131)	5.13	3.84	1.564E-03	.0872	1.917E-03	.1049	2.072E-03	.1155	4.749E-03
T	7358(131)	6.18	4.89	1.385E-03	.0773	1.698E-03	.0947	1.836E-03	.1024	4.208E-03
T	7359(131)	7.23	5.94	1.257E-03	.0700	1.541E-03	.0858	1.665E-03	.0928	3.807E-03
T	7360(131)	8.28	6.99	1.158E-03	.0645	1.420E-03	.0791	1.535E-03	.0855	3.509E-03
T	7361(131)	9.34	8.04	1.080E-03	.0601	1.324E-03	.0737	1.431E-03	.0796	3.263E-03
T	7362(131)	10.36	9.07	1.017E-03	.0565	1.247E-03	.0693	1.348E-03	.0749	3.068E-03
T	7363(131)	11.41	10.12	9.629E-04	.0535	1.181E-03	.0655	1.276E-03	.0708	2.899E-03
T	7364(131)	12.46	11.17	9.165E-04	.0508	1.124E-03	.0623	1.214E-03	.0674	2.754E-03
T	7365(131)	13.52	12.22	8.762E-04	.0486	1.074E-03	.0596	1.161E-03	.0644	2.633E-03
T	7366(131)	14.57	13.27	8.408E-04	.0466	1.031E-03	.0571	1.114E-03	.0617	2.522E-03
T	7367(131)	15.59	14.30	8.100E-04	.0449	9.931E-04	.0550	1.073E-03	.0595	2.428E-03
T	7368(131)	16.64	15.35	7.818E-04	.0433	9.585E-04	.0531	1.036E-03	.0574	2.345E-03
T	7369(131)	17.70	16.40	7.563E-04	.0419	9.273E-04	.0514	1.002E-03	.0555	2.267E-03
T	7370(131)	18.75	17.45	7.332E-04	.0406	8.990E-04	.0498	9.715E-04	.0538	2.198E-03
		19.30		MODEL HAS LEFT CENTERLINE						
T	7371(131)	19.80	18.51	7.121E-04	.0394	8.730E-04	.0484	9.435E-04	.0523	2.134E-03
T	7372(131)	20.85	19.56	6.927E-04	.0384	8.493E-04	.0470	9.178E-04	.0508	2.074E-03
T	7373(131)	21.88	20.58	6.752E-04	.0374	8.278E-04	.0459	8.946E-04	.0496	2.024E-03

ERROR IN POWRF BASE<0 A = 6001242066733751 CALL FROM 72651

GROUP 20

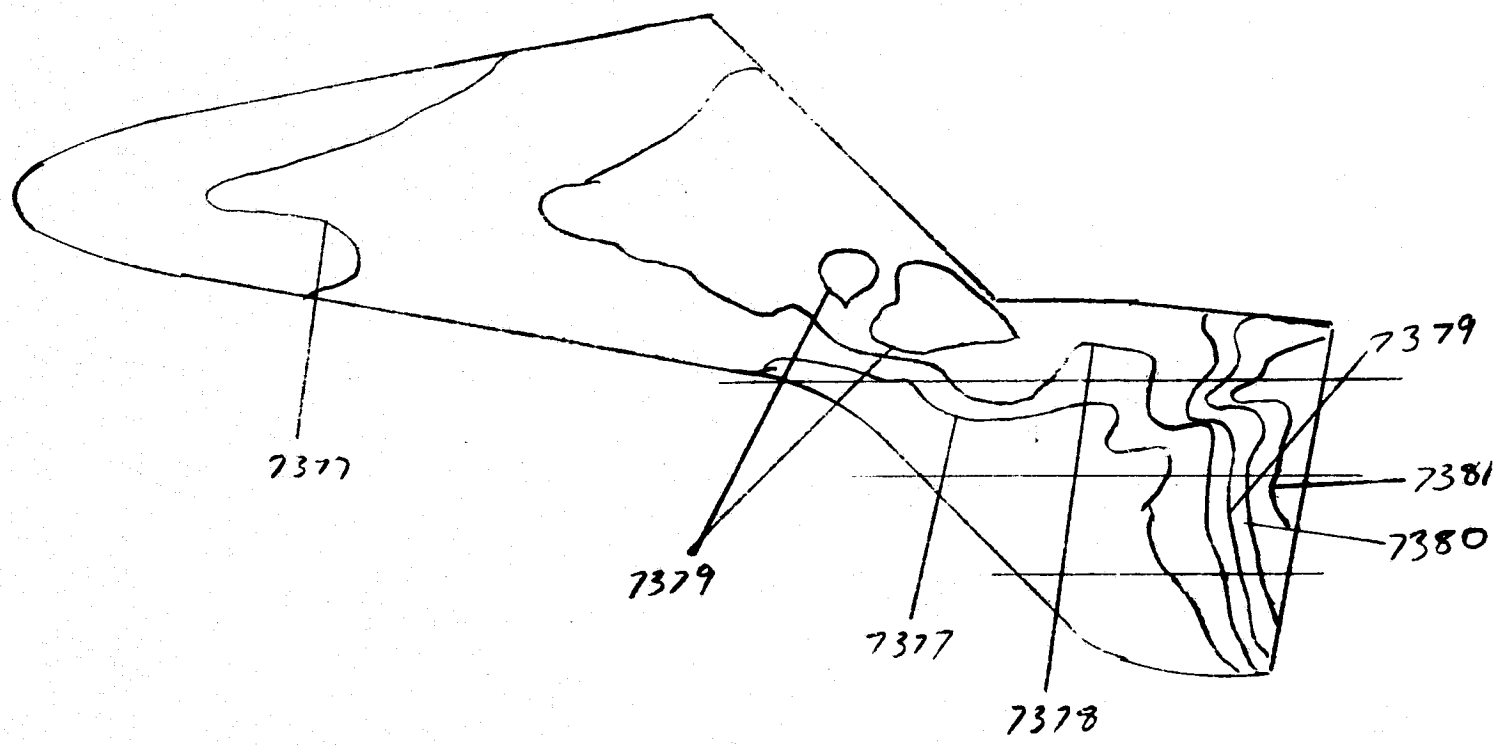

GROUP 20

0340-7377

```
                                   ****************
                                   * UNCLASSIFIED *
                                   ****************
                                         8/21/74

NASA-RI STS GH25A                  AEDC(ARO,INC.) ARNOLD AFS, TENNESSEE
                                   VON KARMAN GAS DYNAMICS FACILITY
V418-83A                              50 INCH HYPERSONIC TUNNEL A

GROUP  CONFIG   MODEL      MACH NO   PO(PSIA)  TO(DEG R)  ALPHA-MODEL  ALPHA-SECTOR  ALPHA-PREBEND  ROLL-MODEL  YAW
  20      5   TRANSITION     7.90     112.1      1270        40.02        -10.02        30.00        180.00     -.00

 T-INF    P-INF   Q-INF   V-INF     RHO-INF      MU-INF        RE/FT      HREF          STREF
(DEG R)  (PSIA)  (PSIA)  (FT/SEC)  (SLUGS/FT3)  (LB-SEC/FT2)  (FT-1)     (R= .0175FT)  (R= .0175FT)
 94.2     .012    .544    3758     1.109E-05    7.587E-08    5.492E 05   1.804E-02     5.461E-02

CAMERA        ROLL NO  PAINT TEMP (DEG F)   INITIAL TEMP (DEG F)   SQUARE ROOT (RHOXCXK)   TBAR(TO)   BETA(TO)
TOP(T)          346
                            131                   85                      .0486                   0          0

    PIC NO      TIME DELTIME    H(TO)      H(TO)/HREF   H(.9TO)    H(.9TO)/HREF H( .867TO)  H( .867TO)/HREF  ST(TO)
 T  7352(131)    .03            MODEL HAS NOT REACHED CENTERLINE
 T  7353(131)   1.00            MODEL HAS NOT REACHED CENTERLINE
 T  7354(131)   2.03            MODEL HAS NOT REACHED CENTERLINE
INJECT TIME =      2.23
 T  7355(131)   3.08   1.83     2.128E-03    .1177     2.609E-03    .1444       2.819E-03     .1560      6.361E-03
 T  7356(131)   4.10   2.85     1.703E-03    .0942     2.088E-03    .1155       2.256E-03     .1248      5.091E-03
 T  7357(131)   5.16   3.91     1.456E-03    .0805     1.785E-03    .0988       1.929E-03     .1067      4.352E-03
 T  7358(131)   6.21   4.96     1.292E-03    .0715     1.584E-03    .0877       1.712E-03     .0947      3.863E-03
 T  7359(131)   7.23   5.98     1.176E-03    .0650     1.442E-03    .0798       1.558E-03     .0862      3.513E-03
 T  7360(131)   8.28   7.03     1.085E-03    .0600     1.330E-03    .0736       1.437E-03     .0795      3.240E-03
 T  7361(131)   9.34   8.09     1.012E-03    .0559     1.241E-03    .0686       1.340E-03     .0741      3.022E-03
 T  7362(131)  10.36   9.11     9.531E-04    .0527     1.169E-03    .0646       1.263E-03     .0698      2.847E-03
 T  7363(131)  11.41  10.16     9.024E-04    .0499     1.107E-03    .0612       1.196E-03     .0661      2.693E-03
 T  7364(131)  12.46  11.21     8.591E-04    .0475     1.053E-03    .0582       1.138E-03     .0629      2.564E-03
               12.81            MODEL HAS LEFT CENTERLINE
 T  7365(131)  13.52  12.26     8.215E-04    .0454     1.007E-03    .0557       1.088E-03     .0602      2.451E-03
      ERROR IN POWRF  BASE<0      A = 6001000117201053 CALL FROM 72651
```

8/21/74

NASA-RI STS OH25A

V418-83A

AEDC(ARO.INC.) ARNOLD AFS, TENNESSEE
VON KARMAN GAS DYNAMICS FACILITY
50 INCH HYPERSONIC TUNNEL B

GROUP	CONFIG	MODEL	MACH NO	PO(PSIA)	TO(DEG R)	ALPHA-MODEL	ALPHA-SECTOR	ALPHA-PREBEND	ROLL-MODEL	YAW
21	1	OREITER	7.90	112.9	1271	30.01	-.01	30.00	180.00	-.00

T-INF (DEG R)	P-INF (PSIA)	Q-INF (PSIA)	V-INF (FT/SEC)	RHO-INF (SLUGS/FT3)	MU-INF (LB-SEC/FT2)	RE/FT (FT-1)	HREF (R= .0175FT)	STREF (R= .0175FT)
94.3	.013	.548	3759	1.116E-05	7.590E-08	5.527E 05	1.811E-02	5.444E-02

CAMERA TOP(T)	ROLL NO	PAINT TEMP (DEG F)	INITIAL TEMP (DEG F)	SQUARE ROOT (RHOACXK)	TBAR(TO)	BETA(TO)
	346	131	0	0	0	0

	PIC NO	TIME	DELTIME	H(TO)	H(TO)/HREF	H(.9TO)	H(.9TO)/HREF	H(.867TO)	H(.867TO)/HREF	ST(TO)
T	7398(131)	.03		MODEL HAS NOT REACHED CENTERLINE						
T	7399(131)	1.00		MODEL HAS NOT REACHED CENTERLINE						
T	7400(131)	2.03		MODEL HAS NOT REACHED CENTERLINE						
INJECT TIME =		2.25								
T	7401(131)	3.05	1.79	0	0	0	0	0	0	0
T	7402(131)	4.10	2.84	0	0	0	0	0	0	0
T	7403(131)	5.16	3.89	0	0	0	0	0	0	0
T	7404(131)	6.21	4.94	0	0	0	0	0	0	0
T	7405(131)	7.26	5.99	0	0	0	0	0	0	0
T	7406(131)	8.31	7.04	0	0	0	0	0	0	0
T	7407(131)	9.36	8.10	0	0	0	0	0	0	0
T	7408(131)	10.39	9.12	0	0	0	0	0	0	0
T	7409(131)	11.44	10.17	0	0	0	0	0	0	0
T	7410(131)	12.49	11.22	0	0	0	0	0	0	0
T	7411(131)	13.54	12.28	0	0	0	0	0	0	0
T	7412(131)	14.59	13.33	0	0	0	0	0	0	0
T	7413(131)	15.64	14.38	0	0	0	0	0	0	0
T	7414(131)	16.69	15.43	0	0	0	0	0	0	0
T	7415(131)	17.75	16.48	0	0	0	0	0	0	0
T	7416(131)	18.80	17.53	0	0	0	0	0	0	0
T	7417(131)	19.85	18.58	0	0	0	0	0	0	0
T	7418(131)	20.87	19.61	0	0	0	0	0	0	0
T	7419(131)	21.93	20.66	0	0	0	0	0	0	0
T	7420(131)	22.98	21.71	0	0	0	0	0	0	0
T	7421(131)	24.03	22.76	0	0	0	0	0	0	0
T	7422(131)	25.08	23.81	0	0	0	0	0	0	0

****
* UNCLASSIFIED *
****

8/21/74

NASA-RI STS OH25A

AEDC(ARO,INC.) ARNOLD AFS, TENNESSEE
VON KARMAN GAS DYNAMICS FACILITY
50 INCH HYPERSONIC TUNNEL B

V418-83A

GROUP	CONFIG	MODEL	MACH NO	PO(PSIA)	TO(DEG R)	ALPHA-MODEL	ALPHA-SECTOR	ALPHA-PREHEND	ROLL-MODEL	YAW
21	1	OREITER	7.90	113.3	1271	30.01	-.01	30.00	180.00	-.00

T-INF (DEG R)	P-INF (PSIA)	Q-INF (PSIA)	V-INF (FT/SEC)	RHO-INF (SLUGS/FT3)	MU-INF (LB-SEC/FT2)	RE/FT (FT-1)	HREF (R= .0175FT)	STREF (R= .0175FT)
94.3	.013	.550	3759	1.120E-05	7.590E-08	5.547E 05	1.814E-02	5.434E-02

CAMERA	ROLL NO	PAINT TEMP (DEG F)	INITIAL TEMP (DEG F)	SQUARE ROOT (RHOACXK)	TBAR(TO)	BETA(TO)
TOP(T)	346	131	0	0	0	0

	PIC NO	TIME	DELTIME	H(TO)	H(TO)/HREF	H(.9TO)	H(.9TO)/HREF	H(.867TO)	H(.867TO)/HREF	ST(TO)
T	7423(131)	26.13	24.87	0	0	0	0	0	0	0
T	7424(131)	27.18	25.92	0	0	0	0	0	0	0
T	7425(131)	28.23	26.97	0	0	0	0	0	0	0
T	7426(131)	29.28	28.02	0	0	0	0	0	0	0
T	7427(131)	30.31	29.05	0	0	0	0	0	0	0
T	7428(131)	31.36	30.10	0	0	0	0	0	0	0
T	7429(131)	32.41	31.15	0	0	0	0	0	0	0
T	7430(131)	33.46	32.20	0	0	0	0	0	0	0
T	7431(131)	34.51	33.25	0	0	0	0	0	0	0
T	7432(131)	35.57	34.30	0	0	0	0	0	0	0
T	7433(131)	36.62	35.35	0	0	0	0	0	0	0
T	7434(131)	37.67	36.40	0	0	0	0	0	0	0
T	7435(131)	38.72	37.45	0	0	0	0	0	0	0
T	7436(131)	39.77	38.51	0	0	0	0	0	0	0
T	7437(131)	40.82	39.56	0	0	0	0	0	0	0
T	7438(131)	41.87	40.61	0	0	0	0	0	0	0
T	7439(131)	42.92	41.66	0	0	0	0	0	0	0
		43.70		MODEL HAS LEFT CENTERLINE						
T	7440(131)	43.98	42.71	0	0	0	0	0	0	0
T	7441(131)	45.00	43.74	0	0	0	0	0	0	0
T	7442(131)	46.05	44.79	0	0	0	0	0	0	0

ERROR IN FOWRF BASE<0 A = 6001241740736305 CALL FROM 72651

60

8/21/74

NASA-RI STS OH25A

V418-83A

AEDC(ARO,INC.) ARNOLD AFS, TENNESSEE
VON KARMAN GAS DYNAMICS FACILITY
50 INCH HYPERSONIC TUNNEL B

GROUP	CONFIG	MODEL	MACH NO	PO(PSIA)	TO(DEG R)	ALPHA-MODEL	ALPHA-SECTOR	ALPHA-PREBEND	ROLL-MODEL	YAW
22	1	OREITER	7.90	111.5	1271	40.01	-10.01	30.00	180.00	-.00

T-INF (DEG R)	P-INF (PSIA)	Q-INF (PSIA)	V-INF (FT/SEC)	RHO-INF (SLUGS/FT3)	MU-INF (LB-SEC/FT2)	RE/FT (FT-1)	HREF (R= .0175FT)	STREF (R= .0175FT)
94.3	.012	.541	3758	1.103E-05	7.590E-08	5.460E 05	1.800E-02	5.477E-02

CAMERA	ROLL NO	PAINT TEMP (DEG F)	INITIAL TEMP (DEG F)	SQUARE ROOT (RHOXCXK)	TBAR(TO)	BETA(TO)
TOP(T)	346	131	0	0	0	0

	PIC NO	TIME	DELTIME	H(TO)	H(TO)/HREF	H(.9TO)	H(.9TO)/HREF	H(.867TO)	H(.867TO)/HREF	ST(TO)
T	7443(131)	0		MODEL HAS NOT REACHED CENTERLINE						
T	7444(131)	.98		MODEL HAS NOT REACHED CENTERLINE						
T	7445(131)	2.00		MODEL HAS NOT REACHED CENTERLINE						
INJECT TIME =		2.30								
T	7446(131)	3.03	1.74	0	0	0	0	0	0	0
T	7447(131)	4.08	2.79	0	0	0	0	0	0	0
T	7448(131)	5.13	3.84	0	0	0	0	0	0	0
T	7449(131)	6.18	4.89	0	0	0	0	0	0	0
T	7450(131)	7.23	5.94	0	0	0	0	0	0	0
T	7451(131)	8.26	6.97	0	0	0	0	0	0	0
T	7452(131)	9.31	8.02	0	0	0	0	0	0	0
T	7453(131)	10.36	9.07	0	0	0	0	0	0	0
T	7454(131)	11.41	10.12	0	0	0	0	0	0	0
T	7455(131)	12.46	11.17	0	0	0	0	0	0	0
T	7456(131)	13.52	12.22	0	0	0	0	0	0	0
T	7457(131)	14.57	13.27	0	0	0	0	0	0	0
T	7458(131)	15.62	14.33	0	0	0	0	0	0	0
T	7459(131)	16.67	15.38	0	0	0	0	0	0	0
T	7460(131)	17.72	16.43	0	0	0	0	0	0	0
T	7461(131)	18.77	17.48	0	0	0	0	0	0	0
T	7462(131)	19.82	18.53	0	0	0	0	0	0	0
T	7463(131)	20.87	19.58	0	0	0	0	0	0	0
T	7464(131)	21.93	20.63	0	0	0	0	0	0	0
T	7465(131)	22.98	21.68	0	0	0	0	0	0	0
T	7466(131)	24.03	22.73	0	0	0	0	0	0	0
T	7467(131)	25.08	23.79	0	0	0	0	0	0	0

```
                                        ****************
                                        * UNCLASSIFIED *
                                        ****************
                                              8/21/74

NASA-RI STS OH25A                   AEDC(ARO,INC.) ARNOLD AFS, TENNESSEE
                                    VON KARMAN GAS DYNAMICS FACILITY
V418-83A                               50 INCH HYPERSONIC TUNNEL B

GROUP  CONFIG    MODEL      MACH NO    PO(PSIA)  TO(DEG R)  ALPHA-MODEL  ALPHA-SECTOR  ALPHA-PREBEND  ROLL-MODEL  YAW
 22      1     ORBITER       7.90       112.0      1271        40.01       -10.01         30.00        180.00     -.00

 T-INF    P-INF    Q-INF    V-INF     RHO-INF      MU-INF       RE/FT      HREF          STREF
(DEG R)   (PSIA)   (PSIA)   (FT/SEC)  (SLUGS/FT3)  (LB-SEC/FT2)  (FT-1)    (R= .0175FT)  (R= .0175FT)
 94.3      .012     .544     3758     1.107E-05    7.590E-08   5.484E 05   1.804E-02     5.465E-02

CAMERA      ROLL NO  PAINT TEMP (DEG F)  INITIAL TEMP (DEG F)  SQUARE ROOT (RHOXCXK)  TBAR(TO)  BETA(TO)
TOP(T)       346
                        131                   0                      0                     0         0

     PIC NO      TIME DELTIME    H(TO)    H(TO)/HREF  H(.9TO)  H(.9TO)/HREF H( .867TO) H( .867TO)/HREF ST(TO)
 T  7468(131) 26.13  24.84        0          0         0         0          0          0            0
 T  7469(131) 27.16  25.86        0          0         0         0          0          0            0
 T  7470(131) 28.21  26.91        0          0         0         0          0          0            0
 T  7471(131) 29.26  27.97        0          0         0         0          0          0            0
 T  7472(131) 30.31  29.02        0          0         0         0          0          0            0
 T  7473(131) 31.36  30.07        0          0         0         0          0          0            0
 T  7474(131) 32.41  31.12        0          0         0         0          0          0            0
 T  7475(131) 33.46  32.17        0          0         0         0          0          0            0
 T  7476(131) 34.51  33.22        0          0         0         0          0          0            0
 T  7477(131) 35.57  34.27        0          0         0         0          0          0            0
 T  7478(131) 36.62  35.32        0          0         0         0          0          0            0
 T  7479(131) 37.67  36.38        0          0         0         0          0          0            0
              38.69          MODEL HAS LEFT CENTERLINE
 T  7480(131) 38.72  37.43        0          0         0         0          0          0            0
 T  7481(131) 39.77  38.48        0          0         0         0          0          0            0
      ERROR IN POWRF  BASE<0     A = 600100032326 4723 CALL FROM 72651
```

8/21/74

NASA-RI STS OH25A

V418-83A

AEDC(ARO,INC.) ARNOLD AFS, TENNESSEE
VON KARMAN GAS DYNAMICS FACILITY
50 INCH HYPERSONIC TUNNEL R

GROUP	CONFIG	MODEL	MACH NO	PO(PSIA)	TO(DEG R)	ALPHA-MODEL	ALPHA-SECTOR	ALPHA-PREBEND	ROLL-MODEL	YAW
23	2	40 PERCENT	7.90	110.8	1271	30.03	-.03	30.00	180.00	-.00

T-INF (DEG R)	P-INF (PSIA)	Q-INF (PSIA)	V-INF (FT/SEC)	RHO-INF (SLUGS/FT3)	MU-INF (LB-SEC/FT2)	RE/FT (FT-1)	HREF (R= .0175FT)	STREF (R= .0175FT)
94.3	.012	.538	3759	1.095E-05	7.591E-08	5.424E 05	1.794E-02	5.495E-02

CAMERA TOP(T)	ROLL NO	PAINT TEMP (DEG F)	INITIAL TEMP (DEG F)	SQUARE ROOT (RHOXCXK)	TBAR(TO)	BETA(TO)
	346	131	0	0	0	0

	PIC NO	TIME	DELTIME	H(TO)	H(TO)/HREF	H(.9TO)	H(.9TO)/HREF	H(.867TO)	H(.867TO)/HREF	ST(TO)
T	7482(131)	.03		MODEL HAS NOT REACHED CENTERLINE						
T	7483(131)	1.00		MODEL HAS NOT REACHED CENTERLINE						
T	7484(131)	2.03		MODEL HAS NOT REACHED CENTERLINE						
INJECT TIME =		2.23								
T	7485(131)	3.08	1.83	0	0	0	0	0	0	0
T	7486(131)	4.13	2.88	0	0	0	0	0	0	0
T	7487(131)	5.16	3.91	0	0	0	0	0	0	0
T	7488(131)	6.21	4.96	0	0	0	0	0	0	0
T	7489(131)	7.26	6.01	0	0	0	0	0	0	0
T	7490(131)	8.31	7.06	0	0	0	0	0	0	0
T	7491(131)	9.36	8.11	0	0	0	0	0	0	0
T	7492(131)	10.41	9.16	0	0	0	0	0	0	0
T	7493(131)	11.46	10.21	0	0	0	0	0	0	0
T	7494(131)	12.51	11.26	0	0	0	0	0	0	0
T	7495(131)	13.57	12.32	0	0	0	0	0	0	0
T	7496(131)	14.62	13.37	0	0	0	0	0	0	0
T	7497(131)	15.67	14.42	0	0	0	0	0	0	0
T	7498(131)	16.72	15.47	0	0	0	0	0	0	0
T	7499(131)	17.77	16.52	0	0	0	0	0	0	0
T	7500(131)	18.82	17.57	0	0	0	0	0	0	0
T	7501(131)	19.87	18.62	0	0	0	0	0	0	0
T	7502(131)	20.92	19.67	0	0	0	0	0	0	0
T	7503(131)	21.98	20.72	0	0	0	0	0	0	0
T	7504(131)	23.03	21.78	0	0	0	0	0	0	0
T	7505(131)	24.08	22.83	0	0	0	0	0	0	0
T	7506(131)	25.10	23.85	0	0	0	0	0	0	0

```
                                        ****************
                                        * UNCLASSIFIED *
                                        ****************
                                              8/21/74

NASA-RI STS OH25A                    AFDC(ARO,INC.) ARNOLD AFS, TENNESSEE
                                      VON KARMAN GAS DYNAMICS FACILITY
V418-83A                                 50 INCH HYPERSONIC TUNNEL B

GROUP  CONFIG    MODEL      MACH NO   PO(PSIA)  TO(DEG R)  ALPHA-MODEL  ALPHA-SECTOR  ALPHA-PREBEND  ROLL-MODEL  YAW
  23     2   40 PERCENT      7.90      111.9      1271        30.03         -.03          30.00        180.00     -.00

 T-INF    P-INF    Q-INF    V-INF     RHO-INF      MU-INF       RE/FT      HREF          STREF
(DEG R)  (PSIA)   (PSIA)   (FT/SEC)  (SLUGS/FT3)  (LB-SEC/FT2)  (FT-1)     (R= .0175FT)  (R= .0175FT)
 94.3     .012     .543     3759     1.106E-05    7.593E-08   5.476E 05   1.803E-02     5.469E-02

CAMERA        ROLL NO  PAINT TEMP (DEG F)  INITIAL TEMP (DEG F)  SQUARE ROOT (RHOXCXK)  TBAR(TO)  BETA(TO)
TOP(T)          346
                                 131              0                      0                     0         0

    PIC NO      TIME  DELTIME    H(TO)    H(TO)/HREF   H(.9TO)   H(.9TO)/HREF H( .867TO)  H( .867TO)/HREF  ST.(TO)
 T  7507(131)  26.16  24.90       0          0          0          0          0            0              0
 T  7508(131)  27.21  25.96       0          0          0          0          0            0              0
 T  7509(131)  28.26  27.01       0          0          0          0          0            0              0
 T  7510(131)  29.31  28.06       0          0          0          0          0            0              0
 T  7511(131)  30.36  29.11       0          0          0          0          0            0              0
 T  7512(131)  31.41  30.16       0          0          0          0          0            0              0
 T  7513(131)  32.46  31.21       0          0          0          0          0            0              0
 T  7514(131)  33.51  32.26       0          0          0          0          0            0              0
 T  7515(131)  34.56  33.31       0          0          0          0          0            0              0
 T  7516(131)  35.62  34.37       0          0          0          0          0            0              0
 T  7517(131)  36.67  35.42       0          0          0          0          0            0              0
 T  7518(131)  37.72  36.47       0          0          0          0          0            0              0
               38.54          MODEL HAS LEFT CENTERLINE
 T  7519(131)  38.77  37.52       0          0          0          0          0            0              0
 T  7520(131)  39.82  38.57       0          0          0          0          0            0              0
 T  7521(131)  40.87  39.62       0          0          0          0          0            0              0
 T  7522(131)  41.92  40.67       0          0          0          0          0            0              0
 T  7523(131)  42.97  41.72       0          0          0          0          0            0              0
 T  7524(131)  44.03  42.78       0          0          0          0          0            0              0
       ERROR IN POWRF  BASE<0     A = 6001242066733751 CALL FROM 72651
```

8/21/74

NASA-RI STS OH25A

AEDC(ARO,INC.) ARNOLD AFS, TENNESSEE
VON KARMAN GAS DYNAMICS FACILITY
50 INCH HYPERSONIC TUNNEL H

V41B-83A

GROUP	CONFIG	MODEL	MACH NO	PO(PSIA)	TO(DEG R)	ALPHA-MODEL	ALPHA-SECTOR	ALPHA-PREBEND	ROLL-MODEL	YAW
24	2	40 PERCENT	7.90	111.2	1271	40.02	-10.02	30.00	180.00	-.00

T-INF (DEG R)	P-INF (PSIA)	Q-INF (PSIA)	V-INF (FT/SEC)	RHO-INF (SLUGS/FT3)	MU-INF (LB-SEC/FT2)	RE/FT (FT-1)	HREF (R= .0175FT)	STREF (R= .0175FT)
94.3	.012	.540	3759	1.099E-05	7.592E-08	5.442E 05	1.797E-02	5.486E-02

CAMERA	ROLL NO	PAINT TEMP (DEG F)	INITIAL TEMP (DEG F)	SQUARE ROOT (RHOXCXK)	TBAR(TO)	BETA(TO)
TOP(T)	346	131	0	0	0	0

	PIC NO	TIME	DELTIME	H(TO)	H(TO)/HREF	H(.9TO)	H(.9TO)/HREF	H(.867TO)	H(.867TO)/HREF	ST(TO)
T	7525(131)	.03		MODEL HAS NOT REACHED CENTERLINE						
T	7526(131)	1.00		MODEL HAS NOT REACHED CENTERLINE						
T	7527(131)	2.03		MODEL HAS NOT REACHED CENTERLINE						
INJECT TIME =		2.23								
T	7528(131)	3.08	1.83	0	0	0	0	0	0	0
T	7529(131)	4.10	2.85	0	0	0	0	0	0	0
T	7530(131)	5.16	3.91	0	0	0	0	0	0	0
T	7531(131)	6.21	4.96	0	0	0	0	0	0	0
T	7532(131)	7.26	6.01	0	0	0	0	0	0	0
T	7533(131)	8.31	7.06	0	0	0	0	0	0	0
T	7534(131)	9.36	8.11	0	0	0	0	0	0	0
T	7535(131)	10.41	9.16	0	0	0	0	0	0	0
T	7536(131)	11.46	10.21	0	0	0	0	0	0	0
T	7537(131)	12.51	11.26	0	0	0	0	0	0	0
T	7538(131)	13.57	12.32	0	0	0	0	0	0	0
T	7539(131)	14.62	13.37	0	0	0	0	0	0	0
T	7540(131)	15.67	14.42	0	0	0	0	0	0	0
T	7541(131)	16.72	15.47	0	0	0	0	0	0	0
T	7542(131)	17.77	16.52	0	0	0	0	0	0	0
T	7543(131)	18.82	17.57	0	0	0	0	0	0	0
T	7544(131)	19.87	18.62	0	0	0	0	0	0	0
T	7545(131)	20.92	19.67	0	0	0	0	0	0	0
T	7546(131)	21.95	20.70	0	0	0	0	0	0	0
T	7547(131)	23.00	21.75	0	0	0	0	0	0	0
T	7548(131)	24.05	22.80	0	0	0	0	0	0	0
T	7549(131)	25.10	23.85	0	0	0	0	0	0	0

```
                                   ****************
                                   * UNCLASSIFIED *
                                   ****************
                                        8/21/74

NASA-RI STS OH25A                  AEDC(ARO.INC.) ARNOLD AFS, TENNESSEE
                                   VON KARMAN GAS DYNAMICS FACILITY
V419-83A                              50 INCH HYPERSONIC TUNNEL A

GROUP  CONFIG    MODEL      MACH NO   PO(PSIA)  TO(DEG R)  ALPHA-MODEL  ALPHA-SECTOR  ALPHA-PREBEND  ROLL-MODEL  YAW
  24     2    40 PERCENT     7.90      111.9      1272        40.02       -10.02         30.00        180.00     -.00

 T-INF    P-INF    Q-INF    V-INF     RHO-INF     MU-INF      RE/FT      HREF          STREF
(DEG R)   (PSIA)   (PSIA)   (FT/SEC)  (SLUGS/FT3) (LB-SEC/FT2) (FT-1)    (R= .0175FT)  (R= .0175FT)
 94.3      .012     .543    3760      1.106E-05   7.594E-08   5.474E 05  1.803E-02     5.470E-02

CAMERA      ROLL NO  PAINT TEMP (DEG F)  INITIAL TEMP (DEG F)  SQUARE ROOT (RHOXCXK)  TBAR(TO)  BETA(TO)
TOP(T)       246
                        131                   0                      0                     0         0

   PIC NO      TIME DELTIME    H(TO)    H(TO)/HREF  H(.9TO)  H(.9TO)/HREF H( .867TO)  H( .867TO)/HREF  ST(IO)
T  7550(131)  26.16  24.91      0          0         0         0          0            0             0
T  7551(131)  27.21  25.96      0          0         0         0          0            0             0
T  7552(131)  28.26  27.01      0          0         0         0          0            0             0
T  7553(131)  29.31  28.06      0          0         0         0          0            0             0
T  7554(131)  30.36  29.11      0          0         0         0          0            0             0
T  7555(131)  31.41  30.16      0          0         0         0          0            0             0
T  7556(131)  32.46  31.21      0          0         0         0          0            0             0
T  7557(131)  33.51  32.26      0          0         0         0          0            0             0
T  7558(131)  34.56  33.31      0          0         0         0          0            0             0
T  7559(131)  35.62  34.37      0          0         0         0          0            0             0
T  7560(131)  36.67  35.42      0          0         0         0          0            0             0
T  7561(131)  37.72  36.47      0          0         0         0          0            0             0
T  7562(131)  38.77  37.52      0          0         0         0          0            0             0
T  7563(131)  39.82  38.57      0          0         0         0          0            0             0
T  7564(131)  40.85  39.60      0          0         0         0          0            0             0
T  7565(131)  41.50  40.65      0          0         0         0          0            0             0
              42.00          MODEL HAS LEFT CENTERLINE
T  7566(131)  42.95  41.70      0          0         0         0          0            0             0
T  7567(131)  44.00  42.75      0          0         0         0          0            0             0
        ERROR IN POWRF  BASE<0      A = 6001000117201053 CALL FROM 72651
```

8/21/74

NASA-RI STS OH25A

V418-83A

AEDC(ARO,INC.) ARNOLD AFS, TENNESSEE
VON KARMAN GAS DYNAMICS FACILITY
50 INCH HYPERSONIC TUNNEL A

GROUP	CONFIG	MODEL	MACH-NO	PO(PSIA)	TO(DEG R)	ALPHA-MODEL	ALPHA-SECTOR	ALPHA-PREBEND	ROLL-MODEL	YAW
25	3	BODY FLUSH	7.90	111.3	1272	30.01	-.01	30.00	180.00	-.00

T-INF (DEG R)	P-INF (PSIA)	Q-INF (PSIA)	V-INF (FT/SEC)	RHO-INF (SLUGS/FT3)	MU-INF (LB-SEC/FT2)	RE/FT (FT-1)	HREF (R= .0175FT)	STREF (R= .0175FT)
94.3	.012	.540	3760	1.100E-05	7.595E-08	5.444E 05	1.798E-02	5.484E-02

CAMERA	ROLL NO	PAINT TEMP (DEG F)	INITIAL TEMP (DEG F)	SQUARE ROOT (RHOACXK)	TBAR(TO)	BETA(TO)
TOP(T)	346	131	0	0	0	0

	PIC NO	TIME	DELTIME	H(TO)	H(TO)/HREF	H(.9TO)	H(.9TO)/HREF	H(.867TO)	H(.867TO)/HREF	ST(TO)
T	7568(131)	.03		MODEL HAS NOT REACHED CENTERLINE						
T	7569(131)	1.00		MODEL HAS NOT REACHED CENTERLINE						
T	7570(131)	2.03		MODEL HAS NOT REACHED CENTERLINE						
INJECT TIME =			2.18							
T	7571(131)	3.05	1.83	0	0	0	0	0	0	0
T	7572(131)	4.10	2.88	0	0	0	0	0	0	0
T	7573(131)	5.16	3.93	0	0	0	0	0	0	0
T	7574(131)	6.21	4.98	0	0	0	0	0	0	0
T	7575(131)	7.26	6.04	0	0	0	0	0	0	0
T	7576(131)	8.31	7.09	0	0	0	0	0	0	0
T	7577(131)	9.36	8.14	0	0	0	0	0	0	0
T	7578(131)	10.41	9.19	0	0	0	0	0	0	0
T	7579(131)	11.46	10.24	0	0	0	0	0	0	0
T	7580(131)	12.51	11.29	0	0	0	0	0	0	0
T	7581(131)	13.57	12.34	0	0	0	0	0	0	0
T	7582(131)	14.62	13.39	0	0	0	0	0	0	0
T	7583(131)	15.67	14.45	0	0	0	0	0	0	0
T	7584(131)	16.69	15.47	0	0	0	0	0	0	0
T	7585(131)	17.77	16.55	0	0	0	0	0	0	0
T	7586(131)	18.80	17.57	0	0	0	0	0	0	0
T	7587(131)	19.85	18.63	0	0	0	0	0	0	0
T	7588(131)	20.90	19.68	0	0	0	0	0	0	0
T	7589(131)	21.95	20.73	0	0	0	0	0	0	0
T	7590(131)	23.00	21.78	0	0	0	0	0	0	0
T	7591(131)	24.05	22.83	0	0	0	0	0	0	0
T	7592(131)	25.10	23.88	0	0	0	0	0	0	0

```
                                   ****************
                                   * UNCLASSIFIED *
                                   ****************
                                        8/21/74

NASA-RI STS OH25A                  AEDC(ARO,INC.) ARNOLD AFS, TENNESSEE
                                   VON KARMAN GAS DYNAMICS FACILITY
V41B-83A                             50 INCH HYPERSONIC TUNNEL A

GROUP  CONFIG   MODEL      MACH NO   PO(PSIA)  TO(DEG R)  ALPHA-MODEL  ALPHA-SECTOR  ALPHA-PREBEND  ROLL-MODEL  YAW
  25     3    BODY FLUSH    7.90      112.2      1272        30.01         -.01          30.00        180.00     -.00

 T-INF    P-INF.   Q-INF    V-INF     RHO-INF      MU-INF        RE/FT      HREF          STREF
(DEG R)   (PSIA)   (PSIA)  (FT/SEC)  (SLUGS/FT3)  (LB-SEC/FT2)   (FT-1)   (R= .0175FT)  (R= .0175FT)
 94.3      .012     .545    3760     1.109E-05    7.595E-08    5.48HE 05  1.805E-02     5.463E-02

CAMERA      ROLL NO  PAINT TEMP (DEG F)   INITIAL TEMP (DEG F)   SQUARE ROOT (RHOXCXK)   TRAR(TO)   BETA(TO)
TOP(T)        346
                          131                    0                       0                     0          0

   PIC NO      TIME DELTIME     H(TO)     H(TO)/HREF   H(.9TO)   H(.9TO)/HREF H( .867TO)  H( .867TO)/HREF  ST(IO)
T  7593(131)  26.16  24.93       0          0           0          0           0           0              0
T  7594(131)  27.21  25.98       0          0           0          0           0           0              0
T  7595(131)  28.26  27.04       0          0           0          0           0           0              0
T  7596(131)  29.31  28.09       0          0           0          0           0           0              0
T  7597(131)  30.36  29.14       0          0           0          0           0           0              0
T  7598(131)  31.41  30.19       0          0           0          0           0           0              0
T  7599(131)  32.46  31.24       0          0           0          0           0           0              0
T  7600(131)  33.51  32.29       0          0           0          0           0           0              0
T  7601(131)  34.56  33.34       0          0           0          0           0           0              0
T  7602(131)  35.62  34.39       0          0           0          0           0           0              0
T  7603(131)  36.67  35.44       0          0           0          0           0           0              0
T  7604(131)  37.72  36.50       0          0           0          0           0           0              0
              38.07          MODEL HAS LEFT CENTERLINE
T  7605(131)  38.74  37.52       0          0           0          0           0           0              0
      ERROR IN FOWRF  BASE<0      A = 6001242123461063 CALL FROM 72651
```

8/21/74

NASA-RI STS OH25A

V418-83A

AEDC(ARO,INC.) ARNOLD AFS, TENNESSEE
VON KARMAN GAS DYNAMICS FACILITY
50 INCH HYPERSONIC TUNNEL B

GROUP	CONFIG	MODEL	MACH NO	PO(PSIA)	TO(DEG R)	ALPHA-MODEL	ALPHA-SECTOR	ALPHA-PREBEND	ROLL-MODEL	YAW
26	3	ROCY FLUSH	7.90	111.4	1272	40.02	-10.02	30.00	180.00	-.00

T-INF (DEG R)	P-INF (PSIA)	Q-INF (PSIA)	V-INF (FT/SEC)	RHO-INF (SLUGS/FT3)	MU-INF (LB-SEC/FT2)	RE/FT (FT-1)	HREF (R= .0175FT)	STREF (R= .0175FT)
94.3	.012	.541	3760	1.101E-05	7.595E-08	5.449E 05	1.799E-02	5.482E-02

CAMERA TOP(T)	ROLL NO	PAINT TEMP (DEG F)	INITIAL TEMP (DEG F)	SQUARE ROOT (RHOACAK)	TBAR(TO)	BETA(TO)
	346	131	0	0	0	0

	PIC NO	TIME	DELTIME	H(TO)	H(TO)/HREF	H(.9TO)	H(.9TO)/HREF	H(.867TO)	H(.867TO)/HREF	ST(TO)
T	7606(131)	.03		MODEL HAS NOT REACHED CENTERLINE						
T	7607(131)	1.00		MODEL HAS NOT REACHED CENTERLINE						
T	7608(131)	2.03		MODEL HAS NOT REACHED CENTERLINE						
INJECT TIME =		2.30								
T	7609(131)	3.05	1.76	0	0	0	0	0	0	0
T	7610(131)	4.10	2.81	0	0	0	0	0	0	0
T	7611(131)	5.16	3.86	0	0	0	0	0	0	0
T	7612(131)	6.21	4.91	0	0	0	0	0	0	0
T	7613(131)	7.26	5.97	0	0	0	0	0	0	0
T	7614(131)	8.31	7.02	0	0	0	0	0	0	0
T	7615(131)	9.36	8.07	0	0	0	0	0	0	0
T	7616(131)	10.41	9.12	0	0	0	0	0	0	0
T	7617(131)	11.46	10.17	0	0	0	0	0	0	0
T	7618(131)	12.51	11.22	0	0	0	0	0	0	0
T	7619(131)	13.57	12.27	0	0	0	0	0	0	0
T	7620(131)	14.62	13.32	0	0	0	0	0	0	0
T	7621(131)	15.67	14.39	0	0	0	0	0	0	0
T	7622(131)	16.72	15.43	0	0	0	0	0	0	0
T	7623(131)	17.77	16.48	0	0	0	0	0	0	0
T	7624(131)	18.80	17.50	0	0	0	0	0	0	0
T	7625(131)	19.85	18.56	0	0	0	0	0	0	0
T	7626(131)	20.50	19.61	0	0	0	0	0	0	0
T	7627(131)	21.95	20.66	0	0	0	0	0	0	0
T	7628(131)	23.00	21.71	0	0	0	0	0	0	0
T	7629(131)	24.05	22.76	0	0	0	0	0	0	0
T	7630(131)	25.10	23.81	0	0	0	0	0	0	0

****
* UNCLASSIFIED *
****

8/21/74

NASA-RI STS CH25A

V41R-83A

AEDC(ARO,INC.) ARNOLD AFS, TENNESSEE
VON KARMAN GAS DYNAMICS FACILITY
50 INCH HYPERSONIC TUNNEL H

GROUP	CONFIG	MODEL	MACH NO	PO(PSIA)	TO(DEG R)	ALPHA-MODEL	ALPHA-SECTOR	ALPHA-PREBEND	ROLL-MODEL	YAW
26	3	BODY FLUSH	7.90	112.2	1272	40.02	-10.02	30.00	180.00	-.00

T-INF (DEG R)	P-INF (PSIA)	Q-INF (PSIA)	V-INF (FT/SEC)	RHO-INF (SLUGS/FT3)	MU-INF (LB-SEC/FT2)	RE/FT (FT-1)	HREF (R= .0175FT)	STREF (R= .0175FT)
94.3	.012	.545	3760	1.109E-05	7.595E-08	5.488E 05	1.805E-02	5.463E-02

CAMERA	ROLL NO	PAINT TEMP (DEG F)	INITIAL TEMP (DEG F)	SQUARE ROOT (RHOXCXK)	TBAR(TO)	BETA(TO)
IOP(T)	246					
		131	0	0	0	0

	PIC NO	TIME	DELTIME	H(TO)	H(TO)/HREF	H(.9TO)	H(.9TO)/HREF	H(.867TO)	H(.867TO)/HREF	ST(IO)
T	7631(131)	26.16	24.86	0	0	0	0	0	0	0
T	7632(131)	27.21	25.91	0	0	0	0	0	0	0
T	7633(131)	28.26	26.96	0	0	0	0	0	0	0
T	7634(131)	29.31	28.02	0	0	0	0	0	0	0
T	7635(131)	30.36	29.07	0	0	0	0	0	0	0
T	7636(131)	31.41	30.12	0	0	0	0	0	0	0
T	7637(131)	32.46	31.17	0	0	0	0	0	0	0
T	7638(131)	33.51	32.22	0	0	0	0	0	0	0
T	7639(131)	34.56	33.27	0	0	0	0	0	0	0
T	7640(131)	35.62	34.32	0	0	0	0	0	0	0
T	7641(131)	36.67	35.37	0	0	0	0	0	0	0
T	7642(131)	37.72	36.43	0	0	0	0	0	0	0
T	7643(131)	38.74	37.45	0	0	0	0	0	0	0
T	7644(131)	39.80	38.50	0	0	0	0	0	0	0
T	7645(131)	40.85	39.55	0	0	0	0	0	0	0
		41.05	MODEL HAS LEFT CENTERLINE							
T	7646(131)	41.90	40.61	0	0	0	0	0	0	0
T	7647(131)	42.95	41.66	0	0	0	0	0	0	0

ERROR IN POWRF BASE<0 A = 6001000064653215 CALL FROM 72651

8/21/74

NASA-RI STS OH25A

V418-83A

AEDC(ARO,INC.) ARNOLD AFS, TENNESSEE
VON KARMAN GAS DYNAMICS FACILITY
50 INCH HYPERSONIC TUNNEL B

GROUP	CONFIG	MODEL	MACH NO	PO(PSIA)	TO(DEG R)	ALPHA-MODEL	ALPHA-SECTOR	ALPHA-PREBEND	ROLL-MODEL	YAW
27	4	LEADING EDGE	7.90	111.1	1272	30.01	-.01	30.00	180.00	-.00

T-INF (DEG R)	P-INF (PSIA)	Q-INF (PSIA)	V-INF (FT/SEC)	RHO-INF (SLUGS/FT3)	MU-INF (LB-SEC/FT2)	RE/FT (FT-1)	HREF (R= .0175FT)	STREF (R= .0175FT)
94.3	.012	.539	3759	1.098E-05	7.594E-08	5.436E 05	1.797E-02	5.489E-02

CAMERA	ROLL NO	PAINT TEMP (DEG F)	INITIAL TEMP (DEG F)	SQUARE ROOT (RHOXCXK)	TBAR(TO)	BETA(TO)
TOP(T)	346	131	0	0	0	0

	PIC NO	TIME	DELTIME	H(TO)	H(TO)/HREF	H(.9TO)	H(.9TO)/HREF	H(.867TO)	H(.867TO)/HREF	ST(TO)
T	7648(131)	.03		MODEL HAS NOT REACHED CENTERLINE						
T	7649(131)	1.00		MODEL HAS NOT REACHED CENTERLINE						
T	7650(131)	2.03		MODEL HAS NOT REACHED CENTERLINE						
INJECT TIME =		2.25								
T	7651(131)	3.08	1.81	0	0	0	0	0	0	0
T	7652(131)	4.13	2.87	0	0	0	0	0	0	0
T	7653(131)	5.16	3.89	0	0	0	0	0	0	0
T	7654(131)	6.21	4.94	0	0	0	0	0	0	0
T	7655(131)	7.26	5.99	0	0	0	0	0	0	0
T	7656(131)	8.31	7.04	0	0	0	0	0	0	0
T	7657(131)	9.36	8.10	0	0	0	0	0	0	0
T	7658(131)	10.41	9.15	0	0	0	0	0	0	0
T	7659(131)	11.46	10.20	0	0	0	0	0	0	0
T	7660(131)	12.51	11.25	0	0	0	0	0	0	0
T	7661(131)	13.57	12.30	0	0	0	0	0	0	0
T	7662(131)	14.62	13.35	0	0	0	0	0	0	0
T	7663(131)	15.67	14.40	0	0	0	0	0	0	0
T	7664(131)	16.72	15.45	0	0	0	0	0	0	0
T	7665(131)	17.77	16.51	0	0	0	0	0	0	0
T	7666(131)	18.82	17.56	0	0	0	0	0	0	0
T	7667(131)	19.87	18.61	0	0	0	0	0	0	0
T	7668(131)	20.92	19.66	0	0	0	0	0	0	0
T	7669(131)	21.98	20.71	0	0	0	0	0	0	0
T	7670(131)	23.03	21.76	0	0	0	0	0	0	0
T	7671(131)	24.05	22.79	0	0	0	0	0	0	0
T	7672(131)	25.10	23.84	0	0	0	0	0	0	0

****
* UNCLASSIFIED *
****

8/21/74

NASA-RI STS OH25A

V418-83A

AEDC(ARO,INC.) ARNOLD AFS, TENNESSEE
VON KARMAN GAS DYNAMICS FACILITY
50 INCH HYPERSONIC TUNNEL B

GROUP	CONFIG	MODEL	MACH NO	PO(PSIA)	TO(DEG R)	ALPHA-MODEL	ALPHA-SECTOR	ALPHA-PREBEND	ROLL-MODEL	YAW
27	4	LEADING EDGE	7.90	111.7	1272	30.01	-.01	30.00	180.00	-.00

T-INF (DEG R)	P-INF (PSIA)	Q-INF (PSIA)	V-INF (FT/SEC)	RHO-INF (SLUGS/FT3)	MU-INF (LB-SEC/FT2)	RE/FT (FT-1)	HREF (R= .0175FT)	STREF (R= .0175FT)
94.3	.012	.542	3759	1.104E-05	7.594E-08	5.465E 05	1.801E-02	5.474E-02

CAMERA TOP(T)	ROLL NO	PAINT TEMP (DEG F)	INITIAL TEMP (DEG F)	SQUARE ROOT (RHOXCXK)	TBAR(TO)	BETA(TO)
	346	131	0	0	0	0

	PIC NO	TIME	DELTIME	H(TO)	H(TO)/HREF	H(.9TO)	H(.9TO)/HREF	H(.867TO)	H(.867TO)/HREF	ST(TO)
T	7673(131)	26.16	24.89	0	0	0	0	0	0	0
T	7674(131)	27.21	25.94	0	0	0	0	0	0	0
T	7675(131)	28.26	26.99	0	0	0	0	0	0	0
T	7676(131)	29.31	28.04	0	0	0	0	0	0	0
T	7677(131)	30.36	29.10	0	0	0	0	0	0	0
T	7678(131)	31.41	30.15	0	0	0	0	0	0	0
T	7679(131)	32.46	31.20	0	0	0	0	0	0	0
T	7680(131)	33.51	32.25	0	0	0	0	0	0	0
T	7681(131)	34.56	33.30	0	0	0	0	0	0	0
T	7682(131)	35.62	34.35	0	0	0	0	0	0	0
T	7683(131)	36.67	35.40	0	0	0	0	0	0	0
T	7684(131)	37.72	36.45	0	0	0	0	0	0	0
T	7685(131)	38.77	37.50	0	0	0	0	0	0	0
T	7686(131)	39.82	38.56	0	0	0	0	0	0	0
T	7687(131)	40.87	39.61	0	0	0	0	0	0	0
		41.00		MODEL HAS LEFT CENTERLINE						
T	7688(131)	41.92	40.66	0	0	0	0	0	0	0
T	7689(131)	42.97	41.71	0	0	0	0	0	0	0
T	7690(131)	44.03	42.76	0	0	0	0	0	0	0

ERROR IN POWRF BASE<0 A = 6001242123461063 CALL FROM 72651

8/21/74

NASA-RI STS OH25A

V41B-83A

AEDC(ARO,INC.) ARNOLD AFS, TENNESSEE
VON KARMAN GAS DYNAMICS FACILITY
50 INCH HYPERSONIC TUNNEL A

GROUP	CONFIG	MODEL	MACH.NO	PO(PSIA)	TO(DEG R)	ALPHA-MODEL	ALPHA-SECTOR	ALPHA-PREBEND	ROLL-MODEL	YAW
28	4	LEADING EDGE	7.90	111.7	1268	40.02	-10.02	30.00	180.00	-.00

T-INF (DEG R)	P-INF (PSIA)	Q-INF (PSIA)	V-INF (FT/SEC)	RHO-INF (SLUGS/FT3)	MU-INF (LB-SEC/FT2)	RE/FT (FT-1)	HREF (R= .0175FT)	STREF (R= .0175FT)
94.1	.012	.542	3754	1.107E-05	7.573E-08	5.488E 05	1.801E-02	5.465E-02

CAMERA TOP(T)	ROLL NO	PAINT TEMP (DEG F)	INITIAL TEMP (DEG F)	SQUARE ROOT (RHOXCXK)	TBAR(TO)	BETA(TO)
	291	131	0	0	0	0

	PIC NO	TIME	DELTIME	H(TO)	H(TO)/HREF	H(.9TO)	H(.9TO)/HREF	H(.867TO)	H(.867TO)/HREF	ST(TO)
T	7750(131)	.03		MODEL HAS NOT REACHED CENTERLINE						
T	7751(131)	1.00		MODEL HAS NOT REACHED CENTERLINE						
T	7752(131)	2.03		MODEL HAS NOT REACHED CENTERLINE						
INJECT TIME =		2.30								
T	7753(131)	3.08	1.79	0	0	0	0	0	0	0
T	7754(131)	4.10	2.81	0	0	0	0	0	0	0
T	7755(131)	5.16	3.86	0	0	0	0	0	0	0
T	7756(131)	6.21	4.91	0	0	0	0	0	0	0
T	7757(131)	7.26	5.97	0	0	0	0	0	0	0
T	7758(131)	8.31	7.02	0	0	0	0	0	0	0
T	7759(131)	9.36	8.07	0	0	0	0	0	0	0
T	7760(131)	10.41	9.12	0	0	0	0	0	0	0
T	7761(131)	11.46	10.17	0	0	0	0	0	0	0
T	7762(131)	12.49	11.20	0	0	0	0	0	0	0
T	7763(131)	13.54	12.25	0	0	0	0	0	0	0
T	7764(131)	14.59	13.30	0	0	0	0	0	0	0
T	7765(131)	15.64	14.35	0	0	0	0	0	0	0
T	7766(131)	16.69	15.40	0	0	0	0	0	0	0
T	7767(131)	17.75	16.45	0	0	0	0	0	0	0
T	7768(131)	18.80	17.50	0	0	0	0	0	0	0
T	7769(131)	19.85	18.56	0	0	0	0	0	0	0
T	7770(131)	20.90	19.61	0	0	0	0	0	0	0
T	7771(131)	21.95	20.66	0	0	0	0	0	0	0
T	7772(131)	23.00	21.71	0	0	0	0	0	0	0
T	7773(131)	24.05	22.76	0	0	0	0	0	0	0
T	7774(131)	25.10	23.81	0	0	0	0	0	0	0

```
                                   ****************
                                   * UNCLASSIFIED *
                                   ****************
                                       8/21/74

NASA-RI STS OH25A                 AEDC(ARO,INC.) ARNOLD AFS, TENNESSEE
                                   VON KARMAN GAS DYNAMICS FACILITY
V41B-83A                             50 INCH HYPERSONIC TUNNEL A

GROUP  CONFIG    MODEL      MACH NO    PO(PSIA)  TO(DEG R)  ALPHA-MODEL  ALPHA-SECTOR  ALPHA-PREBEND  ROLL-MODEL  YAW
 28      4    LEADING EDGE    7.90      111.8      1268        40.02        -10.02        30.00        180.00     -.00

 T-INF    P-INF   Q-INF   V-INF     RHO-INF      MU-INF        RE/FT      HREF          STREF
(DEG R)  (PSIA)  (PSIA)  (FT/SEC)  (SLUGS/FT3)  (LB-SEC/FT2)   (FT-1)    (R= .0175FT)  (R= .0175FT)
 94.0     .012    .543    3754     1.108E-05    7.571E-08    5.495E 05   1.801E-02     5.462E-02

CAMERA        ROLL NO  PAINT TEMP (DEG F)  INITIAL TEMP (DEG F)  SQUARE ROOT (RHOXCXK)  TBAR(TO)  BETA(TO)
TOP(T)          291
                              131                0                       0                   0         0

    PIC NO      TIME DELTIME    H(TO)     H(TO)/HREF  H(.9TO)   H(.9TO)/HREF H( .867TO)  H( .867TO)/HREF  ST(TO)
T  7775(131) 26.16  24.86        0          0          0          0           0           0            0
T  7776(131) 27.18  25.89        0          0          0          0           0           0            0
T  7777(131) 28.23  26.94        0          0          0          0           0           0            0
T  7778(131) 29.28  27.99        0          0          0          0           0           0            0
T  7779(131) 30.33  29.04        0          0          0          0           0           0            0
T  7780(131) 31.39  30.09        0          0          0          0           0           0            0
T  7781(131) 32.44  31.14        0          0          0          0           0           0            0
T  7782(131) 33.49  32.20        0          0          0          0           0           0            0
T  7783(131) 34.54  33.25        0          0          0          0           0           0            0
T  7784(131) 35.59  34.30        0          0          0          0           0           0            0
T  7785(131) 36.64  35.35        0          0          0          0           0           0            0
T  7786(131) 37.69  36.40        0          0          0          0           0           0            0
T  7787(131) 38.74  37.45        0          0          0          0           0           0            0
T  7788(131) 39.80  38.50        0          0          0          0           0           0            0
T  7789(131) 40.85  39.55        0          0          0          0           0           0            0
T  7790(131) 41.87  40.59        0          0          0          0           0           0            0
             42.47          MODEL HAS LEFT CENTERLINE
T  7791(131) 42.92  41.63        0          0          0          0           0           0            0
T  7792(131) 43.98  42.68        0          0          0          0           0           0            0
      ERROR IN FOWRF  BASE<0      A = 600100032326 4723 CALL FROM 72651
```

8/21/74

NASA-RI STS OH25A

V418-83A

AEDC(ARO,INC.) ARNOLD AFS, TENNESSEE
VON KARMAN GAS DYNAMICS FACILITY
50 INCH HYPERSONIC TUNNEL B

GROUP	CONFIG	MODEL	MACH NO	PO(PSIA)	TO(DEG R)	ALPHA-MODEL	ALPHA-SECTOR	ALPHA-PREBEND	ROLL-MODEL	YAW
29	5	TRANSITION	7.90	110.1	1267	30.03	-.03	30.00	180.00	-.00

T-INF (DEG R)	P-INF (PSIA)	Q-INF (PSIA)	V-INF (FT/SEC)	RHO-INF (SLUGS/FT3)	MU-INF (LB-SEC/FT2)	RE/FT (FT-1)	HREF (R= .0175FT)	STREF (R= .0175FT)
94.0	.012	.534	3752	1.092E-05	7.564E-08	5.419E 05	1.787E-02	5.501E-02

CAMERA	ROLL NO	PAINT TEMP (DEG F)	INITIAL TEMP (DEG F)	SQUARE ROOT (RHOXCAK)	TBAR(TO)	BETA(TO)
TOP(T)	291	131	0	0	0	0

	PIC NO	TIME	DELTIME	H(TO)	H(TO)/HREF	H(.9TO)	H(.9TO)/HREF	H(.867TO)	H(.867TO)/HREF	ST(TO)
T	7793(131)	.03		MODEL HAS NOT REACHED CENTERLINE						
T	7794(131)	1.00		MODEL HAS NOT REACHED CENTERLINE						
T	7795(131)	2.03		MODEL HAS NOT REACHED CENTERLINE						
INJECT TIME =		2.35								
T	7796(131)	3.05	1.73	0	0	0	0	0	0	0
T	7797(131)	4.10	2.78	0	0	0	0	0	0	0
T	7798(131)	5.16	3.84	0	0	0	0	0	0	0
T	7799(131)	6.21	4.89	0	0	0	0	0	0	0
T	7800(131)	7.26	5.94	0	0	0	0	0	0	0
T	7801(131)	8.31	6.99	0	0	0	0	0	0	0
T	7802(131)	9.34	8.01	0	0	0	0	0	0	0
T	7803(131)	10.39	9.07	0	0	0	0	0	0	0
T	7804(131)	11.44	10.12	0	0	0	0	0	0	0
T	7805(131)	12.49	11.17	0	0	0	0	0	0	0
T	7806(131)	13.54	12.22	0	0	0	0	0	0	0
T	7807(131)	14.59	13.27	0	0	0	0	0	0	0
T	7808(131)	15.64	14.32	0	0	0	0	0	0	0
T	7809(131)	16.69	15.37	0	0	0	0	0	0	0
T	7810(131)	17.75	16.42	0	0	0	0	0	0	0
T	7811(131)	18.80	17.48	0	0	0	0	0	0	0
T	7812(131)	19.85	18.53	0	0	0	0	0	0	0
T	7813(131)	20.90	19.58	0	0	0	0	0	0	0
T	7814(131)	21.95	20.63	0	0	0	0	0	0	0
T	7815(131)	23.00	21.68	0	0	0	0	0	0	0
T	7816(131)	24.05	22.73	0	0	0	0	0	0	0
T	7817(131)	25.08	23.76	0	0	0	0	0	0	0

****
* UNCLASSIFIED *
****

8/21/74

NASA-RI STS OH25A

AEDC(ARO,INC.) ARNOLD AFS, TENNESSEE
VON KARMAN GAS DYNAMICS FACILITY
50 INCH HYPERSONIC TUNNEL B

V418-83A

GROUP	CONFIG	MODEL	MACH NO	PO(PSIA)	TO(DEG R)	ALPHA-MODEL	ALPHA-SECTOR	ALPHA-PREHEND	ROLL-MODEL	YAW
29	5	TRANSITION	7.90	111.1	1267	30.03	-.03	30.00	180.00	-.00

T-INF (DEG R)	P-INF (PSIA)	Q-INF (PSIA)	V-INF (FT/SEC)	RHO-INF (SLUGS/FT3)	MU-INF (LB-SEC/FT2)	RE/FT (FT-1)	HREF (R= .0175FT)	STREF (R= .0175FT)
94.0	.012	.539	3753	1.102E-05	7.566E-08	5.466E 05	1.795E-02	5.477E-02

CAMERA	ROLL NO	PAINT TEMP (DEG F)	INITIAL TEMP (DEG F)	SQUARE ROOT (RHOXCXK)	TRAR(TO)	BETA(TO)
TOF(T)	291	131	0	0	0	0

	PIC NO	TIME	DELTIME	H(TO)	H(TO)/HREF	H(.9TO)	H(.9TO)/HREF	H(.867TO)	H(.867TO)/HREF	ST(TO)
T	7818(131)	26.13	24.81	0	0	0	0	0	0	0
T	7819(131)	27.18	25.86	0	0	0	0	0	0	0
T	7820(131)	28.23	26.91	0	0	0	0	0	0	0
T	7821(131)	29.28	27.96	0	0	0	0	0	0	0
T	7822(131)	30.33	29.01	0	0	0	0	0	0	0
T	7823(131)	31.39	30.07	0	0	0	0	0	0	0
T	7824(131)	32.44	31.12	0	0	0	0	0	0	0
T	7825(131)	33.49	32.17	0	0	0	0	0	0	0
T	7826(131)	34.54	33.22	0	0	0	0	0	0	0
T	7827(131)	35.59	34.27	0	0	0	0	0	0	0
T	7828(131)	36.64	35.32	0	0	0	0	0	0	0
T	7829(131)	37.69	36.37	0	0	0	0	0	0	0
T	7830(131)	38.72	37.40	0	0	0	0	0	0	0
T	7831(131)	39.77	38.45	0	0	0	0	0	0	0
T	7832(131)	40.82	39.51	0	0	0	0	0	0	0
		41.75		MODEL HAS LEFT CENTERLINE						
T	7833(131)	41.87	40.55	0	0	0	0	0	0	0
T	7834(131)	42.92	41.60	0	0	0	0	0	0	0
T	7835(131)	43.98	42.65	0	0	0	0	0	0	0

ERROR IN POWRF BASE<0 A = 6001242214734237 CALL FROM 72651

ORIGINAL PAGE IS
OF POOR QUALITY

****
* UNCLASSIFIED *
****

8/21/74

NASA-RI STS OH25A

AFDC(AHO.INC.) ARNOLD AFS. TENNESSEE
VON KARMAN GAS DYNAMICS FACILITY
50 INCH HYPERSONIC TUNNEL A

V418-83A

GROUP	CONFIG	MODEL	MACH NO	PO(PSIA)	TO(DEG R)	ALPHA-MODEL	ALPHA-SECTOR	ALPHA-PREBEND	ROLL-MODEL	YAW
30	5	TRANSITION	7.90	110.6	1266	40.03	-10.03	30.00	180.00	-.00

T-INF (DEG R)	P-INF (PSIA)	Q-INF (PSIA)	V-INF (FT/SEC)	RHO-INF (SLUGS/FT3)	MU-INF (LB-SEC/FT2)	RE/FT (FT-1)	HREF (R= .0175FT)	STREF (R= .0175FT)
93.9	.012	.537	3752	1.098E-05	7.562E-08	5.445E 05	1.791E-02	5.487E-02

CAMERA TOP(T)	ROLL NO	PAINT TEMP (DEG F)	INITIAL TEMP (DEG F)	SQUARE ROOT (RHOXCXK)	TBAR(TO)	BETA(TO)
	291	131	0	0	0	0

	PIC NO	TIME	DELTIME	H(TO)	H(TO)/HREF	H(.9TO)	H(.9TO)/HREF	H(.867TO)	H(.867TO)/HREF	ST(TO)
T	7836(131)	.03		MODEL HAS NOT REACHED CENTERLINE						
T	7837(131)	1.00		MODEL HAS NOT REACHED CENTERLINE						
T	7838(131)	2.03		MODEL HAS NOT REACHED CENTERLINE						
INJECT TIME =		2.28								
T	7839(131)	3.08	1.86	0	0	0	0	0	0	0
T	7840(131)	4.10	2.83	0	0	0	0	0	0	0
T	7841(131)	5.16	3.88	0	0	0	0	0	0	0
T	7842(131)	6.21	4.93	0	0	0	0	0	0	0
T	7843(131)	7.26	5.98	0	0	0	0	0	0	0
T	7844(131)	8.31	7.03	0	0	0	0	0	0	0
T	7845(131)	9.36	8.08	0	0	0	0	0	0	0
T	7846(131)	10.41	9.13	0	0	0	0	0	0	0
T	7847(131)	11.46	10.18	0	0	0	0	0	0	0
T	7848(131)	12.49	11.21	0	0	0	0	0	0	0
T	7849(131)	13.57	12.29	0	0	0	0	0	0	0
T	7850(131)	14.59	13.31	0	0	0	0	0	0	0
T	7851(131)	15.64	14.34	0	0	0	0	0	0	0
T	7852(131)	16.69	15.42	0	0	0	0	0	0	0
T	7853(131)	17.75	16.47	0	0	0	0	0	0	0
T	7854(131)	18.80	17.52	0	0	0	0	0	0	0
T	7855(131)	19.85	18.57	0	0	0	0	0	0	0
T	7856(131)	20.90	19.62	0	0	0	0	0	0	0
T	7857(131)	21.95	20.67	0	0	0	0	0	0	0
T	7858(131)	23.00	21.72	0	0	0	0	0	0	0
T	7859(131)	24.05	22.77	0	0	0	0	0	0	0
T	7860(131)	25.10	23.82	0	0	0	0	0	0	0

****
* UNCLASSIFIED *
****

```
                                   ****************
                                   * UNCLASSIFIED *
                                   ****************
                                        8/21/74

NASA-RI STS OH25A                  AEDC(AHO.INC.) ARNOLD AFS, TENNESSEE
                                   VON KARMAN GAS DYNAMICS FACILITY
V418-83A                             50 INCH HYPERSONIC TUNNEL B

GROUP  CONFIG    MODEL      MACH NO    PO(PSIA)  TO(DEG R)  ALPHA-MODEL  ALPHA-SECTOR  ALPHA-PREBEND  ROLL-MODEL  YAW
 30      5    TRANSITION     7.90      111.6      1266        40.03       -10.03         30.00        180.00     -.00

 T-INF    P-INF   Q-INF   V-INF    RHO-INF      MU-INF       RE/FT      HREF          STREF
(DEG R)   (PSIA)  (PSIA)  (FT/SEC) (SLUGS/FT3)  (LB-SEC/FT2)  (FT-1)    (R= .0175FT)  (R= .0175FT)
 93.9     .012    .542    3752    1.107E-05    7.562E-08    5.494E 05  1.799E-02     5.463E-02

CAMERA        ROLL NO  PAINT TEMP (DEG F)   INITIAL TEMP (DEG F)   SQUARE ROOT (RHOXCXK)   TBAR(TO)   BETA(TO)
TOP(T)         291
                          .131                 0                       0                       0          0

     PIC NO      TIME  DELTIME    H(TO)    H(TO)/HREF   H(.9TO)   H(.9TO)/HREF H( .867TO)  H( .867TO)/HREF  ST(TO)
 T  7861(131)  26.16   24.88       0          0          0          0           0           0              0
 T  7862(131)  27.21   25.93       0          0          0          0           0           0              0
 T  7863(131)  28.26   26.98       0          0          0          0           0           0              0
 T  7864(131)  29.31   28.03       0          0          0          0           0           0              0
 T  7865(131)  30.36   29.08       0          0          0          0           0           0              0
 T  7866(131)  31.41   30.13       0          0          0          0           0           0              0
 T  7867(131)  32.46   31.19       0          0          0          0           0           0              0
 T  7868(131)  33.51   32.23       0          0          0          0           0           0              0
 T  7869(131)  34.56   33.29       0          0          0          0           0           0              0
 T  7870(131)  35.62   34.34       0          0          0          0           0           0              0
 T  7871(131)  36.64   35.36       0          0          0          0           0           0              0
 T  7872(131)  37.69   36.41       0          0          0          0           0           0              0
 T  7873(131)  38.74   37.47       0          0          0          0           0           0              0
               39.40            MODEL HAS LEFT CENTERLINE
 T  7874(131)  39.80   38.52       0          0          0          0           0           0              0
 T  7875(131)  40.85   39.57       0          0          0          0           0           0              0
 T  7876(131)  41.90   40.62       0          0          0          0           0           0              0
      ERROR IN POWRF  BASE<0      A = 6001000355615341 CALL FROM 72651
```

ORIGINAL PAGE IS OF POOR QUALITY

****
* UNCLASSIFIED *
****

8/21/74

NASA-RI STS OH25A

V418-83A

AEDC(ARO,INC.) ARNOLD AFS, TENNESSEE
VON KARMAN GAS DYNAMICS FACILITY
50 INCH HYPERSONIC TUNNEL B

GROUP	CONFIG	MODEL	MACH NO	PO(PSIA)	TO(DEG R)	ALPHA-MODEL	ALPHA-SECTOR	ALPHA-PREBEND	ROLL-MODEL	YAW
31	1	ORBITER	7.90	111.2	1266	30.03	-.03	30.00	180.00	-.00

T-INF (DEG R)	P-INF (PSIA)	Q-INF (PSIA)	V-INF (FT/SEC)	RHO-INF (SLUGS/FT3)	MU-INF (LB-SEC/FT2)	RE/FT (FT-1)	HREF (R= .0175FT)	STREF (R= .0175FT)
93.9	.012	.540	3750	1.104E-05	7.557E-08	5.480E 05	1.796E-02	5.471E-02

CAMERA TOP(T)	ROLL NO	PAINT TEMP (DEG F)	INITIAL TEMP (DEG F)	SQUARE ROOT (RHOXCXK)	TBAR(TO)	BETA(TO)
	291	131	0	0	0	0

	PIC NO	TIME	DELTIME	H(TO)	H(TO)/HREF	H(.9TO)	H(.9TO)/HREF	H(.867TO)	H(.867TO)/HREF	ST(TO)
T	7877(131)	.03		MODEL HAS NOT REACHED CENTERLINE						
T	7878(131)	1.00		MODEL HAS NOT REACHED CENTERLINE						
T	7879(131)	2.03		MODEL HAS NOT REACHED CENTERLINE						
INJECT TIME =		2.30								
T	7880(131)	3.08	1.79	0	0	0	0	0	0	0
T	7881(131)	4.13	2.84	0	0	0	0	0	0	0
T	7882(131)	5.16	3.86	0	0	0	0	0	0	0
T	7883(131)	6.21	4.91	0	0	0	0	0	0	0
T	7884(131)	7.26	5.97	0	0	0	0	0	0	0
T	7885(131)	8.31	7.02	0	0	0	0	0	0	0
T	7886(131)	9.36	8.07	0	0	0	0	0	0	0
T	7887(131)	10.41	9.12	0	0	0	0	0	0	0
T	7888(131)	11.46	10.17	0	0	0	0	0	0	0
T	7889(131)	12.51	11.22	0	0	0	0	0	0	0
T	7890(131)	13.57	12.27	0	0	0	0	0	0	0
T	7891(131)	14.62	13.32	0	0	0	0	0	0	0
T	7892(131)	15.67	14.38	0	0	0	0	0	0	0
T	7893(131)	16.69	15.40	0	0	0	0	0	0	0
T	7894(131)	17.75	16.45	0	0	0	0	0	0	0
T	7895(131)	18.80	17.50	0	0	0	0	0	0	0
T	7896(131)	19.85	18.56	0	0	0	0	0	0	0
T	7897(131)	20.90	19.61	0	0	0	0	0	0	0
T	7898(131)	21.95	20.66	0	0	0	0	0	0	0
T	7899(131)	23.00	21.71	0	0	0	0	0	0	0
T	7900(131)	24.05	22.76	0	0	0	0	0	0	0
T	7901(131)	25.10	23.81	0	0	0	0	0	0	0

****
* UNCLASSIFIED *
****

****
* UNCLASSIFIED *
****

8/21/74

NASA-RI STS OH25A

V41B-83A

AFDC(ARO,INC.) ARNOLD AFS, TENNESSEE
VON KARMAN GAS DYNAMICS FACILITY
50 INCH HYPERSONIC TUNNEL B

GROUP	CONFIG	MODEL	MACH NO	PO(PSIA)	TO(DEG R)	ALPHA-MODEL	ALPHA-SECTOR	ALPHA-PREBEND	ROLL-MODEL	YAW
31	1	OREITER	7.90	111.9	1266	30.03	-.03	30.00	180.00	-.00

T-INF (DEG R)	P-INF (PSIA)	Q-INF (PSIA)	V-INF (FT/SEC)	RHO-INF (SLUGS/FT3)	MU-INF (LB-SEC/FT2)	RE/FT (FT-1)	HREF (R= .0175FT)	STREF (R= .0175FT)
93.9	.012	.543	3751	1.111E-05	7.558E-08	5.513E 05	1.802E-02	5.454E-02

CAMERA	ROLL NO	PAINT TEMP (DEG F)	INITIAL TEMP (DEG F)	SQUARE ROOT (RHOXCXK)	TBAR(TO)	BETA(TO)
TOP(T)	291	131	0	0	0	0

	PIC NO	TIME	DELTIME	H(TO)	H(TO)/HREF	H(.9TO)	H(.9TO)/HREF	H(.867TO)	H(.867TO)/HREF	ST(TO)
T	7902(131)	26.16	24.86	0	0	0	0	0	0	0
T	7903(131)	27.21	25.91	0	0	0	0	0	0	0
T	7904(131)	28.23	26.94	0	0	0	0	0	0	0
T	7905(131)	29.28	27.99	0	0	0	0	0	0	0
T	7906(131)	30.33	29.04	0	0	0	0	0	0	0
T	7907(131)	31.39	30.09	0	0	0	0	0	0	0
T	7908(131)	32.44	31.14	0	0	0	0	0	0	0
T	7909(131)	33.49	32.20	0	0	0	0	0	0	0
T	7910(131)	34.54	33.25	0	0	0	0	0	0	0
T	7911(131)	35.59	34.30	0	0	0	0	0	0	0
T	7912(131)	36.64	35.35	0	0	0	0	0	0	0
T	7913(131)	37.69	36.40	0	0	0	0	0	0	0
T	7914(131)	38.74	37.45	0	0	0	0	0	0	0
T	7915(131)	39.80	38.50	0	0	0	0	0	0	0
T	7916(131)	40.85	39.55	0	0	0	0	0	0	0
		41.75		MODEL HAS LEFT CENTERLINE						
T	7917(131)	41.90	40.61	0	0	0	0	0	0	0
T	7918(131)	42.95	41.66	0	0	0	0	0	0	0
T	7919(131)	44.00	42.71	0	0	0	0	0	0	0
T	7920(131)	45.05	43.76	0	0	0	0	0	0	0

ERROR IN FOWRF BASE<0 A = 6001242214734237 CALL FROM 72651

8/21/74

NASA-RI STS OH25A

V418-83A

AEDC(AHO,INC.) ARNOLD AFS, TENNESSEE
VON KARMAN GAS DYNAMICS FACILITY
50 INCH HYPERSONIC TUNNEL B

GROUP	CONFIG	MODEL	MACH NO	PO(PSIA)	TO(DEG R)	ALPHA-MODEL	ALPHA-SECTOR	ALPHA-PREBEND	ROLL-MODEL	YAW
32	1	ORBITER	7.90	111.6	1265	40.03	-10.03	30.00	180.00	-.00

T-INF (DEG R)	P-INF (PSIA)	Q-INF (PSIA)	V-INF (FT/SEC)	RHO-INF (SLUGS/FT3)	MU-INF (LB-SEC/FT2)	RE/FT (FT-1)	HREF (R= .0175FT)	STREF (R= .0175FT)
93.8	.012	.542	3750	1.109E-05	7.555E-08	5.502E 05	1.799E-02	5.460E-02

CAMERA TOP(T)	ROLL NO	PAINT TEMP (DEG F)	INITIAL TEMP (DEG F)	SQUARE ROOT (RHOXCXK)	TBAR(TO)	BETA(TO)
	291	131	0	0	0	0

	PIC NO	TIME	DELTIME	H(TO)	H(TO)/HREF	H(.9TO)	H(.9TO)/HREF	H(.867TO)	H(.867TO)/HREF	ST(1))
T	7921(131)	.03		MODEL HAS NOT REACHED CENTERLINE						
T	7922(131)	1.00		MODEL HAS NOT REACHED CENTERLINE						
T	7923(131)	2.05		MODEL HAS NOT REACHED CENTERLINE						
INJECT TIME =		2.20								
T	7924(131)	3.09	1.84	0	0	0	0	0	0	0
T	7925(131)	4.13	2.89	0	0	0	0	0	0	0
T	7926(131)	5.18	3.94	0	0	0	0	0	0	0
T	7927(131)	6.23	5.00	0	0	0	0	0	0	0
T	7928(131)	7.28	6.05	0	0	0	0	0	0	0
T	7929(131)	8.31	7.07	0	0	0	0	0	0	0
T	7930(131)	9.36	8.12	0	0	0	0	0	0	0
T	7931(131)	10.41	9.18	0	0	0	0	0	0	0
T	7932(131)	11.46	10.23	0	0	0	0	0	0	0
T	7933(131)	12.51	11.29	0	0	0	0	0	0	0
T	7934(131)	13.57	12.33	0	0	0	0	0	0	0
T	7935(131)	14.62	13.38	0	0	0	0	0	0	0
T	7936(131)	15.67	14.43	0	0	0	0	0	0	0
T	7937(131)	16.72	15.48	0	0	0	0	0	0	0
T	7938(131)	17.77	16.53	0	0	0	0	0	0	0
T	7939(131)	18.82	17.59	0	0	0	0	0	0	0
T	7940(131)	19.87	18.64	0	0	0	0	0	0	0
T	7941(131)	20.92	19.69	0	0	0	0	0	0	0
T	7942(131)	21.95	20.71	0	0	0	0	0	0	0
T	7943(131)	23.00	21.76	0	0	0	0	0	0	0
T	7944(131)	24.05	22.82	0	0	0	0	0	0	0
T	7945(131)	25.10	23.87	0	0	0	0	0	0	0

```
                                        ****************
                                        * UNCLASSIFIED *
                                        ****************
                                              8/21/74

NASA-RI STS OH25A                   AEDC(ARO.INC.) ARNOLD AFS. TENNESSEE
                                    VON KARMAN GAS DYNAMICS FACILITY
V41R-83A                              50 INCH HYPERSONIC TUNNEL A

GROUP  CONFIG    MODEL      MACH NO    PO(PSIA)  TO(DEG R)  ALPHA-MODEL  ALPHA-SECTOR  ALPHA-PREBEND  ROLL-MODEL  YAW
  32      1    ORBITER       7.90      112.5      1265        40.03       -10.03         30.00        180.00     -.00

 T-INF    P-INF   Q-INF   V-INF    RHO-INF      MU-INF       RE/FT       HREF          STREF
(DEG R)  (PSIA)  (PSIA)  (FT/SEC)  (SLUGS/FT3)  (LB-SEC/FT2)  (FT-1)    (H= .0175FT)  (H= .0175FT)
 93.8     .012    .546    3750     1.117E-05    7.556E-08   5.546E 05   1.806E-02     5.438E-02

CAMERA      ROLL NO  PAINT TEMP (DEG F)  INITIAL TEMP (DEG F)  SQUARE ROOT (RHOXCAK)  TBAR(TO)  BETA(TO)
TOF(T)       291
                        131                   0                      0                     0         0

     PIC NO     TIME DELTAME     H(TO)    H(TO)/HREF   H(.9TO)   H(.9TO)/HREF H( .867TO)  H( .867TO)/HREF  ST(TO)
T  7946(131) 26.16  24.92          0          0          0          0          0          0          0
T  7947(131) 27.23  25.99          0          0          0          0          0          0          0
T  7948(131) 28.26  27.02          0          0          0          0          0          0          0
T  7949(131) 29.31  28.07          0          0          0          0          0          0          0
T  7950(131) 30.36  29.12          0          0          0          0          0          0          0
T  7951(131) 31.41  30.17          0          0          0          0          0          0          0
T  7952(131) 32.46  31.23          0          0          0          0          0          0          0
T  7953(131) 33.51  32.28          0          0          0          0          0          0          0
T  7954(131) 34.56  33.33          0          0          0          0          0          0          0
T  7955(131) 35.62  34.38          0          0          0          0          0          0          0
T  7956(131) 36.67  35.43          0          0          0          0          0          0          0
T  7957(131) 37.72  36.48          0          0          0          0          0          0          0
T  7958(131) 38.77  37.53          0          0          0          0          0          0          0
T  7959(131) 39.82  38.58          0          0          0          0          0          0          0
T  7960(131) 40.87  39.64          0          0          0          0          0          0          0
             41.50        MODEL HAS LEFT CENTERLINE
T  7961(131) 41.92  40.69          0          0          0          0          0          0          0
T  7962(131) 42.97  41.74          0          0          0          0          0          0          0
T  7963(131) 44.00  42.76          0          0          0          0          0          0          0
        ERROR IN POWRF  BASE<0    A = 6001000323264723 CALL FROM 72651
```

8/21/74

NASA-RI STS OM25A

V418-83A

AEDC(ARO,INC.) ARNOLD AFS, TENNESSEE
VON KARMAN GAS DYNAMICS FACILITY
50 INCH HYPERSONIC TUNNEL B

GROUP	CONFIG	MODEL	MACH NO	PO(PSIA)	TO(DEG R)	ALPHA-MODEL	ALPHA-SECTOR	ALPHA-PREBEND	ROLL-MODEL	YAW
33	2	40 PERCENT	7.90	112.4	1265	30.03	-.03	30.00	180.00	-.00

T-INF (DEG R)	P-INF (PSIA)	Q-INF (PSIA)	V-INF (FT/SEC)	RHO-INF (SLUGS/FT3)	MU-INF (LB-SEC/FT2)	RE/FT (FT-1)	HREF (R= .0175FT)	STREF (R= .0175FT)
93.8	.012	.546	3749	1.117E-05	7.551E-08	5.546E 05	1.805E-02	5.439E-02

CAMERA IOP(T)	ROLL NO	PAINT TEMP (DEG F)	INITIAL TEMP (DEG F)	SQUARE ROOT (RHOXCXK)	TBAR(TO)	BETA(TO)
	291	131	0	0	0	0

	PIC NO	TIME	DELTIME	H(TO)	H(TO)/HREF	H(.9TO)	H(.9TO)/HREF	H(.867TO)	H(.867TO)/HREF	ST(TO)
T	7964(131)	.03		MODEL HAS NOT REACHED CENTERLINE						
T	7965(131)	1.00		MODEL HAS NOT REACHED CENTERLINE						
T	7966(131)	2.03		MODEL HAS NOT REACHED CENTERLINE						
INJECT TIME =		2.30								
T	7967(131)	3.08	1.79	0	0	0	0	0	0	0
T	7968(131)	4.13	2.84	0	0	0	0	0	0	0
T	7969(131)	5.18	3.89	0	0	0	0	0	0	0
T	7970(131)	6.23	4.94	0	0	0	0	0	0	0
T	7971(131)	7.28	5.99	0	0	0	0	0	0	0
T	7972(131)	8.33	7.04	0	0	0	0	0	0	0
T	7973(131)	9.36	8.07	0	0	0	0	0	0	0
T	7974(131)	10.41	9.12	0	0	0	0	0	0	0
T	7975(131)	11.46	10.17	0	0	0	0	0	0	0
T	7976(131)	12.51	11.22	0	0	0	0	0	0	0
T	7977(131)	13.57	12.27	0	0	0	0	0	0	0
T	7978(131)	14.62	13.32	0	0	0	0	0	0	0
T	7979(131)	15.67	14.38	0	0	0	0	0	0	0
T	7980(131)	16.72	15.43	0	0	0	0	0	0	0
T	7981(131)	17.77	16.48	0	0	0	0	0	0	0
T	7982(131)	18.82	17.53	0	0	0	0	0	0	0
T	7983(131)	19.87	18.58	0	0	0	0	0	0	0
T	7984(131)	20.92	19.63	0	0	0	0	0	0	0
T	7985(131)	21.98	20.68	0	0	0	0	0	0	0
T	7986(131)	23.03	21.73	0	0	0	0	0	0	0
T	7987(131)	24.08	22.78	0	0	0	0	0	0	0
T	7988(131)	25.10	23.81	0	0	0	0	0	0	0

****
* UNCLASSIFIED *
****

8/21/74

NASA-RI STS OH25A

V41B-83A

AEDC(ARO,INC.) ARNOLD AFS, TENNESSEE
VON KARMAN GAS DYNAMICS FACILITY
50 INCH HYPERSONIC TUNNEL B

GROUP	CONFIG	MODEL	MACH NO	PO(PSIA)	TO(DEG R)	ALPHA-MODEL	ALPHA-SECTOR	ALPHA-PREBEND	ROLL-MODEL	YAW
33	2	40 PERCENT	7.90	112.1	1265	30.03	-.03	30.00	180.00	-.00

T-INF (DEG R)	P-INF (PSIA)	Q-INF (PSIA)	V-INF (FT/SEC)	RHO-INF (SLUGS/FT3)	MU-INF (LB-SEC/FT2)	RE/FT (FT-1)	HREF (R= .0175FT)	STREF (R= .0175FT)
93.8	.012	.544	3749	1.114E-05	7.551E-08	5.531E 05	1.803E-02	5.446E-02

CAMERA TOP(T)	ROLL NO	PAINT TEMP (DEG F)	INITIAL TEMP (DEG F)	SQUARE ROOT (RHOXCXK)	TBAR(TO)	BETA(TO)
	291	131	0	0	0	0

	PIC NO	TIME	DELTIME	H(TO)	H(TO)/HREF	H(.9TO)	H(.9TO)/HREF	H(.867TO)	H(.867TO)/HREF	ST(TO)
T	7989(131)	26.16	24.86	0	0	0	0	0	0	0
T	7990(131)	27.21	25.91	0	0	0	0	0	0	0
T	7991(131)	28.26	26.96	0	0	0	0	0	0	0
T	7992(131)	29.31	28.02	0	0	0	0	0	0	0
T	7993(131)	30.36	29.07	0	0	0	0	0	0	0
T	7994(131)	31.41	30.12	0	0	0	0	0	0	0
T	7995(131)	32.46	31.17	0	0	0	0	0	0	0
T	7996(131)	33.51	32.22	0	0	0	0	0	0	0
T	7997(131)	34.56	33.27	0	0	0	0	0	0	0
T	7998(131)	35.62	34.32	0	0	0	0	0	0	0
T	7999(131)	36.67	35.37	0	0	0	0	0	0	0
T	8000(131)	37.72	36.43	0	0	0	0	0	0	0
T	8001(131)	38.77	37.48	0	0	0	0	0	0	0
T	8002(131)	39.82	38.53	0	0	0	0	0	0	0
T	8003(131)	40.87	39.58	0	0	0	0	0	0	0
T	8004(131)	41.92	40.63	0	0	0	0	0	0	0
		42.60		MODEL HAS LEFT CENTERLINE						
T	8005(131)	42.97	41.68	0	0	0	0	0	0	0
T	8006(131)	44.03	42.73	0	0	0	0	0	0	0
T	8007(131)	45.08	43.78	0	0	0	0	0	0	0

ERROR IN FOWRF BASE<0 A = 6001241612743472 CALL FROM 72651

8/21/74

NASA-RI STS OM25A

V418-83A

AEDC(ARO,INC.) ARNOLD AFS, TENNESSEE
VON KARMAN GAS DYNAMICS FACILITY
50 INCH HYPERSONIC TUNNEL B

GROUP	CONFIG	MODEL	MACH NO	PO(PSIA)	TO(DEG R)	ALPHA-MODEL	ALPHA-SECTOR	ALPHA-PREBEND	ROLL-MODEL	YAW
34	2	40 PERCENT	7.90	110.4	1264	40.00	-10.00	30.00	180.00	-.00

T-INF (DEG R)	P-INF (PSIA)	Q-INF (PSIA)	V-INF (FT/SEC)	RHO-INF (SLUGS/FT3)	MU-INF (LB-SEC/FT2)	RE/FT (FT-1)	HREF (R= .0175FT)	STREF (R= .0175FT)
93.7	.012	.536	3748	1.098E-05	7.546E-08	5.454E 05	1.789E-02	5.485E-02

CAMERA	ROLL NO	PAINT TEMP (DEG F)	INITIAL TEMP (DEG F)	SQUARE ROOT (RHOXCXK)	TBAR(TO)	BETA(TO)
TOP(T)	291	131	0	0	0	0

	PIC NO	TIME	DELTIME	H(TO)	H(TO)/HREF	H(.9TO)	H(.9TO)/HREF	H(.867TO)	H(.867TO)/HREF	ST(TO)
T	8008(131)	0		MODEL HAS NOT REACHED CENTERLINE						
T	8009(131)	1.00		MODEL HAS NOT REACHED CENTERLINE						
T	8010(131)	2.03		MODEL HAS NOT REACHED CENTERLINE						
INJECT TIME =		2.33								
T	8011(131)	3.05	1.75	0	0	0	0	0	0	0
T	8012(131)	4.10	2.80	0	0	0	0	0	0	0
T	8013(131)	5.16	3.85	0	0	0	0	0	0	0
T	8014(131)	6.21	4.90	0	0	0	0	0	0	0
T	8015(131)	7.26	5.95	0	0	0	0	0	0	0
T	8016(131)	8.31	7.00	0	0	0	0	0	0	0
T	8017(131)	9.36	8.05	0	0	0	0	0	0	0
T	8018(131)	10.41	9.11	0	0	0	0	0	0	0
T	8019(131)	11.46	10.16	0	0	0	0	0	0	0
T	8020(131)	12.51	11.21	0	0	0	0	0	0	0
T	8021(131)	13.57	12.26	0	0	0	0	0	0	0
T	8022(131)	14.62	13.31	0	0	0	0	0	0	0
T	8023(131)	15.67	14.36	0	0	0	0	0	0	0
T	8024(131)	16.69	15.39	0	0	0	0	0	0	0
T	8025(131)	17.75	16.44	0	0	0	0	0	0	0
T	8026(131)	18.80	17.49	0	0	0	0	0	0	0
T	8027(131)	19.85	18.54	0	0	0	0	0	0	0
T	8028(131)	20.90	19.59	0	0	0	0	0	0	0
T	8029(131)	21.98	20.67	0	0	0	0	0	0	0
T	8030(131)	23.00	21.69	0	0	0	0	0	0	0
T	8031(131)	24.05	22.75	0	0	0	0	0	0	0
T	8032(131)	25.10	23.80	0	0	0	0	0	0	0

****
* UNCLASSIFIED *
****

8/21/74

NASA-RI STS OH25A

V41R-83A

AEDC(ARO,INC.) ARNOLD AFS, TENNESSEE
VON KARMAN GAS DYNAMICS FACILITY
50 INCH HYPERSONIC TUNNEL H

GROUP	CONFIG	MODEL	MACH NO	PO(PSIA)	TO(DEG R)	ALPHA-MODEL	ALPHA-SECTOR	ALPHA-PREBEND	ROLL-MODEL	YAW
34	2	40 PERCENT	7.90	111.3	1264	40.00	-10.00	30.00	180.00	-.00

T-INF (DEG R)	P-INF (PSIA)	Q-INF (PSIA)	V-INF (FT/SEC)	RHO-INF (SLUGS/FT3)	MU-INF (LB-SEC/FT2)	RE/FT (FT-1)	HREF (H= .0175FT)	STREF (H= .0175FT)
93.7	.012	.540	3748	1.107E-05	7.546E-08	5.498E 05	1.796E-02	5.463E-02

CAMERA IOP(T)	ROLL NO	PAINT TEMP (DEG F)	INITIAL TEMP (DEG F)	SQUARE ROOT (RHOXCXK)	TRAR(TO)	BETA(TO)
	291	131	0	0	0	0

	PIC NO	TIME	DELTIME	H(TO)	H(TO)/HREF	H(.9TO)	H(.9TO)/HREF	H(.867TO)	H(.867TO)/HREF	ST(TO)
T	8033(131)	26.16	24.85	0	0	0	0	0	0	0
T	8034(131)	27.21	25.90	0	0	0	0	0	0	0
T	8035(131)	28.26	26.95	0	0	0	0	0	0	0
T	8036(131)	29.31	28.00	0	0	0	0	0	0	0
T	8037(131)	30.36	29.05	0	0	0	0	0	0	0
T	8038(131)	31.41	30.10	0	0	0	0	0	0	0
T	8039(131)	32.46	31.16	0	0	0	0	0	0	0
T	8040(131)	33.51	32.21	0	0	0	0	0	0	0
T	8041(131)	34.56	33.26	0	0	0	0	0	0	0
T	8042(131)	35.62	34.31	0	0	0	0	0	0	0
T	8043(131)	36.67	35.36	0	0	0	0	0	0	0
T	8044(131)	37.72	36.41	0	0	0	0	0	0	0
T	8045(131)	38.77	37.46	0	0	0	0	0	0	0
T	8046(131)	39.80	38.49	0	0	0	0	0	0	0
T	8047(131)	40.85	39.54	0	0	0	0	0	0	0
T	8048(131)	41.90	40.59	0	0	0	0	0	0	0
T	8049(131)	42.95	41.64	0	0	0	0	0	0	0
T	8050(131)	44.03	42.72	0	0	0	0	0	0	0
		44.80		MODEL HAS LEFT CENTERLINE						
T	8051(131)	45.05	43.75	0	0	0	0	0	0	0
T	8052(131)	46.10	44.80	0	0	0	0	0	0	0

ERROR IN POWRF BASE<0 A = 5777266767644733 CALL FROM 72651

****
* UNCLASSIFIED *
****

8/21/74

NASA-RI STS OH25A

AEDC(ARO,INC.) ARNOLD AFS, TENNESSEE
VON KARMAN GAS DYNAMICS FACILITY
50 INCH HYPERSONIC TUNNEL R

V418-83A

GROUP	CONFIG	MODEL	MACH NO	PO(PSIA)	TO(DEG R)	ALPHA-MODEL	ALPHA-SECTOR	ALPHA-PREBEND	ROLL-MODEL	YAW
35	6	L R.C.WING	7.90	112.5	1262	40.01	-.01	40.00	180.00	-.00

T-INF (DEG R)	P-INF (PSIA)	Q-INF (PSIA)	V-INF (FT/SEC)	RHO-INF (SLUGS/FT3)	MU-INF (LB-SEC/FT2)	RE/FT (FT-1)	HREF (R= .0175FT)	STREF (R= .0175FT)
93.6	.012	.546	3745	1.121E-05	7.534E-08	5.570E 05	1.805E-02	5.429E-02

CAMERA TOP(T)	ROLL NO	PAINT TEMP (DEG F)	INITIAL TEMP (DEG F)	SQUARE ROOT (RHOXCXK)	TBAR(TO)	BETA(TO)
	291	131	79	.0486	0	0

	PIC NO	TIME	DELTIME	H(TO)	H(TO)/HREF	H(.9TO)	H(.9TO)/HREF	H(.867TO)	H(.867TO)/HREF	ST(TO)
T	8063(131)	.03		MODEL HAS NOT REACHED CENTERLINE						
T	8064(131)	1.00		MODEL HAS NOT REACHED CENTERLINE						
T	8065(131)	2.03		MODEL HAS NOT REACHED CENTERLINE						
INJECT TIME =		2.30								
T	8066(131)	3.08	1.79	2.459E-03	.1361	3.018E-03	.1671	3.264E-03	.1807	7.322E-03
T	8067(131)	4.13	2.84	1.951E-03	.1080	2.395E-03	.1325	2.590E-03	.1433	5.804E-03
T	8068(131)	5.18	3.89	1.666E-03	.0922	2.046E-03	.1132	2.212E-03	.1224	4.957E-03
T	8069(131)	6.23	4.94	1.478E-03	.0818	1.815E-03	.1004	1.963E-03	.1086	4.399E-03
T	8070(131)	7.28	5.99	1.342E-03	.0743	1.648E-03	.0912	1.782E-03	.0986	3.994E-03
T	8071(131)	8.33	7.04	1.238E-03	.0685	1.520E-03	.0841	1.644E-03	.0910	3.684E-03
T	8072(131)	9.39	8.09	1.155E-03	.0639	1.418E-03	.0784	1.533E-03	.0848	3.433E-03
		9.44		MODEL HAS LEFT CENTERLINE						
T	8073(131)	10.44	9.14	1.087E-03	.0601	1.334E-03	.0738	1.442E-03	.0798	3.230E-03
T	8074(131)	11.49	10.20	1.029E-03	.0569	1.263E-03	.0699	1.366E-03	.0755	3.056E-03
T	8075(131)	12.54	11.25	9.797E-04	.0542	1.203E-03	.0665	1.301E-03	.0719	2.910E-03
T	8076(131)	13.59	12.30	9.309E-04	.0518	1.150E-03	.0636	1.244E-03	.0687	2.780E-03

ERROR IN POWRF BASE<0 A = 5777266754106213 CALL FROM 72651

ORIGINAL PAGE IS
OF POOR QUALITY

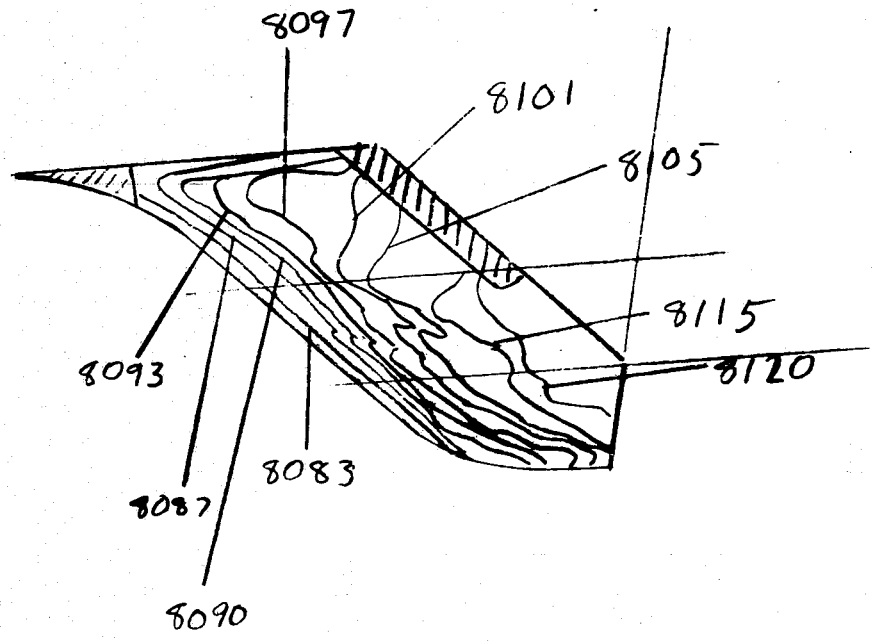

Group 36

0291 - 8083

8/21/74

NASA-RI STS OH25A

V418-83A

AEDC(ARO,INC.) ARNOLD AFS, TENNESSEE
VON KARMAN GAS DYNAMICS FACILITY
50 INCH HYPERSONIC TUNNEL B

GROUP	CONFIG	MODEL	MACH NO	PO(PSIA)	TO(DEG R)	ALPHA-MODEL	ALPHA-SECTOR	ALPHA-PREBEND	ROLL-MODEL	YAW
36	6	L F.C.WING	7.90	111.1	1261	40.01	-.01	40.00	180.00	-.00

T-INF (DEG R)	P-INF (PSIA)	Q-INF (PSIA)	V-INF (FT/SEC)	RHO-INF (SLUGS/FT3)	MU-INF (LB-SEC/FT2)	RE/FT (FT-1)	HREF (R= .0175FT)	STREF (R= .0175FT)
93.6	.012	.539	3744	1.107E-05	7.532E-08	5.503E 05	1.794E-02	5.462E-02

CAMERA TOP(T)	ROLL NO	PAINT TEMP (DEG F)	INITIAL TEMP (DEG F)	SQUARE ROOT (RHOXCXK)	TBAR(TO)	BETA(TO)
	291	225	81	.0528	0	0

	PIC NO	TIME	DELTIME	H(TO)	H(TO)/HREF	H(.9TO)	H(.9TO)/HREF	H(.867TO)	H(.867TO)/HREF	ST(TO)
T	8077(225)	.03		MODEL HAS NOT REACHED CENTERLINE						
T	8078(225)	1.00		MODEL HAS NOT REACHED CENTERLINE						
T	8079(225)	2.03		MODEL HAS NOT REACHED CENTERLINE						
INJECT TIME =		2.28								
T	8080(225)	3.08	1.80	8.315E-03	.4627	1.052E-02	.5856	1.154E-02	.6420	2.488E-02
T	8081(225)	4.13	2.85	6.607E-03	.3676	8.362E-03	.4653	9.167E-03	.5101	1.976E-02
T	8082(225)	5.18	3.90	5.647E-03	.3141	7.148E-03	.3975	7.836E-03	.4358	1.688E-02
T	8083(225)	6.23	4.95	5.012E-03	.2786	6.344E-03	.3527	6.955E-03	.3866	1.497E-02
T	8084(225)	7.28	6.00	4.553E-03	.2531	5.762E-03	.3203	6.317E-03	.3512	1.359E-02
T	8085(225)	8.33	7.06	4.200E-03	.2335	5.316E-03	.2955	5.827E-03	.3240	1.254E-02
T	8086(225)	9.39	8.11	3.918E-03	.2178	4.959E-03	.2757	5.436E-03	.3022	1.170E-02
T	8087(225)	10.44	9.16	3.686E-03	.2047	4.666E-03	.2591	5.115E-03	.2841	1.099E-02
T	8088(225)	11.49	10.21	3.491E-03	.1940	4.419E-03	.2456	4.844E-03	.2692	1.042E-02
T	8089(225)	12.54	11.26	3.324E-03	.1846	4.208E-03	.2337	4.613E-03	.2562	9.910E-03
T	8090(225)	13.59	12.31	3.179E-03	.1765	4.024E-03	.2234	4.412E-03	.2449	9.469E-03
T	8091(225)	14.64	13.36	3.052E-03	.1694	3.863E-03	.2144	4.234E-03	.2351	9.089E-03
T	8092(225)	15.69	14.41	2.938E-03	.1631	3.719E-03	.2064	4.077E-03	.2263	8.743E-03
T	8093(225)	16.74	15.47	2.837E-03	.1575	3.590E-03	.1993	3.936E-03	.2185	8.448E-03
T	8094(225)	17.80	16.52	2.745E-03	.1523	3.474E-03	.1928	3.809E-03	.2114	8.168E-03
T	8095(225)	18.85	17.57	2.662E-03	.1477	3.369E-03	.1869	3.693E-03	.2049	7.920E-03
T	8096(225)	19.90	18.62	2.585E-03	.1434	3.272E-03	.1815	3.587E-03	.1990	7.686E-03
T	8097(225)	20.95	19.67	2.515E-03	.1395	3.184E-03	.1766	3.490E-03	.1936	7.478E-03
T	8098(225)	22.00	20.72	2.451E-03	.1359	3.102E-03	.1721	3.400E-03	.1886	7.286E-03
T	8099(225)	23.05	21.77	2.391E-03	.1326	3.026E-03	.1678	3.317E-03	.1839	7.102E-03
T	8100(225)	24.10	22.82	2.335E-03	.1294	2.956E-03	.1638	3.240E-03	.1796	6.930E-03
T	8101(225)	25.15	23.88	2.283E-03	.1265	2.890E-03	.1601	3.168E-03	.1756	6.776E-03

****
* UNCLASSIFIED *
****

8/21/74

NASA-RI STS OH25A

AEDC(ARO,INC.) ARNOLD AFS, TENNESSEE
VON KARMAN GAS DYNAMICS FACILITY
50 INCH HYPERSONIC TUNNEL B

V41B-83A

GROUP	CONFIG	MODEL	MACH.NO	PO(PSIA)	TO(DEG R)	ALPHA-MODEL	ALPHA-SECTOR	ALPHA-PREREND	ROLL-MODEL	YAW
36	6	L R.C.WING	7.90	112.4	1261	40.01	-.01	40.00	180.00	-.00

T-INF (DEG R)	P-INF (PSIA)	Q-INF (PSIA)	V-INF (FT/SEC)	RHO-INF (SLUGS/FT3)	MU-INF (LB-SEC/FT2)	RE/FT (FT-1)	HREF (R= .0175FT)	STREF (R= .0175FT)
93.6	.012	.546	3744	1.120E-05	7.532E-08	5.567E 05	1.804E-02	5.430E-02

CAMERA	ROLL NO	PAINT TEMP (DEG F)	INITIAL TEMP (DEG F)	SQUARE ROOT (RHOXCAK)	TBAR(TO)	BETA(TO)
TOP(T)	291	225	81	.0528	2.000E-01	2.1129E-01

	PIC NO	TIME	DELTIME	H(TO)	H(TO)/HREF	H(.9TO)	H(.9TO)/HREF	H(.867TO)	H(.867TO)/HREF	ST(TO)
T	8102(225)	26.21	24.93	2.234E-03	.1238	2.828E-03	.1567	3.100E-03	.1718	6.631E-03
T	8103(225)	27.26	25.98	2.189E-03	.1212	2.770E-03	.1535	3.037E-03	.1682	6.490E-03
T	8104(225)	28.31	27.03	2.146E-03	.1189	2.716E-03	.1504	2.977E-03	.1649	6.362E-03
T	8105(225)	29.36	28.08	2.105E-03	.1166	2.665E-03	.1476	2.921E-03	.1618	6.242E-03
T	8106(225)	30.41	29.13	2.067E-03	.1144	2.616E-03	.1448	2.868E-03	.1588	6.123E-03
T	8107(225)	31.46	30.18	2.031E-03	.1124	2.570E-03	.1423	2.818E-03	.1560	6.016E-03
T	8108(225)	32.51	31.23	1.996E-03	.1105	2.526E-03	.1399	2.770E-03	.1534	5.914E-03
T	8109(225)	33.56	32.28	1.963E-03	.1087	2.485E-03	.1375	2.724E-03	.1508	5.811E-03
T	8110(225)	34.61	33.34	1.932E-03	.1069	2.446E-03	.1353	2.681E-03	.1483	5.714E-03
T	8111(225)	35.67	34.39	1.902E-03	.1052	2.408E-03	.1332	2.640E-03	.1460	5.626E-03
T	8112(225)	36.69	35.41	1.875E-03	.1037	2.373E-03	.1313	2.601E-03	.1439	5.544E-03
T	8113(225)	37.74	36.46	1.847E-03	.1022	2.338E-03	.1294	2.563E-03	.1418	5.464E-03
T	8114(225)	38.79	37.52	1.821E-03	.1008	2.305E-03	.1275	2.527E-03	.1398	5.387E-03
T	8115(225)	39.85	38.57	1.796E-03	.0993	2.274E-03	.1257	2.493E-03	.1378	5.308E-03
T	8116(225)	40.90	39.62	1.772E-03	.0980	2.243E-03	.1240	2.459E-03	.1360	5.237E-03
T	8117(225)	41.95	40.67	1.749E-03	.0967	2.214E-03	.1224	2.427E-03	.1342	5.169E-03
T	8118(225)	43.00	41.72	1.727E-03	.0955	2.186E-03	.1209	2.396E-03	.1325	5.103E-03
T	8119(225)	44.05	42.77	1.706E-03	.0943	2.159E-03	.1194	2.367E-03	.1309	5.040E-03
		44.78		MODEL HAS LEFT CENTERLINE						
T	8120(225)	45.10	43.82	1.685E-03	.0931	2.133E-03	.1179	2.338E-03	.1292	4.975E-03
T	8121(225)	46.15	44.87	1.665E-03	.0920	2.108E-03	.1164	2.311E-03	.1277	4.912E-03
T	8122(225)	47.20	45.93	1.646E-03	.0910	2.084E-03	.1152	2.284E-03	.1263	4.864E-03
T	8123(225)	48.26	46.98	1.628E-03	.0899	2.060E-03	.1138	2.258E-03	.1248	4.801E-03

ERROR IN POWRF BASE<0 A = 5777167657353043 CALL FROM 7265)

GROUP 37

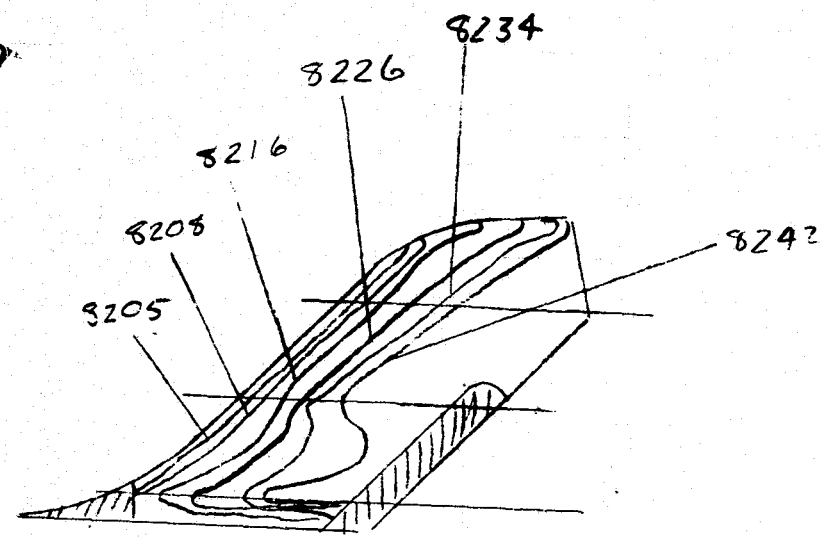

GROUP 37

0318-8205

ORIGINAL PAGE IS
OF POOR QUALITY

8/21/74

NASA-RI STS OH25A

V418-83A

AEDC(ARO,INC.) ARNOLD AFS, TENNESSEE
VON KARMAN GAS DYNAMICS FACILITY
50 INCH HYPERSONIC TUNNEL B

GROUP	CONFIG	MODEL	MACH NO	PO(PSIA)	TO(DEG R)	ALPHA-MODEL	ALPHA-SECTOR	ALPHA-PREHEND	ROLL-MODEL	YAW
37	6	L R.C.WING	7.90	112.2	1257	30.01	9.99	40.00	180.00	-.00

T-INF (DEG R)	P-INF (PSIA)	Q-INF (PSIA)	V-INF (FT/SEC)	RHO-INF (SLUGS/FT3)	MU-INF (LB-SEC/FT2)	RE/FT (FT-1)	HREF (R= .0175FT)	STREF (R= .0175FT)
93.2	.012	.545	3737	1.122E-05	7.504E-08	5.589E 05	1.802E-02	5.423E-02

CAMERA TOP(T)	ROLL NO	PAINT TEMP (DEG F)	INITIAL TEMP (DEG F)	SQUARE ROOT (RHOXCXK)	TBAR(TO)	BETA(TO)
	318	225	82	.0528	0	0

	PIC NO	TIME	DELTIME	H(TO)	H(TO)/HREF	H(.9TO)	H(.9TO)/HREF	H(.867TO)	H(.867TO)/HREF	ST(TO)
T	8200(225)	0		MODEL HAS NOT REACHED CENTERLINE						
T	8201(225)	.58		MODEL HAS NOT REACHED CENTERLINE						
T	8202(225)	2.00		MODEL HAS NOT REACHED CENTERLINE						
INJECT TIME =		2.33								
T	8203(225)	3.03	1.72	8.507E-03	.4721	1.078E-02	.5983	1.182E-02	.6563	2.525E-02
T	8204(225)	4.08	2.77	6.703E-03	.3720	8.494E-03	.4714	9.317E-03	.5172	1.990E-02
T	8205(225)	5.13	3.82	5.708E-03	.3168	7.233E-03	.4014	7.934E-03	.4404	1.694E-02
T	8206(225)	6.18	4.88	5.055E-03	.2805	6.406E-03	.3554	7.027E-03	.3898	1.499E-02
T	8207(225)	7.21	5.90	4.595E-03	.2549	5.822E-03	.3230	6.387E-03	.3543	1.363E-02
T	8208(225)	8.26	6.95	4.233E-03	.2348	5.364E-03	.2976	5.884E-03	.3264	1.255E-02
T	8209(225)	9.31	8.00	3.945E-03	.2189	4.999E-03	.2774	5.484E-03	.3043	1.170E-02
T	8210(225)	10.34	9.03	3.714E-03	.2060	4.707E-03	.2610	5.163E-03	.2863	1.101E-02
T	8211(225)	11.39	10.08	3.515E-03	.1949	4.455E-03	.2470	4.887E-03	.2710	1.042E-02
T	8212(225)	12.44	11.13	3.345E-03	.1855	4.239E-03	.2351	4.650E-03	.2579	9.912E-03
T	8213(225)	13.47	12.16	3.201E-03	.1774	4.056E-03	.2248	4.450E-03	.2466	9.477E-03
T	8214(225)	14.52	13.21	3.071E-03	.1702	3.892E-03	.2157	4.269E-03	.2366	9.092E-03
T	8215(225)	15.57	14.26	2.956E-03	.1638	3.745E-03	.2076	4.109E-03	.2277	8.750E-03
T	8216(225)	16.62	15.31	2.852E-03	.1582	3.615E-03	.2004	3.965E-03	.2199	8.452E-03
T	8217(225)	17.65	16.34	2.761E-03	.1531	3.499E-03	.1940	3.839E-03	.2129	8.183E-03
T	8218(225)	18.70	17.39	2.677E-03	.1484	3.392E-03	.1880	3.721E-03	.2062	7.925E-03
T	8219(225)	19.75	18.44	2.599E-03	.1441	3.294E-03	.1826	3.613E-03	.2003	7.695E-03
T	8220(225)	20.80	19.49	2.528E-03	.1401	3.204E-03	.1776	3.514E-03	.1948	7.485E-03
T	8221(225)	21.85	20.54	2.463E-03	.1365	3.121E-03	.1730	3.423E-03	.1897	7.291E-03
T	8222(225)	22.88	21.57	2.403E-03	.1332	3.045E-03	.1687	3.341E-03	.1851	7.109E-03
T	8223(225)	23.93	22.62	2.347E-03	.1301	2.974E-03	.1648	3.262E-03	.1808	6.948E-03
T	8224(225)	24.98	23.67	2.294E-03	.1272	2.907E-03	.1611	3.189E-03	.1768	6.792E-03

****
* UNCLASSIFIED *
****

8/21/74

NASA-RI STS OH25A

V418-83A

AEDC(ARO,INC.) ARNOLD AFS, TENNESSEE
VON KARMAN GAS DYNAMICS FACILITY
50 INCH HYPERSONIC TUNNEL B

GROUP	CONFIG	MODEL	MACH NO	PO(PSIA)	TO(DEG R)	ALPHA-MODEL	ALPHA-SECTOR	ALPHA-PREBEND	ROLL-MODEL	YAW
37	6	L R.C.WING	7.90	112.5	1257	30.01	9.99	40.00	180.00	-.00

T-INF (DEG R)	P-INF (PSIA)	Q-INF (PSIA)	V-INF (FT/SEC)	RHO-INF (SLUGS/FT3)	MU-INF (LB-SEC/FT2)	RE/FT (FT-1)	HREF (R= .0175FT)	STREF (R= .0175FT)
93.2	.012	.546	3737	1.125E-05	7.505E-08	5.602E 05	1.804E-02	5.416E-02

CAMERA	ROLL NO	PAINT TEMP (DEG F)	INITIAL TEMP (DEG F)	SQUARE ROOT (RHOXCXK)	TBAR(TO)	BETA(TO)
TOP(T)	318	225	82	.0528	2.001E-01	2.1140E-01

	PIC NO	TIME	DELTIME	H(TO)	H(TO)/HREF	H(.9TO)	H(.9TO)/HREF	H(.867TO)	H(.867TO)/HREF	ST(TO)
T	8225(225)	26.00	24.70	2.246E-03	.1244	2.846E-03	.1577	3.122E-03	.1730	6.644E-03
T	8226(225)	27.06	25.75	2.200E-03	.1219	2.787E-03	.1544	3.058E-03	.1694	6.506E-03
T	8227(225)	28.11	26.80	2.156E-03	.1195	2.732E-03	.1514	2.997E-03	.1660	6.377E-03
T	8228(225)	29.16	27.85	2.115E-03	.1172	2.680E-03	.1486	2.940E-03	.1630	6.261E-03
T	8229(225)	30.18	28.88	2.077E-03	.1151	2.632E-03	.1458	2.887E-03	.1600	6.144E-03
T	8230(225)	31.24	29.93	2.040E-03	.1130	2.585E-03	.1432	2.836E-03	.1571	6.035E-03
T	8231(225)	32.29	30.98	2.005E-03	.1111	2.541E-03	.1407	2.788E-03	.1544	5.926E-03
T	8232(225)	33.34	32.03	1.972E-03	.1092	2.499E-03	.1384	2.741E-03	.1518	5.828E-03
T	8233(225)	34.36	33.06	1.941E-03	.1076	2.460E-03	.1363	2.699E-03	.1495	5.743E-03
T	8234(225)	35.44	34.13	1.911E-03	.1058	2.421E-03	.1341	2.656E-03	.1471	5.651E-03
T	8235(225)	36.47	35.16	1.882E-03	.1043	2.385E-03	.1322	2.617E-03	.1450	5.568E-03
T	8236(225)	37.52	36.21	1.855E-03	.1028	2.350E-03	.1302	2.578E-03	.1429	5.487E-03
T	8237(225)	38.54	37.24	1.829E-03	.1013	2.318E-03	.1284	2.543E-03	.1408	5.406E-03
T	8238(225)	39.62	38.31	1.803E-03	.0999	2.285E-03	.1265	2.507E-03	.1388	5.329E-03
T	8239(225)	40.65	39.34	1.780E-03	.0986	2.255E-03	.1249	2.474E-03	.1371	5.264E-03
T	8240(225)	41.70	40.39	1.756E-03	.0973	2.225E-03	.1233	2.441E-03	.1353	5.195E-03
T	8241(225)	42.75	41.44	1.734E-03	.0960	2.197E-03	.1217	2.410E-03	.1335	5.124E-03
T	8242(225)	43.78	42.47	1.713E-03	.0948	2.170E-03	.1202	2.381E-03	.1318	5.063E-03
		43.88		MODEL HAS LEFT CENTERLINE						
T	8243(225)	44.83	43.52	1.692E-03	.0937	2.144E-03	.1187	2.352E-03	.1302	5.000E-03
T	8244(225)	45.88	44.57	1.672E-03	.0927	2.119E-03	.1174	2.324E-03	.1288	4.949E-03

ERROR IN POWRF BASE<0 A = 5777167645517007 CALL FROM 72651

8/21/74

NASA-RI STS OH25A

V41B-83A

AEDC(ARO,INC.) ARNOLD AFS, TENNESSEE
VON KARMAN GAS DYNAMICS FACILITY
50 INCH HYPERSONIC TUNNEL B

GROUP	CONFIG	MODEL	MACH NO	PO(PSIA)	TO(DEG R)	ALPHA-MODEL	ALPHA-SECTOR	ALPHA-PREBEND	ROLL-MODEL	YAW
38	6	L F.C.#ING	7.90	113.4	1257	30.01	9.99	40.00	180.00	-.00

T-INF (DEG R)	P-INF (PSIA)	Q-INF (PSIA)	V-INF (FT/SEC)	RHO-INF (SLUGS/FT3)	MU-INF (LB-SEC/FT2)	RE/FT (FT-1)	HREF (R= .0175FT)	STREF (R= .0175FT)
93.2	.013	.550	3738	1.134E-05	7.507E-08	5.645E 05	1.811E-02	5.395E-02

CAMERA TOP(T)	ROLL NO	PAINT TEMP (DEG F)	INITIAL TEMP (DEG F)	SQUARE ROOT (RHOXCXK)	TBAR(TO)	BETA(TO)
	318	225	0	0	0	0

	PIC NO	TIME	DELTIME	H(TO)	H(TO)/HREF	H(.9TO)	H(.9TO)/HREF	H(.867TO)	H(.867TO)/HREF	ST(TO)
T	8252(225)	.03		MODEL HAS NOT REACHED CENTERLINE						
T	8253(225)	.58		MODEL HAS NOT REACHED CENTERLINE						
T	8254(225)	2.00		MODEL HAS NOT REACHED CENTERLINE						
INJECT TIME =		2.38								
T	8255(225)	3.05	1.72	0	0	0	0	0	0	0
T	8256(225)	4.08	2.74	0	0	0	0	0	0	0
T	8257(225)	5.13	3.80	0	0	0	0	0	0	0
T	8258(225)	6.16	4.82	0	0	0	0	0	0	0
T	8259(225)	7.21	5.87	0	0	0	0	0	0	0
T	8260(225)	8.26	6.92	0	0	0	0	0	0	0
T	8261(225)	9.29	7.95	0	0	0	0	0	0	0
T	8262(225)	10.34	9.00	0	0	0	0	0	0	0
T	8263(225)	11.39	10.05	0	0	0	0	0	0	0
T	8264(225)	12.41	11.08	0	0	0	0	0	0	0
T	8265(225)	13.47	12.13	0	0	0	0	0	0	0
T	8266(225)	14.52	13.18	0	0	0	0	0	0	0
T	8267(225)	15.54	14.21	0	0	0	0	0	0	0
T	8268(225)	16.59	15.26	0	0	0	0	0	0	0
T	8269(225)	17.65	16.31	0	0	0	0	0	0	0
T	8270(225)	18.67	17.34	0	0	0	0	0	0	0
T	8271(225)	19.72	18.39	0	0	0	0	0	0	0
T	8272(225)	20.77	19.44	0	0	0	0	0	0	0
T	8273(225)	21.83	20.49	0	0	0	0	0	0	0
T	8274(225)	22.85	21.52	0	0	0	0	0	0	0
T	8275(225)	23.90	22.57	0	0	0	0	0	0	0
T	8276(225)	24.95	23.62	0	0	0	0	0	0	0

****
* UNCLASSIFIED *
****

8/21/74

NASA-RI STS OH25A

AEDC(ARO,INC.) ARNOLD AFS, TENNESSEE
VON KARMAN GAS DYNAMICS FACILITY
50 INCH HYPERSONIC TUNNEL A

V41R-83A

GROUP	CONFIG	MODEL	MACH NO	PO(PSIA)	TO(DEG R)	ALPHA-MODEL	ALPHA-SECTOR	ALPHA-PREBEND	ROLL-MODEL	YAW
38	6	L R.C.WING	7.90	113.5	1257	30.01	9.99	40.00	180.00	-.00

T-INF (DEG R)	P-INF (PSIA)	Q-INF (PSIA)	V-INF (FT/SEC)	RHO-INF (SLUGS/FT3)	MU-INF (LB-SEC/FT2)	RE/FT (FT-1)	HREF (R= .0175FT)	STREF (R= .0175FT)
93.2	.013	.551	3738	1.135E-05	7.507E-08	5.650E 05	1.812E-02	5.393E-02

CAMERA	ROLL NO	PAINT TEMP (DEG F)	INITIAL TEMP (DEG F)	SQUARE ROOT (RHOXCXK)	TBAR(TO)	BETA(TO)
TOP(T)	318	225	0	0	0	0

	PIC NO	TIME	DELTIME	H(TO)	H(TO)/HREF	H(.9TO)	H(.9TO)/HREF	H(.867TO)	H(.867TO)/HREF	ST(TO)
T	8277(225)	25.98	24.65	0	0	0	0	0	0	0
T	8278(225)	27.03	25.70	0	0	0	0	0	0	0
T	8279(225)	28.08	26.75	0	0	0	0	0	0	0
T	8280(225)	29.13	27.80	0	0	0	0	0	0	0
T	8281(225)	30.16	28.82	0	0	0	0	0	0	0
T	8282(225)	31.21	29.88	0	0	0	0	0	0	0
T	8283(225)	32.26	30.93	0	0	0	0	0	0	0
T	8284(225)	33.29	31.95	0	0	0	0	0	0	0
T	8285(225)	34.34	33.00	0	0	0	0	0	0	0
T	8286(225)	35.39	34.06	0	0	0	0	0	0	0
T	8287(225)	36.44	35.11	0	0	0	0	0	0	0
T	8288(225)	37.47	36.13	0	0	0	0	0	0	0
T	8289(225)	38.52	37.18	0	0	0	0	0	0	0
T	8290(225)	39.57	38.24	0	0	0	0	0	0	0
T	8291(225)	40.60	39.26	0	0	0	0	0	0	0
T	8292(225)	41.65	40.31	0	0	0	0	0	0	0
T	8293(225)	42.70	41.36	0	0	0	0	0	0	0
T	8294(225)	43.75	42.42	0	0	0	0	0	0	0
T	8295(225)	44.78	43.44	0	0	0	0	0	0	0
T	8296(225)	45.83	44.49	0	0	0	0	0	0	0
		46.20		MODEL HAS LEFT CENTERLINE						
T	8297(225)	46.88	45.54	0	0	0	0	0	0	0
T	8298(225)	47.93	46.60	0	0	0	0	0	0	0
T	8299(225)	48.96	47.62	0	0	0	0	0	0	0

ERROR IN POWRF BASE<0 A = 5777266767644733 CALL FROM 72651

8/21/74

NASA-RI STS OH25A

V418-A3A

AEDC(ARO,INC.) ARNOLD AFS, TENNESSEE
VON KARMAN GAS DYNAMICS FACILITY
50 INCH HYPERSONIC TUNNEL R

GROUP	CONFIG	MODEL	MACH NO	PO(PSIA)	TO(DEG R)	ALPHA-MODEL	ALPHA-SECTOR	ALPHA-PREBEND	ROLL-MODEL	YAW
39	6	L R.C.WING	7.90	111.5	1257	40.01	-.01	40.00	180.00	-.00

T-INF (DEG R)	P-INF (PSIA)	Q-INF (PSIA)	V-INF (FT/SEC)	RHO-INF (SLUGS/FT3)	MU-INF (LB-SEC/FT2)	RE/FT (FT-1)	HREF (R= .0175FT)	STREF (R= .0175FT)
93.2	.012	.541	3738	1.115E-05	7.507E-08	5.551E 05	1.796E-02	5.441E-02

CAMERA TOP(T)	ROLL NO	PAINT TEMP (DEG F)	INITIAL TEMP (DEG F)	SQUARE ROOT (RHOXCXK)	TBAR(TO)	BETA(TO)
	318	225	0	0	0	0

	PIC NO	TIME	DELTIME	H(TO)	H(TO)/HREF	H(.9TO)	H(.9TO)/HREF	H(.867TO)	H(.867TO)/HREF	ST(TO)
T	8303(225)	.03		MODEL HAS NOT REACHED CENTERLINE						
T	8304(225)	1.00		MODEL HAS NOT REACHED CENTERLINE						
T	8305(225)	2.03		MODEL HAS NOT REACHED CENTERLINE						
INJECT TIME =		2.30								
T	8306(225)	3.05	1.76	0	0	0	0	0	0	0
T	8307(225)	4.10	2.81	0	0	0	0	0	0	0
T	8308(225)	5.13	3.84	0	0	0	0	0	0	0
T	8309(225)	6.18	4.89	0	0	0	0	0	0	0
T	8310(225)	7.23	5.94	0	0	0	0	0	0	0
T	8311(225)	8.28	6.99	0	0	0	0	0	0	0
T	8312(225)	9.31	8.02	0	0	0	0	0	0	0
T	8313(225)	10.36	9.07	0	0	0	0	0	0	0
T	8314(225)	11.41	10.12	0	0	0	0	0	0	0
T	8315(225)	12.46	11.17	0	0	0	0	0	0	0
T	8316(225)	13.49	12.20	0	0	0	0	0	0	0
T	8317(225)	14.54	13.25	0	0	0	0	0	0	0
T	8318(225)	15.59	14.30	0	0	0	0	0	0	0
T	8319(225)	16.62	15.33	0	0	0	0	0	0	0
T	8320(225)	17.67	16.38	0	0	0	0	0	0	0
T	8321(225)	18.72	17.43	0	0	0	0	0	0	0
T	8322(225)	19.77	18.48	0	0	0	0	0	0	0
T	8323(225)	20.77	19.48	0	0	0	0	0	0	0
T	8324(225)	21.83	20.53	0	0	0	0	0	0	0
T	8325(225)	22.88	21.58	0	0	0	0	0	0	0
T	8326(225)	23.93	22.63	0	0	0	0	0	0	0
T	8327(225)	25.00	23.71	0	0	0	0	0	0	0

****
* UNCLASSIFIED *
****
8/21/74

NASA-RI STS OH25A

V418-83A

AEDC(ARO,INC.) ARNOLD AFS, TENNESSEE
VON KARMAN GAS DYNAMICS FACILITY
50 INCH HYPERSONIC TUNNEL B

GROUP	CONFIG	MODEL	MACH NO	PO(PSIA)	TO(DEG R)	ALPHA-MODEL	ALPHA-SECTOR	ALPHA-PREBEND	ROLL-MODEL	YAW
39	6	L R.C.WING	7.90	112.3	1257	40.01	-.01	40.00	180.00	-.00

T-INF (DEG R)	P-INF (PSIA)	Q-INF (PSIA)	V-INF (FT/SEC)	RHO-INF (SLUGS/FT3)	MU-INF (LB-SEC/FT2)	RE/FT (FT-1)	HREF (R= .0175FT)	STREF (R= .0175FT)
93.2	.012	.545	3737	1.123E-05	7.504E-08	5.594E 05	1.802E-02	5.420E-02

CAMERA	ROLL NO	PAINT TEMP (DEG F)	INITIAL TEMP (DEG F)	SQUARE ROOT (RHOX(AK)	TBAR(TO)	BETA(TO)
TOP(T)	318	225	0	0	0	0

	PIC NO	TIME	DELTIME	H(TO)	H(TO)/HREF	H(.9TO)	H(.9TO)/HREF	H(.867TO)	H(.867TO)/HREF	ST(TO)
T	8328(225)	26.05	24.76	0	0	0	0	0	0	0
T	8329(225)	27.08	25.79	0	0	0	0	0	0	0
T	8330(225)	28.13	26.84	0	0	0	0	0	0	0
T	8331(225)	29.18	27.89	0	0	0	0	0	0	0
T	8332(225)	30.23	28.94	0	0	0	0	0	0	0
T	8333(225)	31.26	29.97	0	0	0	0	0	0	0
T	8334(225)	32.31	31.02	0	0	0	0	0	0	0
T	8335(225)	33.36	32.07	0	0	0	0	0	0	0
T	8336(225)	34.41	33.12	0	0	0	0	0	0	0
T	8337(225)	35.44	34.15	0	0	0	0	0	0	0
T	8338(225)	36.49	35.20	0	0	0	0	0	0	0
T	8339(225)	37.54	36.25	0	0	0	0	0	0	0
T	8340(225)	38.59	37.30	0	0	0	0	0	0	0
T	8341(225)	39.62	38.33	0	0	0	0	0	0	0
T	8342(225)	40.67	39.38	0	0	0	0	0	0	0
T	8343(225)	41.72	40.43	0	0	0	0	0	0	0
T	8344(225)	42.77	41.48	0	0	0	0	0	0	0
		43.42		MODEL HAS LEFT CENTERLINE						
T	8345(225)	43.80	42.51	0	0	0	0	0	0	0
T	8346(225)	44.85	43.56	0	0	0	0	0	0	0

ERROR IN POWRF BASE<0 A = 6001000355615341 CALL FROM 7265J

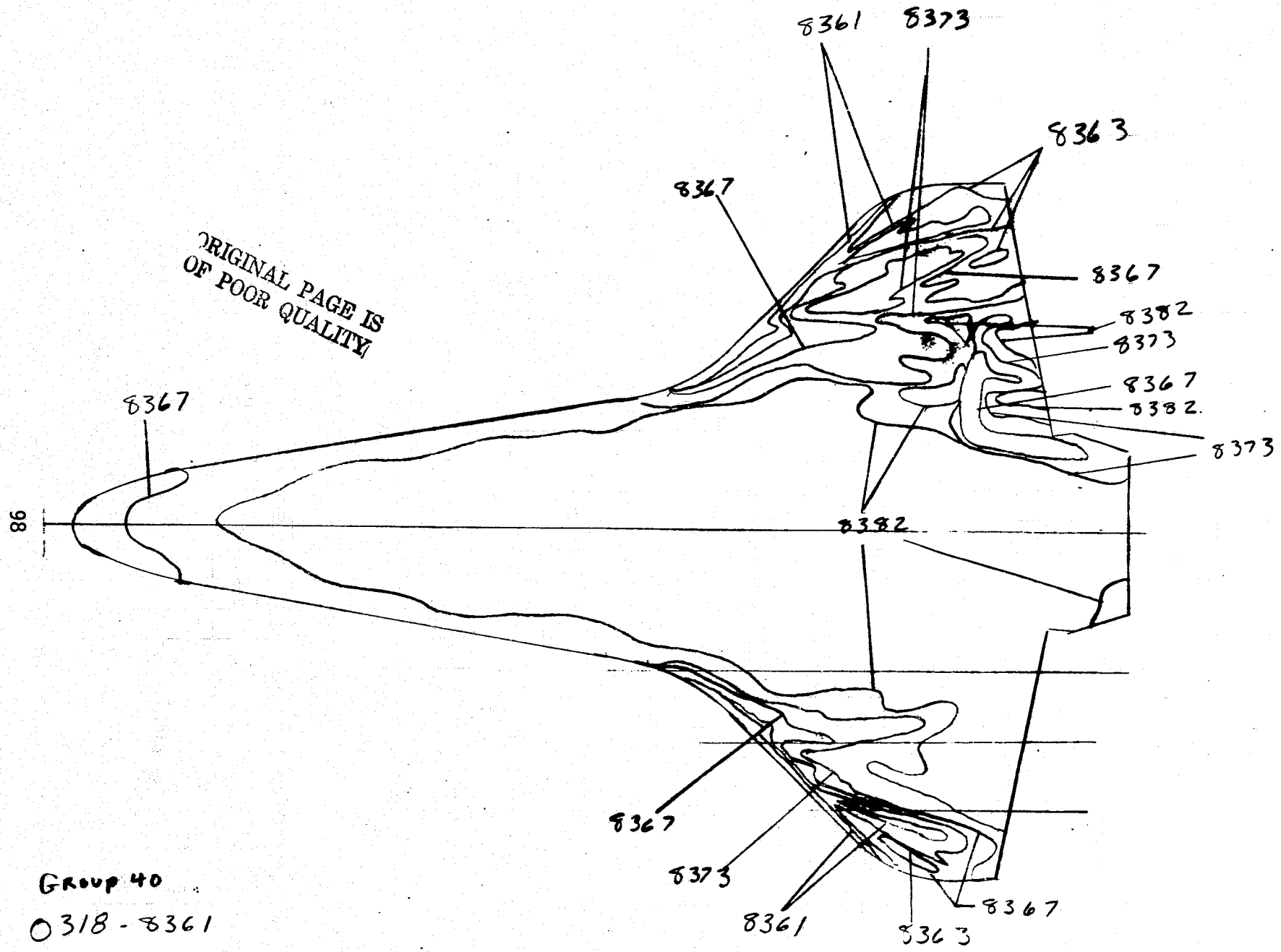

ORIGINAL PAGE IS
OF POOR QUALITY

GROUP 40

0318 - 8361

8/21/74

NASA-RI STS OH25A

AEDC(ARO,INC.) ARNOLD AFS, TENNESSEE
VON KARMAN GAS DYNAMICS FACILITY
50 INCH HYPERSONIC TUNNEL B

V41B-83A

GROUP	CONFIG	MODEL	MACH NO	PO(PSIA)	TO(DEG R)	ALPHA-MODEL	ALPHA-SECTOR	ALPHA-PREBEND	ROLL-MODEL	YAW
40	1	OREITER	7.98	432.8	1305	30.03	-.03	30.00	180.00	-.00

T-INF (DEG R)	P-INF (PSIA)	Q-INF (PSIA)	V-INF (FT/SEC)	RHO-INF (SLUGS/FT3)	MU-INF (LB-SEC/FT2)	RE/FT (FT-1)	HREF (R= .0175FT)	STREF (R= .0175FT)
95.0	.045	2.009	3812	3.978E-05	7.651E-08	1.982E 06	3.483E-02	2.891E-02

CAMERA TOP(T)	ROLL NO	PAINT TEMP (DEG F)	INITIAL TEMP (DEG F)	SQUARE ROOT (RHOXCAK)	TBAR(TO)	BETA(TO)
	318	300	83	.0544	0	0

	PIC NO	TIME	DELTIME	H(TO)	H(TO)/HREF	H(.910)	H(.9TO)/HREF	H(.867TO)	H(.867TO)/HREF	ST(TO)
T	8357(300)	.03		MODEL HAS NOT REACHED CENTERLINE						
T	8358(300)	.98		MODEL HAS NOT REACHED CENTERLINE						
T	8359(300)	2.00		MODEL HAS NOT REACHED CENTERLINE						
INJECT TIME =		2.30								
T	8360(300)	3.05	1.76	1.348E-02	.3869	1.741E-02	.4999	1.928E-02	.5535	1.099E-02
T	8361(300)	4.08	2.79	1.071E-02	.3075	1.384E-02	.3974	1.532E-02	.4399	8.733E-03
T	8362(300)	5.13	3.84	9.129E-03	.2621	1.179E-02	.3386	1.306E-02	.3749	7.441E-03
T	8363(300)	6.18	4.89	8.088E-03	.2321	1.045E-02	.2999	1.157E-02	.3320	6.588E-03
T	8364(300)	7.23	5.94	7.338E-03	.2106	9.481E-03	.2721	1.050E-02	.3012	5.978E-03
T	8365(300)	8.26	6.97	6.776E-03	.1945	8.755E-03	.2513	9.692E-03	.2782	5.522E-03
T	8366(300)	9.31	8.02	6.316E-03	.1813	8.161E-03	.2342	9.035E-03	.2593	5.147E-03
T	8367(300)	10.36	9.07	5.939E-03	.1704	7.673E-03	.2201	8.495E-03	.2437	4.834E-03
T	8368(300)	11.39	10.10	5.629E-03	.1615	7.273E-03	.2087	8.052E-03	.2311	4.585E-03
T	8369(300)	12.46	11.17	5.351E-03	.1535	6.914E-03	.1983	7.654E-03	.2196	4.355E-03
T	8370(300)	13.49	12.20	5.121E-03	.1470	6.616E-03	.1899	7.325E-03	.2103	4.174E-03
T	8371(300)	14.54	13.25	4.913E-03	.1410	6.348E-03	.1821	7.028E-03	.2017	4.000E-03
T	8372(300)	15.59	14.30	4.729E-03	.1357	6.111E-03	.1754	6.765E-03	.1941	3.851E-03
T	8373(300)	16.62	15.33	4.568E-03	.1311	5.903E-03	.1694	6.535E-03	.1875	3.720E-03
T	8374(300)	17.67	16.38	4.419E-03	.1268	5.710E-03	.1639	6.321E-03	.1814	3.598E-03
T	8375(300)	18.72	17.43	4.284E-03	.1229	5.535E-03	.1588	6.128E-03	.1758	3.488E-03
T	8376(300)	19.77	18.48	4.160E-03	.1194	5.375E-03	.1543	5.951E-03	.1708	3.387E-03
T	8377(300)	20.82	19.53	4.047E-03	.1161	5.229E-03	.1500	5.789E-03	.1661	3.293E-03
T	8378(300)	21.85	20.56	3.945E-03	.1132	5.097E-03	.1463	5.642E-03	.1619	3.212E-03
T	8379(300)	22.93	21.63	3.845E-03	.1104	4.968E-03	.1426	5.500E-03	.1579	3.132E-03
T	8380(300)	23.95	22.66	3.757E-03	.1078	4.854E-03	.1393	5.374E-03	.1542	3.060E-03
T	8381(300)	25.00	23.71	3.673E-03	.1054	4.746E-03	.1362	5.254E-03	.1508	2.991E-03

****
* UNCLASSIFIED *
****

8/21/74

NASA-RI STS OH25A

AEDC(ARO,INC.) ARNOLD AFS, TENNESSEE
VON KARMAN GAS DYNAMICS FACILITY
50 INCH HYPERSONIC TUNNEL B

V419-83A

GROUP	CONFIG	MODEL	MACH NO	PO(PSIA)	TO(DEG R)	ALPHA-MODEL	ALPHA-SECTOR	ALPHA-PREBEND	ROLL-MODEL	YAW
40	1	ORBITER	7.98	433.2	1304	30.03	-.03	30.00	180.00	-.00

T-INF (DEG R)	P-INF (PSIA)	Q-INF (PSIA)	V-INF (FT/SEC)	RHO-INF (SLUGS/FT3)	MU-INF (LB-SEC/FT2)	RE/FT (FT-1)	HREF (R= .0175FT)	STREF (R= .0175FT)
95.0	.045	2.010	3810	3.985E-05	7.645E-08	1.986E 06	3.484E-02	2.889E-02

CAMERA	ROLL NO	PAINT TEMP (DEG F)	INITIAL TEMP (DEG F)	SQUARE ROOT (RHOXCXK)	TBAR(TO)	BETA(TO)
TOP(T)	318	300	83	.0544	2.848E-01	3.2876E-01

	PIC NO	TIME	DELTIME	H(TO)	H(TO)/HREF	H(.9TO)	H(.9TO)/HREF	H(.867TO)	H(.867TO)/HREF	ST(TO)
		25.40		MODEL HAS LEFT CENTERLINE						
T	8382(300)	26.05	24.76	3.594E-03	.1031	4.644E-03	.1332	5.141E-03	.1475	2.924E-03
T	8383(300)	27.08	25.79	3.522E-03	.1011	4.550E-03	.1306	5.038E-03	.1445	2.867E-03
T	8384(300)	28.13	26.84	3.452E-03	.0990	4.460E-03	.1280	4.938E-03	.1417	2.809E-03

ERROR IN POWRF BASE<0 A = 6001000323264723 CALL FROM 72651

100

GROUP 41
0318-8388

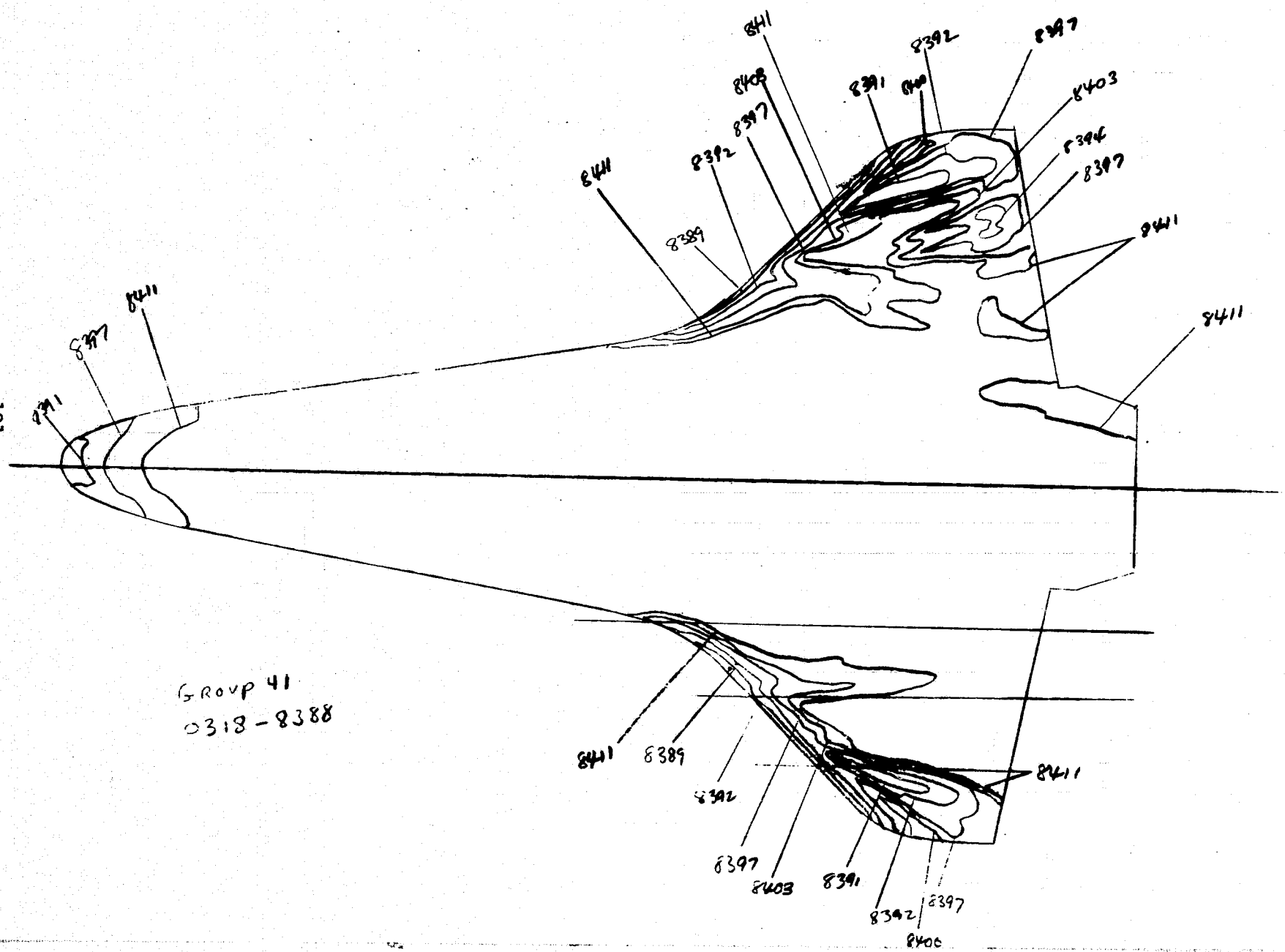

GROUP 41
0318-8388

8/21/74

NASA-RI STS OH25A

V418-83A

AEDC(ARO,INC.) ARNOLD AFS, TENNESSEE
VON KARMAN GAS DYNAMICS FACILITY
50 INCH HYPERSONIC TUNNEL B

GROUP	CONFIG	MODEL	MACH NO	PO(PSIA)	TO(DEG R)	ALPHA-MODEL	ALPHA-SECTOR	ALPHA-PREBEND	ROLL-MODEL	YAW
41	1	ORBITER	7.98	432.1	1294	30.03	-.03	30.00	180.00	-.00

T-INF (DEG R)	P-INF (PSIA)	Q-INF (PSIA)	V-INF (FT/SEC)	RHO-INF (SLUGS/FT3)	MU-INF (LB-SEC/FT2)	RE/FT (FT-1)	HREF (R= .0175FT)	SIREF (R= .0175FT)
94.2	.045	2.005	3795	4.007E-05	7.583E-08	2.005E 06	3.475E-02	2.878E-02

CAMERA	ROLL NO	PAINT TEMP (DEG F)	INITIAL TEMP (DEG F)	SQUARE ROOT (RHOXCXK)	TBAR(TO)	BETA(TO)
TOP(T)	318	350	85	.0550	0	0

	PIC NO	TIME	DELTIME	H(TO)	H(TO)/HREF	H(.9TO)	H(.9TO)/HREF	H(.867TO)	H(.867TO)/HREF	ST(TO)
T	8385(350)	.03		MODEL HAS NOT REACHED CENTERLINE						
T	8386(350)	1.00		MODEL HAS NOT REACHED CENTERLINE						
T	8387(350)	2.03		MODEL HAS NOT REACHED CENTERLINE						
INJECT TIME =		2.25								
T	8388(350)	3.05	1.79	1.823E-02	.5247	2.429E-02	.6992	2.732E-02	.7862	1.480E-02
T	8389(350)	4.10	2.84	1.447E-02	.4163	1.928E-02	.5547	2.168E-02	.6238	1.173E-02
T	8390(350)	5.13	3.87	1.240E-02	.3569	1.652E-02	.4755	1.858E-02	.5347	1.006E-02
T	8391(350)	6.18	4.92	1.100E-02	.3164	1.465E-02	.4215	1.648E-02	.4740	8.916E-03
T	8392(350)	7.23	5.97	9.981E-03	.2872	1.330E-02	.3826	1.496E-02	.4302	8.092E-03
T	8393(350)	8.28	7.02	9.204E-03	.2647	1.226E-02	.3527	1.379E-02	.3966	7.458E-03
T	8394(350)	9.31	8.05	8.597E-03	.2473	1.145E-02	.3295	1.288E-02	.3706	6.970E-03
T	8395(350)	10.36	9.10	8.085E-03	.2325	1.077E-02	.3098	1.211E-02	.3484	6.552E-03
T	8396(350)	11.41	10.15	7.655E-03	.2201	1.020E-02	.2933	1.147E-02	.3298	6.201E-03
T	8397(350)	12.46	11.20	7.287E-03	.2096	9.709E-03	.2792	1.092E-02	.3140	5.903E-03
T	8398(350)	13.49	12.23	6.974E-03	.2005	9.293E-03	.2672	1.045E-02	.3005	5.649E-03
T	8399(350)	14.54	13.29	6.692E-03	.1925	8.917E-03	.2564	1.003E-02	.2884	5.422E-03
T	8400(350)	15.59	14.33	6.442E-03	.1853	8.584E-03	.2469	9.652E-03	.2776	5.219E-03
T	8401(350)	16.64	15.38	6.218E-03	.1788	8.285E-03	.2383	9.317E-03	.2679	5.038E-03
T	8402(350)	17.67	16.41	6.021E-03	.1731	8.022E-03	.2307	9.020E-03	.2594	4.875E-03
T	8403(350)	18.72	17.46	5.836E-03	.1678	7.777E-03	.2236	8.745E-03	.2514	4.724E-03
T	8404(350)	19.77	18.51	5.668E-03	.1630	7.553E-03	.2172	8.493E-03	.2442	4.590E-03
T	8405(350)	20.82	19.56	5.514E-03	.1586	7.347E-03	.2113	8.261E-03	.2376	4.467E-03
T	8406(350)	21.88	20.61	5.371E-03	.1544	7.157E-03	.2057	8.048E-03	.2313	4.346E-03
T	8407(350)	22.90	21.64	5.242E-03	.1507	6.985E-03	.2008	7.855E-03	.2258	4.243E-03
T	8408(350)	23.95	22.69	5.120E-03	.1472	6.822E-03	.1961	7.671E-03	.2205	4.144E-03
T	8409(350)	25.00	23.74	5.005E-03	.1439	6.669E-03	.1917	7.499E-03	.2155	4.050E-03

```
                                        ****************
                                        * UNCLASSIFIED *
                                        ****************
                                              8/21/74

NASA-RI STS OH25A                    AEDC(ARO,INC.) ARNOLD AFS, TENNESSEE
                                      VON KARMAN GAS DYNAMICS FACILITY
V41B-83A                                 50 INCH HYPERSONIC TUNNEL B

GROUP  CONFIG    MODEL      MACH NO    PO(PSIA)  TO(DEG R)  ALPHA-MODEL  ALPHA-SECTOR  ALPHA-PREBEND  ROLL-MODEL  YAW
  41      1    ORBITER        7.98      433.2      1293        30.03         -.03          30.00        180.00      -.00

 T-INF    P-INF   Q-INF   V-INF     RHO-INF      MU-INF        RE/FT       HREF          STREF
(DEG R)  (PSIA)  (PSIA)  (FT/SEC)  (SLUGS/FT3)  (LB-SEC/FT2)  (FT-1)     (R= .0175FT)  (R= .0175FT)
 94.2      .045   2.010    3794     4.019E-05    7.581E-08   2.012E 06   3.479E-02     2.874E-02

CAMERA        ROLL NO  PAINT TEMP (DEG F)   INITIAL TEMP (DEG F)   SQUARE ROOT (RHOXCXK)    TBAR(TO)   BETA(TO)
TOP(T)          318
                          350                  85                  .0550                   3.541E-01  4.4337E-01

   PIC NO      TIME DELTIME      H(TO)      H(TO)/HREF   H(.9TO)     H(.9TO)/HREF H( .867TO)  H( .867TO)/HREF  ST(TO)
T  8410(350) 26.05  24.79      4.898E-03     .1408     6.526E-03      .1876       7.338E-03      .2109       3.962E-03
T  8411(350) 27.11  25.84      4.797E-03     .1379     6.392E-03      .1837       7.187E-03      .2066       3.883E-03
T  8412(350) 28.13  26.87      4.705E-03     .1352     6.269E-03      .1802       7.049E-03      .2026       3.808E-03
             28.46            MODEL HAS LEFT CENTERLINE
T  8413(350) 29.18  27.92      4.615E-03     .1327     6.149E-03      .1767       6.915E-03      .1987       3.735E-03
      ERROR IN POWRF  BASE<0      A = 6001000117201053 CALL FROM 72651
```

GROUP 42
0318-8417

ORIGINAL PAGE IS
OF POOR QUALITY

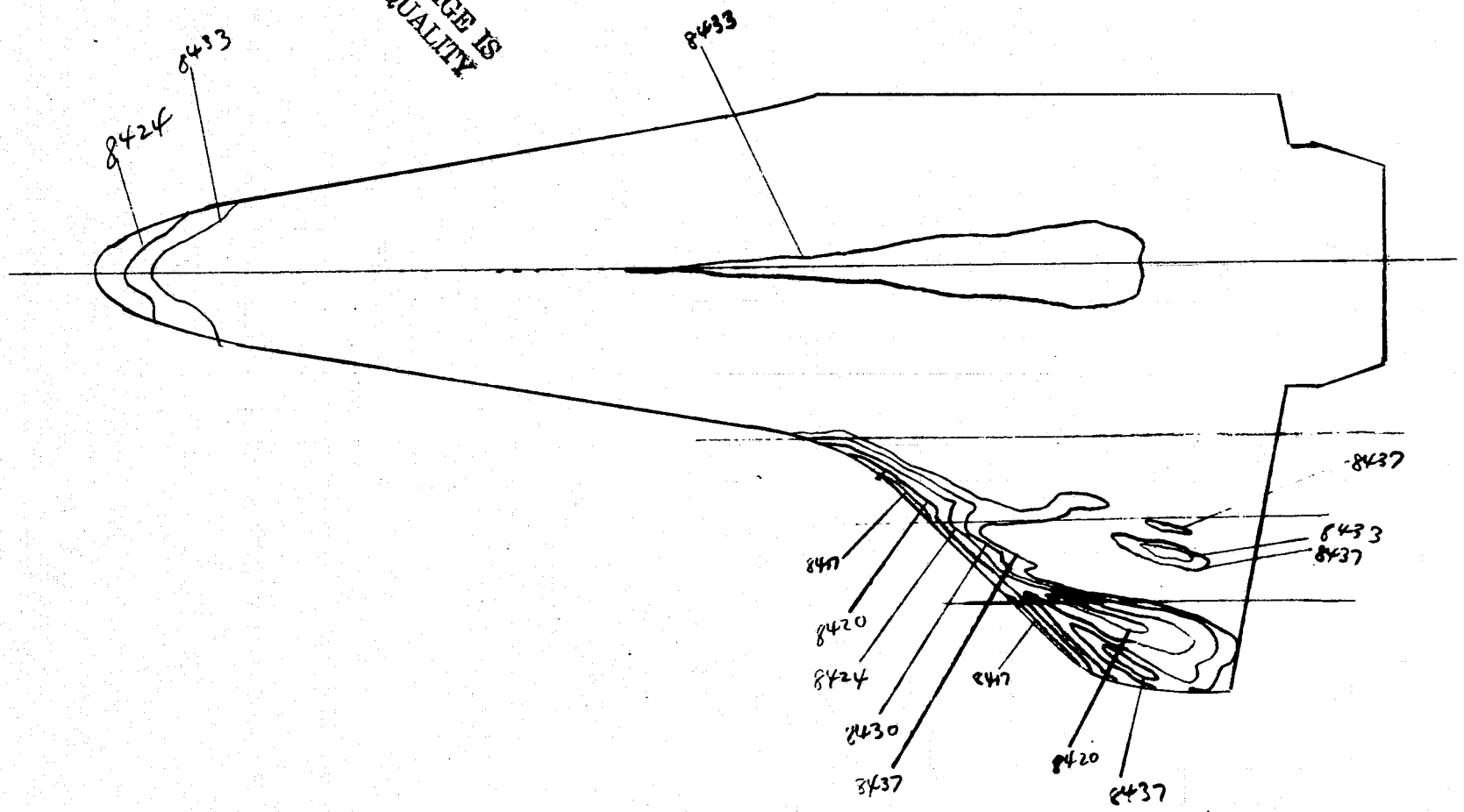

ORIGINAL PAGE IS
OF POOR QUALITY

8/21/74

NASA-RI STS OH25A

V41R-83A

AEDC(ARO,INC.) ARNOLD AFS, TENNESSEE
VON KARMAN GAS DYNAMICS FACILITY
50 INCH HYPERSONIC TUNNEL B

GROUP	CONFIG	MODEL	MACH NO	PO(PSIA)	TO(DEG R)	ALPHA-MODEL	ALPHA-SECTOR	ALPHA-PREBEND	ROLL-MODEL	YAW
42	2	40 PERCENT	7.98	431.1	1292	30.01	-.01	30.00	180.00	-.00

T-INF (DEG R)	P-INF (PSIA)	Q-INF (PSIA)	V-INF (FT/SEC)	RHO-INF (SLUGS/FT3)	MU-INF (LB-SEC/FT2)	RE/FT (FT-1)	HREF (R= .0175FT)	STREF (R= .0175FT)
94.0	.045	2.001	3792	4.005E-05	7.570E-08	2.006E 06	3.470E-02	2.878E-02

CAMERA TOP(T)	ROLL NO	PAINT TEMP (DEG F)	INITIAL TEMP (DEG F)	SQUARE ROOT (RHOXCXK)	TBAR(TO)	BETA(TO)
	318	350	92	.0550	0	0

	PIC NO	TIME	DELTIME	H(TO)	H(TO)/HREF	H(.9TO)	H(.9TO)/HREF	H(.867TO)	H(.867TO)/HREF	ST(TO)
T	8414(350)	.03		MODEL HAS NOT REACHED CENTERLINE						
T	8415(350)	1.00		MODEL HAS NOT REACHED CENTERLINE						
T	8416(350)	2.03		MODEL HAS NOT REACHED CENTERLINE						
INJECT TIME =		2.28								
T	8417(350)	3.08	1.80	1.844E-02	.5314	2.460E-02	.7086	2.767E-02	.7972	1.498E-02
T	8418(350)	4.10	2.83	1.472E-02	.4241	1.963E-02	.5656	2.208E-02	.6363	1.196E-02
T	8419(350)	5.16	3.88	1.257E-02	.3621	1.676E-02	.4829	1.885E-02	.5432	1.021E-02
T	8420(350)	6.21	4.93	1.115E-02	.3210	1.486E-02	.4281	1.672E-02	.4816	9.047E-03
T	8421(350)	7.23	5.95	1.014E-02	.2922	1.352E-02	.3897	1.521E-02	.4384	8.238E-03
T	8422(350)	8.28	7.01	9.349E-03	.2693	1.247E-02	.3591	1.402E-02	.4040	7.588E-03
T	8423(350)	9.34	8.06	8.717E-03	.2511	1.163E-02	.3348	1.308E-02	.3766	7.074E-03
T	8424(350)	10.39	9.11	8.199E-03	.2361	1.093E-02	.3149	1.230E-02	.3542	6.653E-03
T	8425(350)	11.41	10.13	7.773E-03	.2240	1.037E-02	.2987	1.166E-02	.3360	6.313E-03
T	8426(350)	12.46	11.19	7.398E-03	.2130	9.867E-03	.2841	1.110E-02	.3196	6.001E-03
T	8427(350)	13.49	12.21	7.081E-03	.2039	9.443E-03	.2720	1.062E-02	.3060	5.747E-03
T	8428(350)	14.54	13.26	6.794E-03	.1956	9.061E-03	.2609	1.019E-02	.2935	5.511E-03
T	8429(350)	15.59	14.31	6.540E-03	.1883	8.722E-03	.2511	9.812E-03	.2825	5.305E-03
T	8430(350)	16.62	15.34	6.318E-03	.1818	8.425E-03	.2425	9.478E-03	.2728	5.119E-03
T	8431(350)	17.67	16.39	6.112E-03	.1759	8.151E-03	.2346	9.169E-03	.2639	4.955E-03
T	8432(350)	18.72	17.44	5.925E-03	.1706	7.901E-03	.2275	8.888E-03	.2559	4.803E-03
T	8433(350)	19.77	18.49	5.754E-03	.1656	7.673E-03	.2208	8.632E-03	.2484	4.661E-03
T	8434(350)	20.80	19.52	5.601E-03	.1612	7.469E-03	.2150	8.402E-03	.2419	4.540E-03
T	8435(350)	21.85	20.57	5.456E-03	.1571	7.276E-03	.2094	8.185E-03	.2356	4.423E-03
T	8436(350)	22.90	21.62	5.321E-03	.1532	7.097E-03	.2043	7.983E-03	.2298	4.315E-03
T	8437(350)	23.95	22.67	5.197E-03	.1496	6.930E-03	.1995	7.796E-03	.2244	4.211E-03
T	8438(350)	24.98	23.70	5.083E-03	.1463	6.778E-03	.1951	7.625E-03	.2195	4.119E-03

****
* UNCLASSIFIED *
****

8/21/74

NASA-RI STS OH25A

V418-83A

AEDC(ARO.INC.) ARNOLD AFS, TENNESSEE
VON KARMAN GAS DYNAMICS FACILITY
50 INCH HYPERSONIC TUNNEL B

GROUP	CONFIG	MODEL	MACH NO	PO(PSIA)	TO(DEG R)	ALPHA-MODEL	ALPHA-SECTOR	ALPHA-PREBEND	ROLL-MODEL	YAW
42	2	40 PERCENT	7.98	432.3	1291	30.01	-.01	30.00	180.00	-.00

T-INF (DEG R)	P-INF (PSIA)	Q-INF (PSIA)	V-INF (FT/SEC)	RHO-INF (SLUGS/FT3)	MU-INF (LB-SEC/FT2)	RE/FT (FT-1)	HREF (R= .0175FT)	STREF (R= .0175FT)
99.0	.045	2.006	3791	4.017E-05	7.569E-08	2.012E 06	3.475E-02	2.874E-02

CAMERA TOP(T)	ROLL NO	PAINT TEMP (DEG F)	INITIAL TEMP (DEG F)	SQUARE ROOT (RHOXCXK)	TBAR(TO)	BETA(TO)
	318	350	82	.0550	3.577E-01	4.4990E-01

	PIC NO	TIME	DELTIME	H(TO)	H(TO)/HREF	H(.9TO)	H(.9TO)/HREF	H(.867TO)	H(.867TO)/HREF	ST(TO)
T	8439(350)	26.03	24.75	4.974E-03	.1432	6.633E-03	.1909	7.462E-03	.2148	4.031E-03
T	8440(350)	27.08	25.80	4.871E-03	.1402	6.496E-03	.1870	7.308E-03	.2104	3.949E-03
		27.98		MODEL HAS LEFT CENTERLINE						
T	8441(350)	28.13	26.85	4.775E-03	.1374	6.368E-03	.1833	7.164E-03	.2061	3.868E-03
T	8442(350)	29.18	27.90	4.684E-03	.1349	6.247E-03	.1799	7.027E-03	.2023	3.799E-03
T	8443(350)	30.21	28.93	4.600E-03	.1324	6.135E-03	.1766	6.902E-03	.1986	3.727E-03

ERROR IN POWRF BASE<0 A = 6001000064653215 CALL FROM 72651

ORIGINAL PAGE IS
OF POOR QUALITY

GROUP 43
0318- 8447

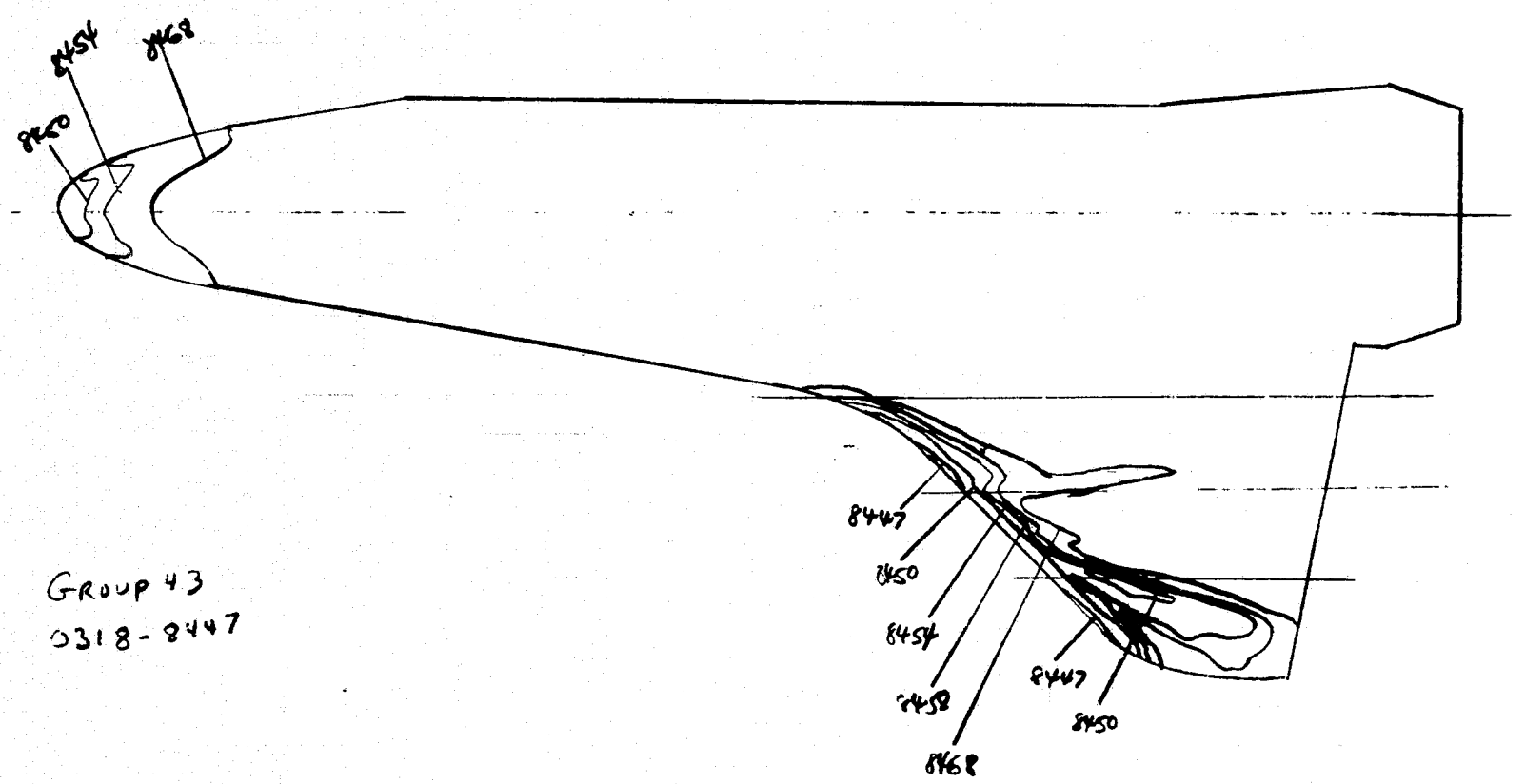

GROUP 43
0318-8447

8/21/74

NASA-RI STS OH25A

V438-83A

AEDC(ARO,INC.) ARNOLD AFS, TENNESSEE
VON KARMAN GAS DYNAMICS FACILITY
50 INCH HYPERSONIC TUNNEL B

GROUP	CONFIG	MODEL	MACH NO	PO(PSIA)	TO(DEG R)	ALPHA-MODEL	ALPHA-SECTOR	ALPHA-PREWEND	ROLL-MODEL	YAW
43	3	BODY FLUSH	7.98	431.2	1293	30.01	-.01	30.00	180.00	-.00

T-INF (DEG R)	P-INF (PSIA)	Q-INF (PSIA)	V-INF (FT/SEC)	RHO-INF (SLUGS/FT3)	MU-INF (LB-SEC/FT2)	RE/FT (FT-1)	HREF (R= .0175FT)	STREF (R= .0175FT)
94.1	.045	2.001	3794	4.001E-05	7.580E-08	2.003E 06	3.471E-02	2.880E-02

CAMERA TOP(T)	ROLL NO	PAINT TEMP (DEG F)	INITIAL TEMP (DEG F)	SQUARE ROOT (RHOXCXK)	TBAR(TO)	BETA(TO)
	218	350	82	.8550	0	0

	PIC NO	TIME	DELTIME	H(TO)	H(TO)/HREF	H(.9TO)	H(.9TO)/HREF	H(.867TO)	H(.867TO)/HREF	ST(TO)
T	8444(350)	.03		MODEL HAS NOT REACHED CENTERLINE						
T	8445(350)	1.00		MODEL HAS NOT REACHED CENTERLINE						
T	8446(350)	2.03		MODEL HAS NOT REACHED CENTERLINE						
INJECT TIME =		2.33								
T	8447(350)	3.08	1.77	1.852E-02	.5335	2.468E-02	.7109	2.775E-02	.7993	1.505E-02
T	8448(350)	4.10	2.80	1.474E-02	.4245	1.964E-02	.5656	2.206E-02	.6360	1.198E-02
T	8449(350)	5.16	3.85	1.257E-02	.3619	1.674E-02	.4822	1.883E-02	.5422	1.021E-02
T	8450(350)	6.18	4.88	1.117E-02	.3217	1.488E-02	.4286	1.673E-02	.4819	9.077E-03
T	8451(350)	7.23	5.93	1.013E-02	.2916	1.349E-02	.3886	1.517E-02	.4369	8.227E-03
T	8452(350)	8.28	6.99	9.333E-03	.2687	1.244E-02	.3581	1.398E-02	.4026	7.580E-03
T	8453(350)	9.34	8.03	8.700E-03	.2505	1.159E-02	.3338	1.304E-02	.3754	7.067E-03
T	8454(350)	10.36	9.06	8.193E-03	.2359	1.092E-02	.3143	1.227E-02	.3534	6.654E-03
T	8455(350)	11.41	10.11	7.755E-03	.2232	1.033E-02	.2974	1.162E-02	.3345	6.294E-03
T	8456(350)	12.46	11.16	7.380E-03	.2125	9.834E-03	.2832	1.106E-02	.3184	5.994E-03
T	8457(350)	13.52	12.21	7.056E-03	.2031	9.401E-03	.2706	1.057E-02	.3043	5.728E-03
T	8458(350)	14.54	13.23	6.777E-03	.1951	9.029E-03	.2599	1.015E-02	.2923	5.501E-03
T	8459(350)	15.59	14.29	6.522E-03	.1878	8.691E-03	.2502	9.772E-03	.2813	5.295E-03
T	8460(350)	16.64	15.34	6.295E-03	.1812	8.388E-03	.2415	9.431E-03	.2716	5.111E-03
T	8461(350)	17.67	16.36	6.094E-03	.1754	8.120E-03	.2337	9.131E-03	.2628	4.947E-03
T	8462(350)	18.72	17.41	5.908E-03	.1700	7.871E-03	.2266	8.851E-03	.2548	4.795E-03
T	8463(350)	19.77	18.47	5.737E-03	.1651	7.644E-03	.2200	8.595E-03	.2474	4.657E-03
T	8464(350)	20.82	19.52	5.580E-03	.1606	7.435E-03	.2140	8.361E-03	.2406	4.527E-03
T	8465(350)	21.85	20.54	5.439E-03	.1566	7.247E-03	.2086	8.149E-03	.2346	4.416E-03
T	8466(350)	22.90	21.59	5.305E-03	.1527	7.069E-03	.2034	7.948E-03	.2288	4.305E-03
T	8467(350)	23.95	22.65	5.181E-03	.1491	6.903E-03	.1987	7.762E-03	.2234	4.205E-03
T	8468(350)	25.00	23.70	5.064E-03	.1457	6.748E-03	.1942	7.588E-03	.2184	4.109E-03

****
* UNCLASSIFIED *
****

8/21/74

NASA-RI STS OH25A

V41B-83A

AEDC(ARO,INC.) ARNOLD AFS, TENNESSEE
VON KARMAN GAS DYNAMICS FACILITY
50 INCH HYPERSONIC TUNNEL H

GROUP	CONFIG	MODEL	MACH NO	PO(PSIA)	TO(DEG R)	ALPHA-MODEL	ALPHA-SECTOR	ALPHA-PREBEND	ROLL-MODEL	YAW
43	3	BODY FLUSH	7.98	432.1	1294	30.01	-.01	30.00	180.00	-.00

T-INF (DEG R)	P-INF (PSIA)	Q-INF (PSIA)	V-INF (FT/SEC)	RHO-INF (SLUGS/FT3)	MU-INF (LB-SEC/FT2)	RE/FT (FT-1)	HREF (R= .0175FT)	STREF (R= .0175FT)
94.2	.045	2.005	3795	4.008E-05	7.582E-08	2.006E 06	3.475E-02	2.878E-02

CAMERA	ROLL NO	PAINT TEMP (DEG F)	INITIAL TEMP (DEG F)	SQUARE ROOT (RHOXCXK)	TBAR(TO)	BETA(TO)
TOP(T)	318	350	82	.0550	3.568E-01	4.4824E-01

	PIC NO	TIME	DELTIME	H(TO)	H(TO)/HREF	H(.9TO)	H(.9TO)/HREF	H(.867TO)	H(.867TO)/HREF	ST(TO)
T	8469(350)	26.03	24.72	4.958E-03	.1427	6.606E-03	.1901	7.428E-03	.2138	4.024E-03
		26.98		MODEL HAS LEFT CENTERLINE						
T	8470(350)	27.08	25.77	4.856E-03	.1398	6.470E-03	.1862	7.275E-03	.2094	3.941E-03
T	8471(350)	28.13	26.83	4.760E-03	.1370	6.342E-03	.1826	7.131E-03	.2053	3.865E-03

ERROR IN POWRF BASE<0 A = 6001000117201053 CALL FROM 72651

0318-8475

GROUP 44

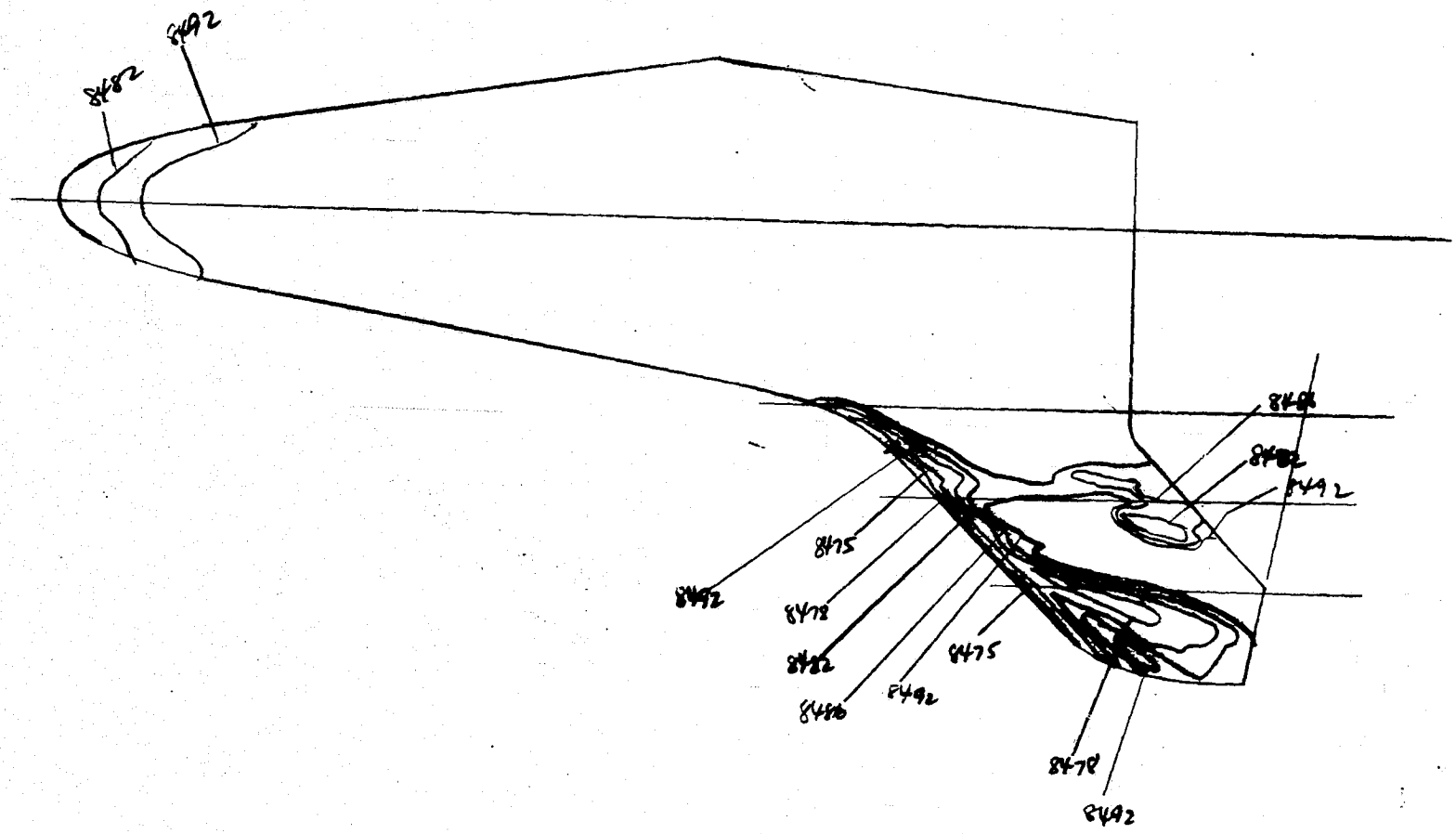

8/21/74

NASA-RI STS OH25A

V418-83A

AEDC(ARO,INC.) ARNOLD AFS, TENNESSEE
VON KARMAN GAS DYNAMICS FACILITY
50 INCH HYPERSONIC TUNNEL B

GROUP	CONFIG	MODEL	MACH NO	PO(PSIA)	TO(DEG R)	ALPHA-MODEL	ALPHA-SECTOR	ALPHA-PREBEND	ROLL-MODEL	YAW
44	4	LEADING EDGE	7.98	431.6	1299	30.01	-.01	30.00	180.00	-.00

T-INF (DEG R)	P-INF (PSIA)	Q-INF (PSIA)	V-INF (FT/SEC)	RHO-INF (SLUGS/FT3)	MU-INF (LB-SEC/FT2)	RE/FT (FT-1)	HREF (R= .0175FT)	STREF (R= .0175FT)
94.6	.045	2.003	3803	3.986E-05	7.614E-08	1.991E 06	3.475E-02	2.887E-02

CAMERA	ROLL NO	PAINT TEMP (DEG F)	INITIAL TEMP (DEG F)	SQUARE ROOT (RHOXCXK)	TBAR(TO)	BETA(TO)
TOP(T)	318	350	83	.0550	0	0

	PIC NO	TIME	DELTIME	H(TO)	H(TO)/HREF	H(.9TO)	H(.9TO)/HREF	H(.867TO)	H(.867TO)/HREF	ST(TO)
T	8472(350)	0		MODEL HAS NOT REACHED CENTERLINE						
T	8473(350)	1.00		MODEL HAS NOT REACHED CENTERLINE						
T	8474(350)	2.03		MODEL HAS NOT REACHED CENTERLINE						
INJECT TIME =		2.28								
T	8475(350)	3.05	1.77	1.823E-02	.5244	2.424E-02	.6971	2.722E-02	.7829	1.482E-02
T	8476(350)	4.10	2.83	1.445E-02	.4156	1.921E-02	.5524	2.157E-02	.6204	1.175E-02
T	8477(350)	5.13	3.85	1.238E-02	.3559	1.645E-02	.4731	1.848E-02	.5313	1.006E-02
T	8478(350)	6.18	4.90	1.097E-02	.3155	1.458E-02	.4193	1.638E-02	.4710	8.917E-03
T	8479(350)	7.21	5.93	9.975E-03	.2868	1.326E-02	.3813	1.489E-02	.4282	8.106E-03
T	8480(350)	8.26	6.98	9.194E-03	.2644	1.222E-02	.3515	1.373E-02	.3947	7.473E-03
T	8481(350)	9.31	8.03	8.571E-03	.2464	1.139E-02	.3276	1.280E-02	.3679	6.965E-03
T	8482(350)	10.34	9.06	8.071E-03	.2320	1.073E-02	.3084	1.205E-02	.3464	6.556E-03
T	8483(350)	11.39	10.11	7.640E-03	.2196	1.016E-02	.2920	1.141E-02	.3279	6.206E-03
T	8484(350)	12.44	11.16	7.271E-03	.2090	9.666E-03	.2778	1.086E-02	.3120	5.905E-03
T	8485(350)	13.44	12.16	6.965E-03	.2002	9.259E-03	.2662	1.040E-02	.2989	5.658E-03
T	8486(350)	14.47	13.19	6.689E-03	.1922	8.892E-03	.2555	9.986E-03	.2870	5.431E-03
T	8487(350)	15.52	14.24	6.437E-03	.1850	8.557E-03	.2459	9.611E-03	.2762	5.227E-03
T	8488(350)	16.57	15.29	6.212E-03	.1786	8.258E-03	.2374	9.274E-03	.2666	5.045E-03
T	8489(350)	17.62	16.34	6.009E-03	.1727	7.988E-03	.2296	8.971E-03	.2579	4.881E-03
T	8490(350)	18.65	17.37	5.829E-03	.1676	7.748E-03	.2228	8.702E-03	.2502	4.736E-03
T	8491(350)	19.70	18.42	5.660E-03	.1627	7.524E-03	.2162	8.450E-03	.2429	4.596E-03
T	8492(350)	20.75	19.47	5.505E-03	.1582	7.318E-03	.2103	8.219E-03	.2362	4.470E-03
T	8493(350)	21.80	20.52	5.362E-03	.1541	7.128E-03	.2048	8.006E-03	.2300	4.353E-03
T	8494(350)	22.83	21.55	5.233E-03	.1504	6.956E-03	.1999	7.813E-03	.2245	4.248E-03
T	8495(350)	23.90	22.62	5.107E-03	.1468	6.789E-03	.1951	7.625E-03	.2191	4.147E-03
T	8496(350)	24.93	23.65	4.995E-03	.1435	6.640E-03	.1908	7.457E-03	.2142	4.053E-03

****
* UNCLASSIFIED *
****

8/21/74

NASA-RI STS OH25A

AEDC(ARO,INC.) ARNOLD AFS, TENNESSEE
VON KARMAN GAS DYNAMICS FACILITY
50 INCH HYPERSONIC TUNNEL B

V419-83A

GROUP	CONFIG	MODEL	MACH NO	PO(PSIA)	TO(DEG R)	ALPHA-MODEL	ALPHA-SECTOR	ALPHA-PREBEND	ROLL-MODEL	YAW
44	4	LEADING EDGE	7.98	432.9	1300	30.01	-.01	30.00	180.00	-.00

T-INF (DEG R)	P-INF (PSIA)	Q-INF (PSIA)	V-INF (FT/SEC)	RHO-INF (SLUGS/FT3)	MU-INF (LB-SEC/FT2)	RE/FT (FT-1)	HREF (R= .0175FT)	STREF (R= .0175FT)
94.6	.045	2.009	3803	3.997E-05	7.617E-08	1.996E 06	3.481E-02	2.883E-02

CAMERA	ROLL NO	PAINT TEMP (DEG F)	INITIAL TEMP (DEG F)	SQUARE ROOT (RHOXCXK)	TBAR(TO)	BETA(TO)
TOP(T)	318	350	83	.0550	3.531E-01	4.4166E-01

	PIC NO	TIME	DELTIME	H(TO)	H(TO)/HREF	H(.9TO)	H(.9TO)/HREF	H(.867TO)	H(.867TO)/HREF	ST(TO)
T	8497(350)	25.58	24.71	4.888E-03	.1404	6.497E-03	.1867	7.297E-03	.2097	3.968E-03
		26.53		MODEL HAS LEFT CENTERLINE						
T	8498(350)	27.03	25.75	4.787E-03	.1376	6.363E-03	.1829	7.146E-03	.2054	3.887E-03
T	8499(350)	28.06	26.78	4.694E-03	.1349	6.240E-03	.1793	7.008E-03	.2014	3.811E-03

ERROR IN POWRF BASE<0 A = 6001000064653215 CALL FROM 72651

GROUP 45
0318- 8503

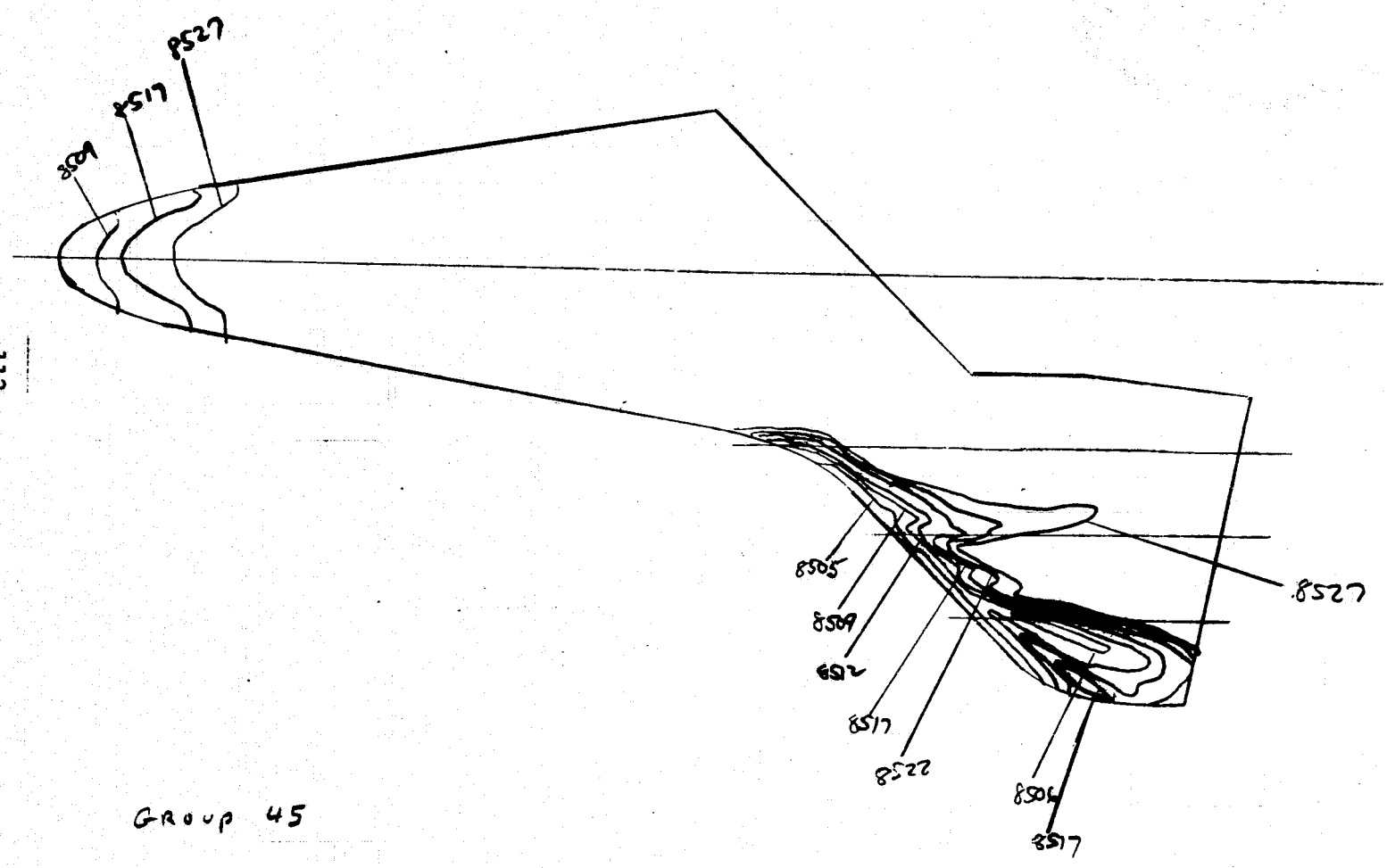

GROUP 45

0318- 8503

8/21/74

NASA-RI STS OH25A

V41A-83A

AEDC(ARO,INC.) ARNOLD AFS, TENNESSEE
VON KARMAN GAS DYNAMICS FACILITY
50 INCH HYPERSONIC TUNNEL A

GROUP	CONFIG	MODEL	MACH NO	PO(PSIA)	TO(DEG R)	ALPHA-MODEL	ALPHA-SECTOR	ALPHA-PREBEND	ROLL-MODEL	YAW
45	5	TRANSITION	7.98	432.6	1308	30.01	-.01	30.00	180.00	-.00

T-INF (DEG R)	P-INF (PSIA)	Q-INF (PSIA)	V-INF (FT/SEC)	RHO-INF (SLUGS/FT3)	MU-INF (LB-SEC/FT2)	RE/FT (FT-1)	HREF (R= .0175FT)	STREF (R= .0175FT)
95.2	.045	2.008	3816	3.968E-05	7.666E-08	1.975E 06	3.484E-02	2.895E-02

CAMERA	ROLL NO	PAINT TEMP (DEG F)	INITIAL TEMP (DEG F)	SQUARE ROOT (RHOXCXK)	TBAR(TO)	BETA(TO)
10P(T)	318	350	82	.0550	0	0

	PIC NO	TIME	DELTIME	H(TO)	H(TO)/HREF	H(.9TO)	H(.9TO)/HREF	H(.867TO)	H(.867TO)/HREF	ST(TO)
T	8500(350)	.03		MODEL HAS NOT REACHED CENTERLINE						
T	8501(350)	1.00		MODEL HAS NOT REACHED CENTERLINE						
T	8502(350)	2.00		MODEL HAS NOT REACHED CENTERLINE						
INJECT TIME =		2.33								
T	8503(350)	3.05	1.75	1.810E-02	.5196	2.397E-02	.6880	2.687E-02	.7712	1.474E-02
T	8504(350)	4.10	2.80	1.430E-02	.4106	1.894E-02	.5436	2.123E-02	.6093	1.164E-02
T	8505(350)	5.13	3.82	1.223E-02	.3510	1.620E-02	.4648	1.816E-02	.5210	9.951E-03
T	8506(350)	6.18	4.88	1.044E-02	.3110	1.435E-02	.4118	1.608E-02	.4616	8.822E-03
T	8507(350)	7.23	5.93	9.828E-03	.2819	1.301E-02	.3733	1.459E-02	.4184	7.990E-03
T	8508(350)	8.26	6.95	9.074E-03	.2601	1.201E-02	.3444	1.347E-02	.3860	7.367E-03
T	8509(350)	9.31	8.00	8.457E-03	.2425	1.120E-02	.3211	1.255E-02	.3599	6.872E-03
T	8510(350)	10.36	9.06	7.951E-03	.2280	1.053E-02	.3019	1.180E-02	.3384	6.461E-03
T	8511(350)	11.41	10.11	7.526E-03	.2158	9.965E-03	.2857	1.117E-02	.3203	6.114E-03
T	8512(350)	12.44	11.13	7.171E-03	.2056	9.495E-03	.2722	1.064E-02	.3052	5.826E-03
T	8513(350)	13.49	12.19	6.855E-03	.1966	9.076E-03	.2603	1.017E-02	.2917	5.570E-03
T	8514(350)	14.54	13.23	6.577E-03	.1886	8.708E-03	.2497	9.761E-03	.2798	5.341E-03
T	8515(350)	15.59	14.29	6.330E-03	.1816	8.382E-03	.2404	9.395E-03	.2695	5.146E-03
T	8516(350)	16.62	15.31	6.114E-03	.1754	8.096E-03	.2322	9.075E-03	.2603	4.971E-03
T	8517(350)	17.67	16.36	5.915E-03	.1696	7.832E-03	.2245	8.778E-03	.2516	4.803E-03
T	8518(350)	18.72	17.41	5.733E-03	.1644	7.592E-03	.2177	8.509E-03	.2440	4.660E-03
T	8519(350)	19.77	18.47	5.568E-03	.1596	7.372E-03	.2114	8.264E-03	.2369	4.523E-03
T	8520(350)	20.80	19.49	5.419E-03	.1554	7.176E-03	.2058	8.043E-03	.2306	4.404E-03
T	8521(350)	21.85	20.54	5.279E-03	.1513	6.990E-03	.2004	7.835E-03	.2246	4.287E-03
T	8522(350)	22.90	21.59	5.149E-03	.1476	6.817E-03	.1955	7.642E-03	.2191	4.184E-03
T	8523(350)	23.95	22.65	5.028E-03	.1441	6.657E-03	.1908	7.462E-03	.2139	4.083E-03
T	8524(350)	24.98	23.67	4.918E-03	.1409	6.511E-03	.1866	7.299E-03	.2092	3.992E-03

****
* UNCLASSIFIED *
****

8/21/74

NASA-RI STS OH25A

AEDC(ARO,INC.) ARNOLD AFS, TENNESSEE
VON KARMAN GAS DYNAMICS FACILITY
50 INCH HYPERSONIC TUNNEL A

V418-83A

GROUP	CONFIG	MODEL	MACH NO	PO(PSIA)	TO(DEG R)	ALPHA-MODEL	ALPHA-SECTOR	ALPHA-PREBEND	ROLL-MODEL	YAW
45	5	TRANSITION	7.98	434.0	1309	30.01	-.01	30.00	180.00	-.00

T-INF (DEG R)	P-INF (PSIA)	Q-INF (PSIA)	V-INF (FT/SEC)	RHO-INF (SLUGS/FT3)	MU-INF (LB-SEC/FT2)	RE/FT (FT-1)	HREF (R= .0175FT)	STREF (R= .0175FT)
95.3	.045	2.014	3816	3.980E-05	7.669E-08	1.980E 06	3.489E-02	2.892E-02

CAMERA	ROLL NO	PAINT TEMP (DEG F)	INITIAL TEMP (DEG F)	SQUARE ROOT (RHOXCXK)	TRAR(TO)	BETA(TO)
TOP(T)	318	350	82	.0550	3.494E-01	4.3502E-01

	PIC NO	TIME	DELTIME	H(TO)	H(TO)/HREF	H(.9TO)	H(.9TO)/HREF	H(.867TO)	H(.867TO)/HREF	ST(TO)
T	8525(350)	26.03	24.72	4.812E-03	.1379	6.371E-03	.1826	7.142E-03	.2047	3.906E-03
T	8526(350)	27.08	25.77	4.713E-03	.1351	6.240E-03	.1788	6.995E-03	.2005	3.825E-03
		27.43		MODEL HAS LEFT CENTERLINE						
T	8527(350)	28.13	26.83	4.620E-03	.1324	6.117E-03	.1753	6.856E-03	.1965	3.750E-03
T	8528(350)	29.16	27.85	4.534E-03	.1300	6.003E-03	.1721	6.729E-03	.1929	3.682E-03
T	8529(350)	30.21	28.90	4.450E-03	.1275	5.893E-03	.1688	6.605E-03	.1893	3.611E-03

ERROR IN FOWRF BASE<0 A = 6001000117201053 CALL FROM 72651

0318- 8533
Group46

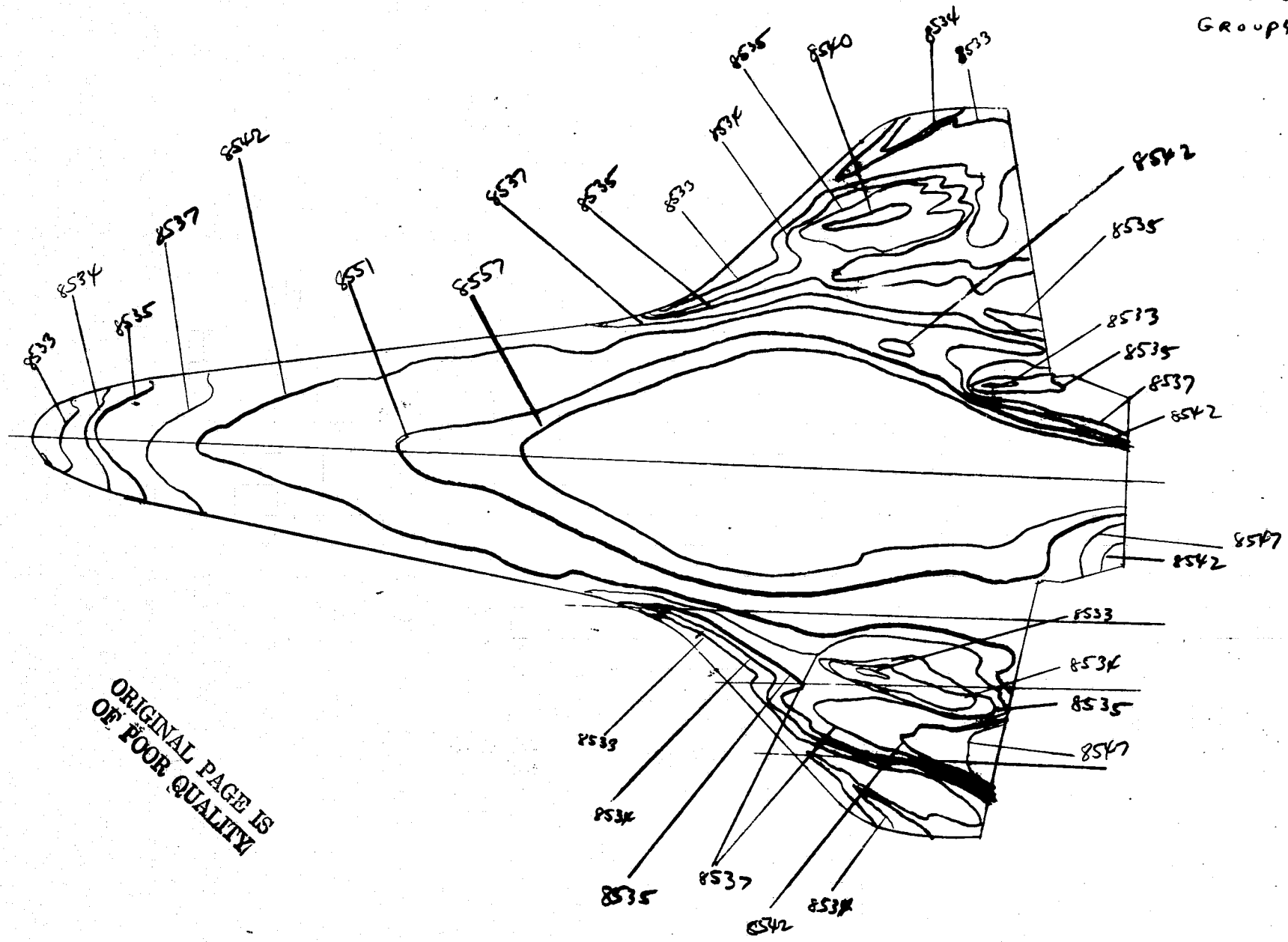

ORIGINAL PAGE IS
OF POOR QUALITY

8/21/74

NASA-RI STS OH25A

AEDC(ARO,INC.) ARNOLD AFS, TENNESSEE
VON KARMAN GAS DYNAMICS FACILITY
50 INCH HYPERSONIC TUNNEL B

V418-83A

GROUP	CONFIG	MODEL	MACH NO	PO(PSIA)	TO(DEG R)	ALPHA-MODEL	ALPHA-SECTOR	ALPHA-PREBEND	ROLL-MODEL	YAW
46	1	ORBITER	7.98	428.3	1314	30.01	-.01	30.00	180.00	-.00

T-INF (DEG R)	P-INF (PSIA)	Q-INF (PSIA)	V-INF (FT/SEC)	RHO-INF (SLUGS/FT3)	MU-INF (LB-SEC/FT2)	RE/FT (FT-1)	HREF (R= .0175FT)	STREF (R= .0175FT)
95.7	.045	1.988	3825	3.910E-05	7.704E-08	1.941E 06	3.469E-02	2.918E-02

CAMERA	ROLL NO	PAINT TEMP (DEG F)	INITIAL TEMP (DEG F)	SQUARE ROOT (RHOXCXK)	TBAR(TO)	BETA(TO)
TOP(T)	318	225	84	.0528	0	0

	PIC NO	TIME	DELTIME	H(TO)	H(TO)/HREF	H(.9TO)	H(.9TO)/HREF	H(.867TO)	H(.867TO)/HREF	ST(TO)
T	8530(225)	.03		MODEL HAS NOT REACHED CENTERLINE						
T	8531(225)	1.00		MODEL HAS NOT REACHED CENTERLINE						
T	8532(225)	2.03		MODEL HAS NOT REACHED CENTERLINE						
INJECT TIME =		2.25								
T	8533(225)	3.08	1.81	7.458E-03	.2148	9.335E-03	.2698	1.018E-02	.2932	6.176E-03
T	8534(225)	4.10	2.84	5.960E-03	.1716	7.460E-03	.2148	8.136E-03	.2343	4.936E-03
T	8535(225)	5.16	3.89	5.092E-03	.1466	6.374E-03	.1835	6.951E-03	.2001	4.214E-03
T	8536(225)	6.21	4.94	4.518E-03	.1300	5.655E-03	.1628	6.168E-03	.1775	3.737E-03
T	8537(225)	7.26	5.99	4.103E-03	.1181	5.136E-03	.1478	5.601E-03	.1612	3.393E-03
T	8538(225)	8.28	7.02	3.791E-03	.1091	4.745E-03	.1365	5.175E-03	.1489	3.134E-03
T	8539(225)	9.34	8.07	3.535E-03	.1017	4.426E-03	.1274	4.826E-03	.1389	2.924E-03
T	8540(225)	10.39	9.12	3.326E-03	.0956	4.163E-03	.1197	4.540E-03	.1306	2.747E-03
T	8541(225)	11.44	10.17	3.149E-03	.0906	3.942E-03	.1134	4.299E-03	.1236	2.601E-03
T	8542(225)	12.46	11.20	3.001E-03	.0863	3.757E-03	.1080	4.097E-03	.1178	2.478E-03
T	8543(225)	13.47	12.20	2.876E-03	.0827	3.599E-03	.1035	3.926E-03	.1129	2.374E-03
T	8544(225)	14.52	13.25	2.759E-03	.0793	3.454E-03	.0993	3.767E-03	.1083	2.277E-03
T	8545(225)	15.57	14.30	2.656E-03	.0763	3.324E-03	.0956	3.626E-03	.1042	2.191E-03
T	8546(225)	16.62	15.35	2.563E-03	.0737	3.209E-03	.0922	3.499E-03	.1006	2.115E-03
T	8547(225)	17.67	16.41	2.480E-03	.0713	3.104E-03	.0892	3.385E-03	.0973	2.045E-03
T	8548(225)	18.70	17.43	2.406E-03	.0691	3.011E-03	.0865	3.284E-03	.0944	1.983E-03
T	8549(225)	19.75	18.48	2.336E-03	.0671	2.924E-03	.0840	3.189E-03	.0916	1.926E-03
T	8550(225)	20.80	19.53	2.273E-03	.0653	2.845E-03	.0817	3.102E-03	.0891	1.873E-03
T	8551(225)	21.85	20.59	2.214E-03	.0636	2.771E-03	.0796	3.022E-03	.0868	1.823E-03
T	8552(225)	22.88	21.61	2.161E-03	.0620	2.705E-03	.0777	2.950E-03	.0847	1.779E-03
T	8553(225)	23.93	22.66	2.110E-03	.0606	2.641E-03	.0758	2.880E-03	.0827	1.738E-03
T	8554(225)	24.98	23.71	2.063E-03	.0592	2.582E-03	.0741	2.816E-03	.0809	1.698E-03

****
* UNCLASSIFIED *
****

8/21/74

NASA-RI STS OH25A

V41B-83A

AEDC(ARO,INC.) ARNOLD AFS, TENNESSEE
VON KARMAN GAS DYNAMICS FACILITY
50 INCH HYPERSONIC TUNNEL B

GROUP	CONFIG	MODEL	MACH NO	PO(PSIA)	TO(DEG R)	ALPHA-MODEL	ALPHA-SECTOR	ALPHA-PREBEND	ROLL-MODEL	YAW
46	1	ORBITER	7.98	431.6	1315	30.01	-.01	30.00	180.00	-.00

T-INF (DEG R)	P-INF (PSIA)	Q-INF (PSIA)	V-INF (FT/SEC)	RHO-INF (SLUGS/FT3)	MU-INF (LB-SEC/FT2)	RE/FT (FT-1)	HREF (R= .0175FT)	STREF (R= .0175FT)
95.7	.045	2.003	3825	3.940E-05	7.705E-08	1.956E 06	3.483E-02	2.908E-02

CAMERA	ROLL NO	PAINT TEMP (DEG F)	INITIAL TEMP (DEG F)	SQUARE ROOT (RHOXCXK)	TBAR(TO)	BETA(TO)
TOP(T)	318	225	84	.0528	1.831E-01	1.9023E-01

	PIC NO	TIME	DELTIME	H(TO)	H(TO)/HREF	H(.9TO)	H(.9TO)/HREF	H(.867TO)	H(.867TO)/HREF	ST(TO)
T	8555(225)	26.03	24.77	2.018E-03	.0579	2.526E-03	.0725	2.755E-03	.0791	1.662E-03
T	8556(225)	27.08	25.82	1.977E-03	.0567	2.474E-03	.0710	2.699E-03	.0775	1.627E-03
		27.81		MODEL HAS LEFT CENTERLINE						
T	8557(225)	28.13	26.87	1.938E-03	.0556	2.426E-03	.0696	2.645E-03	.0760	1.595E-03
T	8558(225)	29.16	27.89	1.902E-03	.0546	2.381E-03	.0683	2.596E-03	.0745	1.564E-03

ERROR IN POWRF BASE<0 A = 6001000117201053 CALL FROM 72651

GROUP 47

0318 - 8562

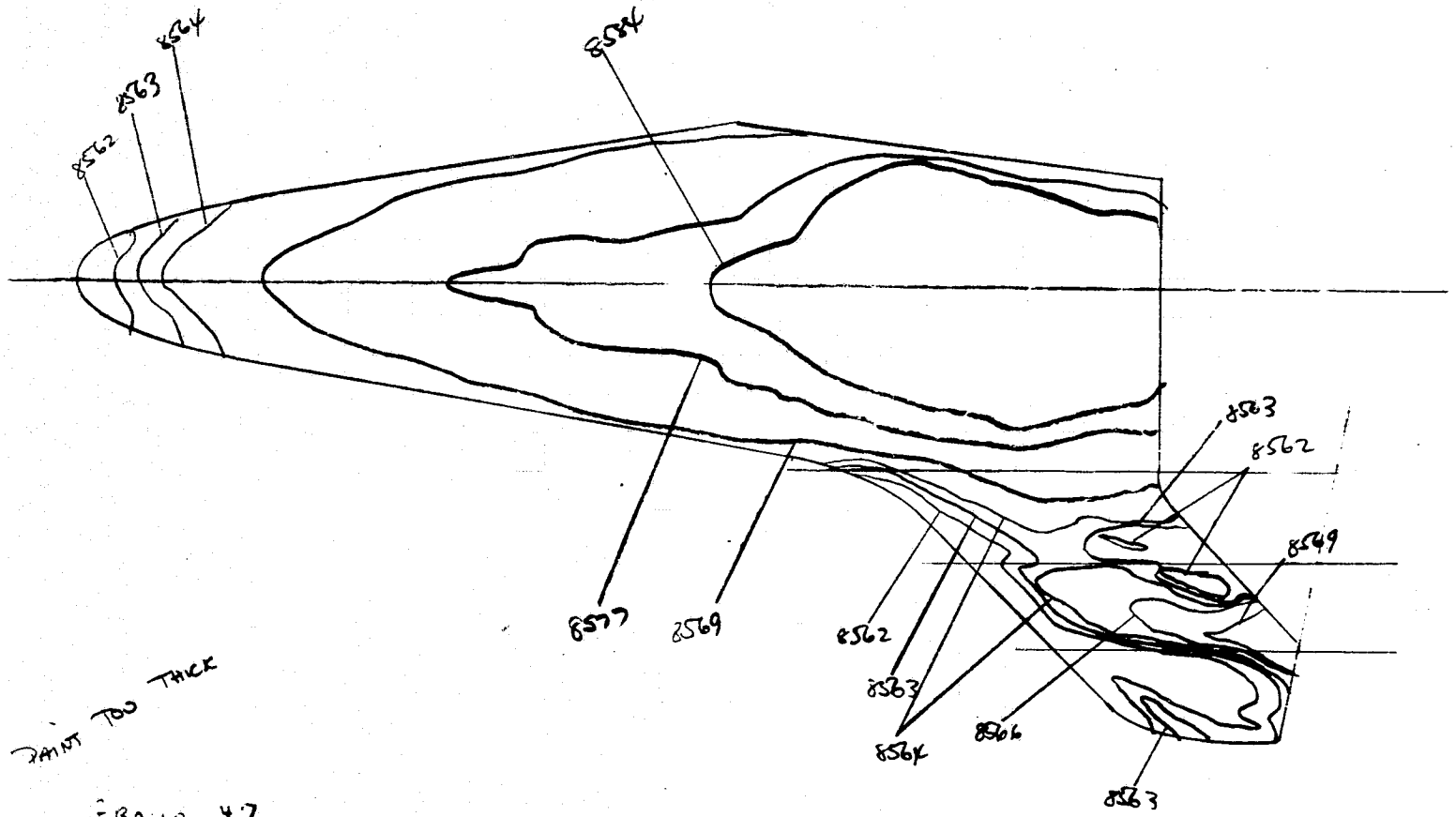

PAINT TOO THICK

GROUP 47

0318 - 8562

8/21/74

NASA-RI STS OH25A

V418-83A

AEDC(ARO,INC.) ARNOLD AFS, TENNESSEE
VON KARMAN GAS DYNAMICS FACILITY
50 INCH HYPERSONIC TUNNEL B

GROUP	CONFIG	MODEL	MACH NO	PO(PSIA)	TO(DEG R)	ALPHA-MODEL	ALPHA-SECTOR	ALPHA-PREBEND	ROLL-MODEL	YAW
47	4	LEADING EDGE	7.98	432.2	1312	30.01	-.01	30.00	180.00	-.00

T-INF (DEG R)	P-INF (PSIA)	Q-INF (PSIA)	V-INF (FT/SEC)	RHO-INF (SLUGS/FT3)	MU-INF (LB-SEC/FT2)	RE/FT (FT-1)	HREF (R= .0175FT)	STREF (R= .0175FT)
95.5	.045	2.006	3821	3.953E-05	7.689E-08	1.964E 06	3.484E-02	2.902E-02

CAMERA	ROLL NO	PAINT TEMP (DEG F)	INITIAL TEMP (DEG F)	SQUARE ROOT (RHOXCXK)	TBAR(TO)	BETA(TO)
TOP(T)	318	225	81	.0528	0	0

	PIC NO	TIME	DELTIME	H(TO)	H(TO)/HREF	H(.9TO)	H(.9TO)/HREF	H(.867TO)	H(.867TO)/HREF	ST(TO)
T	8559(225)	.03		MODEL HAS NOT REACHED CENTERLINE						
T	8560(225)	1.00		MODEL HAS NOT REACHED CENTERLINE						
T	8561(225)	2.03		MODEL HAS NOT REACHED CENTERLINE						
INJECT TIME =		2.30								
T	8562(225)	3.05	1.76	7.751E-03	.2226	9.705E-03	.2786	1.059E-02	.3039	6.371E-03
T	8563(225)	4.10	2.81	6.134E-03	.1760	7.680E-03	.2204	8.377E-03	.2404	5.037E-03
T	8564(225)	5.16	3.86	5.233E-03	.1502	6.552E-03	.1880	7.147E-03	.2051	4.297E-03
T	8565(225)	6.21	4.91	4.640E-03	.1332	5.809E-03	.1668	6.337E-03	.1819	3.812E-03
T	8566(225)	7.23	5.94	4.220E-03	.1211	5.284E-03	.1516	5.763E-03	.1654	3.466E-03
T	8567(225)	8.28	6.99	3.890E-03	.1116	4.870E-03	.1397	5.312E-03	.1524	3.193E-03
T	8568(225)	9.34	8.04	3.627E-03	.1040	4.541E-03	.1303	4.953E-03	.1421	2.976E-03
T	8569(225)	10.39	9.09	3.411E-03	.0979	4.270E-03	.1226	4.658E-03	.1337	2.801E-03
T	8570(225)	11.44	10.15	3.229E-03	.0927	4.043E-03	.1160	4.410E-03	.1265	2.650E-03
T	8571(225)	12.49	11.20	3.074E-03	.0882	3.849E-03	.1104	4.198E-03	.1204	2.522E-03
T	8572(225)	13.52	12.22	2.942E-03	.0844	3.684E-03	.1057	4.018E-03	.1152	2.413E-03
T	8573(225)	14.59	13.30	2.821E-03	.0809	3.531E-03	.1013	3.852E-03	.1105	2.315E-03
T	8574(225)	15.62	14.33	2.718E-03	.0779	3.403E-03	.0976	3.711E-03	.1065	2.229E-03
T	8575(225)	16.67	15.38	2.623E-03	.0753	3.284E-03	.0942	3.582E-03	.1028	2.153E-03
T	8576(225)	17.72	16.43	2.538E-03	.0729	3.177E-03	.0911	3.466E-03	.0994	2.082E-03
T	8577(225)	18.77	17.48	2.460E-03	.0706	3.080E-03	.0884	3.360E-03	.0964	2.019E-03
T	8578(225)	19.82	18.53	2.389E-03	.0685	2.992E-03	.0858	3.263E-03	.0936	1.960E-03
T	8579(225)	20.85	19.56	2.326E-03	.0667	2.912E-03	.0835	3.176E-03	.0911	1.907E-03
T	8580(225)	21.90	20.61	2.266E-03	.0650	2.837E-03	.0814	3.094E-03	.0887	1.858E-03
T	8581(225)	22.95	21.66	2.210E-03	.0634	2.767E-03	.0794	3.015E-03	.0866	1.812E-03
T	8582(225)	24.00	22.71	2.158E-03	.0619	2.702E-03	.0775	2.948E-03	.0845	1.769E-03
T	8583(225)	25.05	23.76	2.110E-03	.0605	2.642E-03	.0757	2.882E-03	.0826	1.729E-03

```
                                        ****************
                                        * UNCLASSIFIED *
                                        ****************
                                              8/21/74

NASA-RI STS OH25A                    AEDC(ARO,INC.) ARNOLD AFS, TENNESSEE
                                      VON KARMAN GAS DYNAMICS FACILITY
V418-83A                                 50 INCH HYPERSONIC TUNNEL B

GROUP  CONFIG    MODEL      MACH NO    PO(PSIA)  TO(DEG R)  ALPHA-MODEL  ALPHA-SECTOR  ALPHA-PREBEND  ROLL-MODEL  YAW
  47      4   LEADING EDGE    7.98      433.3      1312        30.01         -.01          30.00        180.00      -.00

 T-INF    P-INF    Q-INF    V-INF      RHO-INF       MU-INF        RE/FT       HREF          STREF
(DEG R)  (PSIA)   (PSIA)   (FT/SEC)   (SLUGS/FT3)   (LB-SEC/FT2)   (FT-1)     (R= .0175FT)   (R= .0175FT)
 95.5      .045    2.011    3821      3.964E-05     7.687E-08    1.970E 06   3.488E-02     2.898E-02

CAMERA        ROLL NO  PAINT TEMP (DEG F)   INITIAL TEMP (DEG F)   SQUARE ROOT (RHOXCXK)    TBAR(TO)   BETA(TO)
TOP(T)          318
                          225                  81                  .0528                    1.868E-01  1.9481E-01

   PIC NO      TIME DELTIME      H(TO)       H(TO)/HREF   H(.9TO)     H(.9TO)/HREF H( .867TO)  H( .867TO)/HREF  ST(TO)
T  8584(225) 26.11  24.81      2.065E-03      .0592      2.585E-03      .0741       2.820E-03      .0809       1.692E-03
T  8585(225) 27.16  25.86      2.023E-03      .0580      2.532E-03      .0726       2.762E-03      .0792       1.658E-03
             27.61             MODEL HAS LEFT CENTERLINE
T  8586(225) 28.18  26.69      1.984E-03      .0569      2.483E-03      .0712       2.709E-03      .0777       1.626E-03
      ERROR IN POWRF  BASE<0      A = 6001000064653215 CALL FROM 72651
```

GROUP 48

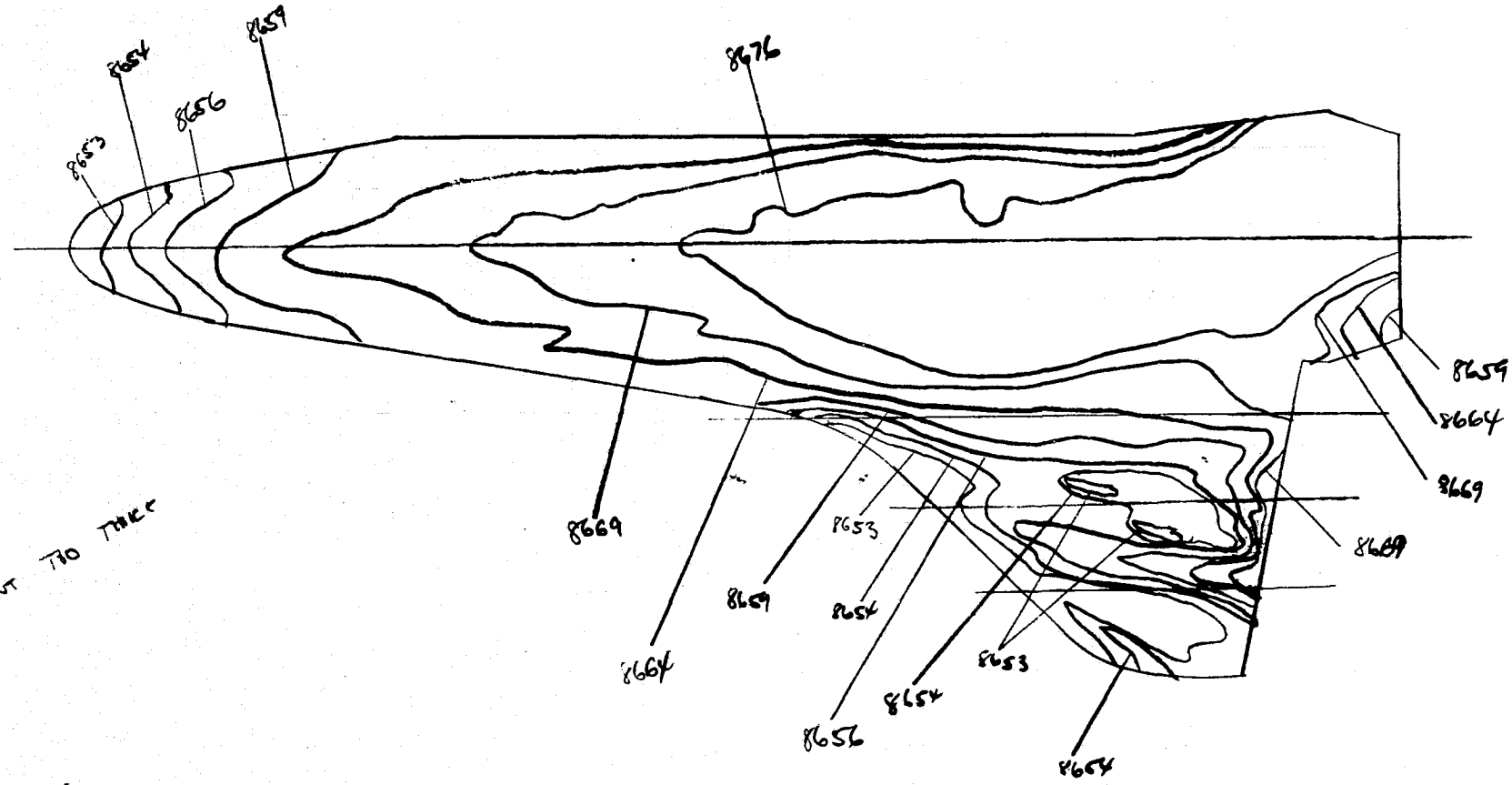

PAINT TOO THICK

8/21/74

NASA-RI STS CH25A

V41R-83A

AEDC(ARO,INC.) ARNOLD AFS, TENNESSEE
VON KARMAN GAS DYNAMICS FACILITY
50 INCH HYPERSONIC TUNNEL B

GROUP	CONFIG	MODEL	MACH NO	PO(PSIA)	TO(DEG R)	ALPHA-MODEL	ALPHA-SECTOR	ALPHA-PREBEND	ROLL-MODEL	YAW
48	3	BODY FLUSH	7.98	432.4	1307	30.01	-.01	30.00	180.00	-.00

T-INF (DEG R)	P-INF (PSIA)	Q-INF (PSIA)	V-INF (FT/SEC)	RHO-INF (SLUGS/FT3)	MU-INF (LB-SEC/FT2)	RE/FT (FT-1)	HREF (R= .0175FT)	STREF (R= .0175FT)
95.2	.045	2.007	3815	3.969E-05	7.662E-08	1.976E 06	3.482E-02	2.895E-02

CAMERA	ROLL NO	PAINT TEMP (DEG F)	INITIAL TEMP (DEG F)	SQUARE ROOT (RHOXCXK)	TBAR(TO)	BETA(TO)
TOP(T)	376	225	82	.0528	0	0

	PIC NO	TIME	DELTIME	H(TO)	H(TO)/HREF	H(.9TO)	H(.9TO)/HREF	H(.867TO)	H(.867TO)/HREF	ST(TO)
T	8650(225)	.03		MODEL HAS NOT REACHED CENTERLINE						
T	8651(225)	1.00		MODEL HAS NOT REACHED CENTERLINE						
T	8652(225)	2.03		MODEL HAS NOT REACHED CENTERLINE						
INJECT TIME =		2.30								
T	8653(225)	3.05	1.76	7.756E-03	.2226	9.721E-03	.2790	1.061E-02	.3044	6.350E-03
T	8654(225)	4.10	2.81	6.137E-03	.1761	7.692E-03	.2207	8.395E-03	.2408	5.022E-03
T	8655(225)	5.16	3.86	5.236E-03	.1502	6.563E-03	.1883	7.162E-03	.2055	4.284E-03
T	8656(225)	6.21	4.91	4.643E-03	.1332	5.819E-03	.1669	6.350E-03	.1821	3.797E-03
T	8657(225)	7.26	5.97	4.214E-03	.1209	5.281E-03	.1516	5.764E-03	.1654	3.450E-03
T	8658(225)	8.31	7.02	3.885E-03	.1115	4.870E-03	.1397	5.314E-03	.1525	3.179E-03
T	8659(225)	9.36	8.07	3.623E-03	.1039	4.541E-03	.1302	4.956E-03	.1421	2.962E-03
T	8660(225)	10.41	9.12	3.408E-03	.0978	4.272E-03	.1225	4.662E-03	.1337	2.788E-03
T	8661(225)	11.46	10.17	3.227E-03	.0926	4.045E-03	.1160	4.414E-03	.1266	2.640E-03
T	8662(225)	12.51	11.22	3.072E-03	.0881	3.851E-03	.1104	4.202E-03	.1205	2.512E-03
T	8663(225)	13.57	12.27	2.938E-03	.0843	3.682E-03	.1056	4.018E-03	.1153	2.403E-03
T	8664(225)	14.62	13.32	2.820E-03	.0808	3.534E-03	.1013	3.857E-03	.1106	2.305E-03
T	8665(225)	15.64	14.35	2.717E-03	.0779	3.405E-03	.0977	3.716E-03	.1066	2.222E-03
T	8666(225)	16.69	15.40	2.622E-03	.0752	3.287E-03	.0943	3.587E-03	.1029	2.146E-03
T	8667(225)	17.75	16.45	2.537E-03	.0728	3.180E-03	.0912	3.471E-03	.0995	2.075E-03
T	8668(225)	18.80	17.50	2.460E-03	.0706	3.083E-03	.0884	3.365E-03	.0965	2.012E-03
T	8669(225)	19.85	18.56	2.389E-03	.0686	2.995E-03	.0859	3.268E-03	.0938	1.956E-03
T	8670(225)	20.90	19.61	2.324E-03	.0667	2.913E-03	.0835	3.179E-03	.0912	1.900E-03
T	8671(225)	21.98	20.68	2.263E-03	.0649	2.836E-03	.0813	3.095E-03	.0888	1.850E-03
T	8672(225)	23.00	21.71	2.208E-03	.0633	2.769E-03	.0794	3.021E-03	.0866	1.805E-03
T	8673(225)	24.05	22.76	2.157E-03	.0619	2.704E-03	.0775	2.951E-03	.0846	1.764E-03
T	8674(225)	25.10	23.81	2.109E-03	.0605	2.643E-03	.0758	2.885E-03	.0827	1.724E-03

```
                                        ****************
                                        * UNCLASSIFIED *
                                        ****************
                                              8/21/74

NASA-RI STS OH25A                    AEDC(ARO,INC.) ARNOLD AFS, TENNESSEE
                                      VON KARMAN GAS DYNAMICS FACILITY
V418-83A                                 50 INCH HYPERSONIC TUNNEL B

GROUP  CONFIG    MODEL      MACH NO    PO(PSIA)  TO(DEG R)  ALPHA-MODEL  ALPHA-SECTOR  ALPHA-PREBEND  ROLL-MODEL  YAW
  49      3    BODY FLUSH     7.98      433.7      1307        30.01         -.01         30.00        180.00      -.00

 T-INF    P-INF    Q-INF    V-INF     RHO-INF      MU-INF        RE/FT      HREF          STREF
(DEG R)  (PSIA)   (PSIA)   (FT/SEC)  (SLUGS/FT3)  (LB-SEC/FT2)  (FT-1)    (R= .0175FT)  (R= .0175FT)
 95.1      .045    2.013    3814     3.982E-05    7.660E-08   1.983E 06   3.487E-02     2.890E-02

CAMERA        ROLL NO  PAINT TEMP (DEG F)   INITIAL TEMP (DEG F)   SQUARE ROOT (RHOXCXK)    TBAR(TO)   BETA(TO)
TOP(T)          376
                            225                  82                  .0529                  1.869E-01  1.9492E-01

    PIC NO      TIME DELTIME      H(TO)      H(TO)/HREF   H(.9TO)    H(.9TO)/HREF H( .867TO)  H( .867TO)/HREF  ST(TO)
T  8675(225) 26.16  24.86      2.064E-03     .0592     2.587E-03     .0742      2.823E-03      .0810      1.687E-03
T  8676(225) 27.21  25.91      2.022E-03     .0580     2.534E-03     .0727      2.765E-03      .0793      1.652E-03
T  8677(225) 28.26  26.96      1.982E-03     .0568     2.484E-03     .0712      2.711E-03      .0777      1.620E-03
             28.78            MODEL HAS LEFT CENTERLINE
T  8678(225) 29.31  28.02      1.944E-03     .0558     2.437E-03     .0699      2.660E-03      .0763      1.590E-03
T  8679(225) 30.36  29.07      1.909E-03     .0547     2.393E-03     .0686      2.611E-03      .0749      1.560E-03
       ERROR IN POWRF  BASE<0      A = 6001242214734237 CALL FROM 72651
```

GROUP 49
0376 - 8683

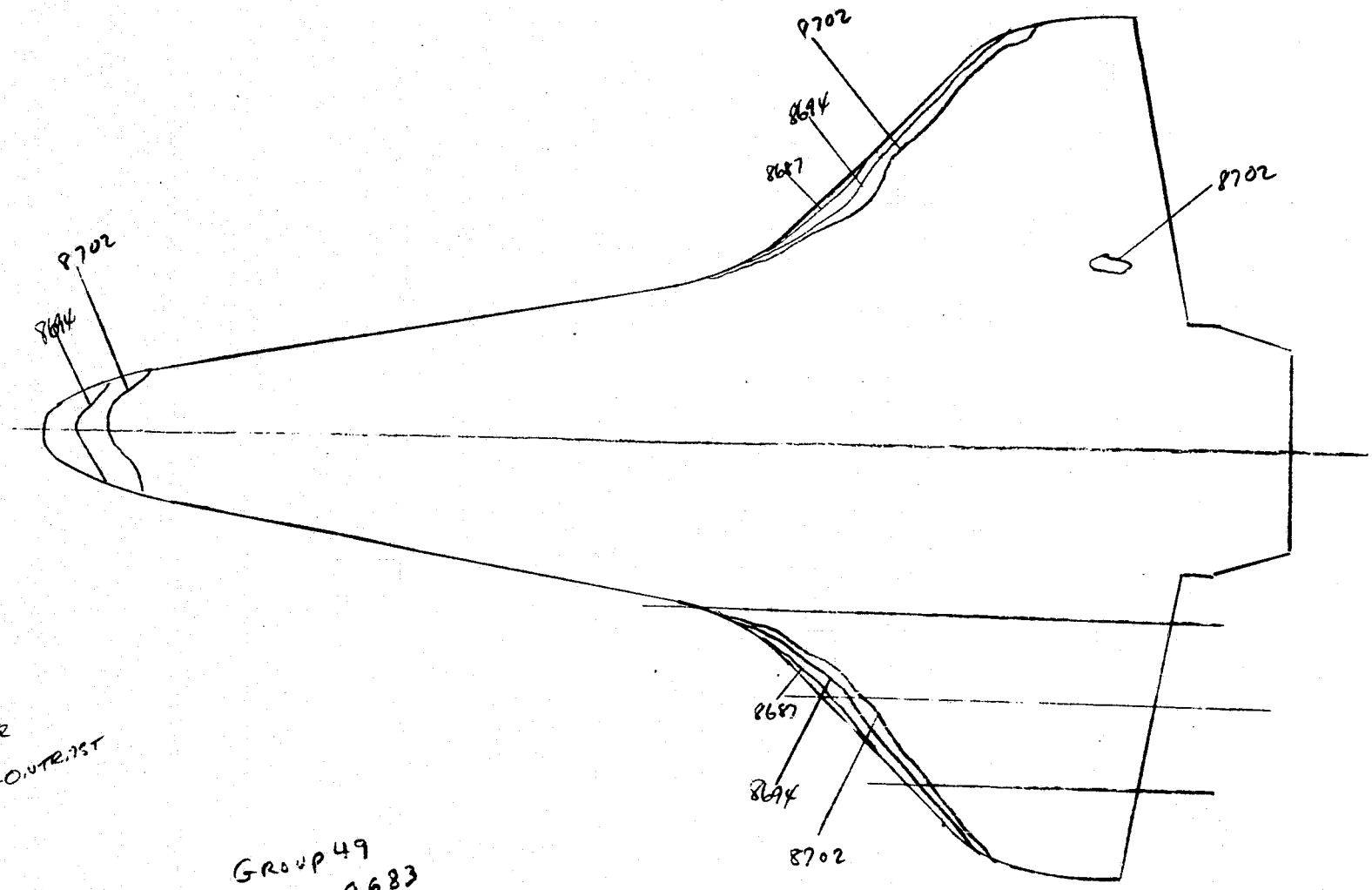

POOR
CONTRAST

GROUP 49
0376- 8683

8/21/74

NASA-RI STS OH25A

V418-83A

AEDC(ARO,INC.) ARNOLD AFS, TENNESSEE
VON KARMAN GAS DYNAMICS FACILITY
50 INCH HYPERSONIC TUNNEL B

GROUP	CONFIG	MODEL	MACH NO	PO(PSIA)	TO(DEG R)	ALPHA-MODEL	ALPHA-SECTOR	ALPHA-PREBEND	ROLL-MODEL	YAW
49	1	ORBITER	7.98	430.9	1301	40.03	-10.03	30.00	180.00	-.00

T-INF (DEG R)	P-INF (PSIA)	Q-INF (PSIA)	V-INF (FT/SEC)	RHO-INF (SLUGS/FT3)	MU-INF (LB-SEC/FT2)	RE/FT (FT-1)	HREF (R= .0175FT)	STREF (R= .0175FT)
94.7	.045	2.000	3805	3.975E-05	7.623E-08	1.984E 06	3.473E-02	2.891E-02

CAMERA	ROLL NO	PAINT TEMP (DEG F)	INITIAL TEMP (DEG F)	SQUARE ROOT (RHOXCXK)	TRAR(TO)	BETA(TO)
TOP(T)	376	400	84	.0555	0	0

	PIC NO	TIME	DELTIME	H(TO)	H(TO)/HREF	H(.9TO)	H(.9TO)/HREF	H(.867TO)	H(.867TO)/HREF	ST(TO)
T	8680(400)	.03		MODEL HAS NOT REACHED CENTERLINE						
T	8681(400)	1.00		MODEL HAS NOT REACHED CENTERLINE						
T	8682(400)	2.03		MODEL HAS NOT REACHED CENTERLINE						
INJECT TIME =		2.30								
T	8683(400)	3.08	1.79	2.361E-02	.6799	3.248E-02	.9351	3.714E-02	1.0694	1.921E-02
T	8684(400)	4.10	2.81	1.882E-02	.5417	2.588E-02	.7450	2.960E-02	.8520	1.530E-02
T	8685(400)	5.16	3.86	1.605E-02	.4622	2.208E-02	.6358	2.525E-02	.7271	1.306E-02
T	8686(400)	6.21	4.91	1.423E-02	.4098	1.958E-02	.5636	2.239E-02	.6445	1.157E-02
T	8687(400)	7.26	5.97	1.292E-02	.3719	1.777E-02	.5116	2.032E-02	.5850	1.051E-02
T	8688(400)	8.31	7.02	1.191E-02	.3430	1.638E-02	.4718	1.874E-02	.5395	9.689E-03
T	8689(400)	9.36	8.07	1.111E-02	.3199	1.528E-02	.4400	1.747E-02	.5032	9.038E-03
T	8690(400)	10.41	9.12	1.045E-02	.3009	1.437E-02	.4139	1.643E-02	.4733	8.501E-03
T	8691(400)	11.46	10.17	9.894E-03	.2849	1.361E-02	.3918	1.556E-02	.4481	8.046E-03
T	8692(400)	12.51	11.22	9.419E-03	.2713	1.296E-02	.3731	1.482E-02	.4267	7.663E-03
T	8693(400)	13.57	12.27	9.007E-03	.2593	1.239E-02	.3567	1.417E-02	.4079	7.326E-03
T	8694(400)	14.62	13.32	8.644E-03	.2489	1.189E-02	.3424	1.360E-02	.3915	7.033E-03
T	8695(400)	15.67	14.38	8.322E-03	.2397	1.145E-02	.3296	1.309E-02	.3770	6.771E-03
T	8696(400)	16.72	15.43	8.033E-03	.2313	1.105E-02	.3181	1.264E-02	.3638	6.531E-03
T	8697(400)	17.77	16.48	7.773E-03	.2238	1.069E-02	.3078	1.223E-02	.3520	6.321E-03
T	8698(400)	18.80	17.50	7.542E-03	.2172	1.037E-02	.2987	1.186E-02	.3416	6.135E-03
T	8699(400)	19.85	18.56	7.325E-03	.2110	1.007E-02	.2902	1.152E-02	.3318	5.961E-03
T	8700(400)	20.90	19.61	7.126E-03	.2052	9.801E-03	.2822	1.121E-02	.3227	5.796E-03
T	8701(400)	21.95	20.66	6.942E-03	.1999	9.548E-03	.2749	1.092E-02	.3144	5.646E-03
T	8702(400)	23.00	21.71	6.772E-03	.1950	9.314E-03	.2681	1.065E-02	.3066	5.506E-03
T	8703(400)	24.05	22.76	6.614E-03	.1905	9.097E-03	.2620	1.040E-02	.2996	5.382E-03
T	8704(400)	25.13	23.84	6.463E-03	.1861	8.889E-03	.2560	1.017E-02	.2927	5.257E-03

```
                                    ****************
                                    * UNCLASSIFIED *
                                    ****************
                                        8/21/74

NASA-RI STS OH25A                  AEDC(ARO,INC.) ARNOLD AFS, TENNESSEE
                                    VON KARMAN GAS DYNAMICS FACILITY
V41B-83A                              50 INCH HYPERSONIC TUNNEL B

GROUP  CONFIG    MODEL      MACH NO    PO(PSIA)  TO(DEG R)  ALPHA-MODEL  ALPHA-SECTOR  ALPHA-PREBEND  ROLL-MODEL  YAW
  49      1    ORBITER        7.98      430.8      1300        40.03       -10.03         30.00        180.00      -.00

 T-INF    P-INF   Q-INF   V-INF     RHO-INF      MU-INF        RE/FT      HREF          STREF
(DEG R)  (PSIA)  (PSIA)  (FT/SEC)  (SLUGS/FT3)  (LB-SEC/FT2)  (FT-1)     (R= .0175FT)  (R= .0175FT)
 94.7     .045   1.999    3804     3.975E-05    7.621E-08   1.984E 06   3.473E-02     2.891E-02

CAMERA        ROLL NO  PAINT TEMP (DEG F)   INITIAL TEMP (DEG F)   SQUARE ROOT (RHOXCXK)   TBAR(TO)   BETA(TO)
TOP(T)          376
                          400                  84                   .0555                  4.178E-01  5.6851E-01

   PIC NO      TIME DELTIME      H(TO)      H(TO)/HREF   H(.9TO)    H(.9TO)/HREF H( .867TO)  H( .867TO)/HREF  ST(TO)
              26.03            MODEL HAS LEFT CENTERLINE
T  8705(400) 26.16  24.86      6.328E-03     .1822     8.704E-03     .2506       9.953E-03     .2866       5.149E-03
T  8706(400) 27.21  25.91      6.198E-03     .1785     8.525E-03     .2455       9.749E-03     .2808       5.044E-03
       ERROR IN POWRF  BASE<0      A = 6001242434215625 CALL FROM 72651
```

GROUP 50

0376-8710

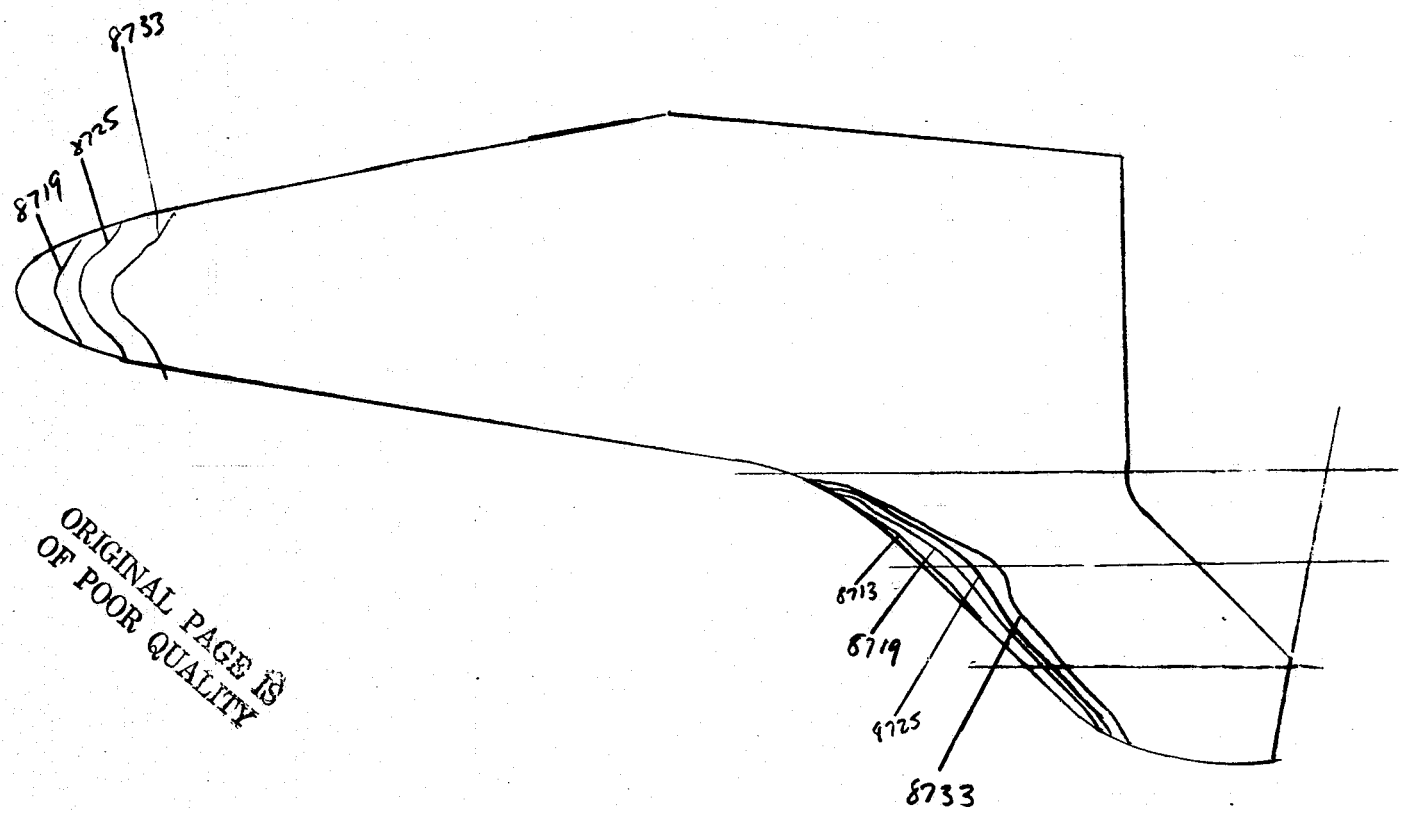

ORIGINAL PAGE IS
OF POOR QUALITY

8/21/74

NASA-RI STS OH25A

AEDC(ARO,INC.) ARNOLD AFS, TENNESSEE
VON KARMAN GAS DYNAMICS FACILITY
50 INCH HYPERSONIC TUNNEL B

V418-83A

GRCUP	CONFIG	MODEL	MACH NO	PO(PSIA)	TO(DEG R)	ALPHA-MODEL	ALPHA-SECTOR	ALPHA-PREBEND	ROLL-MODEL	YAW
50	4	LEADING EDGE	7.98	429.7	1301	40.05	-10.05	30.00	180.00	-.00

T-INF (DEG R)	P-INF (PSIA)	Q-INF (PSIA)	V-INF (FT/SEC)	RHO-INF (SLUGS/FT3)	MU-INF (LB-SEC/FT2)	RE/FT (FT-1)	HREF (R= .0175FT)	STREF (R= .0175FT)
94.7	.045	1.994	3806	3.963E-05	7.626E-08	1.978E 06	3.469E-02	2.896E-02

CAMERA TOP(T)	ROLL NO	PAINT TEMP (DEG F)	INITIAL TEMP (DEG F)	SQUARE ROOT (RHOXCXK)	TBAR(TO)	BETA(TO)
	376	400	86	.0555	0	0

	PIC NO	TIME	DELTIME	H(TO)	H(TO)/HREF	H(.9TO)	H(.9TO)/HREF	H(.867TO)	H(.867TO)/HREF	ST(TO)
T	8707(400)	0		MODEL HAS NOT REACHED CENTERLINE						
T	8708(400)	.98		MODEL HAS NOT REACHED CENTERLINE						
T	8709(400)	2.03		MODEL HAS NOT REACHED CENTERLINE						
INJECT TIME =		2.23								
T	8710(400)	3.05	1.80	2.333E-02	.6723	3.208E-02	.9243	3.668E-02	1.0570	1.901E-02
T	8711(400)	4.10	2.85	1.854E-02	.5344	2.549E-02	.7347	2.915E-02	.8402	1.511E-02
T	8712(400)	5.16	3.91	1.585E-02	.4566	2.179E-02	.6278	2.492E-02	.7179	1.291E-02
T	8713(400)	6.21	4.96	1.407E-02	.4054	1.935E-02	.5574	2.212E-02	.6373	1.146E-02
T	8714(400)	7.23	5.99	1.281E-02	.3689	1.761E-02	.5072	2.014E-02	.5800	1.043E-02
T	8715(400)	8.28	7.03	1.181E-02	.3402	1.624E-02	.4678	1.857E-02	.5349	9.619E-03
T	8716(400)	9.34	8.09	1.102E-02	.3174	1.515E-02	.4363	1.732E-02	.4989	8.972E-03
T	8717(400)	10.39	9.14	1.036E-02	.2985	1.425E-02	.4105	1.629E-02	.4694	8.440E-03
T	8718(400)	11.44	10.19	9.815E-03	.2827	1.349E-02	.3886	1.543E-02	.4444	7.989E-03
T	8719(400)	12.49	11.24	9.345E-03	.2691	1.285E-02	.3700	1.469E-02	.4231	7.608E-03
T	8720(400)	13.54	12.29	8.936E-03	.2573	1.229E-02	.3537	1.405E-02	.4045	7.268E-03
T	8721(400)	14.59	13.34	8.577E-03	.2470	1.179E-02	.3396	1.348E-02	.3884	6.983E-03
T	8722(400)	15.64	14.39	8.258E-03	.2377	1.135E-02	.3269	1.298E-02	.3737	6.717E-03
T	8723(400)	16.69	15.44	7.972E-03	.2295	1.096E-02	.3156	1.253E-02	.3609	6.485E-03
T	8724(400)	17.75	16.49	7.713E-03	.2220	1.060E-02	.3053	1.213E-02	.3491	6.273E-03
T	8725(400)	18.80	17.55	7.479E-03	.2153	1.028E-02	.2961	1.176E-02	.3385	6.085E-03
T	8726(400)	19.85	18.60	7.264E-03	.2091	9.988E-03	.2875	1.142E-02	.3288	5.908E-03
T	8727(400)	20.90	19.65	7.067E-03	.2035	9.717E-03	.2797	1.111E-02	.3199	5.749E-03
T	8728(400)	21.95	20.70	6.886E-03	.1982	9.467E-03	.2725	1.083E-02	.3116	5.600E-03
T	8729(400)	23.00	21.75	6.717E-03	.1933	9.235E-03	.2658	1.056E-02	.3039	5.461E-03
T	8730(400)	24.05	22.80	6.560E-03	.1888	9.020E-03	.2596	1.031E-02	.2968	5.333E-03
T	8731(400)	25.10	23.85	6.414E-03	.1846	8.819E-03	.2538	1.008E-02	.2902	5.215E-03

```
                                        ****************
                                        * UNCLASSIFIED *
                                        ****************
                                            8/21/74

NASA-RI STS OH25A                    AEDC(ARO,INC.) ARNOLD AFS, TENNESSEE
                                      VON KARMAN GAS DYNAMICS FACILITY
V41B-83A                                 50 INCH HYPERSONIC TUNNEL B

GROUP  CONFIG    MODEL      MACH NO    PO(PSIA)  TO(DEG R)  ALPHA-MODEL  ALPHA-SECTOR  ALPHA-PREBEND  ROLL-MODEL  YAW
  50      4   LEADING EDGE    7.98      431.1      1301        40.05       -10.05         30.00        180.00      -.00

 T-INF    P-INF    Q-INF    V-INF     RHO-INF      MU-INF        RE/FT       HREF          STREF
(DEG R)  (PSIA)   (PSIA)   (FT/SEC)  (SLUGS/FT3)  (LB-SEC/FT2)  (FT-1)     (R= .0175FT)  (R= .0175FT)
 94.7      .045    2.001    3806     3.976E-05    7.626E-08   1.984E 06   3.474E-02     2.891E-02

CAMERA        ROLL NO  PAINT TEMP (DEG F)   INITIAL TEMP (DEG F)   SQUARE ROOT (RHOXCXK)    TBAR(TO)   BETA(TO)
TOP(T)          376
                            400                  86                  .0555                   4.159E-01  5.6445E-01

   PIC NO      TIME DELTIME      H(TO)      H(TO)/HREF   H(.9TO)    H(.9TO)/HREF H( .867TO)  H( .867TO)/HREF  ST(TO)
T  8732(400) 26.16  24.90      6.277E-03     .1806     8.631E-03     .2484       9.869E-03      .2840       5.102E-03
             26.51            MODEL HAS LEFT CENTERLINE
T  8733(400) 27.21  25.96      6.149E-03     .1770     8.454E-03     .2433       9.667E-03      .2782       4.998E-03
T  8734(400) 28.26  27.01      6.028E-03     .1735     8.288E-03     .2385       9.477E-03      .2727       4.899E-03
      ERROR IN POWRF  BASE<0      A = 6001242214734237 CALL FROM 72651
```

GROUP 51
0376 - 8738

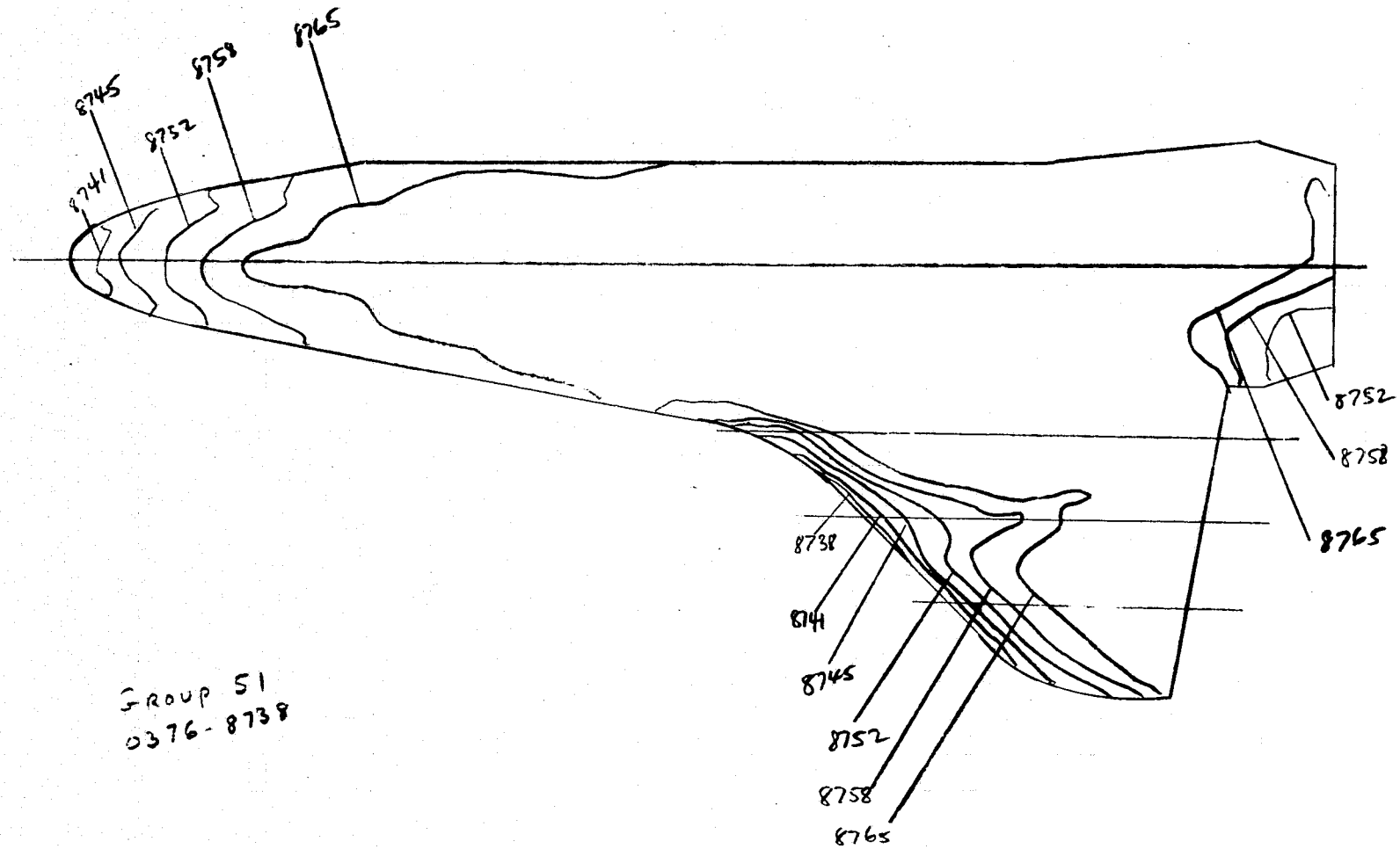

GROUP 51
0376-8738

8/21/74

NASA-RI STS OH25A

V41R-83A

AEDC(ARO,INC.) ARNOLD AFS, TENNESSEE
VON KARMAN GAS DYNAMICS FACILITY
50 INCH HYPERSONIC TUNNEL B

GROUP	CONFIG	MODEL	MACH NO	PO(PSIA)	TO(DEG R)	ALPHA-MODEL	ALPHA-SECTOR	ALPHA-PREBEND	ROLL-MODEL	YAW
51	3	BODY FLUSH	7.98	430.7	1302	40.03	-10.03	30.00	180.00	-.00

T-INF (DEG R)	P-INF (PSIA)	Q-INF (PSIA)	V-INF (FT/SEC)	RHO-INF (SLUGS/FT3)	MU-INF (LB-SEC/FT2)	RE/FT (FT-1)	HREF (R= .0175FT)	STREF (R= .0175FT)
94.8	.045	1.999	3807	3.969E-05	7.631E-08	1.980E 06	3.473E-02	2.894E-02

CAMERA TOP(T)	ROLL NO	PAINT TEMP (DEG F)	INITIAL TEMP (DEG F)	SQUARE ROOT (RHOXCXK)	TRAR(TO)	BETA(TO)
	376	350	86	.0550	0	0

	PIC NO	TIME	DELTIME	H(TO)	H(TO)/HREF	H(.9TO)	H(.9TO)/HREF	H(.867TO)	H(.867TO)/HREF	ST(TO)
T	8735(350)	.03		MODEL HAS NOT REACHED CENTERLINE						
T	8736(350)	1.00		MODEL HAS NOT REACHED CENTERLINE						
T	8737(350)	2.03		MODEL HAS NOT REACHED CENTERLINE						
INJECT TIME =		2.25								
T	8738(350)	3.05	1.79	1.788E-02	.5147	2.374E-02	.6836	2.665E-02	.7673	1.459E-02
T	8739(350)	4.10	2.84	1.419E-02	.4084	1.884E-02	.5424	2.115E-02	.6088	1.157E-02
T	8740(350)	5.16	3.89	1.212E-02	.3488	1.610E-02	.4632	1.807E-02	.5199	9.879E-03
T	8741(350)	6.21	4.94	1.075E-02	.3096	1.428E-02	.4111	1.603E-02	.4615	8.772E-03
T	8742(350)	7.26	5.99	9.766E-03	.2810	1.297E-02	.3732	1.456E-02	.4189	7.960E-03
T	8743(350)	8.31	7.04	9.008E-03	.2593	1.196E-02	.3443	1.343E-02	.3865	7.346E-03
T	8744(350)	9.36	8.10	8.403E-03	.2418	1.116E-02	.3211	1.253E-02	.3604	6.850E-03
T	8745(350)	10.39	9.12	7.916E-03	.2278	1.051E-02	.3025	1.180E-02	.3396	6.453E-03
T	8746(350)	11.44	10.17	7.496E-03	.2156	9.956E-03	.2864	1.118E-02	.3214	6.106E-03
T	8747(350)	12.49	11.22	7.137E-03	.2053	9.478E-03	.2727	1.064E-02	.3061	5.816E-03
T	8748(350)	13.54	12.29	6.824E-03	.1963	9.064E-03	.2607	1.017E-02	.2927	5.560E-03
T	8749(350)	14.59	13.33	6.550E-03	.1884	8.699E-03	.2503	9.764E-03	.2809	5.339E-03
T	8750(350)	15.64	14.38	6.306E-03	.1813	8.375E-03	.2408	9.401E-03	.2703	5.135E-03
T	8751(350)	16.69	15.43	6.087E-03	.1751	8.084E-03	.2325	9.075E-03	.2610	4.957E-03
T	8752(350)	17.75	16.48	5.890E-03	.1694	7.822E-03	.2250	8.781E-03	.2525	4.798E-03
T	8753(350)	18.77	17.51	5.715E-03	.1643	7.590E-03	.2182	8.519E-03	.2449	4.651E-03
T	8754(350)	19.82	18.56	5.550E-03	.1596	7.372E-03	.2120	8.275E-03	.2380	4.522E-03
T	8755(350)	20.87	19.61	5.399E-03	.1552	7.171E-03	.2061	8.050E-03	.2314	4.394E-03
T	8756(350)	21.93	20.66	5.200E-03	.1512	6.986E-03	.2009	7.842E-03	.2255	4.282E-03
T	8757(350)	22.98	21.71	5.131E-03	.1476	6.815E-03	.1960	7.650E-03	.2200	4.180E-03
T	8758(350)	24.03	22.76	5.012E-03	.1441	6.656E-03	.1913	7.471E-03	.2148	4.078E-03
T	8759(350)	25.08	23.81	4.900E-03	.1409	6.507E-03	.1871	7.305E-03	.2100	3.988E-03

****
* UNCLASSIFIED *
****

8/21/74

NASA-RI STS OH25A

AEDC(ARO,INC.) ARNOLD AFS, TENNESSEE
VON KARMAN GAS DYNAMICS FACILITY
50 INCH HYPERSONIC TUNNEL A

V41B-83A

GROUP	CONFIG	MODEL	MACH NO	PO(PSIA)	TO(DEG R)	ALPHA-MODEL	ALPHA-SECTOR	ALPHA-PREHEND	ROLL-MODEL	YAW
51	3	BODY FLUSH	7.98	431.9	1302	40.03	-10.03	30.00	180.00	-.00

T-INF (DEG R)	P-INF (PSIA)	Q-INF (PSIA)	V-INF (FT/SEC)	RHO-INF (SLUGS/FT3)	MU-INF (LB-SEC/FT2)	RE/FT (FT-1)	HREF (R= .0175FT)	STREF (R= .0175FT)
94.8	.045	2.004	3807	3.980E-05	7.632E-08	1.985E 06	3.478E-02	2.890E-02

CAMERA	ROLL NO	PAINT TEMP (DEG F)	INITIAL TEMP (DEG F)	SQUARE ROOT (RHOXCXK)	TBAR(TO)	BETA(TO)
IOP(T)	376	350	86	.0550	3.493E-01	4.3473E-01

	PIC NO	TIME	DELTIME	H(TO)	H(TO)/HREF	H(.9TO)	H(.9TO)/HREF	H(.867TO)	H(.867TO)/HREF	ST(TO)
T	8760(350)	26.13	24.87	4.795E-03	.1378	6.368E-03	.1830	7.148E-03	.2055	3.901E-03
T	8761(350)	27.18	25.92	4.697E-03	.1350	6.238E-03	.1793	7.002E-03	.2012	3.821E-03
T	8762(350)	28.23	26.97	4.604E-03	.1323	6.115E-03	.1757	6.864E-03	.1973	3.745E-03
T	8763(350)	29.28	28.02	4.517E-03	.1298	5.999E-03	.1724	6.734E-03	.1935	3.674E-03
T	8764(350)	30.33	29.07	4.435E-03	.1274	5.890E-03	.1692	6.611E-03	.1900	3.606E-03
		31.24		MODEL HAS LEFT CENTERLINE						
T	8765(350)	31.39	30.12	4.357E-03	.1252	5.786E-03	.1663	6.495E-03	.1867	3.546E-03
T	8766(350)	32.44	31.17	4.283E-03	.1231	5.688E-03	.1635	6.384E-03	.1835	3.484E-03
T	8767(350)	33.49	32.22	4.212E-03	.1210	5.594E-03	.1608	6.279E-03	.1805	3.426E-03

ERROR IN POWRF BASE<0 A = 6001242214734237 CALL FROM 72651

GROUP 52
0376-8771

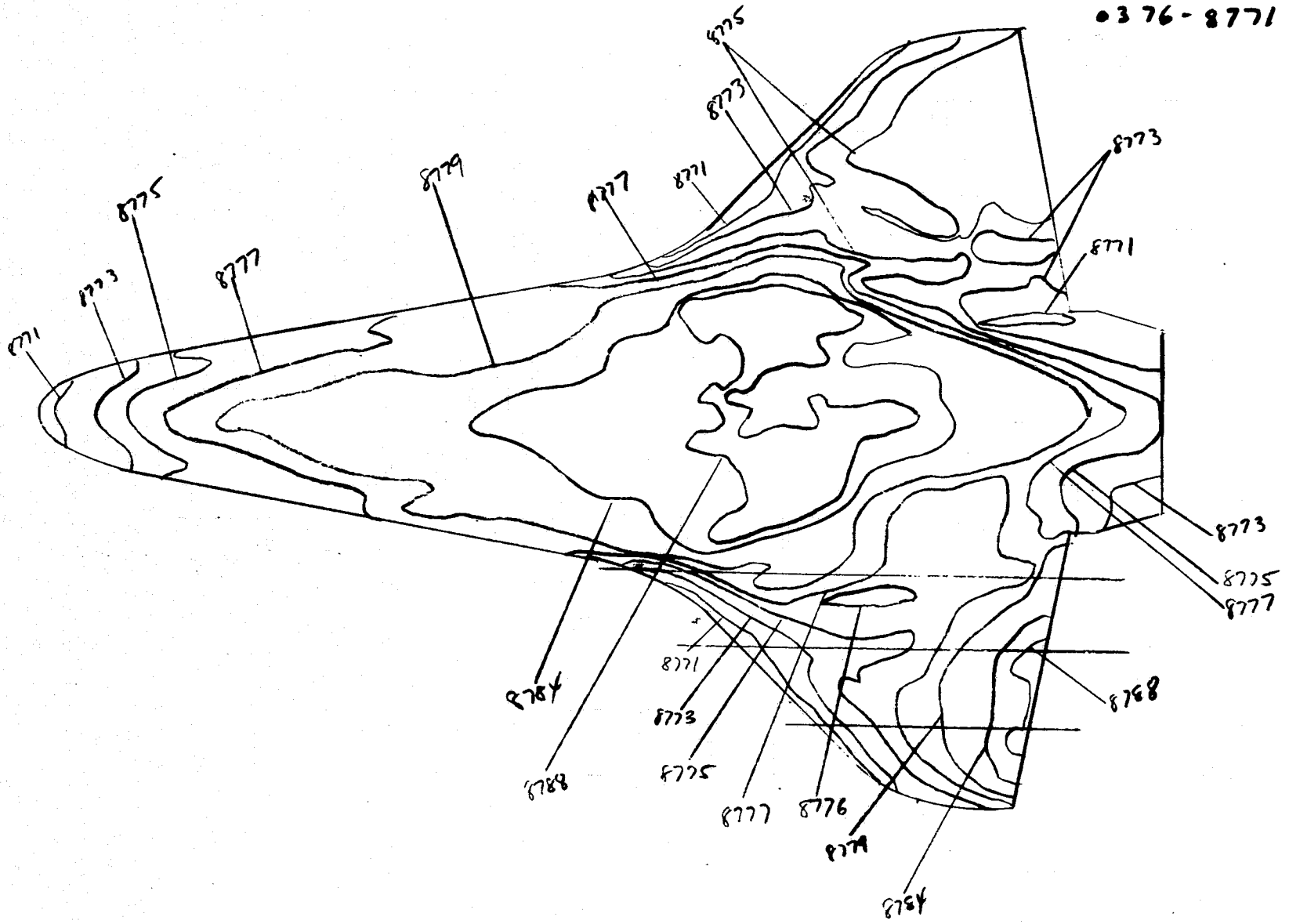

****
* UNCLASSIFIED *
****

8/21/74

NASA-RI STS OH25A

V418-83A

AEDC(ARO,INC.) ARNOLD AFS, TENNESSEE
VON KARMAN GAS DYNAMICS FACILITY
50 INCH HYPERSONIC TUNNEL R

GROUP	CONFIG	MODEL	MACH NO	PO(PSIA)	TO(DEG R)	ALPHA-MODEL	ALPHA-SECTOR	ALPHA-PREBEND	ROLL-MODEL	YAW
52	1	ORBITER	7.98	433.5	1306	40.03	-10.03	30.00	180.00	-.00

T-INF (DEG R)	P-INF (PSIA)	Q-INF (PSIA)	V-INF (FT/SEC)	RHO-INF (SLUGS/FT3)	MU-INF (LB-SEC/FT2)	RE/FT (FT-1)	HREF (R= .0175FT)	STREF (R= .0175FT)
95.1	.045	2.012	3813	3.982E-05	7.655E-08	1.984E 06	3.486E-02	2.890E-02

CAMERA	ROLL NO	PAINT TEMP (DEG F)	INITIAL TEMP (DEG F)	SQUARE ROOT (RHOXCXK)	TBAR(TO)	BETA(TO)
TOP(T)	376	250	88	.0535	0	0

	PIC NO	TIME	DELTIME	H(TO)	H(TO)/HREF	H(.9TO)	H(.9TO)/HREF	H(.867TO)	H(.867TO)/HREF	ST(TO)
T	8768(250)	0		MODEL HAS NOT REACHED CENTERLINE						
T	8769(250)	1.00		MODEL HAS NOT REACHED CENTERLINE						
T	8770(250)	2.03		MODEL HAS NOT REACHED CENTERLINE						
INJECT TIME =		2.30								
T	8771(250)	3.05	1.76	9.232E-03	.2648	1.168E-02	.3350	1.281E-02	.3673	7.535E-03
T	8772(250)	4.10	2.81	7.305E-03	.2095	9.244E-03	.2651	1.013E-02	.2906	5.963E-03
T	8773(250)	5.16	3.86	6.232E-03	.1788	7.886E-03	.2262	8.645E-03	.2480	5.088E-03
T	8774(250)	6.21	4.91	5.526E-03	.1585	6.992E-03	.2006	7.665E-03	.2199	4.514E-03
T	8775(250)	7.26	5.97	5.015E-03	.1439	6.346E-03	.1820	6.957E-03	.1995	4.095E-03
T	8776(250)	8.28	6.99	4.633E-03	.1329	5.862E-03	.1682	6.426E-03	.1843	3.782E-03
T	8777(250)	9.34	8.04	4.319E-03	.1239	5.466E-03	.1568	5.991E-03	.1719	3.527E-03
T	8778(250)	10.39	9.09	4.062E-03	.1165	5.140E-03	.1475	5.634E-03	.1617	3.318E-03
T	8779(250)	11.44	10.15	3.846E-03	.1103	4.867E-03	.1396	5.335E-03	.1530	3.140E-03
T	8780(250)	12.49	11.20	3.661E-03	.1050	4.632E-03	.1329	5.078E-03	.1457	2.990E-03
T	8781(250)	13.54	12.25	3.500E-03	.1004	4.429E-03	.1270	4.855E-03	.1393	2.858E-03
T	8782(250)	14.59	13.30	3.359E-03	.0964	4.251E-03	.1219	4.659E-03	.1337	2.743E-03
T	8783(250)	15.64	14.35	3.234E-03	.0928	4.092E-03	.1174	4.485E-03	.1287	2.641E-03
T	8784(250)	16.69	15.40	3.121E-03	.0895	3.950E-03	.1133	4.330E-03	.1242	2.549E-03
T	8785(250)	17.75	16.45	3.020E-03	.0866	3.822E-03	.1096	4.189E-03	.1201	2.465E-03
T	8786(250)	18.80	17.51	2.928E-03	.0840	3.705E-03	.1063	4.061E-03	.1165	2.391E-03
T	8787(250)	19.82	18.53	2.846E-03	.0816	3.601E-03	.1033	3.947E-03	.1132	2.324E-03
T	8788(250)	20.87	19.58	2.768E-03	.0794	3.503E-03	.1005	3.840E-03	.1102	2.260E-03
T	8789(250)	21.93	20.63	2.697E-03	.0774	3.413E-03	.0979	3.741E-03	.1073	2.203E-03
T	8790(250)	22.98	21.68	2.631E-03	.0755	3.329E-03	.0955	3.649E-03	.1047	2.148E-03
T	8791(250)	24.03	22.73	2.569E-03	.0737	3.251E-03	.0933	3.564E-03	.1022	2.098E-03
		24.65		MODEL HAS LEFT CENTERLINE						

****
* UNCLASSIFIED *
****

8/21/74

NASA-RI STS OH25A

V413-83A

AEDC(ARO,INC.) ARNOLD AFS, TENNESSEE
VON KARMAN GAS DYNAMICS FACILITY
50 INCH HYPERSONIC TUNNEL B

GROUP	CONFIG	MODEL	MACH NO	PO(PSIA)	TO(DEG R)	ALPHA-MODEL	ALPHA-SECTOR	ALPHA-PREBEND	ROLL-MODEL	YAW
52	1	ORBITER	7.98	433.4	1306	40.03	-10.03	30.00	180.00	-.00

T-INF (DEG R)	P-INF (PSIA)	Q-INF (PSIA)	V-INF (FT/SEC)	RHO-INF (SLUGS/FT3)	MU-INF (LB-SEC/FT2)	RE/FT (FT-1)	HREF (R= .0175FT)	STREF (R= .0175FT)
95.1	.045	2.011	3813	3.981E-05	7.657E-08	1.982E 06	3.486E-02	2.891E-02

CAMERA	ROLL NO	PAINT TEMP (DEG F)	INITIAL TEMP (DEG F)	SQUARE ROOT (RHOXCAK)	TBAR(TO)	BETA(TO)
TOP(T)	376					
		250	88	.0535	2.138E-01	2.2897E-01

	PIC NO	TIME	DELTIME	H(TO)	H(TO)/HREF	H(.9TO)	H(.9TO)/HREF	H(.867TO)	H(.867TO)/HREF	ST(TO)
T	8792(250)	25.08	23.79	2.512E-03	.0721	3.178E-03	.0912	3.484E-03	.1000	2.052E-03
T	8793(250)	26.13	24.84	2.458E-03	.0705	3.110E-03	.0892	3.409E-03	.0978	2.008E-03

ERROR IN POWRF BASE<0 A = 6001242434215625 CALL FROM 72651

GROUP 53
0376 - 8797

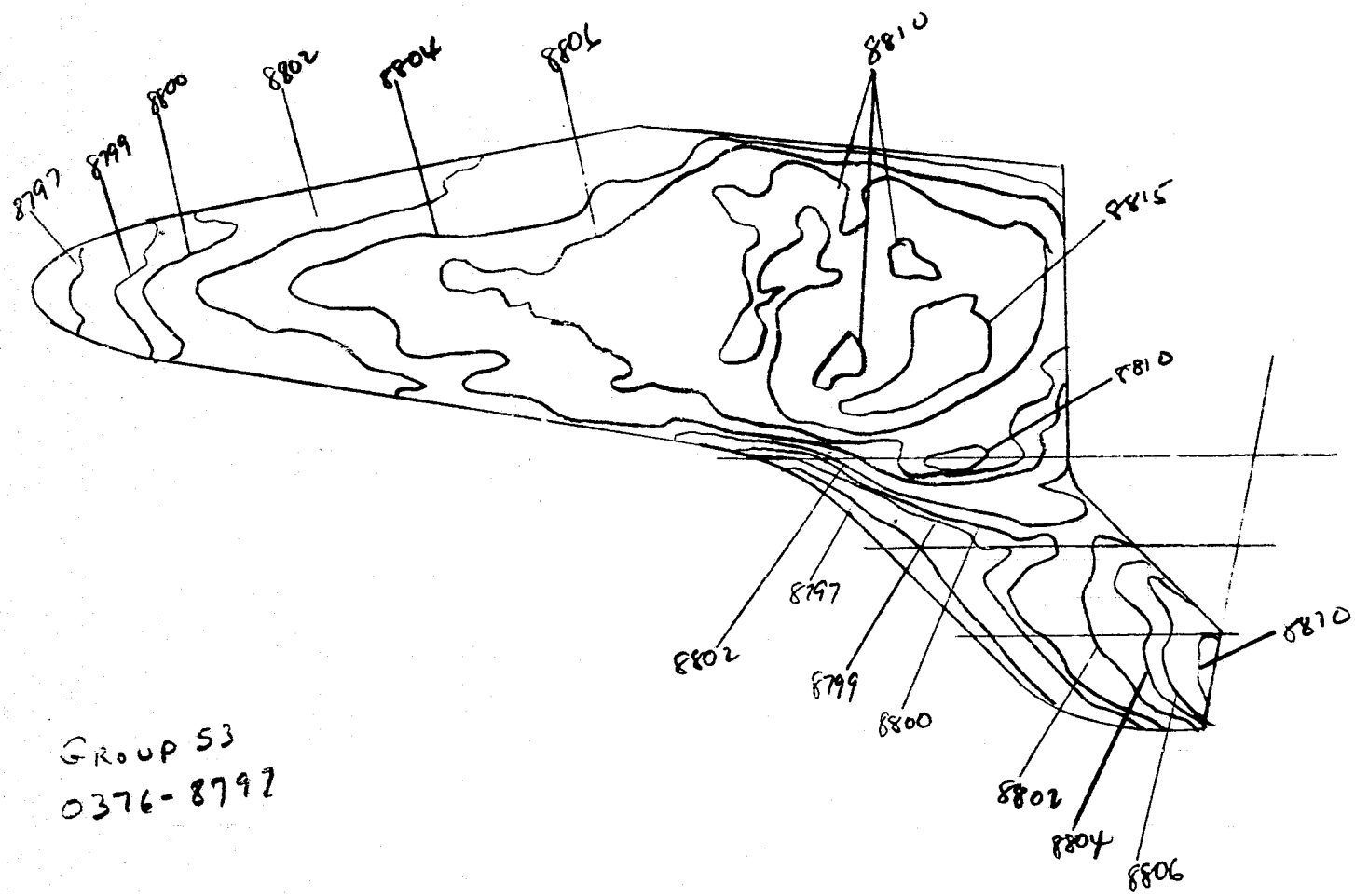

GROUP 53
0376-8797

8/21/74

NASA-RI STS OH25A

V418-83A

AEDC(ARO,INC.) ARNOLD AFS, TENNESSEE
VON KARMAN GAS DYNAMICS FACILITY
50 INCH HYPERSONIC TUNNEL A

GROUP	CONFIG	MODEL	MACH NO	PO(PSIA)	TO(DEG R)	ALPHA-MODEL	ALPHA-SECTOR	ALPHA-PREBEND	ROLL-MODEL	YAW
53	4	LEADING EDGE	7.98	430.5	1309	40.05	-10.05	30.00	180.00	-.00

T-INF (DEG R)	P-INF (PSIA)	Q-INF (PSIA)	U-INF (FT/SEC)	RHO-INF (SLUGS/FT3)	MU-INF (LB-SEC/FT2)	RE/FT (FT-1)	HREF (H= .0175FT)	STREF (H= .0175FT)
95.3	.045	1.998	3818	3.945E-05	7.674E-08	1.963E 06	3.476E-02	2.904E-02

CAMERA	ROLL NO	PAINT TEMP (DEG F)	INITIAL TEMP (DEG F)	SQUARE ROOT (RHOXCXK)	TBAR(TO)	BETA(TO)
TOP(T)	376	250	97	.0535	0	0

	PIC NO	TIME	DELTIME	H(TO)	H(TO)/HREF	H(.9TO)	H(.9TO)/HREF	H(.867TO)	H(.867TO)/HREF	ST(TO)
T	8794(250)	.03		MODEL HAS NOT REACHED CENTERLINE						
T	8795(250)	1.03		MODEL HAS NOT REACHED CENTERLINE						
T	8796(250)	2.03		MODEL HAS NOT REACHED CENTERLINE						
INJECT TIME =		2.20								
T	8797(250)	3.08	1.84	8.500E-03	.2445	1.075E-02	.3092	1.178E-02	.3389	6.990E-03
T	8798(250)	4.10	2.87	6.812E-03	.1958	8.616E-03	.2477	9.442E-03	.2715	5.598E-03
T	8799(250)	5.16	3.92	5.827E-03	.1675	7.370E-03	.2119	8.077E-03	.2322	4.789E-03
T	8800(250)	6.21	4.97	5.174E-03	.1488	6.545E-03	.1882	7.172E-03	.2063	4.255E-03
T	8801(250)	7.21	5.97	4.721E-03	.1357	5.971E-03	.1717	6.544E-03	.1882	3.881E-03
T	8802(250)	8.26	7.02	4.353E-03	.1252	5.506E-03	.1583	6.034E-03	.1735	3.579E-03
T	8803(250)	9.31	8.07	4.060E-03	.1167	5.135E-03	.1476	5.628E-03	.1618	3.335E-03
T	8804(250)	10.36	9.13	3.819E-03	.1098	4.830E-03	.1389	5.293E-03	.1522	3.139E-03
T	8805(250)	11.41	10.18	3.616E-03	.1040	4.574E-03	.1316	5.013E-03	.1442	2.975E-03
T	8806(250)	12.46	11.23	3.443E-03	.0990	4.355E-03	.1252	4.772E-03	.1372	2.828E-03
T	8807(250)	13.52	12.28	3.292E-03	.0946	4.164E-03	.1197	4.563E-03	.1312	2.705E-03
T	8808(250)	14.54	13.31	3.163E-03	.0910	4.000E-03	.1151	4.384E-03	.1261	2.601E-03
T	8809(250)	15.59	14.36	3.045E-03	.0875	3.851E-03	.1107	4.220E-03	.1213	2.500E-03
T	8810(250)	16.64	15.41	2.939E-03	.0845	3.717E-03	.1069	4.074E-03	.1171	2.414E-03
T	8811(250)	17.70	16.46	2.844E-03	.0817	3.597E-03	.1034	3.942E-03	.1133	2.337E-03
T	8812(250)	18.75	17.51	2.757E-03	.0792	3.487E-03	.1002	3.821E-03	.1098	2.265E-03
T	8813(250)	19.80	18.56	2.678E-03	.0770	3.387E-03	.0973	3.712E-03	.1067	2.199E-03
T	8814(250)	20.85	19.61	2.605E-03	.0749	3.295E-03	.0947	3.611E-03	.1038	2.139E-03
T	8815(250)	21.90	20.66	2.538E-03	.0730	3.210E-03	.0923	3.518E-03	.1011	2.086E-03
T	8816(250)	22.95	21.71	2.476E-03	.0712	3.131E-03	.0900	3.432E-03	.0986	2.034E-03
T	8817(250)	24.00	22.77	2.418E-03	.0695	3.058E-03	.0879	3.351E-03	.0963	1.986E-03
T	8818(250)	25.03	23.79	2.365E-03	.0680	2.991E-03	.0860	3.278E-03	.0942	1.943E-03

****
* UNCLASSIFIED *
****

8/21/74

NASA-RI STS OH25A

V41B-83A

AEDC(ARO,INC.) ARNOLD AFS, TENNESSEE
VON KARMAN GAS DYNAMICS FACILITY
50 INCH HYPERSONIC TUNNEL B

GROUP	CONFIG	MODEL	MACH NO	PO(PSIA)	TO(DEG R)	ALPHA-MODEL	ALPHA-SECTOR	ALPHA-PREBEND	ROLL-MODEL	YAW
53	4	LEADING EDGE	7.98	431.3	1309	40.05	-10.05	30.00	180.00	-.00

T-INF (DEG R)	P-INF (PSIA)	Q-INF (PSIA)	V-INF (FT/SEC)	RHO-INF (SLUGS/FT3)	MU-INF (LB-SEC/FT2)	RE/FT (FT-1)	HREF (R= .0175FT)	STREF (R= .0175FT)
95.3	.045	2.002	3818	3.953E-05	7.674E-08	1.966E 06	3.479E-02	2.902E-02

CAMERA	ROLL NO	PAINT TEMP (DEG F)	INITIAL TEMP (DEG F)	SQUARE ROOT (RHOXCXK)	TBAR(TO)	BETA(TO)
TOP(T)	376	250	97	.0535	2.034E-01	2.1564E-01

	PIC NO	TIME	DELTIME	H(TO)	H(TO)/HREF	H(.9TO)	H(.9TO)/HREF	H(.867TO)	H(.867TO)/HREF	ST(TO)
T	8819(250)	26.08	24.84	2.315E-03	.0666	2.928E-03	.0842	3.208E-03	.0923	1.903E-03
T	8820(250)	27.13	25.89	2.267E-03	.0652	2.867E-03	.0824	3.142E-03	.0903	1.862E-03
T	8821(250)	28.18	26.95	2.222E-03	.0639	2.811E-03	.0808	3.080E-03	.0885	1.825E-03
		29.16		MODEL HAS LEFT CENTERLINE						
T	8822(250)	29.23	28.00	2.180E-03	.0627	2.758E-03	.0793	3.022E-03	.0869	1.792E-03
T	8823(250)	30.28	29.05	2.140E-03	.0615	2.707E-03	.0778	2.967E-03	.0853	1.757E-03
T	8824(250)	31.34	30.10	2.103E-03	.0604	2.660E-03	.0765	2.915E-03	.0838	1.727E-03

ERROR IN POWRF BASE<0 A = 6001242214734237 CALL FROM 72651

Group 54
0376-8828

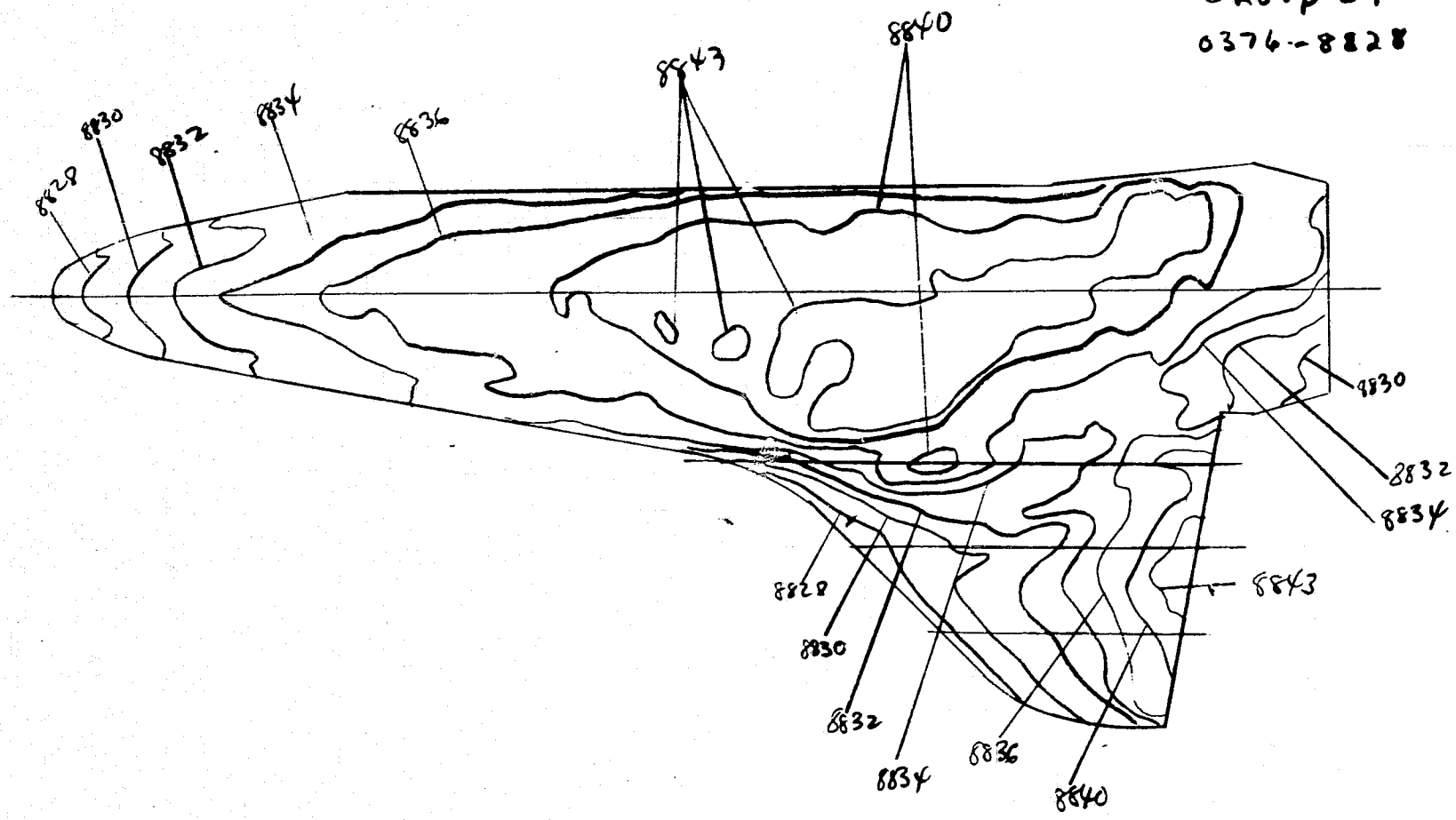

8/21/74

NASA-RI STS OH25A

V418-83A

AEDC(ARO,INC.) ARNOLD AFS, TENNESSEE
VON KARMAN GAS DYNAMICS FACILITY
50 INCH HYPERSONIC TUNNEL B

GROUP	CONFIG	MODEL	MACH NO	PO(PSIA)	TO(DEG R)	ALPHA-MODEL	ALPHA-SECTOR	ALPHA-PREBEND	ROLL-MODEL	YAW
54	3	BODY FLUSH	7.98	431.5	1310	40.03	-10.03	30.00	180.00	-.00

T-INF (DEG R)	P-INF (PSIA)	Q-INF (PSIA)	V-INF (FT/SEC)	RHO-INF (SLUGS/FT3)	MU-INF (LB-SEC/FT2)	RE/FT (FT-1)	HREF (R= .0175FT)	STREF (R= .0175FT)
95.4	.045	2.003	3818	3.953E-05	7.677E-08	1.966E 06	3.480E-02	2.902E-02

CAMERA	ROLL NO	PAINT TEMP (DEG F)	INITIAL TEMP (DEG F)	SQUARE ROOT (RHOXCXK)	TBAR(TO)	BETA(TO)
TOP(T)	376	250	94	.0535	0	0

	PIC NO	TIME	DELTIME	H(TO)	H(TO)/HREF	H(.9TO)	H(.9TO)/HREF	H(.867TO)	H(.867TO)/HREF	ST(TO)
T	8825(250)	.03		MODEL HAS NOT REACHED CENTERLINE						
T	8826(250)	1.00		MODEL HAS NOT REACHED CENTERLINE						
T	8827(250)	2.03		MODEL HAS NOT REACHED CENTERLINE						
INJECT TIME =		2.28								
T	8828(250)	3.08	1.80	8.750E-03	.2513	1.106E-02	.3178	1.212E-02	.3483	7.178E-03
T	8829(250)	4.13	2.85	6.952E-03	.1997	8.790E-03	.2525	9.633E-03	.2768	5.706E-03
T	8830(250)	5.18	3.90	5.942E-03	.1707	7.514E-03	.2158	8.234E-03	.2365	4.875E-03
T	8831(250)	6.21	4.93	5.288E-03	.1519	6.686E-03	.1920	7.327E-03	.2104	4.337E-03
T	8832(250)	7.21	5.93	4.821E-03	.1385	6.095E-03	.1751	6.680E-03	.1919	3.956E-03
T	8833(250)	8.26	6.98	4.443E-03	.1276	5.618E-03	.1614	6.156E-03	.1768	3.645E-03
T	8834(250)	9.31	8.03	4.142E-03	.1190	5.237E-03	.1504	5.739E-03	.1648	3.397E-03
T	8835(250)	10.36	9.08	3.895E-03	.1119	4.925E-03	.1415	5.397E-03	.1550	3.196E-03
T	8836(250)	11.39	10.11	3.692E-03	.1060	4.668E-03	.1341	5.116E-03	.1469	3.027E-03
T	8837(250)	12.44	11.16	3.514E-03	.1009	4.443E-03	.1276	4.869E-03	.1399	2.882E-03
T	8838(250)	13.49	12.21	3.359E-03	.0965	4.247E-03	.1220	4.655E-03	.1337	2.754E-03
T	8839(250)	14.54	13.26	3.223E-03	.0926	4.076E-03	.1171	4.466E-03	.1283	2.643E-03
T	8840(250)	15.59	14.31	3.103E-03	.0891	3.923E-03	.1126	4.299E-03	.1235	2.543E-03
T	8841(250)	16.64	15.37	2.995E-03	.0860	3.787E-03	.1087	4.150E-03	.1192	2.455E-03
T	8842(250)	17.70	16.42	2.897E-03	.0832	3.663E-03	.1052	4.015E-03	.1153	2.375E-03
T	8843(250)	18.72	17.44	2.811E-03	.0807	3.554E-03	.1020	3.895E-03	.1118	2.304E-03
T	8844(250)	19.77	18.49	2.730E-03	.0784	3.451E-03	.0991	3.782E-03	.1086	2.238E-03
T	8845(250)	20.82	19.55	2.655E-03	.0762	3.357E-03	.0964	3.679E-03	.1056	2.176E-03
T	8846(250)	21.88	20.60	2.587E-03	.0743	3.271E-03	.0939	3.584E-03	.1029	2.119E-03
T	8847(250)	22.93	21.65	2.523E-03	.0724	3.190E-03	.0916	3.496E-03	.1004	2.068E-03
T	8848(250)	23.98	22.70	2.464E-03	.0707	3.115E-03	.0894	3.414E-03	.0980	2.019E-03
T	8849(250)	25.03	23.75	2.409E-03	.0691	3.046E-03	.0874	3.338E-03	.0958	1.973E-03

****
* UNCLASSIFIED *
****

8/21/74

NASA-RI STS OH25A

V41B-83A

AEDC(ARO,INC.) ARNOLD AFS, TENNESSEE
VON KARMAN GAS DYNAMICS FACILITY
50 INCH HYPERSONIC TUNNEL B

GROUP	CONFIG	MODEL	MACH NO	PO(PSIA)	TO(DEG R)	ALPHA-MODEL	ALPHA-SECTOR	ALPHA-PREBEND	ROLL-MODEL	YAW
54	3	BODY FLUSH	7.98	432.6	1310	40.03	-10.03	30.00	180.00	-.00

T-INF (DEG R)	P-INF (PSIA)	Q-INF (PSIA)	V-INF (FT/SEC)	RHO-INF (SLUGS/FT3)	MU-INF (LB-SEC/FT2)	RE/FT (FT-1)	HREF (R= .0175FT)	STREF (R= .0175FT)
95.3	.045	2.008	3818	3.963E-05	7.676E-08	1.971E 06	3.484E-02	2.898E-02

CAMERA	ROLL NO	PAINT TEMP (DEG F)	INITIAL TEMP (DEG F)	SQUARE ROOT (RHOXCXK)	TBAR(TO)	BETA(TO)
TOP(T)	376					
		250	94	.0535	2.064E-01	2.1941E-01

	PIC NO	TIME	DELTIME	H(TO)	H(TO)/HREF	H(.9TO)	H(.9TO)/HREF	H(.867TO)	H(.867TO)/HREF	ST(TO)
T	8850(250)	26.08	24.80	2.357E-03	.0677	2.980E-03	.0855	3.266E-03	.0938	1.931E-03
T	8851(250)	27.11	25.83	2.310E-03	.0663	2.921E-03	.0838	3.201E-03	.0919	1.892E-03
T	8852(250)	28.16	26.88	2.264E-03	.0650	2.863E-03	.0822	3.137E-03	.0900	1.854E-03
T	8853(250)	29.21	27.93	2.221E-03	.0638	2.809E-03	.0806	3.078E-03	.0883	1.820E-03
		29.91		MODEL HAS LEFT CENTERLINE						
T	8854(250)	30.26	28.98	2.181E-03	.0626	2.757E-03	.0791	3.022E-03	.0867	1.786E-03
T	8855(250)	31.31	30.03	2.142E-03	.0615	2.708E-03	.0777	2.968E-03	.0852	1.754E-03

ERROR IN POWRF BASE<0 A = 6001000151527255 CALL FROM 72651

GROUP 55
0376 - 8859

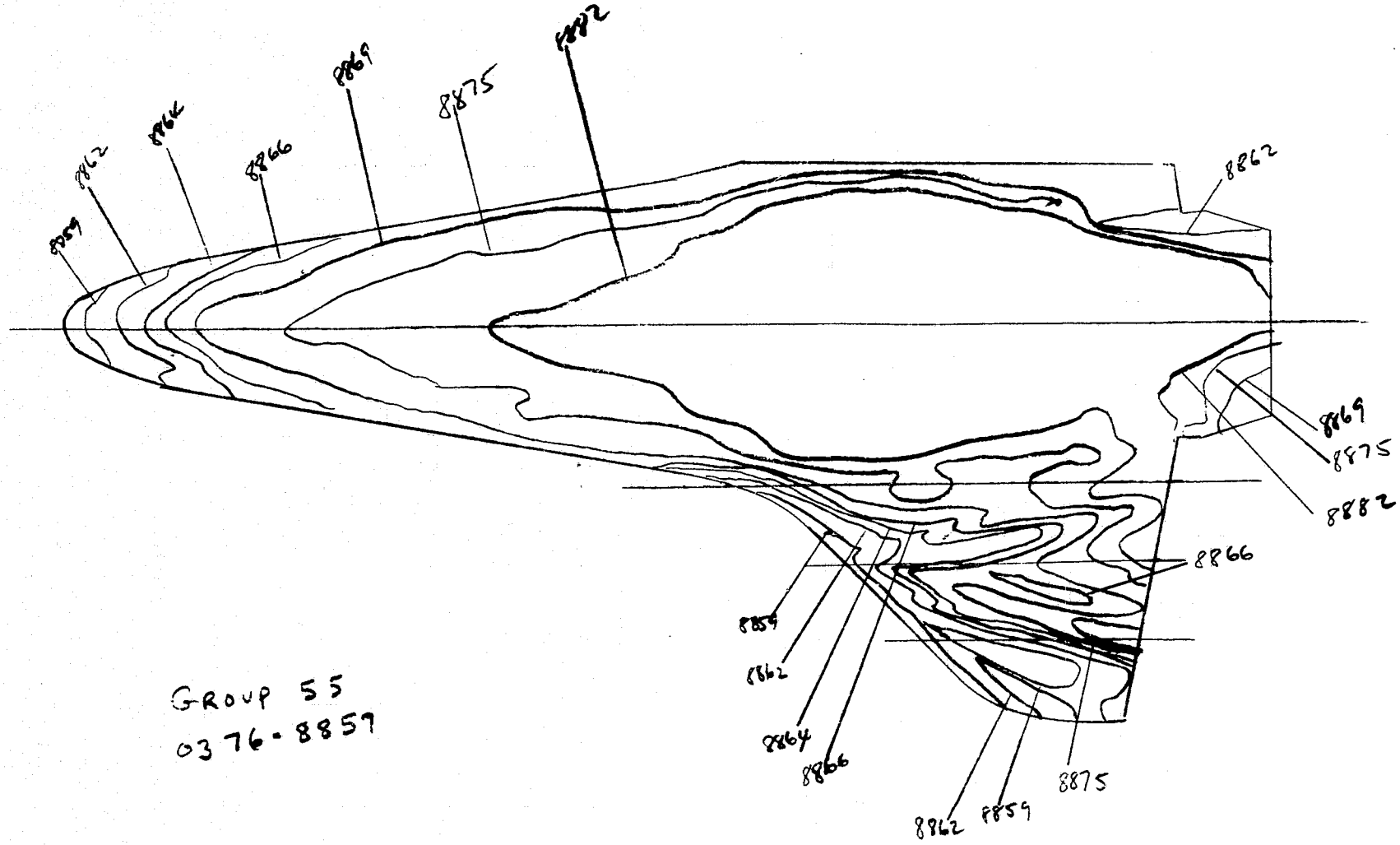

GROUP 55
0376 - 8859

8/21/74

NASA-RI STS OH25A

V418-83A

AEDC(ARO,INC.) ARNOLD AFS, TENNESSEE
VON KARMAN GAS DYNAMICS FACILITY
50 INCH HYPERSONIC TUNNEL R

GROUP	CONFIG	MODEL	MACH NO	PO(PSIA)	TO(DEG R)	ALPHA-MODEL	ALPHA-SECTOR	ALPHA-PREBEND	ROLL-MODEL	YAW
55	2	40 PERCENT	7.98	429.8	1308	30.01	-.01	30.00	180.00	-.00

T-INF (DEG R)	P-INF (PSIA)	Q-INF (PSIA)	V-INF (FT/SEC)	RHO-INF (SLUGS/FT3)	MU-INF (LB-SEC/FT2)	RE/FT (FT-1)	HREF (R= .0175FT)	STREF (R= .0175FT)
95.2	.045	1.995	3816	3.943E-05	7.666E-08	1.963E 06	3.472E-02	2.905E-02

CAMERA	ROLL NO	PAINT TEMP (DEG F)	INITIAL TEMP (DEG F)	SQUARE ROOT (RHOXCXK)	TBAR(TO)	BETA(TO)
IOP(T)	376	250	81	.0535	0	0

	PIC NO	TIME	DELTIME	H(TO)	H(TO)/HREF	H(.9TO)	H(.9TO)/HREF	H(.867TO)	H(.867TO)/HREF	ST(TO)
T	8856(250)	.03		MODEL HAS NOT REACHED CENTERLINE						
T	8857(250)	1.00		MODEL HAS NOT REACHED CENTERLINE						
T	8858(250)	2.03		MODEL HAS NOT REACHED CENTERLINE						
INJECT TIME =		2.33								
T	8859(250)	3.08	1.77	9.546E-03	.2748	1.207E-02	.3474	1.322E-02	.3807	7.862E-03
T	8860(250)	4.13	2.82	7.562E-03	.2178	9.559E-03	.2753	1.047E-02	.3016	6.229E-03
T	8861(250)	5.16	3.85	6.476E-03	.1864	8.186E-03	.2357	8.970E-03	.2582	5.331E-03
T	8862(250)	6.21	4.90	5.740E-03	.1653	7.255E-03	.2089	7.950E-03	.2289	4.728E-03
T	8863(250)	7.26	5.95	5.208E-03	.1500	6.584E-03	.1896	7.213E-03	.2077	4.289E-03
T	8864(250)	8.31	7.00	4.801E-03	.1382	6.069E-03	.1747	6.650E-03	.1915	3.953E-03
T	8865(250)	9.34	8.03	4.484E-03	.1291	5.668E-03	.1631	6.211E-03	.1788	3.691E-03
T	8866(250)	10.39	9.08	4.217E-03	.1214	5.330E-03	.1535	5.840E-03	.1682	3.473E-03
T	8867(250)	11.44	10.13	3.992E-03	.1149	5.046E-03	.1452	5.529E-03	.1591	3.285E-03
T	8868(250)	12.49	11.18	3.800E-03	.1094	4.803E-03	.1382	5.262E-03	.1515	3.127E-03
T	8869(250)	13.54	12.23	3.633E-03	.1046	4.592E-03	.1322	5.031E-03	.1448	2.990E-03
T	8870(250)	14.57	13.26	3.489E-03	.1004	4.411E-03	.1269	4.833E-03	.1391	2.872E-03
T	8871(250)	15.62	14.31	3.359E-03	.0967	4.246E-03	.1222	4.652E-03	.1339	2.764E-03
T	8872(250)	16.67	15.36	3.242E-03	.0933	4.098E-03	.1179	4.490E-03	.1292	2.667E-03
T	8873(250)	17.72	16.41	3.136E-03	.0903	3.964E-03	.1141	4.344E-03	.1251	2.583E-03
T	8874(250)	18.77	17.46	3.040E-03	.0875	3.843E-03	.1105	4.211E-03	.1211	2.498E-03
T	8875(250)	19.80	18.49	2.955E-03	.0851	3.735E-03	.1075	4.092E-03	.1178	2.432E-03
T	8876(250)	20.85	19.54	2.874E-03	.0827	3.633E-03	.1045	3.981E-03	.1145	2.363E-03
T	8877(250)	21.90	20.59	2.800E-03	.0806	3.539E-03	.1019	3.878E-03	.1116	2.304E-03
T	8878(250)	22.95	21.64	2.731E-03	.0786	3.452E-03	.0993	3.783E-03	.1088	2.245E-03
T	8879(250)	24.00	22.70	2.667E-03	.0768	3.371E-03	.0970	3.694E-03	.1063	2.194E-03
T	8880(250)	25.03	23.72	2.609E-03	.0751	3.298E-03	.0949	3.613E-03	.1039	2.145E-03

****
* UNCLASSIFIED *
****

8/21/74

NASA-RI STS OH25A

AEDC(ARO,INC.) ARNOLD AFS, TENNESSEE
VON KARMAN GAS DYNAMICS FACILITY
50 INCH HYPERSONIC TUNNEL B

V418-83A

GROUP	CONFIG	MODEL	MACH NO	PO(PSIA)	TO(DEG R)	ALPHA-MODEL	ALPHA-SECTOR	ALPHA-PREBEND	ROLL-MODEL	YAW
55	2	40 PERCENT	7.98	430.7	1308	30.01	-.01	30.00	180.00	-.00

T-INF (DEG R)	P-INF (PSIA)	Q-INF (PSIA)	V-INF (FT/SEC)	RHO-INF (SLUGS/FT3)	MU-INF (LB-SEC/FT2)	RE/FT (FT-1)	HREF (R= .0175FT)	STREF (R= .0175FT)
95.2	.045	1.999	3816	3.951E-05	7.666E-08	1.967E 06	3.476E-02	2.902E-02

CAMERA	ROLL NO	PAINT TEMP (DEG F)	INITIAL TEMP (DEG F)	SQUARE ROOT (RHOXCXK)	TRAR(TO)	BETA(TO)
TOP(T)	376	250	81	.0535	2.203E-01	2.3749E-01

	PIC NO	TIME	DELTIME	H(TO)	H(TO)/HREF	H(.9TO)	H(.9TO)/HREF	H(.867TO)	H(.867TO)/HREF	ST(TO)
T	8881(250)	26.08	24.77	2.553E-03	.0735	3.227E-03	.0928	3.536E-03	.1017	2.099E-03
T	8882(250)	27.13	25.82	2.500E-03	.0719	3.161E-03	.0909	3.463E-03	.0996	2.055E-03
		28.08		MODEL HAS LEFT CENTERLINE						
T	8883(250)	28.18	26.86	2.451E-03	.0705	3.098E-03	.0891	3.395E-03	.0977	2.015E-03
T	8884(250)	29.23	27.93	2.404E-03	.0692	3.039E-03	.0875	3.330E-03	.0958	1.977E-03
T	8885(250)	30.28	28.99	2.360E-03	.0679	2.984E-03	.0858	3.269E-03	.0940	1.940E-03

ERROR IN POWRF BASE<0 A = 5777377762626227 CALL FROM 72651

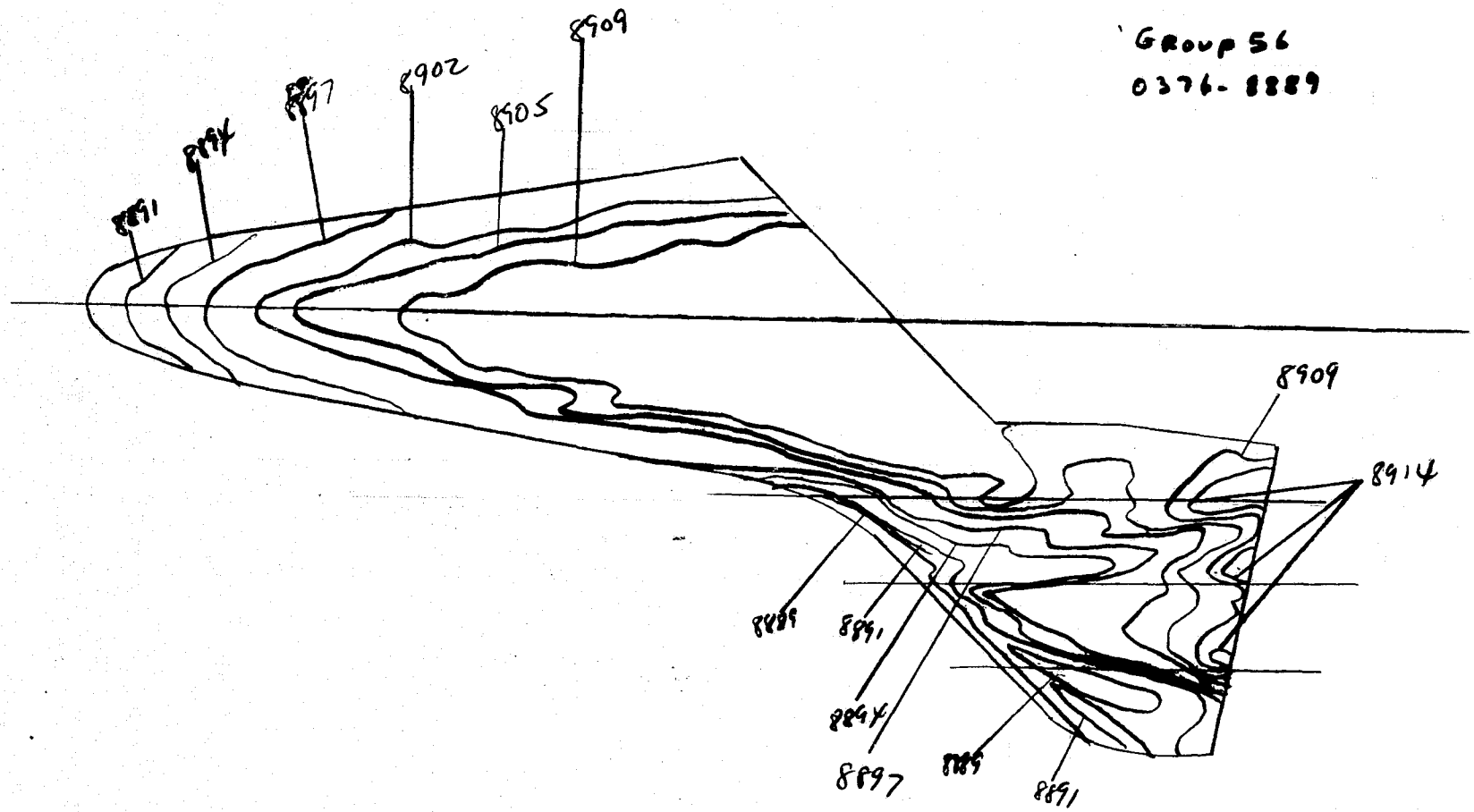
GROUP 56
0376-8889
8891
8894
8897
8902
8905
8909
8909
8914
8889
8891
8894
8897
8889
8891

8/21/74

NASA-RI STS OH25A

V418-83A

AEDC(ARO,INC.) ARNOLD AFS, TENNESSEE
VON KARMAN GAS DYNAMICS FACILITY
50 INCH HYPERSONIC TUNNEL H

GROUP	CONFIG	MODEL	MACH NO	PO(PSIA)	TO(DEG R)	ALPHA-MODEL	ALPHA-SECTOR	ALPHA-PREBEND	ROLL-MODEL	YAW
56	5	TRANSITION	7.98	430.3	1305	30.00	.00	30.00	180.00	-.00

T-INF (DEG R)	P-INF (PSIA)	Q-INF (PSIA)	V-INF (FT/SEC)	RHO-INF (SLUGS/FT3)	MU-INF (LB-SEC/FT2)	RE/FT (FT-1)	HREF (R= .0175FT)	STREF (R= .0175FT)
95.0	.045	1.997	3811	3.957E-05	7.649E-08	1.972E 06	3.473E-02	2.899E-02

CAMERA	ROLL NO	PAINT TEMP (DEG F)	INITIAL TEMP (DEG F)	SQUARE ROOT (RHOXCXK)	TBAR(TO)	BETA(TO)
TOP(T)	376	250	85	.0535	0	0

	PIC NO	TIME	DELTIME	H(TO)	H(TO)/HREF	H(.9TO)	H(.9TO)/HREF	H(.867TO)	H(.867TO)/HREF	ST(TO)
T	8886(250)	.03		MODEL HAS NOT REACHED CENTERLINE						
T	8887(250)	1.00		MODEL HAS NOT REACHED CENTERLINE						
T	8888(250)	2.03		MODEL HAS NOT REACHED CENTERLINE						
INJECT TIME =		2.23								
T	8889(250)	3.05	1.80	9.299E-03	.2676	1.177E-02	.3386	1.290E-02	.3712	7.636E-03
T	8890(250)	4.10	2.85	7.390E-03	.2127	9.351E-03	.2691	1.025E-02	.2951	6.070E-03
T	8891(250)	5.13	3.88	6.338E-03	.1824	8.020E-03	.2308	8.792E-03	.2531	5.208E-03
T	8892(250)	6.18	4.93	5.622E-03	.1618	7.114E-03	.2047	7.799E-03	.2244	4.616E-03
T	8893(250)	7.23	5.98	5.105E-03	.1469	6.459E-03	.1858	7.081E-03	.2037	4.191E-03
T	8894(250)	8.28	7.03	4.708E-03	.1355	5.957E-03	.1715	6.530E-03	.1880	3.868E-03
T	8895(250)	9.26	8.01	4.412E-03	.1270	5.582E-03	.1606	6.119E-03	.1761	3.622E-03
T	8896(250)	10.31	9.06	4.148E-03	.1194	5.248E-03	.1510	5.754E-03	.1656	3.405E-03
T	8897(250)	11.36	10.11	3.926E-03	.1130	4.968E-03	.1429	5.446E-03	.1567	3.223E-03
T	8898(250)	12.41	11.16	3.737E-03	.1075	4.728E-03	.1360	5.184E-03	.1491	3.066E-03
T	8899(250)	13.47	12.21	3.572E-03	.1028	4.520E-03	.1300	4.955E-03	.1426	2.932E-03
T	8900(250)	14.54	13.29	3.425E-03	.0985	4.333E-03	.1247	4.751E-03	.1367	2.811E-03
T	8901(250)	15.57	14.32	3.300E-03	.0949	4.175E-03	.1201	4.577E-03	.1317	2.708E-03
T	8902(250)	16.62	15.37	3.185E-03	.0916	4.030E-03	.1159	4.418E-03	.1271	2.612E-03
T	8903(250)	17.67	16.42	3.081E-03	.0886	3.899E-03	.1121	4.274E-03	.1229	2.528E-03
T	8904(250)	18.72	17.47	2.987E-03	.0859	3.780E-03	.1087	4.144E-03	.1192	2.450E-03
T	8905(250)	19.77	18.52	2.901E-03	.0834	3.671E-03	.1056	4.024E-03	.1158	2.380E-03
T	8906(250)	20.80	19.55	2.824E-03	.0812	3.573E-03	.1028	3.917E-03	.1127	2.316E-03
T	8907(250)	21.85	20.60	2.751E-03	.0791	3.481E-03	.1001	3.816E-03	.1097	2.256E-03
T	8908(250)	22.90	21.65	2.683E-03	.0772	3.395E-03	.0977	3.722E-03	.1071	2.201E-03
T	8909(250)	23.95	22.70	2.620E-03	.0754	3.316E-03	.0953	3.635E-03	.1045	2.148E-03
T	8910(250)	25.00	23.75	2.562E-03	.0737	3.241E-03	.0932	3.554E-03	.1022	2.100E-03

****
* UNCLASSIFIED *
****

8/21/74

NASA-RI STS OH25A

V418-83A

AEDC(ARO,INC.) ARNOLD AFS, TENNESSEE
VON KARMAN GAS DYNAMICS FACILITY
50 INCH HYPERSONIC TUNNEL B

GROUP	CONFIG	MODEL	MACH NO	PO(PSIA)	TO(DEG R)	ALPHA-MODEL	ALPHA-SECTOR	ALPHA-PREBEND	ROLL-MODEL	YAW
56	5	TRANSITION	7.98	431.5	1305	30.00	.00	30.00	180.00	-.00

T-INF (DEG R)	P-INF (PSIA)	Q-INF (PSIA)	V-INF (FT/SEC)	RHO-INF (SLUGS/FT3)	MU-INF (LB-SEC/FT2)	RE/FT (FT-1)	HREF (R= .0175FT)	STREF (R= .0175FT)
95.0	.045	2.003	3811	3.968E-05	7.647E-08	1.978E 06	3.478E-02	2.895E-02

CAMERA	ROLL NO	PAINT TEMP (DEG F)	INITIAL TEMP (DEG F)	SQUARE ROOT (RHOXCXK)	TBAR(TO)	BETA(TO)
TOP(T)	376	250	85	.0535	2.171E-01	2.3337E-01

	PIC NO	TIME	DELTIME	H(TO)	H(TO)/HREF	H(.9TO)	H(.9TO)/HREF	H(.867TO)	H(.867TO)/HREF	ST(TO)
T	8911(250)	26.05	24.80	2.507E-03	.0721	3.172E-03	.0912	3.477E-03	.1000	2.057E-03
T	8912(250)	27.11	25.86	2.455E-03	.0706	3.107E-03	.0893	3.406E-03	.0979	2.012E-03
T	8913(250)	28.13	26.88	2.408E-03	.0692	3.047E-03	.0876	3.340E-03	.0960	1.973E-03
		28.63		MODEL HAS LEFT CENTERLINE						
T	8914(250)	29.18	27.93	2.362E-03	.0679	2.989E-03	.0859	3.277E-03	.0942	1.935E-03
T	8915(250)	30.23	28.98	2.319E-03	.0667	2.934E-03	.0843	3.217E-03	.0925	1.900E-03

ERROR IN POWRF BASE<0 A = 6001242123461063 CALL FROM 72651

ORIGINAL PAGE IS
OF POOR QUALITY

ORIGINAL PAGE IS
OF POOR QUALITY

ORIGINAL PAGE IS
OF POOR QUALITY

GROUP 57
0376- 8919

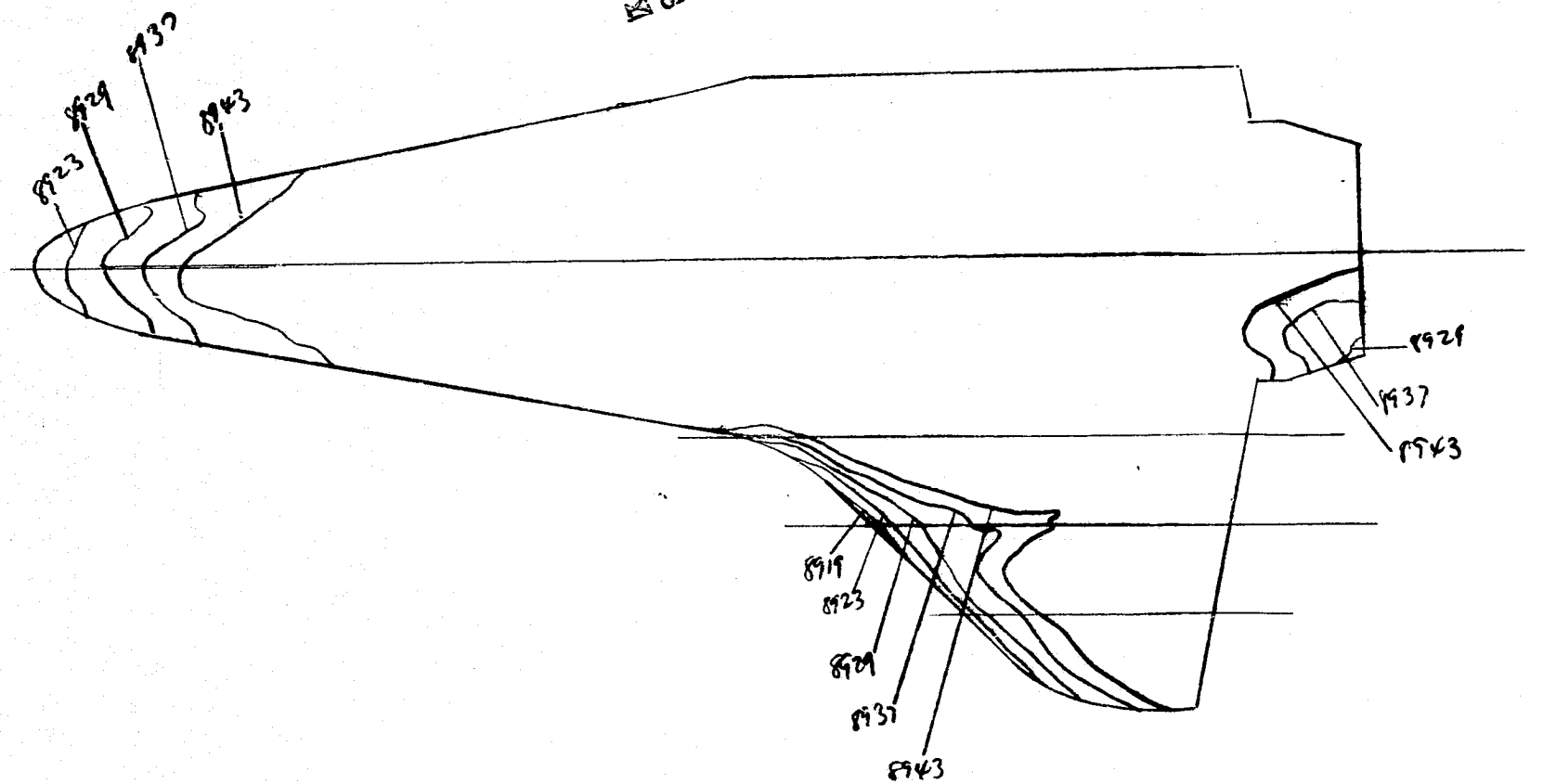

GROUP 57
0376- 8919

8/21/74

NASA-R1 STS OM25A

V418-83A

AEDC(AHO,INC.) ARNOLD AFS, TENNESSEE
VON KARMAN GAS DYNAMICS FACILITY
50 INCH HYPERSONIC TUNNEL B

GROUP	CONFIG	MODEL	MACH.NO	PO(PSIA)	TO(DEG R)	ALPHA-MODEL	ALPHA-SECTOR	ALPHA-PREBEND	ROLL-MODEL	YAW
57	2	40 PERCENT	7.98	433.1	1303	40.02	-10.02	30.00	180.00	-.00

T-INF (DEG R)	P-INF (PSIA)	Q-INF (PSIA)	V-INF (FT/SEC)	RHO-INF (SLUGS/FT3)	MU-INF (LB-SEC/FT2)	RE/FT (FT-1)	HREF (R= .0175FT)	STREF (R= .0175FT)
94.8	.045	2.010	3808	3.989E-05	7.635E-08	1.990E 06	3.483E-02	2.887E-02

CAMERA	ROLL NO	PAINT TEMP (DEG F)	INITIAL TEMP (DEG F)	SQUARE ROOT (RHOXCXK)	TBAR(TO)	BETA(TO)
TOP(T)	376	350	86	.0550	0	0

	PIC NO	TIME	DELTIME	H(TO)	H(TO)/HREF	H(.9TO)	H(.9TO)/HREF	H(.867TO)	H(.867TO)/HREF	ST(TO)
T	8916(350)	0		MODEL HAS NOT REACHED CENTERLINE						
T	8917(350)	.98		MODEL HAS NOT REACHED CENTERLINE						
T	8918(350)	2.00		MODEL HAS NOT REACHED CENTERLINE						
INJECT TIME =		2.30								
T	8919(350)	3.05	1.76	1.800E-02	.5167	2.390E-02	.6861	2.682E-02	.7700	1.461E-02
T	8920(350)	4.08	2.79	1.431E-02	.4105	1.900E-02	.5451	2.132E-02	.6118	1.160E-02
T	8921(350)	5.13	3.84	1.219E-02	.3500	1.619E-02	.4647	1.817E-02	.5216	9.896E-03
T	8922(350)	6.18	4.89	1.080E-02	.3100	1.434E-02	.4116	1.610E-02	.4620	8.762E-03
T	8923(350)	7.23	5.94	9.798E-03	.2812	1.301E-02	.3733	1.460E-02	.4190	7.946E-03
T	8924(350)	8.28	6.99	9.032E-03	.2592	1.199E-02	.3441	1.346E-02	.3863	7.323E-03
T	8925(350)	9.31	8.02	8.434E-03	.2420	1.120E-02	.3214	1.257E-02	.3607	6.839E-03
T	8926(350)	10.36	9.07	7.930E-03	.2276	1.053E-02	.3022	1.182E-02	.3391	6.430E-03
T	8927(350)	11.41	10.12	7.507E-03	.2154	9.968E-03	.2860	1.119E-02	.3210	6.086E-03
T	8928(350)	12.44	11.15	7.153E-03	.2053	9.498E-03	.2726	1.066E-02	.3059	5.801E-03
T	8929(350)	13.49	12.20	6.838E-03	.1961	9.080E-03	.2604	1.019E-02	.2923	5.540E-03
T	8930(350)	14.54	13.25	6.561E-03	.1883	8.712E-03	.2500	9.778E-03	.2806	5.322E-03
T	8931(350)	15.59	14.30	6.315E-03	.1812	8.386E-03	.2406	9.412E-03	.2701	5.119E-03
T	8932(350)	16.64	15.35	6.095E-03	.1748	8.094E-03	.2321	9.084E-03	.2605	4.938E-03
T	8933(350)	17.67	16.38	5.901E-03	.1693	7.836E-03	.2248	8.795E-03	.2523	4.784E-03
T	8934(350)	18.72	17.43	5.721E-03	.1641	7.596E-03	.2179	8.526E-03	.2446	4.636E-03
T	8935(350)	19.77	18.48	5.555E-03	.1594	7.377E-03	.2116	8.280E-03	.2375	4.501E-03
T	8936(350)	20.80	19.51	5.407E-03	.1551	7.180E-03	.2059	8.059E-03	.2311	4.379E-03
T	8937(350)	21.85	20.56	5.267E-03	.1511	6.994E-03	.2006	7.850E-03	.2251	4.265E-03
T	8938(350)	22.90	21.61	5.138E-03	.1473	6.822E-03	.1957	7.657E-03	.2196	4.160E-03
T	8939(350)	23.95	22.66	5.017E-03	.1439	6.662E-03	.1910	7.477E-03	.2144	4.062E-03
T	8940(350)	24.98	23.69	4.907E-03	.1407	6.516E-03	.1869	7.313E-03	.2098	3.975E-03

AL PAGE IS
OF POOR QUALITY

****
* UNCLASSIFIED *
****

8/21/74

NASA-RI STS OH25A

V41B-83A

AEDC(ARO,INC.) ARNOLD AFS, TENNESSEE
VON KARMAN GAS DYNAMICS FACILITY
50 INCH HYPERSONIC TUNNEL B

GROUP	CONFIG	MODEL	MACH NO	PO(PSIA)	TO(DEG R)	ALPHA-MODEL	ALPHA-SECTOR	ALPHA-PREBEND	ROLL-MODEL	YAW
57	2	40 PERCENT	7.98	434.0	1302	40.02	-10.02	30.00	180.00	-.00

T-INF (DEG R)	P-INF (PSIA)	Q-INF (PSIA)	V-INF (FT/SEC)	RHO-INF (SLUGS/FT3)	MU-INF (LB-SEC/FT2)	RE/FT (FT-1)	HREF (R= .0175FT)	STREF (R= .0175FT)
94.9	.045	2.014	3807	3.999E-05	7.632E-08	1.995E 06	3.486E-02	2.883E-02

CAMERA	ROLL NO	PAINT TEMP (DEG F)	INITIAL TEMP (DEG F)	SQUARE ROOT (RHOXCXK)	TBAR(TO)	BETA(TO)
TOP(T)	376	350	86	.0550	3.490E-01	4.3422E-01

	PIC NO	TIME	DELTIME	H(TO)	H(TO)/HREF	H(.9TO)	H(.9TO)/HREF	H(.867TO)	H(.867TO)/HREF	ST(TO)
T	8941(350)	26.03	24.74	4.802E-03	.1376	6.376E-03	.1828	7.156E-03	.2051	3.884E-03
T	8942(350)	27.08	25.79	4.703E-03	.1349	6.245E-03	.1791	7.009E-03	.2010	3.809E-03
T	8943(350)	28.13	26.84	4.610E-03	.1322	6.121E-03	.1756	6.870E-03	.1971	3.734E-03
		28.56		MODEL HAS LEFT CENTERLINE						
T	8944(350)	29.18	27.89	4.522E-03	.1297	6.005E-03	.1722	6.739E-03	.1933	3.663E-03
T	8945(350)	30.23	28.94	4.439E-03	.1273	5.895E-03	.1691	6.616E-03	.1897	3.595E-03

ERROR IN POWRF BASE<0 A = 6001242214734237 CALL FROM 72651

GROUP 58
0376-8949

C-3

ORIGINAL PAGE IS
OF POOR QUALITY

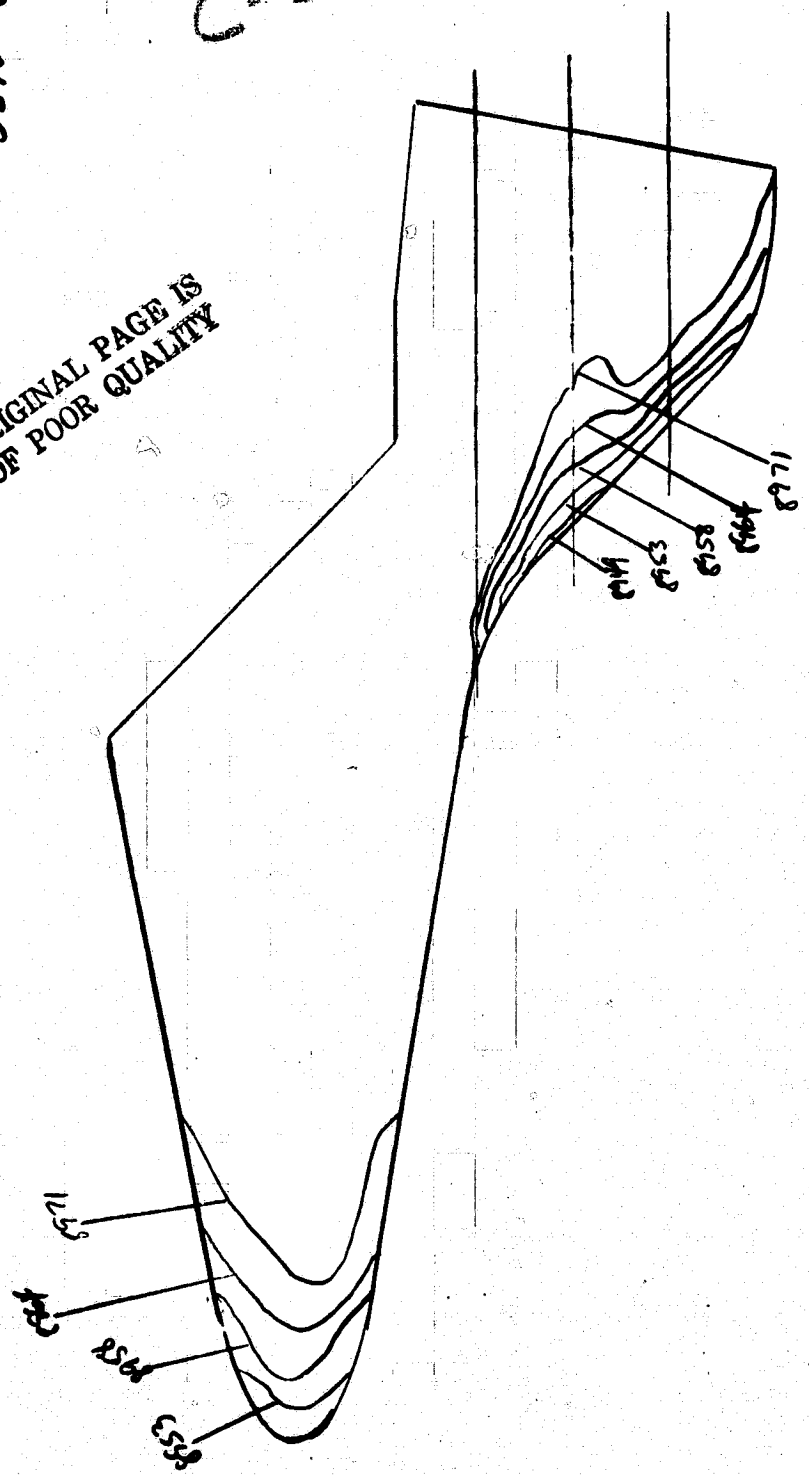

8/21/74

NASA-RI STS OH25A

V418-83A

AEDC(ARO,INC.) ARNOLD AFS, TENNESSEE
VON KARMAN GAS DYNAMICS FACILITY
50 INCH HYPERSONIC TUNNEL H

GROUP	CONFIG	MODEL	MACH NO	PO(PSIA)	TO(DEG R)	ALPHA-MODEL	ALPHA-SECTOR	ALPHA-PREBEND	ROLL-MODEL	YAW
58	5	TRANSITION	7.98	429.6	1301	40.03	-10.03	30.00	180.00	-.00

T-INF (DEG R)	P-INF (PSIA)	Q-INF (PSIA)	V-INF (FT/SEC)	RHO-INF (SLUGS/FT3)	MU-INF (LB-SEC/FT2)	RE/FT (FT-1)	HREF (R= .0175FT)	STREF (R= .0175FT)
94.7	.045	1.994	3806	3.962E-05	7.626E-08	1.977E 06	3.468E-02	2.896E-02

CAMERA	ROLL NO	PAINT TEMP (DEG F)	INITIAL TEMP (DEG F)	SQUARE ROOT (RHOXCXK)	TBAR(TO)	BETA(TO)
TOP(T)	376	350	87	.0550	0	0

	PIC NO	TIME	DELTIME	H(TO)	H(TO)/HREF	H(.9TO)	H(.9TO)/HREF	H(.867TO)	H(.867TO)/HREF	ST(TO)
T	8946(350)	.03		MODEL HAS NOT REACHED CENTERLINE						
T	8947(350)	1.00		MODEL HAS NOT REACHED CENTERLINE						
T	8948(350)	2.03		MODEL HAS NOT REACHED CENTERLINE						
INJECT TIME =		2.30								
T	8949(350)	3.05	1.76	1.797E-02	.5179	2.387E-02	.6879	2.680E-02	.7723	1.469E-02
T	8950(350)	4.10	2.81	1.422E-02	.4098	1.889E-02	.5444	2.121E-02	.6112	1.162E-02
T	8951(350)	5.13	3.84	1.217E-02	.3507	1.617E-02	.4658	1.815E-02	.5230	9.943E-03
T	8952(350)	6.18	4.89	1.078E-02	.3107	1.432E-02	.4127	1.608E-02	.4634	8.810E-03
T	8953(350)	7.23	5.94	9.783E-03	.2820	1.300E-02	.3746	1.459E-02	.4205	7.997E-03
T	8954(350)	8.28	6.99	9.018E-03	.2598	1.198E-02	.3451	1.345E-02	.3874	7.363E-03
T	8955(350)	9.34	8.04	8.408E-03	.2422	1.117E-02	.3218	1.254E-02	.3612	6.867E-03
T	8956(350)	10.36	9.07	7.918E-03	.2280	1.052E-02	.3029	1.181E-02	.3401	6.463E-03
T	8957(350)	11.41	10.12	7.495E-03	.2159	9.957E-03	.2868	1.118E-02	.3220	6.122E-03
T	8958(350)	12.46	11.17	7.134E-03	.2055	9.477E-03	.2729	1.064E-02	.3064	5.824E-03
T	8959(350)	13.52	12.22	6.820E-03	.1965	9.060E-03	.2610	1.017E-02	.2930	5.569E-03
T	8960(350)	14.57	13.27	6.545E-03	.1885	8.694E-03	.2504	9.760E-03	.2811	5.343E-03
T	8961(350)	15.62	14.33	6.300E-03	.1814	8.369E-03	.2410	9.396E-03	.2706	5.142E-03
T	8962(350)	16.64	15.35	6.086E-03	.1752	8.084E-03	.2328	9.076E-03	.2613	4.966E-03
T	8963(350)	17.70	16.40	5.887E-03	.1696	7.821E-03	.2253	8.780E-03	.2529	4.807E-03
T	8964(350)	18.75	17.45	5.707E-03	.1644	7.582E-03	.2183	8.512E-03	.2451	4.657E-03
T	8965(350)	19.80	18.51	5.543E-03	.1596	7.363E-03	.2121	8.267E-03	.2381	4.524E-03
T	8966(350)	20.85	19.56	5.392E-03	.1552	7.162E-03	.2062	8.041E-03	.2315	4.399E-03
T	8967(350)	21.90	20.61	5.253E-03	.1513	6.977E-03	.2009	7.834E-03	.2256	4.287E-03
T	8968(350)	22.93	21.63	5.126E-03	.1476	6.810E-03	.1961	7.646E-03	.2201	4.182E-03
T	8969(350)	23.98	22.68	5.006E-03	.1441	6.650E-03	.1915	7.466E-03	.2150	4.084E-03
T	8970(350)	25.03	23.74	4.894E-03	.1409	6.501E-03	.1871	7.299E-03	.2101	3.991E-03

****
* UNCLASSIFIED *
****

8/21/74

NASA-RI STS OH25A

V418-93A

AEDC(ARO,INC.) ARNOLD AFS, TENNESSEE
VON KARMAN GAS DYNAMICS FACILITY
50 INCH HYPERSONIC TUNNEL A

GROUP	CONFIG	MODEL	MACH NO	PO(PSIA)	TO(DEG R)	ALPHA-MODEL	ALPHA-SECTOR	ALPHA-PREBEND	ROLL-MODEL	YAW
58	5	TRANSITION	7.98	431.0	1301	40.03	-10.03	30.00	180.00	-.00

T-INF (DEG R)	P-INF (PSIA)	Q-INF (PSIA)	V-INF (FT/SEC)	RHO-INF (SLUGS/FT3)	MU-INF (LB-SEC/FT2)	RE/FT (FT-1)	HREF (R= .0175FT)	STREF (R= .0175FT)
94.7	.045	2.000	3806	3.475E-05	7.626E-08	1.984E 06	3.474E-02	2.892E-02

CAMERA	ROLL NO	PAINT TEMP (DEG F)	INITIAL TEMP (DEG F)	SQUARE ROOT (RHOXCXK)	TBAR(TO)	BETA(TO)
TOP(T)	376	350	87	.0550	3.486E-01	4.3353E-01

	PIC NO	TIME	DELTIME	H(TO)	H(TO)/HREF	H(.9TO)	H(.9TO)/HREF	H(.867TO)	H(.867TO)/HREF	ST(TO)
T	8971(350)	26.08	24.79	4.789E-03	.1378	6.362E-03	.1831	7.143E-03	.2056	3.904E-03
T	8972(350)	27.13	25.84	4.691E-03	.1350	6.231E-03	.1794	6.996E-03	.2014	3.825E-03
		27.41		MODEL HAS LEFT CENTERLINE						
T	8973(350)	28.18	26.89	4.598E-03	.1324	6.108E-03	.1759	6.858E-03	.1974	3.750E-03
T	8974(350)	29.23	27.94	4.511E-03	.1298	5.992E-03	.1724	6.727E-03	.1936	3.675E-03

ERROR IN FOWRF BASE<0 A = 6001242032207076 CALL FROM 72651

GROUP 59
0376 - 8978

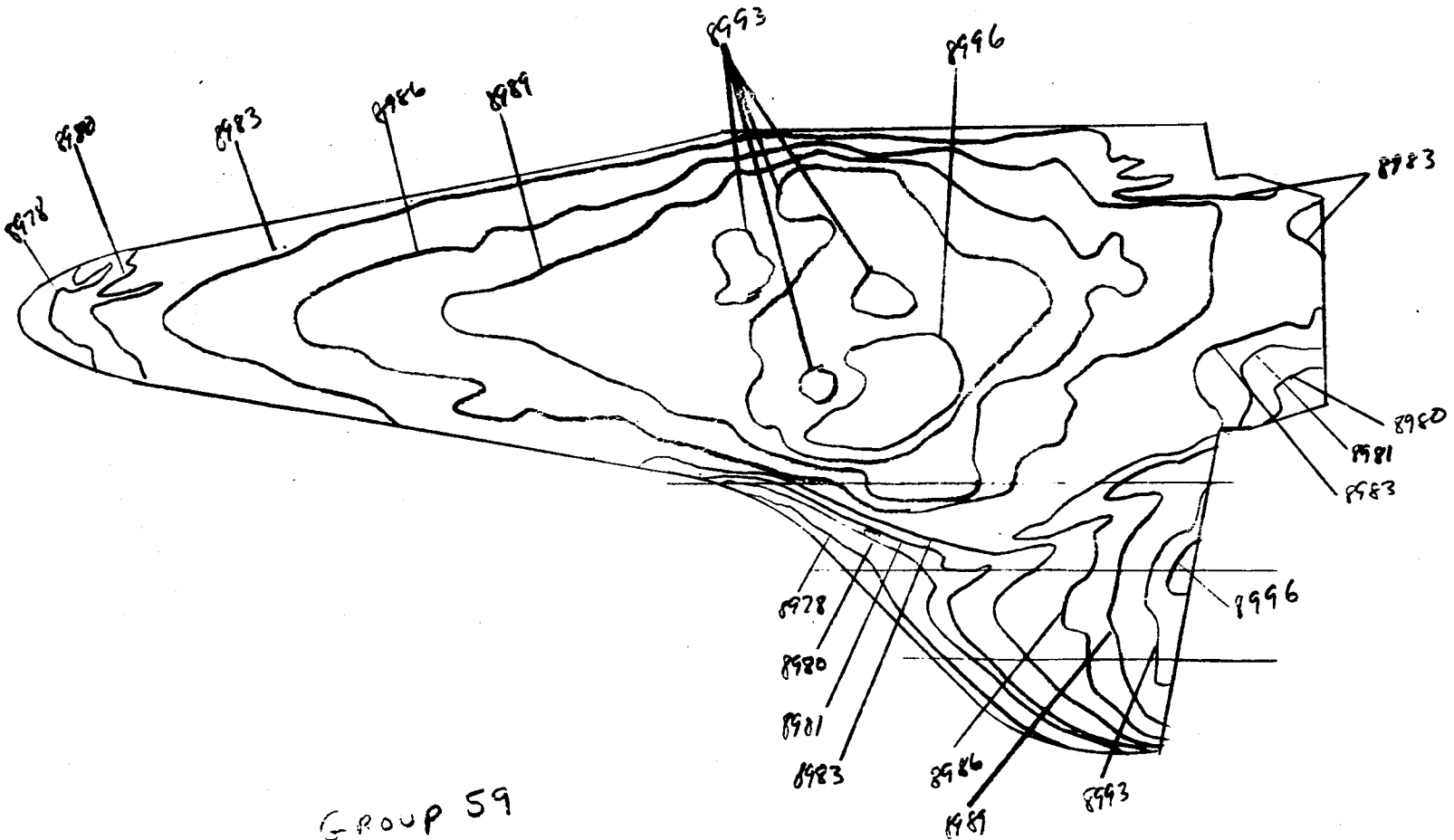

GROUP 59
0376- 8978

8/21/74

NASA-RI STS OM25A

AEDC(ARO,INC.) ARNOLD AFS, TENNESSEE
VON KARMAN GAS DYNAMICS FACILITY
50 INCH HYPERSONIC TUNNEL A

V418-83A

GROUP	CONFIG	MODEL	MACH NO	PO(PSIA)	TO(DEG R)	ALPHA-MODEL	ALPHA-SECTOR	ALPHA-PREBEND	ROLL-MODEL	YAW
59	2	40 PERCENT	7.98	432.0	1300	40.02	-10.02	30.00	180.00	-.00

T-INF (DEG R)	P-INF (PSIA)	Q-INF (PSIA)	V-INF (FT/SEC)	RHO-INF (SLUGS/FT3)	MU-INF (LB-SEC/FT2)	RE/FT (FT-1)	HREF (R= .0175FT)	STREF (R= .0175FT)
94.7	.045	2.005	3804	3.987E-05	7.620E-08	1.990E 06	3.477E-02	2.887E-02

CAMERA	ROLL NO	PAINT TEMP (DEG F)	INITIAL TEMP (DEG F)	SQUARE ROOT (RHOXCXK)	TBAR(TO)	BETA(TO)
TOP(T)	376	250	86	.0535	0	0

	PIC NO	TIME	DELTIME	H(TO)	H(TO)/HREF	H(.9TO)	H(.9TO)/HREF	H(.867TO)	H(.867TO)/HREF	ST(TO)
T	8975(250)	.03		MODEL HAS NOT REACHED CENTERLINE						
T	8976(250)	1.00		MODEL HAS NOT REACHED CENTERLINE						
T	8977(250)	2.03		MODEL HAS NOT REACHED CENTERLINE						
INJECT TIME =		2.28								
T	8978(250)	3.08	1.80	9.320E-03	.2679	1.181E-02	.3394	1.295E-02	.3722	7.615E-03
T	8979(250)	4.10	2.83	7.438E-03	.2138	9.421E-03	.2708	1.033E-02	.2970	6.076E-03
T	8980(250)	5.16	3.88	6.350E-03	.1825	8.043E-03	.2312	8.822E-03	.2535	5.186E-03
T	8981(250)	6.21	4.93	5.632E-03	.1619	7.134E-03	.2051	7.825E-03	.2249	4.601E-03
T	8982(250)	7.26	5.98	5.113E-03	.1469	6.477E-03	.1861	7.104E-03	.2041	4.175E-03
T	8983(250)	8.28	7.01	4.724E-03	.1357	5.984E-03	.1719	6.563E-03	.1885	3.854E-03
T	8984(250)	9.34	8.06	4.405E-03	.1266	5.580E-03	.1603	6.120E-03	.1758	3.596E-03
T	8985(250)	10.39	9.11	4.143E-03	.1190	5.248E-03	.1508	5.756E-03	.1654	3.382E-03
T	8986(250)	11.44	10.16	3.923E-03	.1127	4.969E-03	.1428	5.450E-03	.1566	3.201E-03
T	8987(250)	12.49	11.21	3.734E-03	.1073	4.730E-03	.1359	5.188E-03	.1490	3.047E-03
T	8988(250)	13.54	12.26	3.571E-03	.1026	4.523E-03	.1299	4.961E-03	.1425	2.914E-03
T	8989(250)	14.57	13.29	3.430E-03	.0985	4.345E-03	.1248	4.765E-03	.1369	2.797E-03
T	8990(250)	15.62	14.34	3.302E-03	.0949	4.182E-03	.1201	4.587E-03	.1318	2.694E-03
T	8991(250)	16.67	15.39	3.187E-03	.0915	4.037E-03	.1160	4.428E-03	.1272	2.599E-03
T	8992(250)	17.72	16.44	3.084E-03	.0886	3.906E-03	.1122	4.284E-03	.1230	2.515E-03
T	8993(250)	18.75	17.47	2.992E-03	.0859	3.789E-03	.1088	4.156E-03	.1194	2.440E-03
T	8994(250)	19.80	18.52	2.906E-03	.0835	3.680E-03	.1057	4.037E-03	.1159	2.369E-03
T	8995(250)	20.85	19.57	2.826E-03	.0812	3.580E-03	.1028	3.927E-03	.1128	2.304E-03
T	8996(250)	21.90	20.62	2.753E-03	.0791	3.488E-03	.1001	3.825E-03	.1098	2.244E-03
T	8997(250)	22.95	21.67	2.686E-03	.0771	3.402E-03	.0977	3.731E-03	.1071	2.189E-03
T	8998(250)	24.00	22.72	2.623E-03	.0753	3.322E-03	.0954	3.644E-03	.1046	2.138E-03
T	8999(250)	25.03	23.75	2.566E-03	.0737	3.250E-03	.0933	3.565E-03	.1024	2.091E-03

```
                                        ****************
                                        * UNCLASSIFIED *
                                        ****************
                                            8/21/74

NASA-RI STS OH25A                    AEDC(ARO,INC.) ARNOLD AFS, TENNESSEE
                                      VON KARMAN GAS DYNAMICS FACILITY
V418-83A                                 50 INCH HYPERSONIC TUNNEL B

GROUP  CONFIG    MODEL      MACH NO    PO(PSIA)  TO(DEG R)  ALPHA-MODEL  ALPHA-SECTOR  ALPHA-PREBEND  ROLL-MODEL  YAW
  59      2   40 PERCENT      7.98      433.3      1300        40.02       -10.02         30.00        180.00      -.00

 T-INF    P-INF   Q-INF   V-INF     RHO-INF      MU-INF        RE/FT      HREF          STREF
(DEG R)  (PSIA)  (PSIA)  (FT/SEC)  (SLUGS/FT3)  (LB-SEC/FT2)  (FT-1)     (R= .0175FT)  (R= .0175FT)
 94.6     .045   2.011    3804     3.999E-05    7.619E-08   1.997E 06   3.483E-02     2.882E-02

CAMERA        ROLL NO  PAINT TEMP (DEG F)   INITIAL TEMP (DEG F)   SQUARE ROOT (RHOXCXK)    TBAR(TO)   BETA(TO)
TOP(T)          376
                          250                  86                   .0535                   2.174E-01  2.3372E-01

   PIC NO      TIME DELTIME      H(TO)      H(TO)/HREF   H(.9TO)    H(.9TO)/HREF H( .867TO)  H( .867TO)/HREF  ST(TO)
T  9000(250) 26.08  24.80      2.511E-03     .0721     3.180E-03     .0913      3.486E-03     .1002       2.047E-03
T  9001(250) 27.13  25.85      2.459E-03     .0706     3.115E-03     .0894      3.416E-03     .0981       2.004E-03
             27.78             MODEL HAS LEFT CENTERLINE
T  9002(250) 28.18  26.90      2.411E-03     .0692     3.053E-03     .0877      3.349E-03     .0962       1.966E-03
T  9003(250) 29.21  27.93      2.366E-03     .0680     2.997E-03     .0861      3.287E-03     .0944       1.930E-03
      ERROR IN FOWRF  BASE<0      A = 6001242160206434 CALL FROM 72651
```

GROUP 60

0376-9007

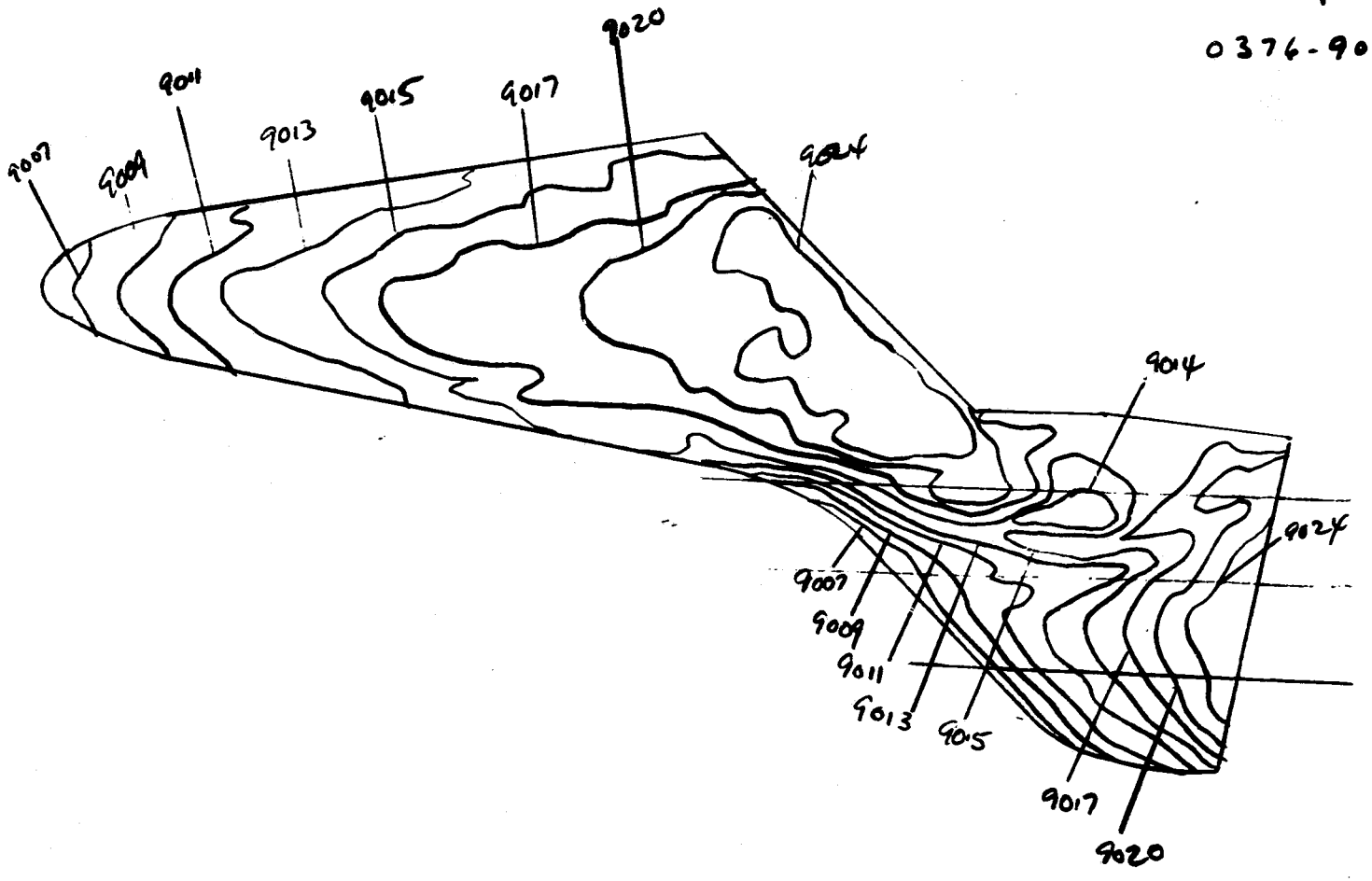

8/21/74

NASA-RI STS OH25A

V418-83A

AEDC(ARO,INC.) ARNOLD AFS, TENNESSEE
VON KARMAN GAS DYNAMICS FACILITY
50 INCH HYPERSONIC TUNNEL A

GROUP	CONFIG	MODEL	MACH NO	PO(PSIA)	TO(DEG R)	ALPHA-MODEL	ALPHA-SECTOR	ALPHA-PREBEND	ROLL-MODEL	YAW
60	5	TRANSITION	7.98	430.4	1299	40.03	-10.03	30.00	180.00	-.00

T-INF (DEG R)	P-INF (PSIA)	Q-INF (PSIA)	V-INF (FT/SEC)	RHO-INF (SLUGS/FT3)	MU-INF (LB-SEC/FT2)	RE/FT (FT-1)	HREF (R= .0175FT)	STREF (R= .0175FT)
94.6	.045	1.998	3803	3.975E-05	7.614E-08	1.585E 06	3.471E-02	2.891E-02

CAMERA	ROLL NO	PAINT TEMP (DEG F)	INITIAL TEMP (DEG F)	SQUARE ROOT (RHOXCXK)	TBAR(TO)	BETA(TO)
TOP(T)	376	250	87	.0535	0	0

	PIC NO	TIME	DELTIME	H(TO)	H(TO)/HREF	H(.9TO)	H(.9TO)/HREF	H(.867TO)	H(.867TO)/HREF	ST(TO)
T	9004(250)	.03		MODEL HAS NOT REACHED CENTERLINE						
T	9005(250)	1.00		MODEL HAS NOT REACHED CENTERLINE						
T	9006(250)	2.03		MODEL HAS NOT REACHED CENTERLINE						
INJECT TIME =		2.23								
T	9007(250)	3.05	1.80	9.276E-03	.2672	1.175E-02	.3386	1.289E-02	.3713	7.604E-03
T	9008(250)	4.10	2.85	7.372E-03	.2123	9.342E-03	.2691	1.025E-02	.2951	6.044E-03
T	9009(250)	5.16	3.91	6.302E-03	.1815	7.986E-03	.2300	8.759E-03	.2522	5.165E-03
T	9010(250)	6.21	4.96	5.594E-03	.1611	7.089E-03	.2041	7.775E-03	.2239	4.583E-03
T	9011(250)	7.23	5.98	5.092E-03	.1466	6.452E-03	.1858	7.077E-03	.2038	4.173E-03
T	9012(250)	8.28	7.03	4.696E-03	.1352	5.951E-03	.1713	6.527E-03	.1879	3.847E-03
T	9013(250)	9.34	8.09	4.380E-03	.1261	5.550E-03	.1598	6.088E-03	.1752	3.586E-03
T	9014(250)	10.39	9.14	4.121E-03	.1186	5.221E-03	.1503	5.727E-03	.1649	3.375E-03
T	9015(250)	11.44	10.19	3.902E-03	.1123	4.945E-03	.1424	5.423E-03	.1561	3.196E-03
T	9016(250)	12.46	11.21	3.719E-03	.1071	4.713E-03	.1357	5.169E-03	.1488	3.045E-03
T	9017(250)	13.52	12.26	3.556E-03	.1024	4.507E-03	.1297	4.943E-03	.1423	2.913E-03
T	9018(250)	14.57	13.32	3.413E-03	.0982	4.325E-03	.1244	4.744E-03	.1365	2.792E-03
T	9019(250)	15.62	14.37	3.286E-03	.0946	4.164E-03	.1198	4.567E-03	.1314	2.689E-03
T	9020(250)	16.67	15.42	3.172E-03	.0913	4.019E-03	.1157	4.408E-03	.1269	2.596E-03
T	9021(250)	17.70	16.44	3.071E-03	.0884	3.892E-03	.1120	4.269E-03	.1229	2.515E-03
T	9022(250)	18.77	17.52	2.975E-03	.0856	3.770E-03	.1085	4.135E-03	.1190	2.436E-03
T	9023(250)	19.80	18.55	2.892E-03	.0832	3.665E-03	.1055	4.019E-03	.1157	2.366E-03
T	9024(250)	20.85	19.60	2.813E-03	.0810	3.565E-03	.1026	3.910E-03	.1125	2.302E-03
T	9025(250)	21.90	20.65	2.741E-03	.0789	3.473E-03	.1000	3.809E-03	.1096	2.243E-03
T	9026(250)	22.95	21.70	2.674E-03	.0769	3.388E-03	.0975	3.716E-03	.1069	2.187E-03
T	9027(250)	24.00	22.75	2.611E-03	.0752	3.309E-03	.0952	3.629E-03	.1045	2.133E-03
T	9028(250)	25.03	23.78	2.554E-03	.0735	3.237E-03	.0931	3.550E-03	.1021	2.089E-03

****
* UNCLASSIFIED *
****

8/21/74

NASA-RI STS OH25A

V418-83A

AEDC(ARO,INC.) ARNOLD AFS, TENNESSEE
VON KARMAN GAS DYNAMICS FACILITY
50 INCH HYPERSONIC TUNNEL A

GROUP	CONFIG	MODEL	MACH NO	PO(PSIA)	TO(DEG R)	ALPHA-MODEL	ALPHA-SECTOR	ALPHA-PREBEND	ROLL-MODEL	YAW
60	5	TRANSITION	7.98	431.7	1299	40.03	-10.03	30.00	180.00	-.00

T-INF (DEG R)	P-INF (PSIA)	Q-INF (PSIA)	V-INF (FT/SEC)	RHO-INF (SLUGS/FT3)	MU-INF (LB-SEC/FT2)	RE/FT (FT-1)	HREF (R= .0175FT)	STREF (R= .0175FT)
96.6	[illegible]	2.004	3803	3.987E-05	7.614E-08	1.991E 06	3.476E-02	2.887E-02

CAMERA TOF(T)	ROLL NO	PAINT TEMP (DEG F)	INITIAL TEMP (DEG F)	SQUARE ROOT (RHOXCXK)	TBAR(TO)	BETA(TO)
	376	250	87	.0535	2.167E-01	2.3280E-01

PIC NO	TIME	DELTIME	H(TO)	H(TO)/HREF	H(.9TO)	H(.9TO)/HREF	H(.867TO)	H(.867TO)/HREF	ST(TO)
	25.35		MODEL HAS LEFT CENTERLINE						
T 9029(250)	26.08	24.83	2.500E-03	.0719	3.167E-03	.0911	3.474E-03	.1000	2.045E-03

160

PRECEDING PAGE BLANK NOT FILMED

****
* UNCLASSIFIED *
****

GROUP 61
0370 - 9104

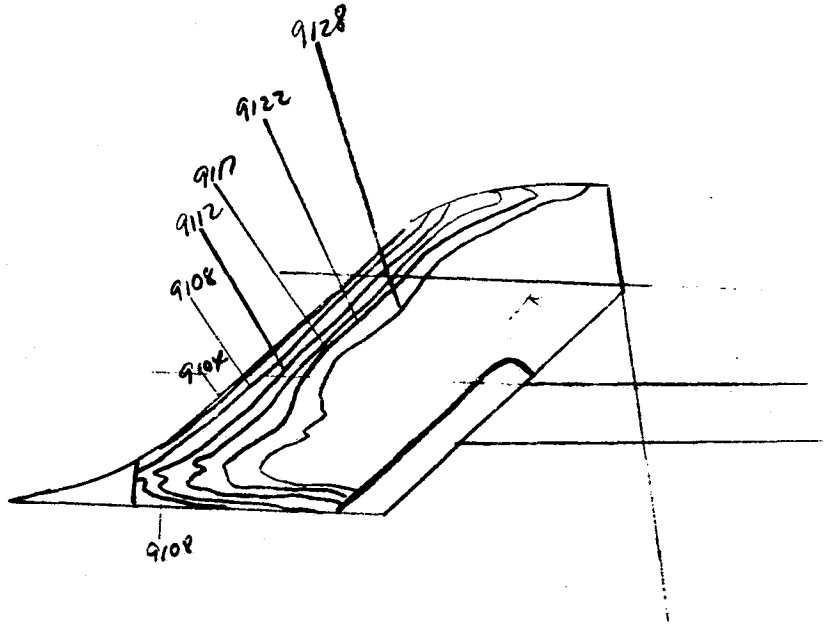

GROUP 61
0370 - 9104

8/21/74

NASA-RI STS OH25A

V418-83A

AEDC(ARO,INC.) ARNOLD AFS, TENNESSEE
VON KARMAN GAS DYNAMICS FACILITY
50 INCH HYPERSONIC TUNNEL H

GROUP	CONFIG	MODEL	MACH NO	PO(PSIA)	TO(DEG R)	ALPHA-MODEL	ALPHA-SECTOR	ALPHA-PREBEND	ROLL-MODEL	YAW
61	6	L R.C.=ING	7.98	431.8	1299	40.02	-.02	40.00	180.00	-.00

T-INF (DEG R)	P-INF (PSIA)	Q-INF (PSIA)	V-INF (FT/SEC)	RHO-INF (SLUGS/FT3)	MU-INF (LB-SEC/FT2)	RE/FT (FT-1)	HREF (R= .0175FT)	STREF (R= .0175FT)
94.6	.045	2.004	3803	3.988E-05	7.614E-08	1.592E 06	3.476E-02	2.886E-02

CAMERA	ROLL NO	PAINT TEMP (DEG F)	INITIAL TEMP (DEG F)	SQUARE ROOT (RHOXCXK)	TRAR(TO)	BETA(TO)
TOP(T)	370	350	81	.0550	0	0

	PIC NO	TIME	DELTIME	H(TO)	H(TO)/HREF	H(.9TO)	H(.9TO)/HREF	H(.867TO)	H(.867TO)/HREF	ST(TO)
T	9101(350)	.03		MODEL HAS NOT REACHED CENTERLINE						
T	9102(350)	1.00		MODEL HAS NOT REACHED CENTERLINE						
T	9103(350)	2.03		MODEL HAS NOT REACHED CENTERLINE						
INJECT TIME =		2.19								
T	9104(350)	3.05	1.83	1.808E-02	.5198	2.403E-02	.6909	2.698E-02	.7760	1.469E-02
T	9105(350)	4.10	2.88	1.441E-02	.4142	1.915E-02	.5506	2.151E-02	.6184	1.171E-02
T	9106(350)	5.16	3.93	1.233E-02	.3546	1.639E-02	.4713	1.841E-02	.5293	1.002E-02
T	9107(350)	6.18	4.96	1.098E-02	.3157	1.460E-02	.4196	1.640E-02	.4713	8.920E-03
T	9108(350)	7.23	6.01	9.977E-03	.2868	1.326E-02	.3812	1.489E-02	.4282	8.107E-03
T	9109(350)	8.28	7.06	9.205E-03	.2646	1.223E-02	.3517	1.374E-02	.3950	7.478E-03
T	9110(350)	9.34	8.11	8.588E-03	.2469	1.141E-02	.3282	1.282E-02	.3686	6.979E-03
T	9111(350)	10.39	9.16	8.080E-03	.2323	1.074E-02	.3087	1.206E-02	.3467	6.561E-03
T	9112(350)	11.44	10.22	7.653E-03	.2200	1.017E-02	.2923	1.142E-02	.3283	6.213E-03
T	9113(350)	12.49	11.27	7.267E-03	.2095	9.686E-03	.2784	1.088E-02	.3127	5.918E-03
T	9114(350)	13.54	12.32	6.970E-03	.2003	9.263E-03	.2662	1.040E-02	.2990	5.658E-03
T	9115(350)	14.59	13.37	6.690E-03	.1923	8.892E-03	.2556	9.986E-03	.2870	5.433E-03
T	9116(350)	15.64	14.42	6.441E-03	.1851	8.561E-03	.2460	9.616E-03	.2763	5.228E-03
T	9117(350)	16.69	15.47	6.219E-03	.1787	8.265E-03	.2375	9.283E-03	.2668	5.048E-03
T	9118(350)	17.75	16.52	6.018E-03	.1729	7.998E-03	.2298	8.983E-03	.2581	4.884E-03
T	9119(350)	18.77	17.55	5.839E-03	.1678	7.761E-03	.2230	8.716E-03	.2504	4.739E-03
T	9120(350)	19.82	18.60	5.672E-03	.1629	7.538E-03	.2166	8.467E-03	.2432	4.602E-03
T	9121(350)	20.87	19.65	5.518E-03	.1585	7.334E-03	.2107	8.237E-03	.2366	4.475E-03
T	9122(350)	21.93	20.70	5.376E-03	.1544	7.145E-03	.2053	8.025E-03	.2305	4.361E-03
T	9123(350)	22.98	21.75	5.245E-03	.1506	6.971E-03	.2002	7.829E-03	.2249	4.255E-03
T	9124(350)	24.03	22.81	5.122E-03	.1471	6.808E-03	.1955	7.646E-03	.2196	4.154E-03
T	9125(350)	25.68	24.46	4.946E-03	.1421	6.574E-03	.1888	7.384E-03	.2121	4.010E-03

```
                                        ****************
                                        * UNCLASSIFIED *
                                        ****************
                                            8/21/74

NASA-RI STS OH25A                    AEDC(ARO,INC.) ARNOLD AFS, TENNESSEE
                                      VON KARMAN GAS DYNAMICS FACILITY
V418-83A                                 50 INCH HYPERSONIC TUNNEL B

GROUP  CONFIG    MODEL      MACH NO    PO(PSIA)  TO(DEG R)  ALPHA-MODEL  ALPHA-SECTOR  ALPHA-PREBEND  ROLL-MODEL  YAW
 61      6    L R.C.WING      7.98      433.2      1299        40.02         -.02          40.00        180.00      -.00

 T-INF    P-INF   Q-INF   V-INF     RHO-INF      MU-INF        RE/FT      HREF          STREF
(DEG R)  (PSIA)  (PSIA)  (FT/SEC)  (SLUGS/FT3)  (LB-SEC/FT2)  (FT-1)     (R= .0175FT)  (R= .0175FT)
 94.6     .045   2.010    3803     4.000E-05    7.615E-08   1.998E 06   3.482E-02     2.882E-02

CAMERA        ROLL NO  PAINT TEMP (DEG F)   INITIAL TEMP (DEG F)   SQUARE ROOT (RHOXCXK)    TBAR(TO)   BETA(TO)
TOP(T)          370
                          350                  81                   .0550                   3.548E-01  4.4475E-01

   PIC NO      TIME DELTIME      H(TO)      H(TO)/HREF   H(.9TO)    H(.9TO)/HREF H( .867TO)  H( .867TO)/HREF  ST(TO)
              26.48            MODEL HAS LEFT CENTERLINE
T  9126(350) 26.73  25.51      4.843E-03     .1391     6.437E-03      .1849      7.230E-03      .2076      3.926E-03
T  9127(350) 27.78  26.56      4.746E-03     .1363     6.308E-03      .1812      7.085E-03      .2035      3.848E-03
      ERROR IN POWRE  BASE<0      A = 5777267017143077 CALL FROM 72651
```

GROUP 62
0370-9133

ORIGINAL PAGE IS
OF POOR QUALITY

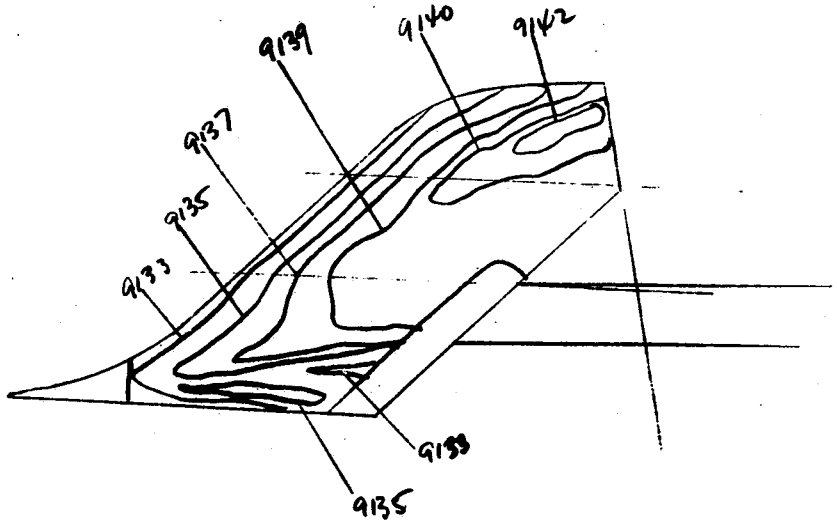

```
                                        ****************
                                        * UNCLASSIFIED *
                                        ****************
                                              8/21/74

NASA-RI STS OH25A                  AEDC(ARO,INC.) ARNOLD AFS, TENNESSEE
                                   VON KARMAN GAS DYNAMICS FACILITY
V419-83A                              50 INCH HYPERSONIC TUNNEL B

 GROUP  CONFIG    MODEL      MACH.NO    PO(PSIA)  TO(DEG R)  ALPHA-MODEL  ALPHA-SECTOR  ALPHA-PREBEND  ROLL-MODEL  YAW
  62      6    L F.C.WING     7.98       433.5      1300        40.02         -.02          40.00        180.00     -.00

 T-INF    P-INF    Q-INF    V-INF     RHO-INF      MU-INF        RE/FT      HREF          STREF
(DEG R)  (PSIA)   (PSIA)  (FT/SEC)  (SLUGS/FT3)  (LB-SEC/FT2)   (FT-1)    (R= .0175FT)  (R= .0175FT)
 94.6     .045    2.012     3804    4.001E-05    7.619E-08    1.998E 06   3.483E-02     2.882E-02

CAMERA      ROLL NO  PAINT TEMP (DEG F)   INITIAL TEMP (DEG F)   SQUARE ROOT (PHOXCXK)   TBAR(TO)   BETA(TO)
TOF(T)       370
                        250                    80                     .0535                    0          0

    PIC NO     TIME DELTIME     H(TO)      H(TO)/HREF   H(.9TO)    H(.9TO)/HREF H( .867TO)  H( .867TO)/HREF  ST(TO)
T  9130(250)   .03            MODEL HAS NOT REACHED CENTERLINE
T  9131(250)  1.00            MODEL HAS NOT REACHED CENTERLINE
T  9132(250)  2.03            MODEL HAS NOT REACHED CENTERLINE
INJECT TIME =      2.18
T  9133(250)  3.05   1.83    9.564E-03    .2745    1.211E-02    .3476     1.328E-02    .3812     7.790E-03
T  9134(250)  4.10   2.88    7.623E-03    .2188    9.653E-03    .2770     1.059E-02    .3038     6.207E-03
T  9135(250)  5.16   3.93    6.525E-03    .1873    8.263E-03    .2372     9.061E-03    .2601     5.315E-03
T  9136(250)  6.21   4.98    5.797E-03    .1663    7.340E-03    .2106     8.049E-03    .2310     4.720E-03
T  9137(250)  7.26   6.04    5.268E-03    .1512    6.671E-03    .1915     7.315E-03    .2099     4.290E-03
T  9138(250)  8.31   7.09    4.861E-03    .1395    6.156E-03    .1766     6.751E-03    .1937     3.957E-03
T  9139(250)  9.36   8.14    4.537E-03    .1302    5.745E-03    .1648     6.300E-03    .1807     3.693E-03
T  9140(250) 10.41   9.19    4.269E-03    .1225    5.406E-03    .1551     5.928E-03    .1701     3.476E-03
T  9141(250) 11.46  10.24    4.044E-03    .1160    5.121E-03    .1469     5.616E-03    .1611     3.291E-03
T  9142(250) 12.51  11.29    3.851E-03    .1105    4.877E-03    .1399     5.348E-03    .1534     3.134E-03
T  9143(250) 13.57  12.34    3.684E-03    .1057    4.665E-03    .1338     5.115E-03    .1468     2.999E-03
T  9144(250) 14.62  13.39    3.536E-03    .1015    4.478E-03    .1295     4.910E-03    .1409     2.878E-03
T  9145(250) 15.67  14.45    3.405E-03    .0977    4.312E-03    .1237     4.728E-03    .1356     2.769E-03
T  9146(250) 16.69  15.47    3.290E-03    .0943    4.167E-03    .1195     4.569E-03    .1310     2.675E-03
T  9147(250) 17.75  16.52    3.184E-03    .0913    4.032E-03    .1156     4.421E-03    .1268     2.588E-03
T  9148(250) 18.80  17.57    3.087E-03    .0886    3.909E-03    .1122     4.287E-03    .1230     2.507E-03
T  9149(250) 19.87  18.65    2.997E-03    .0860    3.795E-03    .1089     4.161E-03    .1194     2.439E-03
             20.47          MODEL HAS LEFT CENTERLINE
T  9150(250) 20.92  19.70    2.916E-03    .0836    3.692E-03    .1059     4.049E-03    .1161     2.370E-03
T  9151(250) 21.98  20.75    2.841E-03    .0815    3.598E-03    .1032     3.945E-03    .1132     2.312E-03
T  9152(250) 23.03  21.80    2.772E-03    .0795    3.510E-03    .1007     3.849E-03    .1104     2.255E-03
      ERROR IN FOWRF  BASE<0      A = 577716774037445 1 CALL FROM 72651
```

GROUP 63
0370-9156

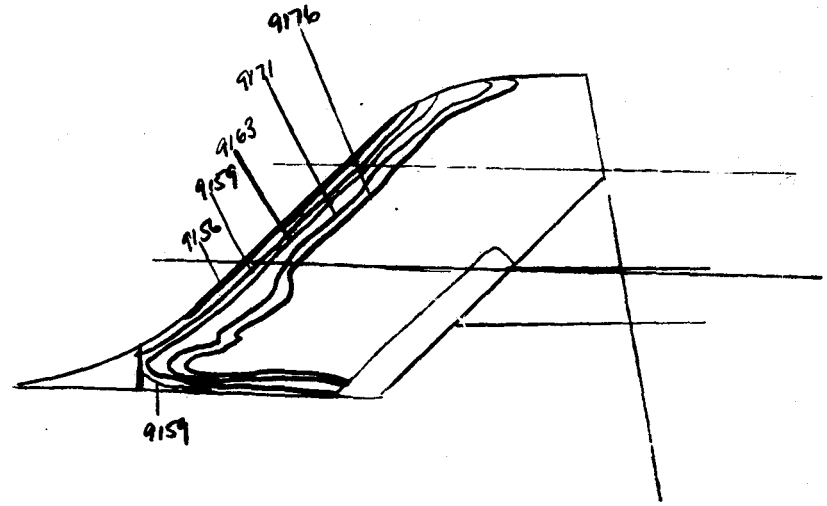

****
* UNCLASSIFIED *
****

8/21/74

NASA-RI STS OH25A

V41B-83A

AEDC(ARO,INC.) ARNOLD AFS, TENNESSEE
VON KARMAN GAS DYNAMICS FACILITY
50 INCH HYPERSONIC TUNNEL H

GROUP	CONFIG	MODEL	MACH NO	PO(PSIA)	TO(DEG R)	ALPHA-MODEL	ALPHA-SECTOR	ALPHA-PREBEND	ROLL-MODEL	YAW
63	6	L.F.C.WING	7.98	432.5	1300	30.03	9.97	40.00	180.00	-.00

T-INF (DEG R)	P-INF (PSIA)	Q-INF (PSIA)	V-INF (FT/SEC)	RHO-INF (SLUGS/FT3)	MU-INF (LB-SEC/FT2)	RE/FT (FT-1)	HREF (R= .0175FT)	SIREF (R= .0175FT)
94.6	.045	2.007	3804	3.992E-05	7.619E-08	1.993E 06	3.479E-02	2.885E-02

CAMERA TOP(T)	ROLL NO	PAINT TEMP (DEG F)	INITIAL TEMP (DEG F)	SQUARE ROOT (RHOXCXK)	TBAR(TO)	BETA(TO)
	370	350	81	.0550	0	0

	PIC NO	TIME	DELTIME	H(TO)	H(TO)/HREF	H(.9TO)	H(.9TO)/HREF	H(.867TO)	H(.867TO)/HREF	ST(TO)
T	9153(350)	0		MODEL HAS NOT REACHED CENTERLINE						
T	9154(350)	1.00		MODEL HAS NOT REACHED CENTERLINE						
T	9155(350)	2.03		MODEL HAS NOT REACHED CENTERLINE						
INJECT TIME =		2.33								
T	9156(350)	3.05	1.75	1.849E-02	.5315	2.458E-02	.7064	2.760E-02	.7933	1.502E-02
T	9157(350)	4.10	2.80	1.461E-02	.4198	1.942E-02	.5580	2.181E-02	.6266	1.186E-02
T	9158(350)	5.16	3.86	1.246E-02	.3579	1.656E-02	.4757	1.859E-02	.5342	1.011E-02
T	9159(350)	6.21	4.90	1.104E-02	.3172	1.467E-02	.4216	1.646E-02	.4734	8.961E-03
T	9160(350)	7.26	5.95	1.002E-02	.2879	1.331E-02	.3826	1.495E-02	.4296	8.133E-03
T	9161(350)	8.31	7.00	9.235E-03	.2653	1.227E-02	.3526	1.378E-02	.3960	7.496E-03
T	9162(350)	9.36	8.05	8.611E-03	.2474	1.144E-02	.3289	1.285E-02	.3693	6.991E-03
T	9163(350)	10.41	9.11	8.099E-03	.2327	1.076E-02	.3093	1.209E-02	.3473	6.574E-03
T	9164(350)	11.46	10.16	7.669E-03	.2203	1.019E-02	.2928	1.144E-02	.3287	6.222E-03
T	9165(350)	12.51	11.21	7.300E-03	.2097	9.702E-03	.2787	1.089E-02	.3130	5.923E-03
T	9166(350)	13.57	12.26	6.960E-03	.2005	9.277E-03	.2664	1.042E-02	.2992	5.662E-03
T	9167(350)	14.62	13.31	6.699E-03	.1924	8.903E-03	.2558	9.997E-03	.2872	5.436E-03
T	9168(350)	15.67	14.36	6.449E-03	.1853	8.571E-03	.2462	9.625E-03	.2765	5.233E-03
T	9169(350)	16.72	15.41	6.225E-03	.1788	8.273E-03	.2376	9.291E-03	.2669	5.050E-03
T	9170(350)	17.77	16.46	6.023E-03	.1730	8.005E-03	.2299	8.989E-03	.2582	4.887E-03
T	9171(350)	18.82	17.51	5.840E-03	.1677	7.761E-03	.2228	8.715E-03	.2502	4.733E-03
T	9172(350)	19.87	18.57	5.672E-03	.1629	7.538E-03	.2165	8.465E-03	.2431	4.599E-03
T	9173(350)	20.92	19.62	5.518E-03	.1585	7.333E-03	.2106	8.235E-03	.2365	4.474E-03
T	9174(350)	21.98	20.67	5.376E-03	.1544	7.144E-03	.2052	8.023E-03	.2304	4.360E-03
T	9175(350)	23.03	21.72	5.244E-03	.1506	6.969E-03	.2001	7.826E-03	.2247	4.250E-03
T	9176(350)	24.08	22.77	5.121E-03	.1470	6.807E-03	.1954	7.643E-03	.2194	4.150E-03
		24.58		MODEL HAS LEFT CENTERLINE						

****
* UNCLASSIFIED *
****
8/21/74

NASA-RI STS OH25A

V418-83A

AEDC(ARO,INC.) ARNOLD AFS, TENNESSEE
VON KARMAN GAS DYNAMICS FACILITY
50 INCH HYPERSONIC TUNNEL A

GROUP	CONFIG	MODEL	MACH NO	PO(PSIA)	TO(DEG R)	ALPHA-MODEL	ALPHA-SECTOR	ALPHA-PREBEND	ROLL-MODEL	YAW
63	6	L.R.C.WING	7.98	433.4	1300	30.03	9.97	40.00	180.00	-.00

T-INF (DEG R)	P-INF (PSIA)	Q-INF (PSIA)	V-INF (FT/SEC)	RHO-INF (SLUGS/FT3)	MU-INF (LB-SEC/FT2)	RE/FT (FT-1)	HREF (R= .0175FT)	STREF (R= .0175FT)
94.6	.045	2.011	3804	4.001E-05	7.618E-08	1.997E 06	3.483E-02	2.882E-02

CAMERA	ROLL NO	PAINT TEMP (DEG F)	INITIAL TEMP (DEG F)	SQUARE ROOT (RHOXCXK)	TBAR(TO)	BETA(TO)
TOP(T)	370	350	81	.0550	3.546E-01	4.4435E-01

	PIC NO	TIME	DELTIME	H(TO)	H(TO)/HREF	H(.9TO)	H(.9TO)/HREF	H(.867TO)	H(.867TO)/HREF	ST(TO)
T	9177(350)	25.13	23.82	5.007E-03	.1437	6.655E-03	.1910	7.473E-03	.2145	4.058E-03
T	9178(350)	26.18	24.87	4.900E-03	.1407	6.512E-03	.1870	7.313E-03	.2100	3.974E-03
T	9179(350)	27.23	25.92	4.800E-03	.1377	6.379E-03	.1830	7.163E-03	.2055	3.885E-03
T	9180(350)	28.28	26.98	4.705E-03	.1351	6.254E-03	.1795	7.023E-03	.2016	3.814E-03
T	9181(350)	29.33	28.03	4.616E-03	.1325	6.135E-03	.1762	6.890E-03	.1978	3.742E-03
T	9182(350)	30.38	29.08	4.532E-03	.1301	6.023E-03	.1729	6.764E-03	.1941	3.671E-03
T	9183(350)	31.44	30.13	4.452E-03	.1278	5.917E-03	.1699	6.645E-03	.1908	3.608E-03
T	9184(350)	32.49	31.18	4.377E-03	.1257	5.817E-03	.1670	6.532E-03	.1876	3.548E-03
T	9185(350)	33.54	32.23	4.305E-03	.1235	5.721E-03	.1642	6.424E-03	.1844	3.485E-03
T	9186(350)	34.59	33.28	4.236E-03	.1216	5.630E-03	.1616	6.322E-03	.1814	3.430E-03

* ERROR IN FOWRF BASE<0 A = 5777167657353043 CALL FROM 72651

GROUP 64
0370-9190

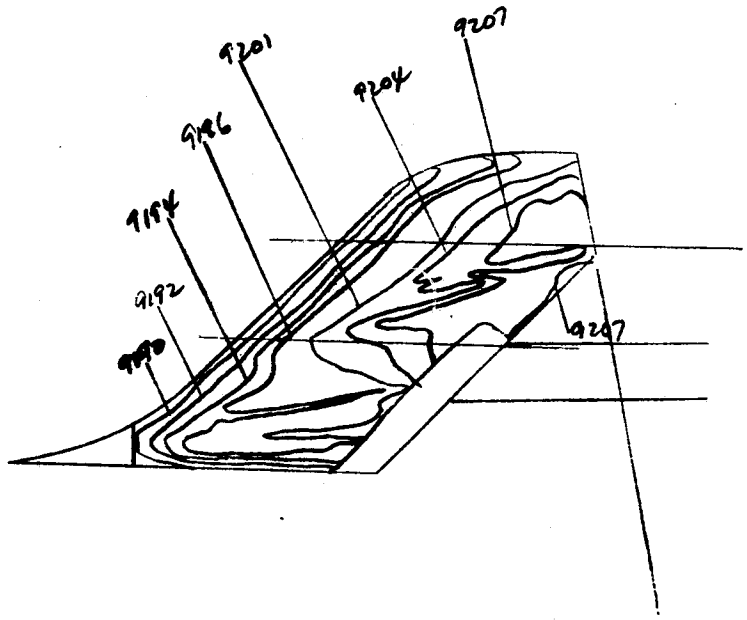

GROUP 64
0370-9190

8/21/74

NASA-RI STS OH25A

V418-83A

AEDC(ARO,INC.) ARNOLD AFS, TENNESSEE
VON KARMAN GAS DYNAMICS FACILITY
50 INCH HYPERSONIC TUNNEL B

GROUP	CONFIG	MODEL	MACH NO	PO(PSIA)	TO(DEG R)	ALPHA-MODEL	ALPHA-SECTOR	ALPHA-PREHEND	ROLL-MODEL	YAW
64	6	L F.C.WING	7.98	430.4	1298	30.01	9.99	40.00	180.00	-.00

T-INF (DEG R)	P-INF (PSIA)	Q-INF (PSIA)	V-INF (FT/SEC)	RHO-INF (SLUGS/FT3)	MU-INF (LB-SEC/FT2)	RE/FT (FT-1)	HREF (H= .0175FT)	STREF (H= .0175FT)
94.5	.045	1.998	3801	3.978E-05	7.609E-08	1.987E 06	3.470E-02	2.890E-02

CAMERA TOP(T)	ROLL NO	PAINT TEMP (DEG F)	INITIAL TEMP (DEG F)	SQUARE ROOT (RHOACXK)	TBAR(TO)	BETA(TO)
	370	250	79	.0535	0	0

	PIC NO	TIME	DELTIME	H(TO)	H(TO)/HREF	H(.9TO)	H(.9TO)/HREF	H(.867TO)	H(.867TO)/HREF	ST(TO)
T	9187(250)	.03		MODEL HAS NOT REACHED CENTERLINE						
T	9188(250)	1.00		MODEL HAS NOT REACHED CENTERLINE						
T	9189(250)	2.03		MODEL HAS NOT REACHED CENTERLINE						
INJECT TIME =		2.28								
T	9190(250)	3.08	1.80	9.738E-03	.2806	1.234E-02	.3555	1.353E-02	.3899	7.984E-03
T	9191(250)	4.10	2.83	7.771E-03	.2240	9.845E-03	.2837	1.080E-02	.3112	6.375E-03
T	9192(250)	5.16	3.88	6.635E-03	.1912	8.405E-03	.2422	9.220E-03	.2657	5.440E-03
T	9193(250)	6.21	4.93	5.885E-03	.1696	7.455E-03	.2149	8.178E-03	.2357	4.829E-03
T	9194(250)	7.26	5.98	5.342E-03	.1539	6.768E-03	.1950	7.424E-03	.2139	4.380E-03
T	9195(250)	8.31	7.03	4.927E-03	.1419	6.242E-03	.1798	6.847E-03	.1972	4.037E-03
T	9196(250)	9.36	8.08	4.595E-03	.1324	5.822E-03	.1678	6.386E-03	.1840	3.768E-03
T	9197(250)	10.41	9.13	4.323E-03	.1245	5.477E-03	.1578	6.007E-03	.1731	3.543E-03
T	9198(250)	11.46	10.18	4.094E-03	.1180	5.186E-03	.1494	5.689E-03	.1639	3.357E-03
T	9199(250)	12.51	11.24	3.897E-03	.1123	4.938E-03	.1422	5.416E-03	.1560	3.194E-03
T	9200(250)	13.57	12.29	3.727E-03	.1074	4.722E-03	.1361	5.179E-03	.1492	3.056E-03
T	9201(250)	14.62	13.34	3.577E-03	.1031	4.532E-03	.1306	4.971E-03	.1433	2.934E-03
T	9202(250)	15.67	14.39	3.444E-03	.0992	4.363E-03	.1257	4.786E-03	.1379	2.822E-03
T	9203(250)	16.69	15.42	3.327E-03	.0959	4.215E-03	.1214	4.624E-03	.1332	2.727E-03
T	9204(250)	17.75	16.47	3.219E-03	.0927	4.079E-03	.1175	4.474E-03	.1289	2.637E-03
T	9205(250)	18.80	17.52	3.121E-03	.0899	3.954E-03	.1139	4.338E-03	.1249	2.556E-03
T	9206(250)	19.87	18.59	3.030E-03	.0873	3.838E-03	.1105	4.210E-03	.1213	2.482E-03
T	9207(250)	20.90	19.62	2.949E-03	.0849	3.737E-03	.1076	4.094E-03	.1180	2.415E-03
T	9208(250)	21.95	20.67	2.873E-03	.0828	3.640E-03	.1049	3.993E-03	.1150	2.355E-03
T	9209(250)	23.00	21.72	2.803E-03	.0807	3.551E-03	.1023	3.895E-03	.1122	2.295E-03
T	9210(250)	24.05	22.77	2.738E-03	.0790	3.468E-03	.1001	3.804E-03	.1098	2.231E-03
T	9211(250)	25.10	23.83	2.676E-03	.0771	3.391E-03	.0976	3.719E-03	.1071	2.192E-03

****
* UNCLASSIFIED *
****

8/21/74

NASA-RI STS OH25A

V418-83A

AEDC(ARO,INC.) ARNOLD AFS, TENNESSEE
VON KARMAN GAS DYNAMICS FACILITY
50 INCH HYPERSONIC TUNNEL B

GROUP	CONFIG	MODEL	MACH NO	PO(PSIA)	TO(DEG R)	ALPHA-MODEL	ALPHA-SECTOR	ALPHA-PREHEND	ROLL-MODEL	YAW
64	6	L F.C.WING	7.98	431.1	1298	30.01	9.99	40.00	180.00	-.00

T-INF (DEG R)	P-INF (PSIA)	Q-INF (PSIA)	V-INF (FT/SEC)	RHO-INF (SLUGS/FT3)	MU-INF (LB-SEC/FT2)	RE/FT (FT-1)	HREF (R= .0175FT)	STREF (R= .0175FT)
94.5	.045	2.001	3801	3.985E-05	7.609E-08	1.991E 06	3.473E-02	2.887E-02

CAMERA	ROLL NO	PAINT TEMP (DEG F)	INITIAL TEMP (DEG F)	SQUARE ROOT (RHOXCXK)	TBAR(TO)	BETA(TO)
TOP(T)	370	250	79	.0535	2.253E-01	2.4419E-01

PIC NO	TIME	DELTIME	H(TO)	H(TO)/HREF	H(.9TO)	H(.9TO)/HREF	H(.867TO)	H(.867TO)/HREF	ST(TO)
	25.70		MODEL HAS LEFT CENTERLINE						
T 9212(250)	26.16	24.88	2.619E-03	.0754	3.318E-03	.0955	3.640E-03	.1048	2.145E-03

****
* UNCLASSIFIED *
****

Group 65
0370-9216

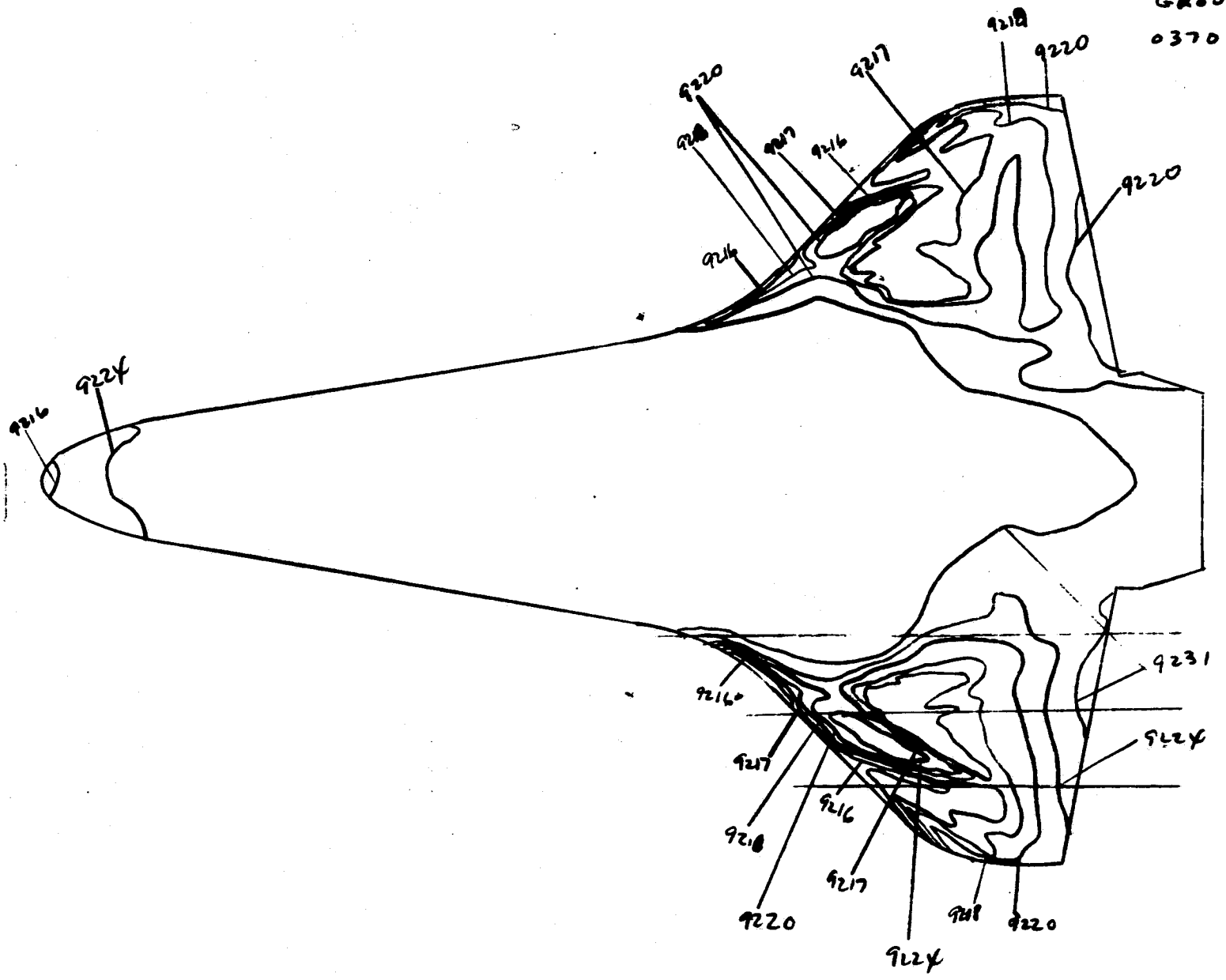

8/21/74

NASA-RI STS OH25A

V418-83A

AEDC(ARO,INC.) ARNOLD AFS, TENNESSEE
VON KARMAN GAS DYNAMICS FACILITY
50 INCH HYPERSONIC TUNNEL B

GROUP	CONFIG	MODEL	MACH NO	PO(PSIA)	TO(DEG R)	ALPHA-MODEL	ALPHA-SECTOR	ALPHA-PREHEND	ROLL-MODEL	YAW
65	1	ORBITER	8.00	863.2	1366	30.03	-.03	30.00	180.00	-.00

T-INF (DEG R)	P-INF (PSIA)	Q-INF (PSIA)	V-INF (FT/SEC)	RHO-INF (SLUGS/FT3)	MU-INF (LB-SEC/FT2)	RE/FT (FT-1)	HREF (R= .0175FT)	STREF (R= .0175FT)
99.0	.088	3.961	3900	7.494E-05	7.969E-08	3.668E 06	4.930E-02	2.116E-02

CAMERA	ROLL NO	PAINT TEMP (DEG F)	INITIAL TEMP (DEG F)	SQUARE ROOT (RHOXCXK)	TBAR(TO)	BETA(TO)
TOP(T)	370	400	81	.0555	0	0

	PIC NO	TIME	DELTIME	H(TO)	H(TO)/HREF	H(.9TO)	H(.9TO)/HREF	H(.867TO)	H(.867TO)/HREF	ST(TO)
T	9213(400)	.03		MODEL HAS NOT REACHED CENTERLINE						
T	9214(400)	1.00		MODEL HAS NOT REACHED CENTERLINE						
T	9215(400)	2.03		MODEL HAS NOT REACHED CENTERLINE						
INJECT TIME =		2.18								
T	9216(400)	3.08	1.86	2.055E-02	.4168	2.742E-02	.5561	3.085E-02	.6258	8.619E-03
T	9217(400)	4.13	2.91	1.642E-02	.3332	2.191E-02	.4445	2.465E-02	.5003	6.894E-03
T	9218(400)	5.16	3.93	1.412E-02	.2863	1.883E-02	.3819	2.119E-02	.4298	5.918E-03
T	9219(400)	6.21	4.98	1.254E-02	.2543	1.673E-02	.3392	1.883E-02	.3817	5.255E-03
T	9220(400)	7.26	6.04	1.140E-02	.2311	1.520E-02	.3083	1.711E-02	.3469	4.777E-03
T	9221(400)	8.31	7.09	1.052E-02	.2133	1.403E-02	.2846	1.579E-02	.3202	4.410E-03
T	9222(400)	9.36	8.14	9.815E-03	.1990	1.309E-02	.2655	1.473E-02	.2988	4.115E-03
T	9223(400)	10.41	9.19	9.236E-03	.1873	1.232E-02	.2499	1.387E-02	.2812	3.873E-03
T	9224(400)	11.46	10.24	8.749E-03	.1774	1.167E-02	.2366	1.313E-02	.2663	3.666E-03
T	9225(400)	12.51	11.29	8.332E-03	.1690	1.112E-02	.2254	1.251E-02	.2537	3.494E-03
T	9226(400)	13.57	12.34	7.969E-03	.1616	1.063E-02	.2156	1.196E-02	.2426	3.341E-03
T	9227(400)	14.57	13.34	7.665E-03	.1555	1.022E-02	.2074	1.151E-02	.2334	3.216E-03
T	9228(400)	15.62	14.40	7.360E-03	.1496	9.844E-03	.1996	1.108E-02	.2246	3.091E-03
T	9229(400)	16.67	15.45	7.124E-03	.1445	9.504E-03	.1928	1.069E-02	.2169	2.988E-03
T	9230(400)	17.72	16.50	6.893E-03	.1397	9.196E-03	.1863	1.035E-02	.2097	2.885E-03
T	9231(400)	18.77	17.55	6.684E-03	.1355	8.916E-03	.1807	1.003E-02	.2034	2.800E-03
T	9232(400)	19.82	18.60	6.492E-03	.1316	8.661E-03	.1756	9.746E-03	.1976	2.721E-03
T	9233(400)	20.87	19.65	6.316E-03	.1281	8.426E-03	.1709	9.482E-03	.1923	2.648E-03
T	9234(400)	21.93	20.70	6.154E-03	.1248	8.209E-03	.1664	9.238E-03	.1873	2.578E-03
T	9235(400)	22.98	21.75	6.003E-03	.1217	8.008E-03	.1623	9.012E-03	.1827	2.514E-03
		23.30		MODEL HAS LEFT CENTERLINE						
T	9236(400)	24.03	22.81	5.863E-03	.1189	7.822E-03	.1587	8.802E-03	.1786	2.460E-03

```
                                    ****************
                                    * UNCLASSIFIED *
                                    ****************
                                          8/21/74

NASA-RI STS OH25A                  AEDC(ARO,INC.) ARNOLD AFS, TENNESSEE
                                    VON KARMAN GAS DYNAMICS FACILITY
V41B-83A                               50 INCH HYPERSONIC TUNNEL B

GROUP  CONFIG    MODEL      MACH NO    PO(PSIA)  TO(DEG R)  ALPHA-MODEL  ALPHA-SECTOR  ALPHA-PREBEND  ROLL-MODEL  YAW
  65      1    ORBITER        8.00      863.0      1366        30.03         -.03         30.00        180.00      -.00

 T-INF    P-INF    Q-INF    V-INF     RHO-INF      MU-INF        RE/FT      HREF          STREF
(DEG R)  (PSIA)   (PSIA)   (FT/SEC)  (SLUGS/FT3)  (LB-SEC/FT2)  (FT-1)     (R= .0175FT)  (R= .0175FT)
 99.0      .088    3.960    3900     7.493E-05    7.969E-08   3.667E 06   4.929E-02     2.117E-02

CAMERA        ROLL NO  PAINT TEMP (DEG F)   INITIAL TEMP (DEG F)   SQUARE ROOT (RHOXCXK)    TBAR(TO)   BETA(TO)
TOP(T)          370
                          400                  81                   .0555                   3.866E-01  5.0448E-01

   PIC NO     TIME DELTIME      H(TO)      H(TO)/HREF   H(.9TO)     H(.9TO)/HREF H( .867TO)  H( .867TO)/HREF  ST(TO)
T  9237(400) 25.08  23.86     5.732E-03     .1163     7.647E-03      .1551       8.606E-03      .1745       2.404E-03
T  9238(400) 29.33  28.11     5.281E-03     .1070     7.045E-03      .1428       7.928E-03      .1607       2.212E-03
      ERROR IN POWRF  BASE<0      A = 6001000270734655 CALL FROM 72651
```

GROUP 6
0370 - 92

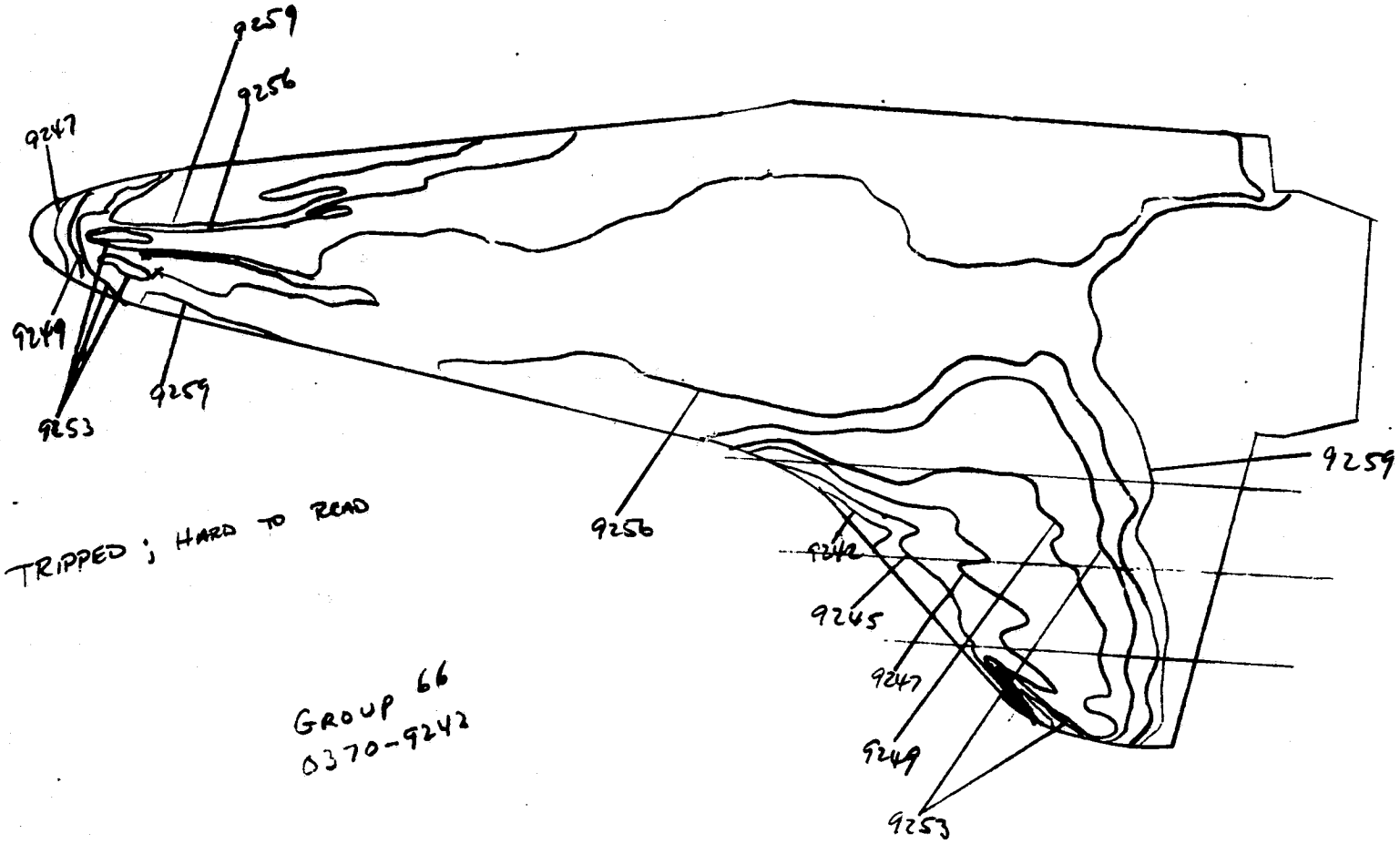

TRIPPED ; HARD TO READ

GROUP 66
0370-9242

****
* UNCLASSIFIED *
****

8/21/74

NASA-RI STS OH25A

V41A-83A

AEDC(ARO,INC.) ARNOLD AFS, TENNESSEE
VON KARMAN GAS DYNAMICS FACILITY
50 INCH HYPERSONIC TUNNEL A

GROUP	CONFIG	MODEL	MACH NO	PO(PSIA)	TO(DEG R)	ALPHA-MODEL	ALPHA-SECTOR	ALPHA-PREBEND	ROLL-MODEL	YAW
66	2	40 PERCENT	8.00	861.6	1361	30.02	-.02	30.00	180.00	-.00

T-INF (DEG R)	P-INF (PSIA)	Q-INF (PSIA)	V-INF (FT/SEC)	RHO-INF (SLUGS/FT3)	MU-INF (LB-SEC/FT2)	RE/FT (FT-1)	HREF (R= .0175FT)	STREF (H= .0175FT)
98.6	.088	3.954	3893	7.508E-05	7.939E-08	3.681E 06	4.922E-02	2.113E-02

CAMERA TOP(T)	ROLL NO	PAINT TEMP (DEG F)	INITIAL TEMP (DEG F)	SQUARE ROOT (RHOXCXK)	TBAR(TO)	BETA(TO)
	370	500	81	.0542	0	0

	PIC NO	TIME	DELTIME	H(TO)	H(TO)/HREF	H(.9TO)	H(.9TO)/HREF	H(.867TO)	H(.867TO)/HREF	ST(TO)
T	9239(500)	.03		MODEL HAS NOT REACHED CENTERLINE						
T	9240(500)	1.00		MODEL HAS NOT REACHED CENTERLINE						
T	9241(500)	2.03		MODEL HAS NOT REACHED CENTERLINE						
INJECT TIME =		2.23								
T	9242(500)	3.08	1.83	3.208E-02	.6516	4.653E-02	.9451	5.490E-02	1.1152	1.338E-02
T	9243(500)	4.10	2.85	2.567E-02	.5214	3.724E-02	.7563	4.394E-02	.8924	1.071E-02
T	9244(500)	5.16	3.91	2.195E-02	.4458	3.184E-02	.6467	3.756E-02	.7630	9.156E-03
T	9245(500)	6.21	4.96	1.948E-02	.3956	2.826E-02	.5739	3.334E-02	.6771	8.122E-03
T	9246(500)	7.26	6.01	1.769E-02	.3595	2.567E-02	.5214	3.029E-02	.6153	7.382E-03
T	9247(500)	8.31	7.06	1.632E-02	.3316	2.368E-02	.4810	2.794E-02	.5675	6.809E-03
T	9248(500)	9.34	8.09	1.525E-02	.3097	2.213E-02	.4493	2.611E-02	.5302	6.360E-03
T	9249(500)	10.39	9.14	1.435E-02	.2914	2.081E-02	.4227	2.456E-02	.4988	5.984E-03
T	9250(500)	11.44	10.19	1.359E-02	.2758	1.971E-02	.4001	2.326E-02	.4721	5.661E-03
T	9251(500)	12.49	11.24	1.294E-02	.2626	1.877E-02	.3809	2.214E-02	.4495	5.389E-03
T	9252(500)	13.54	12.29	1.237E-02	.2513	1.795E-02	.3646	2.117E-02	.4302	5.163E-03
T	9253(500)	14.59	13.34	1.187E-02	.2412	1.722E-02	.3498	2.032E-02	.4128	4.953E-03
T	9254(500)	15.64	14.39	1.143E-02	.2321	1.658E-02	.3367	1.957E-02	.3973	4.765E-03
T	9255(500)	16.69	15.44	1.104E-02	.2242	1.601E-02	.3252	1.889E-02	.3837	4.604E-03
T	9256(500)	17.72	16.47	1.069E-02	.2170	1.550E-02	.3148	1.829E-02	.3714	4.455E-03
T	9257(500)	18.77	17.52	1.036E-02	.2103	1.503E-02	.3051	1.773E-02	.3600	4.316E-03
T	9258(500)	19.82	18.57	1.006E-02	.2043	1.460E-02	.2963	1.723E-02	.3496	4.192E-03
		20.17		MODEL HAS LEFT CENTERLINE						
T	9259(500)	20.87	19.62	9.791E-03	.1988	1.420E-02	.2883	1.676E-02	.3402	4.080E-03
T	9260(500)	21.93	20.67	9.538E-03	.1936	1.384E-02	.2809	1.633E-02	.3314	3.974E-03

ERROR IN POWRF BASE<0 A = 6001000117201053 CALL FROM 72651

GROUP 67
0370 - 9264

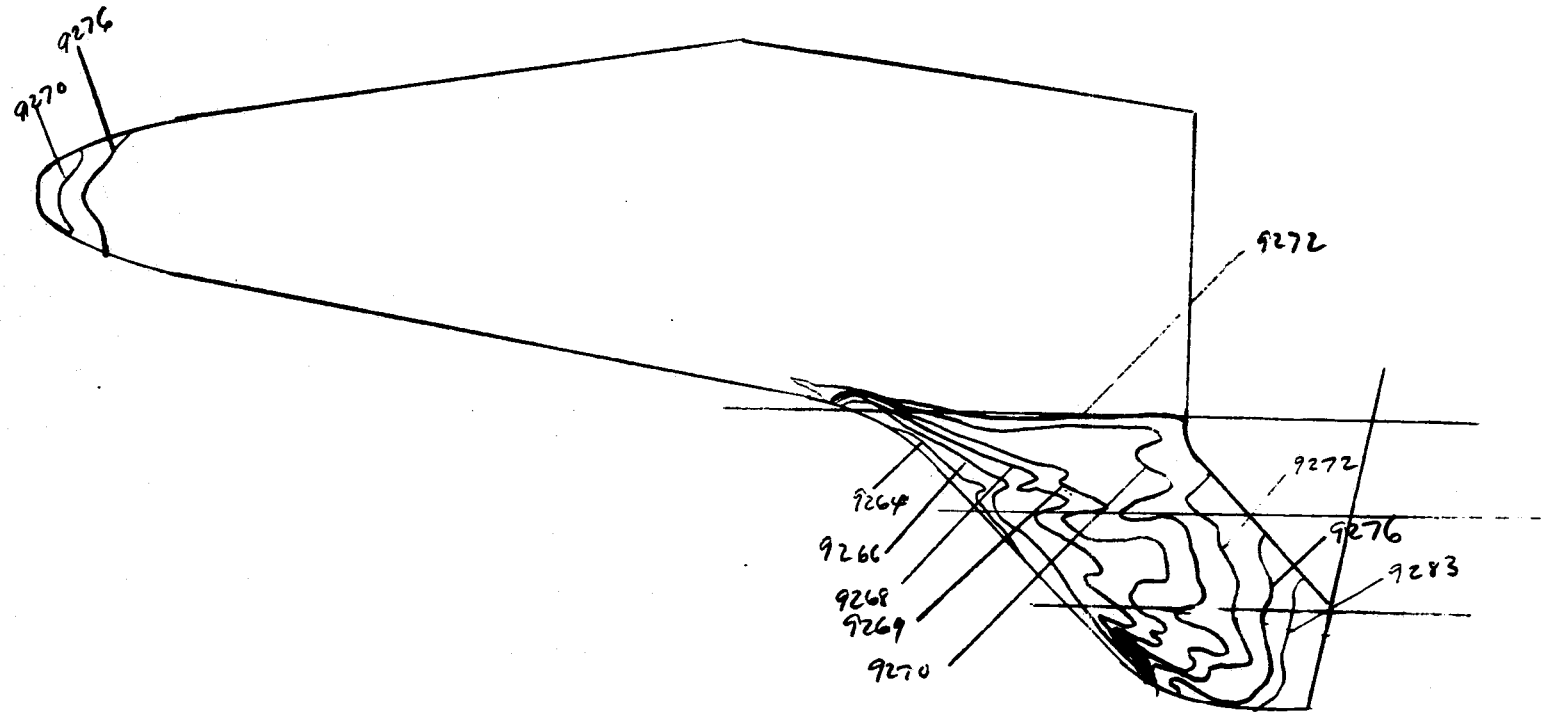

GROUP 67
0370 - 9264

8/21/74

NASA-RI STS OH25A

V41B-83A

AEDC(ARO,INC.) ARNOLD AFS, TENNESSEE
VON KARMAN GAS DYNAMICS FACILITY
50 INCH HYPERSONIC TUNNEL B

GROUP	CONFIG	MODEL	MACH NO	PO(PSIA)	TO(DEG R)	ALPHA-MODEL	ALPHA-SECTOR	ALPHA-PREBEND	ROLL-MODEL	YAW
67	4	LEADING EDGE	8.00	858.5	1361	30.01	-.01	30.00	180.00	-.00

T-INF (DEG R)	P-INF (PSIA)	Q-INF (PSIA)	V-INF (FT/SEC)	RHO-INF (SLUGS/FT3)	MU-INF (LB-SEC/FT2)	RE/FT (FT-1)	HREF (R= .0175FT)	STREF (R= .0175FT)
98.6	.088	3.939	3893	7.479E-05	7.942E-08	3.666E 06	4.914E-02	2.118E-02

CAMERA	ROLL NO	PAINT TEMP (DEG F)	INITIAL TEMP (DEG F)	SQUARE ROOT (RHOXCAK)	TBAR(TO)	BETA(TO)
TOP(T)	370	500	85	.0542	0	0

	PIC NO	TIME	DELTIME	H(TO)	H(TO)/HREF	H(.9TO)	H(.9TO)/HREF	H(.867TO)	H(.867TO)/HREF	ST(TO)
T	9261(500)	.03		MODEL HAS NOT REACHED CENTERLINE						
T	9262(500)	1.00		MODEL HAS NOT REACHED CENTERLINE						
T	9263(500)	2.03		MODEL HAS NOT REACHED CENTERLINE						
INJECT TIME =		2.18								
T	9264(500)	3.08	1.86	3.154E-02	.6424	4.574E-02	.9317	5.396E-02	1.0993	1.324E-02
T	9265(500)	4.10	2.88	2.531E-02	.5153	3.670E-02	.7474	4.330E-02	.8818	1.061E-02
T	9266(500)	5.16	3.93	2.166E-02	.4413	3.142E-02	.6400	3.707E-02	.7551	9.092E-03
T	9267(500)	6.21	4.98	1.924E-02	.3920	2.791E-02	.5685	3.293E-02	.6707	8.076E-03
T	9268(500)	7.26	6.04	1.749E-02	.3561	2.536E-02	.5165	2.992E-02	.6094	7.335E-03
T	9269(500)	8.31	7.09	1.614E-02	.3286	2.341E-02	.4766	2.762E-02	.5623	6.767E-03
T	9270(500)	9.36	8.14	1.506E-02	.3068	2.184E-02	.4450	2.577E-02	.5250	6.323E-03
T	9271(500)	10.41	9.19	1.417E-02	.2886	2.055E-02	.4185	2.425E-02	.4938	5.943E-03
T	9272(500)	11.46	10.24	1.343E-02	.2735	1.947E-02	.3966	2.297E-02	.4679	5.634E-03
T	9273(500)	12.51	11.29	1.279E-02	.2603	1.854E-02	.3776	2.188E-02	.4455	5.361E-03
T	9274(500)	13.54	12.32	1.224E-02	.2492	1.775E-02	.3615	2.095E-02	.4265	5.134E-03
T	9275(500)	14.59	13.37	1.175E-02	.2392	1.704E-02	.3469	2.011E-02	.4093	4.926E-03
T	9276(500)	15.64	14.42	1.131E-02	.2304	1.641E-02	.3342	1.936E-02	.3943	4.747E-03
T	9277(500)	16.69	15.47	1.092E-02	.2224	1.584E-02	.3226	1.869E-02	.3806	4.582E-03
T	9278(500)	17.75	16.52	1.057E-02	.2153	1.533E-02	.3123	1.809E-02	.3684	4.436E-03
T	9279(500)	18.80	17.57	1.025E-02	.2088	1.486E-02	.3029	1.754E-02	.3574	4.305E-03
T	9280(500)	19.85	18.63	9.955E-03	.2026	1.444E-02	.2938	1.703E-02	.3466	4.170E-03
T	9281(500)	20.90	19.68	9.686E-03	.1971	1.405E-02	.2859	1.657E-02	.3373	4.058E-03
T	9282(500)	21.95	20.73	9.437E-03	.1922	1.369E-02	.2788	1.615E-02	.3290	3.961E-03
T	9283(500)	23.00	21.78	9.206E-03	.1874	1.335E-02	.2718	1.575E-02	.3207	3.860E-03
T	9284(500)	24.05	22.83	8.992E-03	.1830	1.304E-02	.2654	1.539E-02	.3132	3.769E-03
T	9285(500)	25.10	23.88	8.792E-03	.1791	1.275E-02	.2597	1.504E-02	.3064	3.689E-03

```
                                    ****************
                                    * UNCLASSIFIED *
                                    ****************
                                        8/21/74

NASA-RI STS OH25A                    AEDC(ARO,INC.) ARNOLD AFS, TENNESSEE
                                      VON KARMAN GAS DYNAMICS FACILITY
V41B-83A                                50 INCH HYPERSONIC TUNNEL B

GROUP  CONFIG    MODEL      MACH NO    PO(PSIA)  TO(DEG R)  ALPHA-MODEL  ALPHA-SECTOR  ALPHA-PREBEND  ROLL-MODEL  YAW
  67      4   LEADING EDGE    8.00      857.1      1362        30.01         -.01          30.00        180.00      -.00

 T-INF    P-INF   Q-INF   V-INF     RHO-INF      MU-INF        RE/FT      HREF          STREF
(DEG R)  (PSIA)  (PSIA)  (FT/SEC)  (SLUGS/FT3)  (LB-SEC/FT2)  (FT-1)     (R= .0175FT)  (R= .0175FT)
 98.7     .088   3.933    3894     7.465E-05    7.944E-08   3.659E 06   4.910E-02     2.120E-02

CAMERA        ROLL NO  PAINT TEMP (DEG F)   INITIAL TEMP (DEG F)   SQUARE ROOT (RHOXCXK)    TBAR(TO)   BETA(TO)
TOP(T)          370
                          500                  85                   .0542                   5.084E-01  7.9270E-01

   PIC NO     TIME DELTIME     H(TO)      H(TO)/HREF   H(.9TO)    H(.9TO)/HREF H( .867TO)  H( .867TO)/HREF  ST(TO)
T  9286(500) 26.16  24.93     8.605E-03     .1752     1.248E-02     .2541       1.472E-02     .2998       3.609E-03
             26.21          MODEL HAS LEFT CENTERLINE
T  9287(500) 27.21  25.98     8.429E-03     .1716     1.222E-02     .2489       1.442E-02     .2937       3.536E-03
T  9288(500) 28.26  27.04     8.263E-03     .1683     1.198E-02     .2440       1.414E-02     .2879       3.466E-03
      ERROR IN POWRF  BASE<0      A = 6001000064653215 CALL FROM 72651
```

GROUP 68
0370-9292

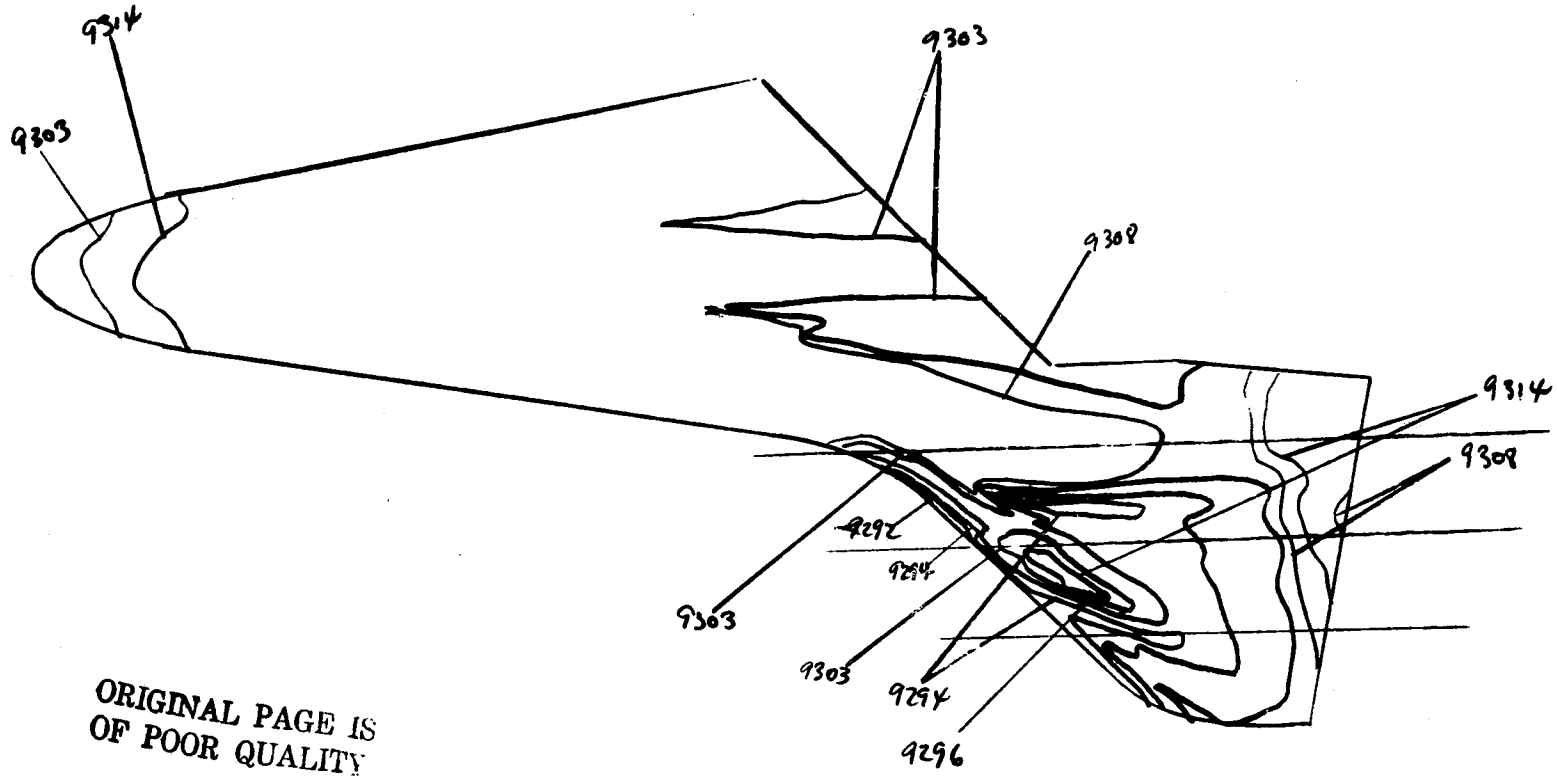

ORIGINAL PAGE IS
OF POOR QUALITY

ORIGINAL PAGE IS
OF POOR QUALITY

****
* UNCLASSIFIED *
****

8/21/74

NASA-RI STS OH25A

AEDC(ARO,INC.) ARNOLD AFS, TENNESSEE
VON KARMAN GAS DYNAMICS FACILITY
50 INCH HYPERSONIC TUNNEL A

V418-83A

GROUP	CONFIG	MODEL	MACH NO	PO(PSIA)	TO(DEG R)	ALPHA-MODEL	ALPHA-SECTOR	ALPHA-PREBEND	ROLL-MODEL	YAW
68	5	TRANSITION	8.00	860.3	1367	30.01	-.01	30.00	180.00	-.00

T-INF (DEG R)	P-INF (PSIA)	Q-INF (PSIA)	V-INF (FT/SEC)	RHO-INF (SLUGS/FT3)	MU-INF (LB-SEC/FT2)	RE/FT (FT-1)	HREF (R= .0175FT)	STREF (R= .0175FT)
99.0	.088	3.948	3901	7.464E-05	7.974E-08	3.652E 06	4.922E-02	2.121E-02

CAMERA TOF(T)	POLL NO	PAINT TEMP (DEG F)	INITIAL TEMP (DEG F)	SQUARE ROOT (RHOXCXK)	TBAR(TO)	BETA(TO)
	370	500	85	.0542	0	0

	PIC NO	TIME	DELTIME	H(TO)	H(TO)/HREF	H(.9TO)	H(.9TO)/HREF	H(.867TO)	H(.867TO)/HREF	ST(TO)
T	9289(500)	.03		MODEL HAS NOT REACHED CENTERLINE						
T	9290(500)	1.00		MODEL HAS NOT REACHED CENTERLINE						
T	9291(500)	2.03		MODEL HAS NOT REACHED CENTERLINE						
INJECT TIME =		2.30								
T	9292(500)	3.08	1.79	3.176E-02	.6447	4.587E-02	.9311	5.398E-02	1.0957	1.328E-02
T	9293(500)	4.13	2.84	2.520E-02	.5118	3.639E-02	.7392	4.282E-02	.8699	1.055E-02
T	9294(500)	5.18	3.89	2.152E-02	.4372	3.108E-02	.6314	3.658E-02	.7431	9.012E-03
T	9295(500)	6.23	4.94	1.910E-02	.3878	2.758E-02	.5601	3.245E-02	.6591	7.992E-03
T	9296(500)	7.28	5.99	1.734E-02	.3522	2.504E-02	.5086	2.947E-02	.5986	7.259E-03
T	9297(500)	8.33	7.04	1.599E-02	.3249	2.310E-02	.4692	2.718E-02	.5521	6.696E-03
T	9298(500)	9.39	8.09	1.492E-02	.3030	2.155E-02	.4375	2.535E-02	.5149	6.243E-03
T	9299(500)	10.44	9.14	1.403E-02	.2851	2.027E-02	.4118	2.385E-02	.4846	5.877E-03
T	9300(500)	11.46	10.17	1.331E-02	.2704	1.922E-02	.3905	2.262E-02	.4595	5.574E-03
T	9301(500)	12.51	11.22	1.267E-02	.2574	1.830E-02	.3717	2.153E-02	.4374	5.306E-03
T	9302(500)	13.57	12.27	1.211E-02	.2461	1.750E-02	.3555	2.059E-02	.4183	5.074E-03
T	9303(500)	14.62	13.32	1.163E-02	.2362	1.679E-02	.3411	1.976E-02	.4014	4.869E-03
T	9304(500)	15.67	14.38	1.119E-02	.2273	1.617E-02	.3283	1.902E-02	.3863	4.684E-03
T	9305(500)	16.72	15.43	1.081E-02	.2196	1.561E-02	.3171	1.836E-02	.3731	4.529E-03
T	9306(500)	17.77	16.48	1.046E-02	.2124	1.510E-02	.3068	1.777E-02	.3610	4.381E-03
T	9307(500)	18.82	17.53	1.014E-02	.2059	1.464E-02	.2974	1.723E-02	.3500	4.246E-03
T	9308(500)	19.87	18.58	9.846E-03	.2000	1.422E-02	.2888	1.673E-02	.3398	4.121E-03
T	9309(500)	20.92	19.63	9.579E-03	.1946	1.383E-02	.2811	1.628E-02	.3307	4.013E-03
T	9310(500)	21.98	20.68	9.332E-03	.1896	1.348E-02	.2738	1.586E-02	.3222	3.910E-03
T	9311(500)	23.03	21.73	9.104E-03	.1850	1.315E-02	.2671	1.547E-02	.3144	3.815E-03
T	9312(500)	24.08	22.78	8.891E-03	.1805	1.284E-02	.2607	1.511E-02	.3068	3.720E-03
T	9313(500)	25.13	23.84	8.693E-03	.1766	1.255E-02	.2551	1.477E-02	.3002	3.641E-03

****
* UNCLASSIFIED *
****

****
* UNCLASSIFIED *
****

8/21/74

NASA-RI STS OH25A

V418-83A

AEDC(ARO,INC.) ARNOLD AFS, TENNESSEE
VON KARMAN GAS DYNAMICS FACILITY
50 INCH HYPERSONIC TUNNEL B

GROUP	CONFIG	MODEL	MACH NO	PO(PSIA)	TO(DEG R)	ALPHA-MODEL	ALPHA-SECTOR	ALPHA-PREBEND	ROLL-MODEL	YAW
68	5	TRANSITION	8.00	860.1	1367	30.01	-.01	30.00	180.00	-.00

T-INF (DEG R)	P-INF (PSIA)	Q-INF (PSIA)	V-INF (FT/SEC)	RHO-INF (SLUGS/FT3)	MU-INF (LB-SEC/FT2)	RE/FT (FT-1)	HREF (R= .0175FT)	STREF (R= .0175FT)
99.1	.088	3.947	3902	7.459E-05	7.978E-06	3.648E 06	4.922E-02	2.121E-02

CAMERA	ROLL NO	PAINT TEMP (DEG F)	INITIAL TEMP (DEG F)	SQUARE ROOT (RHOXCXK)	TBAR(TO)	BETA(TO)
TOP(T)	370	500	85	.0542	5.050E-01	7.8303E-01

	PIC NO	TIME	DELTIME	H(TO)	H(TO)/HREF	H(.9TO)	H(.9TO)/HREF	H(.867TO)	H(.867TO)/HREF	ST(TO)
T	9314(500)	26.18	24.89	8.507E-03	.1728	1.229E-02	.2496	1.446E-02	.2937	3.564E-03
T	9315(500)	27.23	25.94	8.333E-03	.1692	1.203E-02	.2444	1.416E-02	.2876	3.487E-03
		27.33		MODEL HAS LEFT CENTERLINE						
T	9316(500)	28.28	26.99	8.169E-03	.1660	1.180E-02	.2397	1.388E-02	.2821	3.422E-03
T	9317(500)	29.33	28.04	8.015E-03	.1628	1.157E-02	.2352	1.362E-02	.2767	3.358E-03

ERROR IN POWRF BASE<0 A = 5777377762626227 CALL FROM 72651

ORIGINAL PAGE IS
OF POOR QUALITY

GROUP 69
0370-9321

ORIGINAL PAGE IS
OF POOR QUALITY

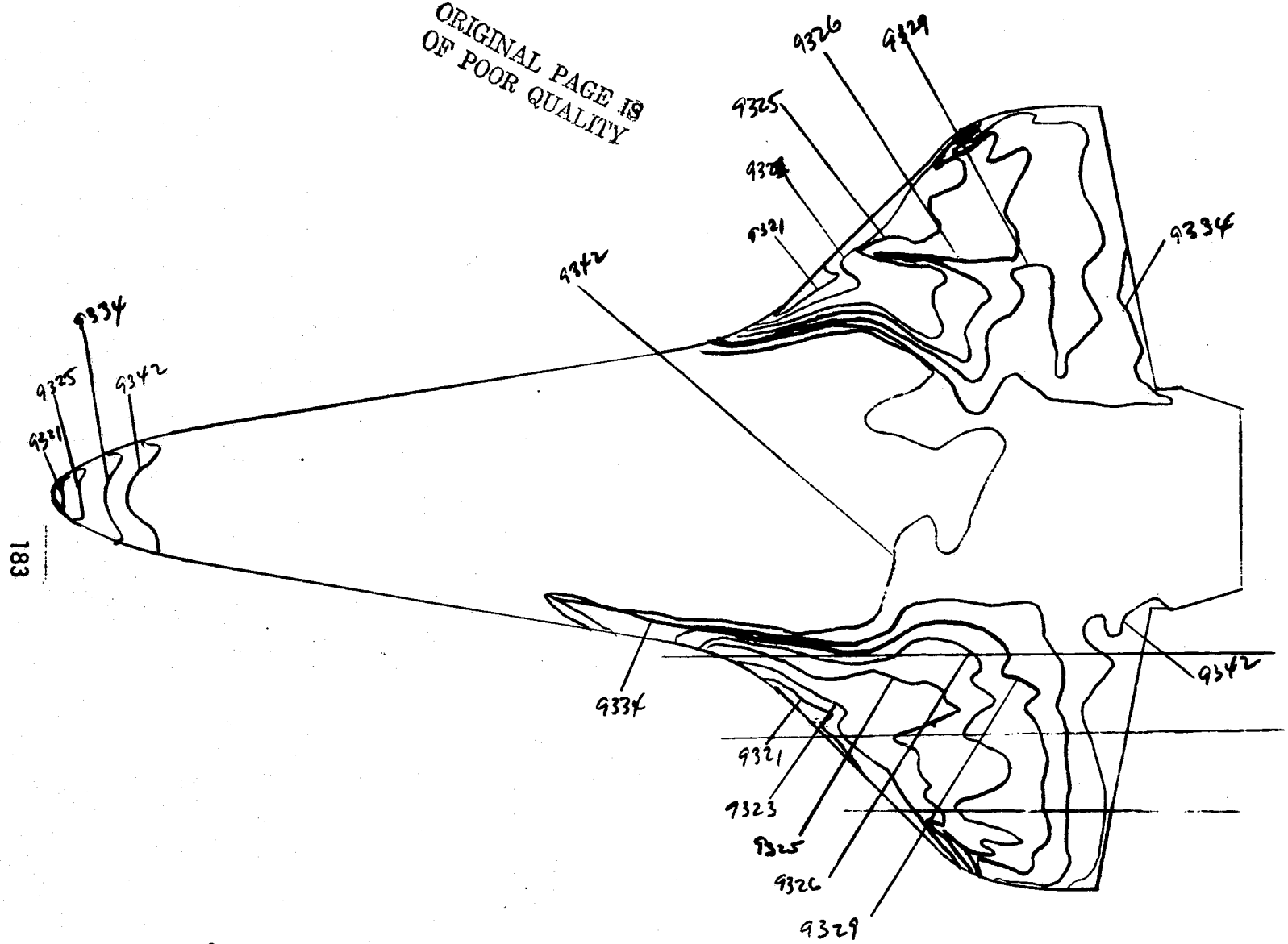

GROUP 69
0370-9321

ORIGINAL PAGE IS
OF POOR QUALITY

****
* UNCLASSIFIED *
****

8/21/74

NASA-RI STS OH25A

V418-83A

AEDC(ARO,INC.) ARNOLD AFS, TENNESSEE
VON KARMAN GAS DYNAMICS FACILITY
50 INCH HYPERSONIC TUNNEL R

GROUP	CONFIG	MODEL	MACH NO	PO(PSIA)	TO(DEG R)	ALPHA-MODEL	ALPHA-SECTOR	ALPHA-PREBEND	ROLL-MODEL	YAW
69	1	OREITER	8.00	863.5	1371	30.00	.00	30.00	180.00	-.00

T-INF (DEG R)	P-INF (PSIA)	Q-INF (PSIA)	V-INF (FT/SEC)	RHO-INF (SLUGS/FT3)	MU-INF (LB-SEC/FT2)	RE/FT (FT-1)	HREF (R= .0175FT)	STREF (R= .0175FT)
99.4	.088	3.962	3907	7.469E-05	7.999E-08	3.648E 06	4.934E-02	2.121E-02

CAMERA TOP(T)	ROLL NO	PAINT TEMP (DEG F)	INITIAL TEMP (DEG F)	SQUARE ROOT (RHOXCXK)	TBAR(TO)	BETA(TO)
	370.	500	90	.0542	0	0

	PIC NO	TIME	DELTIME	H(TO)	H(TO)/HREF	H(.9TO)	H(.9TO)/HREF	H(.867TO)	H(.867TO)/HREF	ST(TO)
T	9318(500)	.03		MODEL HAS NOT REACHED CENTERLINE						
T	9319(500)	1.00		MODEL HAS NOT REACHED CENTERLINE						
T	9320(500)	2.03		MODEL HAS NOT REACHED CENTERLINE						
INJECT TIME =		2.23								
T	9321(500)	3.08	1.93	3.076E-02	.6233	4.429E-02	.8976	5.203E-02	1.0543	1.285E-02
T	9322(500)	4.10	2.85	2.462E-02	.4989	3.545E-02	.7184	4.164E-02	.8438	1.028E-02
T	9323(500)	5.16	3.91	2.104E-02	.4267	3.030E-02	.6145	3.559E-02	.7218	8.799E-03
T	9324(500)	6.21	4.96	1.868E-02	.3787	2.690E-02	.5452	3.159E-02	.6405	7.805E-03
T	9325(500)	7.26	6.01	1.697E-02	.3439	2.443E-02	.4953	2.870E-02	.5817	7.089E-03
T	9326(500)	8.31	7.06	1.565E-02	.3172	2.254E-02	.4567	2.647E-02	.5365	6.535E-03
T	9327(500)	9.36	8.11	1.460E-02	.2960	2.103E-02	.4263	2.470E-02	.5007	6.102E-03
T	9328(500)	10.41	9.16	1.374E-02	.2786	1.978E-02	.4012	2.324E-02	.4712	5.743E-03
T	9329(500)	11.46	10.21	1.301E-02	.2639	1.874E-02	.3800	2.201E-02	.4463	5.439E-03
T	9330(500)	12.51	11.26	1.239E-02	.2512	1.784E-02	.3617	2.096E-02	.4249	5.177E-03
T	9331(500)	13.57	12.32	1.185E-02	.2403	1.706E-02	.3460	2.004E-02	.4064	4.953E-03
T	9332(500)	14.62	13.37	1.138E-02	.2307	1.638E-02	.3322	1.924E-02	.3902	4.757E-03
T	9333(500)	15.67	14.42	1.095E-02	.2221	1.577E-02	.3198	1.853E-02	.3756	4.579E-03
T	9334(500)	16.72	15.47	1.057E-02	.2144	1.523E-02	.3088	1.788E-02	.3627	4.421E-03
T	9335(500)	17.77	16.52	1.023E-02	.2074	1.473E-02	.2987	1.731E-02	.3508	4.275E-03
T	9336(500)	18.80	17.55	9.928E-03	.2014	1.430E-02	.2900	1.679E-02	.3406	4.153E-03
T	9337(500)	19.85	18.60	9.644E-03	.1955	1.389E-02	.2815	1.631E-02	.3307	4.030E-03
T	9338(500)	20.90	19.65	9.362E-03	.1902	1.351E-02	.2739	1.587E-02	.3218	3.922E-03
T	9339(500)	21.95	20.70	9.141E-03	.1854	1.316E-02	.2670	1.546E-02	.3136	3.825E-03
T	9340(500)	23.00	21.75	8.917E-03	.1809	1.284E-02	.2605	1.508E-02	.3060	3.731E-03
T	9341(500)	24.05	22.80	8.709E-03	.1767	1.254E-02	.2544	1.473E-02	.2988	3.644E-03
T	9342(500)	25.10	23.85	8.515E-03	.1727	1.226E-02	.2486	1.440E-02	.2920	3.559E-03

****
* UNCLASSIFIED *
****

ORIGINAL PAGE IS
OF POOR QUALITY

* UNCLASSIFIED *

8/21/74

NASA-RI STS OH25A

V41B-83A

AEDC(ARO,INC.) ARNOLD AFS, TENNESSEE
VON KARMAN GAS DYNAMICS FACILITY
50 INCH HYPERSONIC TUNNEL B

GROUP	CONFIG	MODEL	MACH NO	PO(PSIA)	TO(DEG R)	ALPHA-MODEL	ALPHA-SECTOR	ALPHA-PREBEND	ROLL-MODEL	YAW
69	1	ORBITER	8.00	862.8	1371	30.00	.00	30.00	180.00	-.00

T-INF (DEG R)	P-INF (PSIA)	Q-INF (PSIA)	V-INF (FT/SEC)	RHO-INF (SLUGS/FT3)	MU-INF (LB-SEC/FT2)	RE/FT (FT-1)	HREF (R= .0175FT)	STREF (R= .0175FT)
99.3	.088	3.959	3907	7.465E-05	7.996E-08	3.647E 06	4.932E-02	2.121E-02

CAMERA	ROLL NO	PAINT TEMP (DEG F)	INITIAL TEMP (DEG F)	SQUARE ROOT (RHOXCAK)	TBAR(TO)	BETA(TO)
TOP(T)	370	500	90	.0542	4.994E-01	7.6730E-01

	PIC NO	TIME	DELTIME	H(TO)	H(TO)/HREF	H(.9TO)	H(.9TO)/HREF	H(.867TO)	H(.867TO)/HREF	ST(TO)
T	9343(500)	26.18	24.93	8.329E-03	.1689	1.199E-02	.2432	1.409E-02	.2657	3.483E-03
T	9344(500)	27.21	25.96	8.163E-03	.1656	1.175E-02	.2384	1.381E-02	.2800	3.414E-03
T	9345(500)	28.26	27.01	8.002E-03	.1623	1.152E-02	.2337	1.354E-02	.2745	3.345E-03
		28.73		MODEL HAS LEFT CENTERLINE						
T	9346(500)	29.31	28.06	7.851E-03	.1594	1.130E-02	.2295	1.328E-02	.2696	3.290E-03
T	9347(500)	30.36	29.11	7.708E-03	.1565	1.110E-02	.2253	1.304E-02	.2647	3.229E-03

ERROR IN POWRF BASE<0 A = 6001000000001017 CALL FROM 72651

GROUP 70
0370-9351

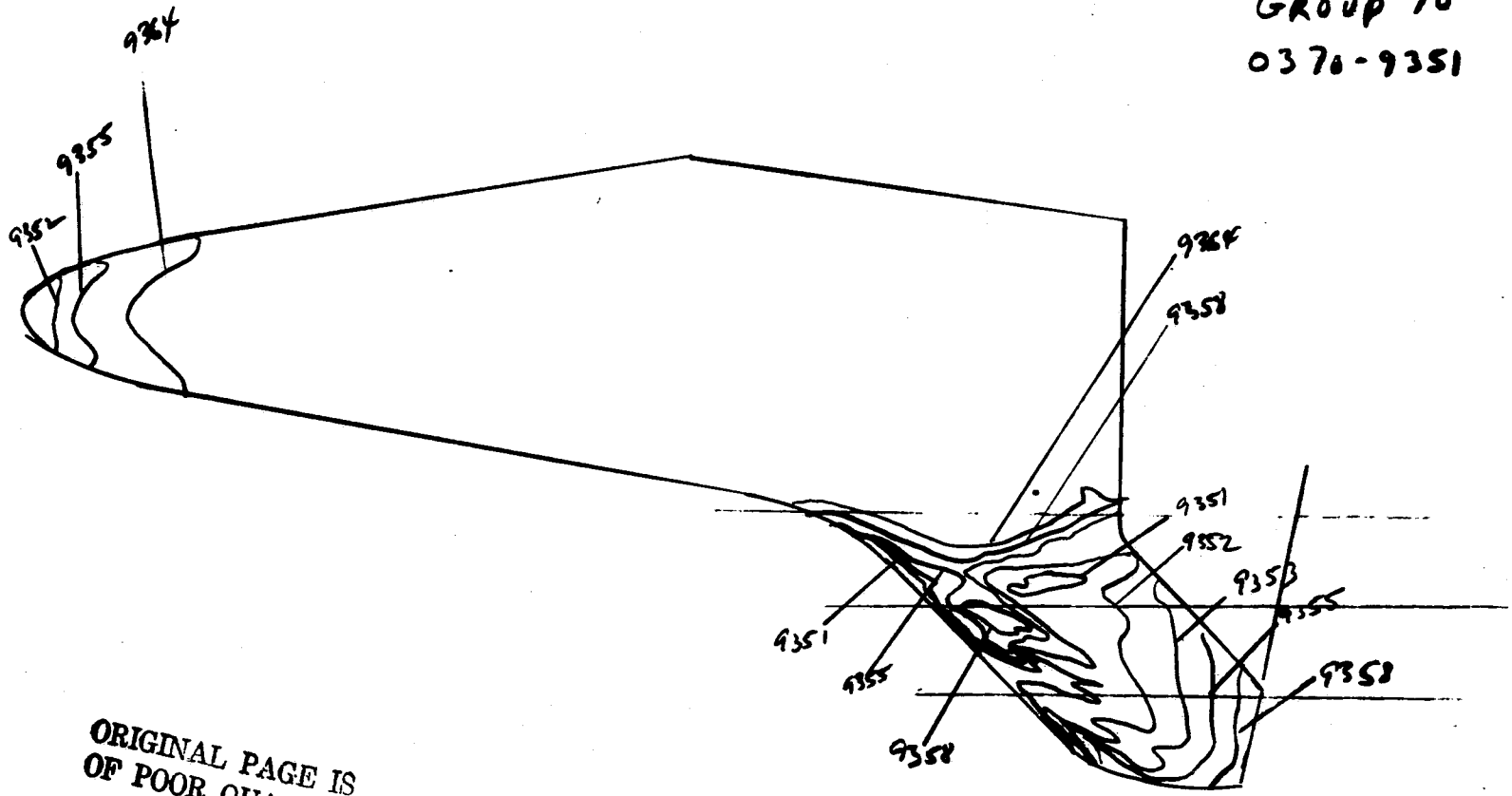

ORIGINAL PAGE IS
OF POOR QUALITY

ORIGINAL PAGE IS OF POOR QUALITY

****
* UNCLASSIFIED *
****
8/21/74

NASA-RI STS OH25A

V418-83A

AEDC(ARO,INC.) ARNOLD AFS, TENNESSEE
VON KARMAN GAS DYNAMICS FACILITY
50 INCH HYPERSONIC TUNNEL B

GROUP	CONFIG	MODEL	MACH NO	PO(PSIA)	TO(DEG R)	ALPHA-MODEL	ALPHA-SECTON	ALPHA-PREBEND	ROLL-MODEL	YAW
70	4	LEADING EDGE	8.00	861.8	1368	30.00	0	30.00	180.00	-.00

T-INF (DEG R)	P-INF (PSIA)	Q-INF (PSIA)	V-INF (FT/SEC)	RHO-INF (SLUGS/FT3)	MU-INF (LB-SEC/FT2)	RE/FT (FT-1)	HREF (R= .0175FT)	STREF (R= .0175FT)
99.2	.088	3.954	3904	7.468E-05	7.984E-08	3.652E 06	4.928E-02	2.120E-02

CAMERA TOP(T)	ROLL NO	PAINT TEMP (DEG F)	INITIAL TEMP (DEG F)	SQUARE ROOT (RHOXCXK)	TRAR(TO)	BETA(TO)
	370	400	90	.0555	0	0

	PIC NO	TIME	DELTIME	H(TO)	H(TO)/HREF	H(.9TO)	H(.9TO)/HREF	H(.867TO)	H(.867TO)/HREF	ST(TO)
T	9348(400)	.03		MODEL HAS NOT REACHED CENTERLINE						
T	9349(400)	1.00		MODEL HAS NOT REACHED CENTERLINE						
T	9350(400)	2.03		MODEL HAS NOT REACHED CENTERLINE						
INJECT TIME =		2.28								
T	9351(400)	3.05	1.77	2.038E-02	.4135	2.718E-02	.5514	3.058E-02	.6203	8.564E-03
T	9352(400)	4.10	2.83	1.615E-02	.3276	2.154E-02	.4368	2.423E-02	.4914	6.782E-03
T	9353(400)	5.16	3.88	1.379E-02	.2797	1.839E-02	.3730	2.069E-02	.4196	5.791E-03
T	9354(400)	6.21	4.93	1.223E-02	.2481	1.631E-02	.3308	1.835E-02	.3721	5.135E-03
T	9355(400)	7.26	5.98	1.110E-02	.2253	1.481E-02	.3004	1.666E-02	.3380	4.665E-03
T	9356(400)	8.28	7.01	1.026E-02	.2080	1.368E-02	.2774	1.539E-02	.3121	4.306E-03
T	9357(400)	9.34	8.06	9.566E-03	.1940	1.276E-02	.2587	1.435E-02	.2911	4.017E-03
T	9358(400)	10.39	9.11	8.997E-03	.1823	1.200E-02	.2431	1.350E-02	.2735	3.772E-03
T	9359(400)	11.44	10.16	8.519E-03	.1728	1.136E-02	.2305	1.278E-02	.2593	3.579E-03
T	9360(400)	12.49	11.21	8.110E-03	.1645	1.081E-02	.2193	1.217E-02	.2467	3.404E-03
T	9361(400)	13.54	12.26	7.755E-03	.1572	1.034E-02	.2097	1.163E-02	.2359	3.254E-03
T	9362(400)	14.59	13.31	7.442E-03	.1509	9.924E-03	.2012	1.116E-02	.2264	3.123E-03
T	9363(400)	15.64	14.36	7.165E-03	.1453	9.554E-03	.1938	1.075E-02	.2180	3.008E-03
T	9364(400)	16.69	15.42	6.916E-03	.1402	9.222E-03	.1869	1.037E-02	.2103	2.900E-03
		17.72		MODEL HAS LEFT CENTERLINE						
T	9365(400)	17.75	16.47	6.692E-03	.1356	8.923E-03	.1809	1.004E-02	.2035	2.806E-03
T	9366(400)	18.80	17.52	6.488E-03	.1316	8.651E-03	.1754	9.732E-03	.1974	2.723E-03
T	9367(400)	19.85	18.57	6.301E-03	.1278	8.403E-03	.1704	9.453E-03	.1917	2.646E-03
T	9368(400)	20.90	19.62	6.130E-03	.1243	8.174E-03	.1657	9.196E-03	.1864	2.571E-03

ERROR IN POWRF BASE<0 A = 6001000032325733 CALL FROM 72651

GROUP 71
0370-9372

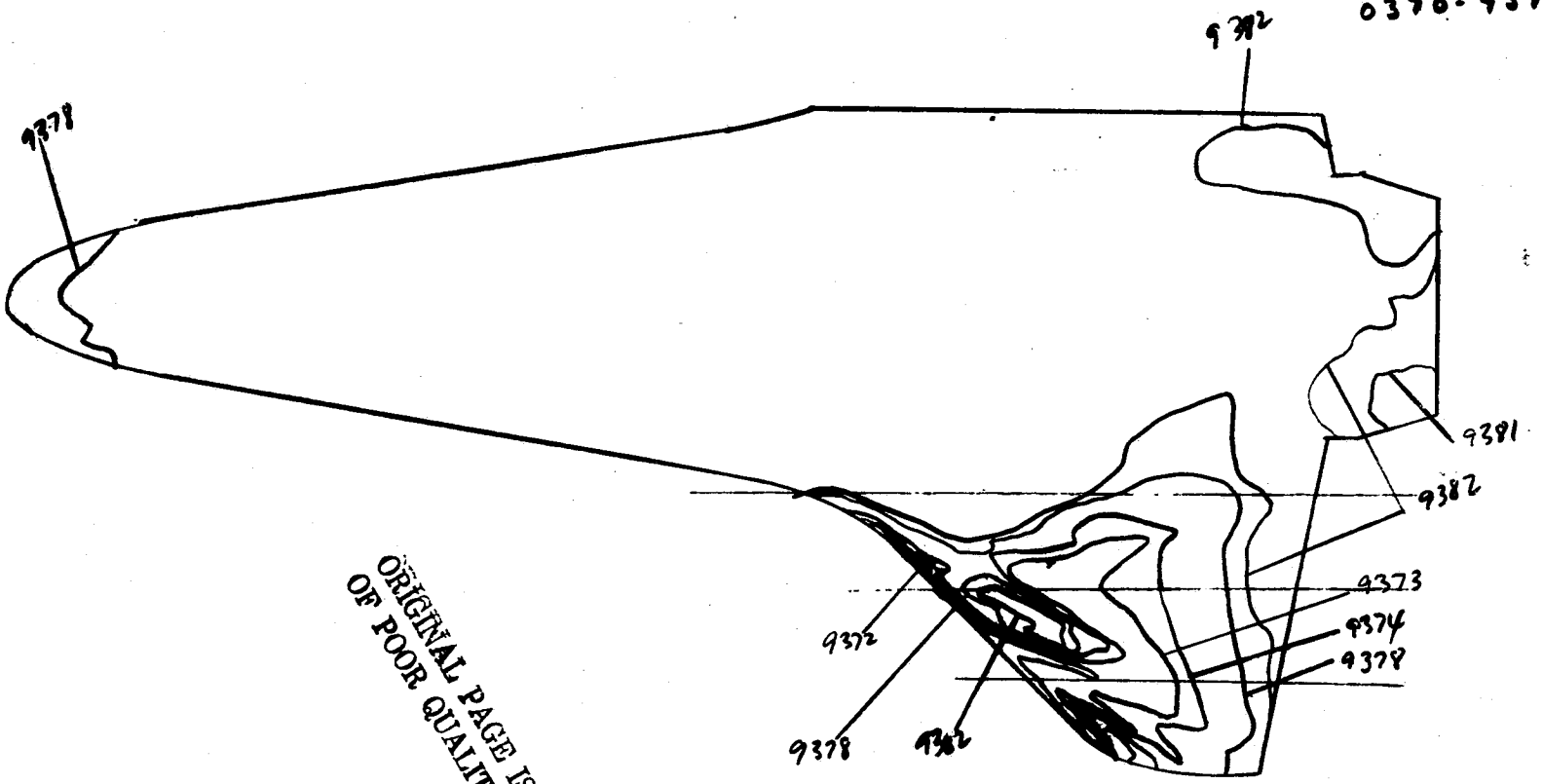

ORIGINAL PAGE IS
OF POOR QUALITY

****
* UNCLASSIFIED *
****

8/21/74

NASA-RI STS OH25A

V41R-83A

AEDC(ARO,INC.) ARNOLD AFS, TENNESSEE
VON KARMAN GAS DYNAMICS FACILITY
50 INCH HYPERSONIC TUNNEL R

GROUP	CONFIG	MODEL	MACH.NO	PO(PSIA)	TO(DEG R)	ALPHA-MODEL	ALPHA-SECTOR	ALPHA-PREBEND	ROLL-MODEL	YAW
71	2	40 PERCENT	8.00	862.3	1364	30.00	-.00	30.00	180.00	-.00

T-INF (DEG R)	P-INF (PSIA)	Q-INF (PSIA)	V-INF (FT/SEC)	RHO-INF (SLUGS/FT3)	MU-INF (LB-SEC/FT2)	RE/FT (FT-1)	HREF (R= .0175FT)	STREF (R= .0175FT)
96.8	.088	3.957	3897	7.497E-05	7.957E-08	3.672E 06	4.926E-02	2.116E-02

CAMERA TOP(T)	ROLL NO	PAINT TEMP (DEG F)	INITIAL TEMP (DEG F)	SQUARE ROOT (RHOXCXK)	TBAR(TO)	BETA(TO)
	370	400	86	.0555	0	0

	PIC NO	TIME	DELTIME	H(TO)	H(TO)/HREF	H(.9TO)	H(.9TO)/HREF	H(.867TO)	H(.867TO)/HREF	ST(TO)
T	9369(400)	.63		MODEL HAS NOT REACHED CENTERLINE						
T	9370(400)	1.00		MODEL HAS NOT REACHED CENTERLINE						
T	9371(400)	2.03		MODEL HAS NOT REACHED CENTERLINE						
INJECT TIME =		2.25								
T	9372(400)	3.08	1.81	2.058E-02	.4177	2.749E-02	.5579	3.095E-02	.6282	8.631E-03
T	9373(400)	4.10	2.84	1.645E-02	.3338	2.197E-02	.4458	2.473E-02	.5020	6.899E-03
T	9374(400)	5.16	3.89	1.405E-02	.2852	1.877E-02	.3809	2.113E-02	.4289	5.893E-03
T	9375(400)	6.21	4.94	1.247E-02	.2531	1.665E-02	.3380	1.875E-02	.3806	5.231E-03
T	9376(400)	7.26	5.99	1.132E-02	.2297	1.512E-02	.3068	1.703E-02	.3455	4.746E-03
T	9377(400)	8.31	7.04	1.044E-02	.2120	1.395E-02	.2831	1.570E-02	.3188	4.382E-03
T	9378(400)	9.36	8.10	9.741E-03	.1976	1.301E-02	.2640	1.465E-02	.2972	4.083E-03
T	9379(400)	10.39	9.12	9.177E-03	.1862	1.226E-02	.2487	1.380E-02	.2801	3.848E-03
T	9380(400)	11.44	10.17	8.690E-03	.1764	1.161E-02	.2356	1.307E-02	.2652	3.645E-03
T	9381(400)	12.49	11.22	8.273E-03	.1678	1.105E-02	.2242	1.244E-02	.2524	3.467E-03
T	9382(400)	13.54	12.29	7.911E-03	.1605	1.057E-02	.2144	1.190E-02	.2414	3.316E-03
T	9383(400)	14.59	13.33	7.592E-03	.1540	1.014E-02	.2057	1.142E-02	.2317	3.182E-03
T	9384(400)	15.64	14.38	7.309E-03	.1482	9.762E-03	.1979	1.099E-02	.2228	3.058E-03
T	9385(400)	16.69	15.43	7.056E-03	.1431	9.424E-03	.1911	1.061E-02	.2152	2.955E-03
		17.45		MODEL HAS LEFT CENTERLINE						
T	9386(400)	17.75	16.48	6.827E-03	.1385	9.119E-03	.1850	1.027E-02	.2083	2.860E-03
T	9387(400)	18.80	17.53	6.619E-03	.1343	8.841E-03	.1794	9.955E-03	.2020	2.774E-03

ERROR IN FOWAF BASE<0 A = 6001000032325733 CALL FROM 7265)

GROUP 72

0370 - 9391

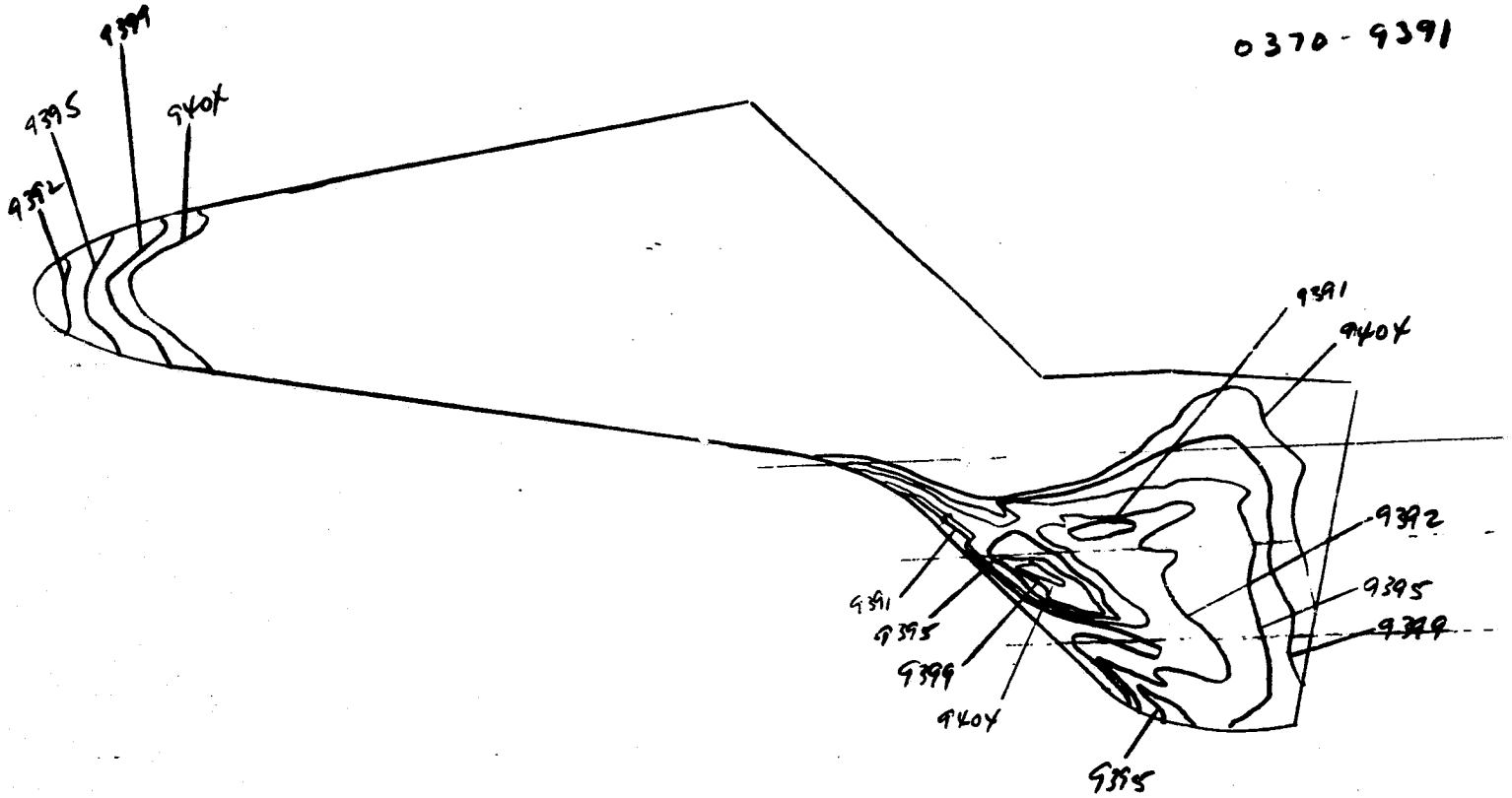

****
* UNCLASSIFIED *
****

8/21/74

NASA-RI STS OH25A

V418-83A

AEDC(ARO,INC.) ARNOLD AFS, TENNESSEE
VON KARMAN GAS DYNAMICS FACILITY
50 INCH HYPERSONIC TUNNEL B

GROUP	CONFIG	MODEL	MACH NO	PO(PSIA)	TO(DEG R)	ALPHA-MODEL	ALPHA-SECTOR	ALPHA-PREBEND	ROLL-MODEL	YAW
72	5	TRANSITION	8.00	862.8	1361	30.00	-.00	30.00	180.00	-.00

T-INF (DEG R)	P-INF (PSIA)	Q-INF (PSIA)	V-INF (FT/SEC)	RHO-INF (SLUGS/FT3)	MU-INF (LB-SEC/FT2)	RE/FT (FT-1)	HREF (R= .0175FT)	STREF (R= .0175FT)
98.6	.088	3.959	3893	7.519E-05	7.939E-08	3.687E 06	4.926E-02	2.112E-02

CAMERA	ROLL NO	PAINT TEMP (DEG F)	INITIAL TEMP (DEG F)	SQUARE ROOT (RHOXCXK)	TBAR(TO)	BETA(TO)
TOP(T)	370	400	87	.0555	0	0

	PIC NO	TIME	DELTIME	H(TO)	H(TO)/HREF	H(.9TO)	H(.9TO)/HREF	H(.867TO)	H(.867TO)/HREF	ST(TO)
T	9388(400)	.03		MODEL HAS NOT REACHED CENTERLINE						
T	9389(400)	1.00		MODEL HAS NOT REACHED CENTERLINE						
T	9390(400)	2.03		MODEL HAS NOT REACHED CENTERLINE						
INJECT TIME =		2.18								
T	9391(400)	3.05	1.83	2.053E-02	.4171	2.746E-02	.5578	3.094E-02	.6285	8.614E-03
T	9392(400)	4.10	2.88	1.637E-02	.3323	2.189E-02	.4444	2.466E-02	.5007	6.858E-03
T	9393(400)	5.16	3.93	1.401E-02	.2845	1.874E-02	.3805	2.111E-02	.4287	5.873E-03
T	9394(400)	6.21	4.98	1.245E-02	.2528	1.664E-02	.3381	1.875E-02	.3809	5.219E-03
T	9395(400)	7.23	6.01	1.133E-02	.2302	1.516E-02	.3078	1.708E-02	.3468	4.751E-03
T	9396(400)	8.28	7.06	1.046E-02	.2124	1.398E-02	.2840	1.575E-02	.3200	4.385E-03
T	9397(400)	9.34	8.11	9.755E-03	.1981	1.305E-02	.2650	1.470E-02	.2985	4.090E-03
T	9398(400)	10.39	9.16	9.179E-03	.1864	1.227E-02	.2492	1.383E-02	.2808	3.847E-03
T	9399(400)	11.41	10.19	8.704E-03	.1768	1.164E-02	.2364	1.311E-02	.2664	3.650E-03
T	9400(400)	12.46	11.24	8.287E-03	.1683	1.108E-02	.2251	1.249E-02	.2536	3.475E-03
T	9401(400)	13.52	12.29	7.925E-03	.1610	1.060E-02	.2153	1.194E-02	.2426	3.324E-03
T	9402(400)	14.57	13.34	7.606E-03	.1545	1.017E-02	.2066	1.146E-02	.2328	3.189E-03
T	9403(400)	15.62	14.40	7.323E-03	.1488	9.793E-03	.1990	1.103E-02	.2242	3.073E-03
T	9404(400)	16.67	15.45	7.070E-03	.1436	9.454E-03	.1920	1.065E-02	.2163	2.963E-03
T	9405(400)	17.70	16.47	6.846E-03	.1390	9.155E-03	.1859	1.031E-02	.2095	2.869E-03
		17.95		MODEL HAS LEFT CENTERLINE						
T	9406(400)	18.75	17.52	6.638E-03	.1348	8.876E-03	.1803	1.000E-02	.2031	2.783E-03
T	9407(400)	19.80	18.58	6.447E-03	.1309	8.621E-03	.1751	9.713E-03	.1972	2.702E-03
T	9408(400)	20.85	19.63	6.272E-03	.1273	8.387E-03	.1703	9.450E-03	.1918	2.627E-03

ERROR IN POWRF BASE<0 A = 6001242066733751 CALL FROM 72651

****
* UNCLASSIFIED *
****
8/21/74

NASA-RI STS OH25A

V416-83A

AEDC(ARO,INC.) ARNOLD AFS, TENNESSEE
VON KARMAN GAS DYNAMICS FACILITY
50 INCH HYPERSONIC TUNNEL B

GROUP	CONFIG	MODEL	MACH NO	PO(PSIA)	TO(DEG R)	ALPHA-MODEL	ALPHA-SECTOR	ALPHA-PREBEND	ROLL-MODEL	YAW
73	1	ORBITER	8.00	861.5	1360	40.02	-10.02	30.00	180.00	-.00

T-INF (DEG R)	P-INF (PSIA)	Q-INF (PSIA)	V-INF (FT/SEC)	RHO-INF (SLUGS/FT3)	MU-INF (LB-SEC/FT2)	RE/FT (FT-1)	HREF (R= .0175FT)	STREF (R= .0175FT)
98.6	.088	3.953	3891	7.512E-05	7.934E-08	3.684E 06	4.921E-02	2.113E-02

CAMERA	ROLL NO	PAINT TEMP (DEG F)	INITIAL TEMP (DEG F)	SQUARE ROOT (RHOXCXK)	TBAR(TO)	BETA(TO)
TOP(T)	370	600	86	.0542	0	0

	PIC NO	TIME	DELTIME	H(TO)	H(TO)/HREF	H(.9TO)	H(.9TO)/HREF	H(.867TO)	H(.867TO)/HREF	ST(TO)
T	9409(600)	.03		MODEL HAS NOT REACHED CENTERLINE						
T	9410(600)	1.00		MODEL HAS NOT REACHED CENTERLINE						
T	9411(600)	2.03		MODEL HAS NOT REACHED CENTERLINE						
INJECT TIME =		2.28								
T	9412(600)	3.05	1.77	5.072E-02	1.0310	8.682E-02	1.7646	1.157E-01	2.3506	2.107E-02
T	9413(600)	4.10	2.83	4.020E-02	.8165	6.880E-02	1.3976	9.165E-02	1.8616	1.667E-02
T	9414(600)	5.16	3.88	3.432E-02	.6972	5.874E-02	1.1934	7.825E-02	1.5896	1.424E-02
T	9415(600)	6.21	4.93	3.044E-02	.6185	5.210E-02	1.0586	6.940E-02	1.4101	1.263E-02
T	9416(600)	7.23	5.95	2.769E-02	.5625	4.740E-02	.9627	6.314E-02	1.2824	1.148E-02
T	9417(600)	8.28	7.01	2.553E-02	.5188	4.370E-02	.8879	5.821E-02	1.1828	1.060E-02
T	9418(600)	9.34	8.06	2.381E-02	.4838	4.075E-02	.8281	5.428E-02	1.1031	9.885E-03
T	9419(600)	10.39	9.11	2.239E-02	.4551	3.833E-02	.7790	5.105E-02	1.0376	9.299E-03
T	9420(600)	11.44	10.16	2.120E-02	.4307	3.629E-02	.7372	4.834E-02	.9820	8.797E-03
T	9421(600)	12.49	11.21	2.018E-02	.4100	3.455E-02	.7019	4.602E-02	.9349	8.375E-03
T	9422(600)	13.54	12.26	1.930E-02	.3921	3.303E-02	.6712	4.400E-02	.8940	8.010E-03
T	9423(600)	14.59	13.31	1.852E-02	.3764	3.170E-02	.6443	4.223E-02	.8583	7.691E-03
T	9424(600)	15.64	14.36	1.783E-02	.3624	3.052E-02	.6203	4.065E-02	.8262	7.403E-03
T	9425(600)	16.69	15.42	1.721E-02	.3497	2.946E-02	.5985	3.924E-02	.7972	7.141E-03
T	9426(600)	17.72	16.44	1.667E-02	.3385	2.853E-02	.5794	3.800E-02	.7719	6.913E-03
T	9427(600)	18.77	17.49	1.616E-02	.3282	2.766E-02	.5617	3.684E-02	.7483	6.701E-03
		19.57		MODEL HAS LEFT CENTERLINE						
T	9428(600)	19.82	18.54	1.569E-02	.3189	2.686E-02	.5459	3.576E-02	.7271	6.515E-03
T	9429(600)	20.87	19.60	1.527E-02	.3102	2.613E-02	.5309	3.481E-02	.7071	6.334E-03

ERROR IN POWRF BASE<0 A = 6001241647466712 CALL FROM 72651

GROUP 74
0370-9433

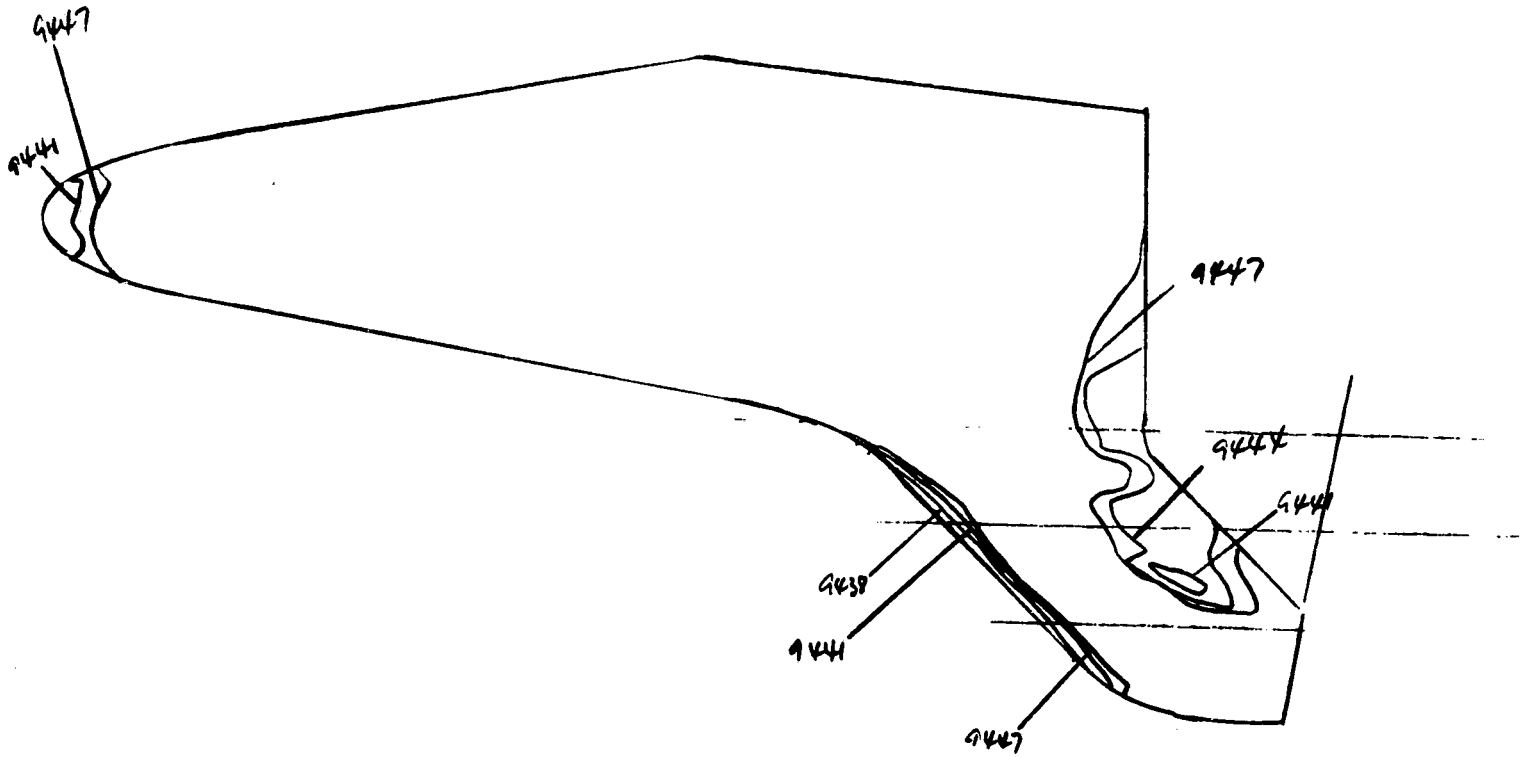

GROUP 74
0370-9433

****
* UNCLASSIFIED *
****

8/21/74

NASA-RI STS OH25A

AEDC(ARO,INC.) ARNOLD AFS, TENNESSEE
VON KARMAN GAS DYNAMICS FACILITY
50 INCH HYPERSONIC TUNNEL B

V418-83A

GROUP	CONFIG	MODEL	MACH NO	PO(PSIA)	TO(DEG R)	ALPHA-MODEL	ALPHA-SECTOR	ALPHA-PREHEND	ROLL-MODEL	YAW
74	4	LEADING EDGE	8.00	861.0	1358	40.00	-10.00	30.00	180.00	-.00

T-INF (DEG R)	P-INF (PSIA)	Q-INF (PSIA)	V-INF (FT/SEC)	RHO-INF (SLUGS/FT3)	MU-INF (LB-SEC/FT2)	RE/FT (FT-1)	HREF (R= .0175FT)	STREF (R= .0175FT)
98.4	.088	3.951	3888	7.520E-05	7.922E-08	3.691E 06	4.919E-02	2.111E-02

CAMERA TOP(T)	ROLL NO	PAINT TEMP (DEG F)	INITIAL TEMP (DEG F)	SQUARE ROOT (RHOXCAK)	TBAR(TO)	BETA(TO)
	370	550	85	.0542	0	0

9430

	PIC NO	TIME	DELTIME	H(TO)	H(TO)/HREF	H(.9TO)	H(.9TO)/HREF	H(.867TO)	H(.867TO)/HREF	ST(TO)
T	9409(550)	.03		MODEL HAS NOT REACHED CENTERLINE						
T	9410(550)	.95		MODEL HAS NOT REACHED CENTERLINE						
T	9411(550)	1.98		MODEL HAS NOT REACHED CENTERLINE						
INJECT TIME =		2.23								
T	9412(550)	3.00	1.75	4.090E-02	.8317	6.358E-02	1.2931	7.853E-02	1.5971	1.703E-02
T	9413(550)	4.05	2.80	3.234E-02	.6573	5.027E-02	1.0218	6.209E-02	1.2621	1.345E-02
T	9414(550)	5.11	3.86	2.758E-02	.5606	4.287E-02	.8715	5.295E-02	1.0764	1.147E-02
T	9415(550)	6.16	4.91	2.445E-02	.4968	3.800E-02	.7724	4.694E-02	.9539	1.016E-02
T	9416(550)	7.21	5.96	2.218E-02	.4510	3.449E-02	.7011	4.260E-02	.8660	9.228E-03
T	9417(550)	8.23	6.98	2.049E-02	.4167	3.185E-02	.6478	3.934E-02	.8001	8.529E-03
T	9418(550)	9.29	8.04	1.910E-02	.3881	2.970E-02	.6034	3.668E-02	.7453	7.939E-03
T	9419(550)	10.34	9.09	1.796E-02	.3651	2.793E-02	.5676	3.449E-02	.7010	7.469E-03
T	9420(550)	11.39	10.14	1.701E-02	.3455	2.644E-02	.5372	3.266E-02	.6635	7.067E-03
T	9421(550)	12.44	11.19	1.619E-02	.3292	2.517E-02	.5118	3.108E-02	.6322	6.740E-03
T	9422(550)	13.49	12.24	1.548E-02	.3147	2.406E-02	.4892	2.972E-02	.6042	6.439E-03
T	9423(550)	14.54	13.29	1.485E-02	.3019	2.309E-02	.4693	2.852E-02	.5796	6.175E-03
T	9424(550)	15.59	14.34	1.430E-02	.2905	2.223E-02	.4517	2.745E-02	.5579	5.943E-03
T	9425(550)	16.64	15.39	1.380E-02	.2805	2.146E-02	.4361	2.650E-02	.5387	5.739E-03
		17.07		MODEL HAS LEFT CENTERLINE						
T	9426(550)	17.70	16.44	1.335E-02	.2713	2.076E-02	.4217	2.564E-02	.5209	5.547E-03
T	9427(550)	18.75	17.50	1.295E-02	.2629	2.013E-02	.4088	2.486E-02	.5049	5.375E-03

ERROR IN FOWRF BASE<0 A = 6001242066733751 CALL FROM 72651

GROUP 75
0370 - 9457

ORIGINAL PAGE IS
OF POOR QUALITY

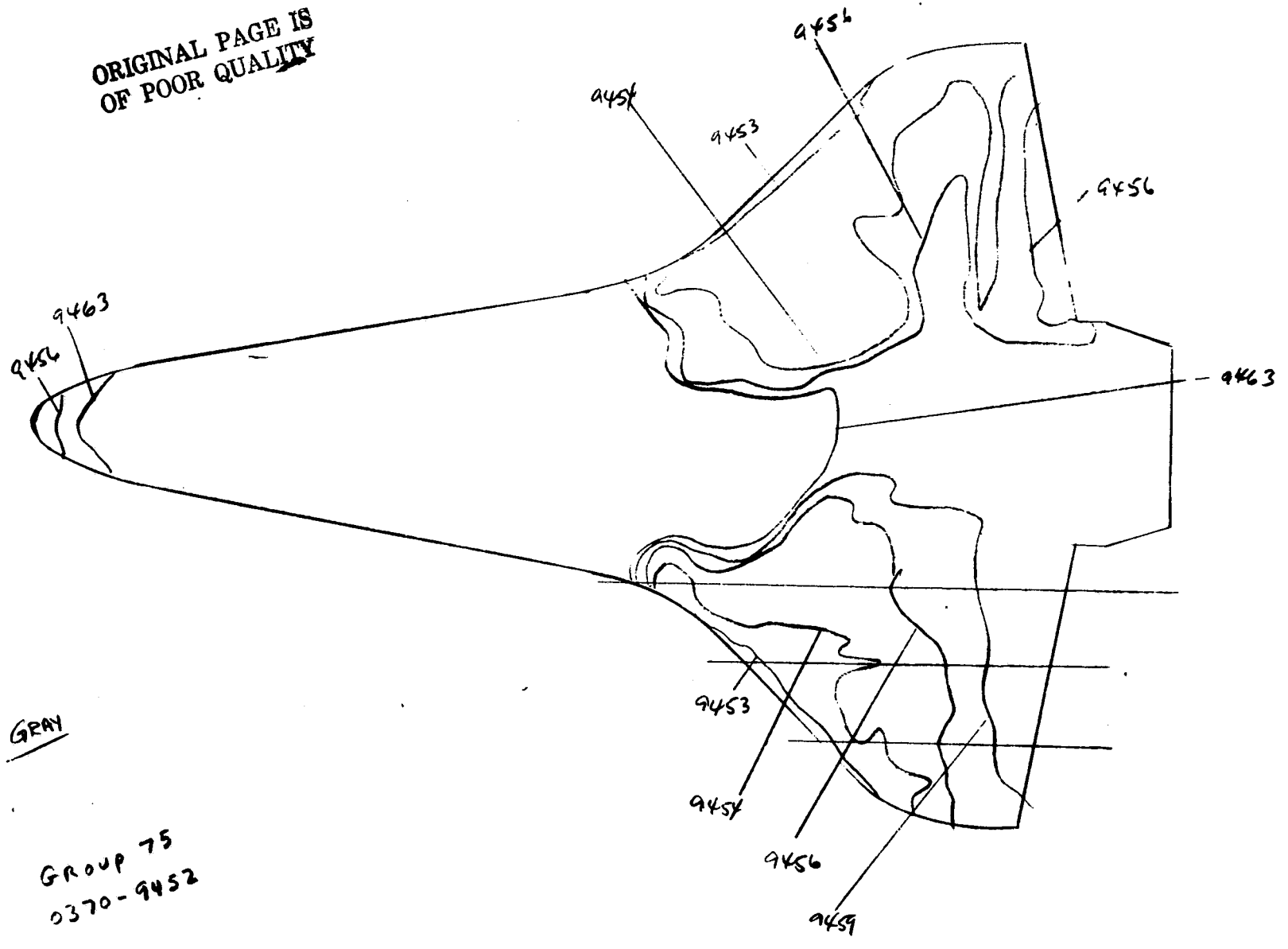

GRAY

GROUP 75
0370-9452

****
* UNCLASSIFIED *
****

8/21/74

NASA-RI STS OH25A

AEDC(ARO,INC.) ARNOLD AFS, TENNESSEE
VON KARMAN GAS DYNAMICS FACILITY
50 INCH HYPERSONIC TUNNEL B

V418-83A

GROUP	CONFIG	MODEL	MACH NO	PO(PSIA)	TO(DEG R)	ALPHA-MODEL	ALPHA-SECTOR	ALPHA-PREBEND	ROLL-MODEL	YAW
75	1	ORBITER	8.00	859.4	1356	40.02	-10.02	30.00	180.00	-.00

T-INF (DEG R)	P-INF (PSIA)	Q-INF (PSIA)	V-INF (FT/SEC)	RHO-INF (SLUGS/FT3)	MU-INF (LB-SEC/FT2)	RE/FT (FT-1)	HREF (R= .0175FT)	STREF (R= .0175FT)
98.3	.088	3.944	3886	7.516E-05	7.911E-08	3.692E 06	4.913E-02	2.112E-02

CAMERA IOP(I)	ROLL NO	PAINT TEMP (DEG F)	INITIAL TEMP (DEG F)	SQUARE ROOT (RHOXCXK)	TBAR(TO)	BETA(TO)
	370	500	86	.0542	0	0

	PIC NO	TIME	DELTIME	H(TO)	H(TO)/HREF	H(.9TO)	H(.9TO)/HREF	H(.867TO)	H(.867TO)/HREF	ST(TO)
T	9449(500)	0		MODEL HAS NOT REACHED CENTERLINE						
T	9450(500)	.58		MODEL HAS NOT REACHED CENTERLINE						
T	9451(500)	2.03		MODEL HAS NOT REACHED CENTERLINE						
INJECT TIME =		2.28								
T	9452(500)	3.05	1.77	3.256E-02	.6624	4.743E-02	.9647	5.609E-02	1.1410	1.359E-02
T	9453(500)	4.10	2.83	2.581E-02	.5251	3.758E-02	.7647	4.445E-02	.9045	1.077E-02
T	9454(500)	5.16	3.88	2.203E-02	.4484	3.209E-02	.6530	3.795E-02	.7724	9.200E-03
T	9455(500)	6.21	4.93	1.954E-02	.3977	2.846E-02	.5792	3.366E-02	.6851	8.160E-03
T	9456(500)	7.26	5.98	1.774E-02	.3610	2.584E-02	.5257	3.056E-02	.6218	7.403E-03
T	9457(500)	8.31	7.03	1.636E-02	.3329	2.383E-02	.4848	2.818E-02	.5734	6.827E-03
T	9458(500)	9.36	8.08	1.526E-02	.3105	2.222E-02	.4523	2.629E-02	.5349	6.370E-03
T	9459(500)	10.39	9.11	1.437E-02	.2925	2.094E-02	.4260	2.476E-02	.5039	6.001E-03
T	9460(500)	11.44	10.16	1.361E-02	.2771	1.982E-02	.4035	2.345E-02	.4773	5.687E-03
T	9461(500)	12.49	11.21	1.296E-02	.2636	1.887E-02	.3840	2.232E-02	.4541	5.408E-03
T	9462(500)	13.54	12.26	1.239E-02	.2520	1.804E-02	.3671	2.134E-02	.4341	5.169E-03
T	9463(500)	14.59	13.31	1.189E-02	.2420	1.732E-02	.3525	2.048E-02	.4169	4.966E-03
T	9464(500)	15.67	14.39	1.144E-02	.2328	1.666E-02	.3390	1.970E-02	.4010	4.777E-03
T	9465(500)	16.69	15.42	1.105E-02	.2248	1.609E-02	.3274	1.903E-02	.3873	4.611E-03
		17.02		MODEL HAS LEFT CENTERLINE						
T	9466(500)	17.75	16.47	1.069E-02	.2175	1.557E-02	.3167	1.842E-02	.3746	4.460E-03
T	9467(500)	18.80	17.52	1.037E-02	.2109	1.510E-02	.3072	1.785E-02	.3633	4.326E-03

ERROR IN POWRF BASE<0 A = 6001241704212372 CALL FROM 72651

GROUP 76
0304 - 9555

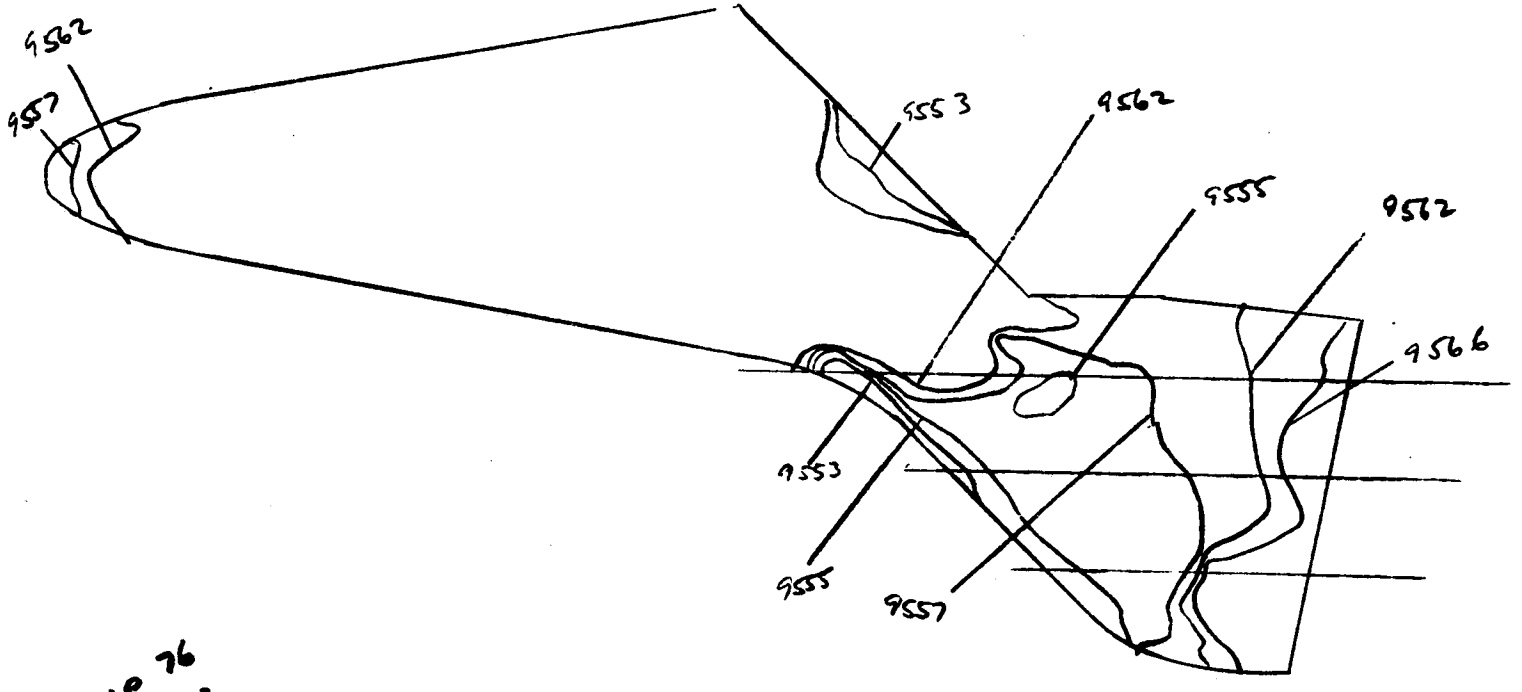

GROUP 76
0304- 9553

```
                                   ****************
                                   * UNCLASSIFIED *
                                   ****************
                                        8/21/74

NASA-RI STS OH25A                 AEDC(ARO,INC.) ARNOLD AFS, TENNESSEE
                                  VON KARMAN GAS DYNAMICS FACILITY
V418-83A                             50 INCH HYPERSONIC TUNNEL B

 GROUP  CONFIG    MODEL      MACH NO    PO(PSIA)  TO(DEG R)  ALPHA-MODEL  ALPHA-SECTOR  ALPHA-PREBEND  ROLL-MODEL  YAW
   76     5    TRANSITION     8.00      860.2      1354        40.01        -10.01         30.00        180.00     -.00

 T-INF    P-INF    Q-INF    V-INF     RHO-INF      MU-INF       RE/FT      HREF        STREF
(DEG R)  (PSIA)   (PSIA)   (FT/SEC)  (SLUGS/FT3)  (LB-SEC/FT2)  (FT-1)   (R= .0175FT)  (R= .0175FT)
 98.1     .088    3.947     3882     7.536E-05    7.897E-08   3.705E 06   4.914E-02     2.108E-02

CAMERA        ROLL NO  PAINT TEMP (DEG F)   INITIAL TEMP (DEG F)   SQUARE ROOT (RHOXCXK)   TRAR(TO)   BETA(TO)
TOP(T)         304
                          500                    89                     .0542                    0          0

   PIC NO      TIME DELTIME     H(TO)      H(TO)/HREF   H(.9TO)    H(.9TO)/HREF H( .867TO)  H( .867TO)/HREF  ST(TO)
 T  9550(500)   .03            MODEL HAS NOT REACHED CENTERLINE
 T  9551(500)  1.00            MODEL HAS NOT REACHED CENTERLINE
 T  9552(500)  2.03            MODEL HAS NOT REACHED CENTERLINE
INJECT TIME =      2.33
 T  9553(500)  3.08   1.77    3.257E-02    .6629    4.753E-02    .9673     5.629E-02    1.1455     1.358E-02
 T  9554(500)  4.10   2.80    2.592E-02    .5276    3.782E-02    .7699     4.479E-02     .9118     1.081E-02
 T  9555(500)  5.16   3.85    2.210E-02    .4494    3.225E-02    .6559     3.819E-02     .7768     9.202E-03
 T  9556(500)  6.21   4.90    1.958E-02    .3983    2.858E-02    .5813     3.385E-02     .6885     8.156E-03
 T  9557(500)  7.26   5.95    1.777E-02    .3615    2.593E-02    .5275     3.071E-02     .6248     7.403E-03
 T  9558(500)  8.28   6.99    1.641E-02    .3339    2.395E-02    .4873     2.836E-02     .5772     6.841E-03
 T  9559(500)  9.34   8.03    1.530E-02    .3113    2.233E-02    .4543     2.644E-02     .5380     6.376E-03
 T  9560(500) 10.39   9.08    1.439E-02    .2927    2.100E-02    .4272     2.487E-02     .5060     5.997E-03
 T  9561(500) 11.44  10.13    1.362E-02    .2772    1.988E-02    .4046     2.354E-02     .4792     5.682E-03
 T  9562(500) 12.49  11.18    1.296E-02    .2639    1.892E-02    .3850     2.241E-02     .4559     5.403E-03
 T  9563(500) 13.52  12.21    1.241E-02    .2524    1.811E-02    .3684     2.144E-02     .4363     5.171E-03
 T  9564(500) 14.57  13.26    1.190E-02    .2422    1.737E-02    .3535     2.058E-02     .4187     4.963E-03
 T  9565(500) 15.62  14.31    1.146E-02    .2332    1.672E-02    .3403     1.981E-02     .4031     4.778E-03
 T  9566(500) 16.67  15.36    1.106E-02    .2250    1.614E-02    .3284     1.912E-02     .3890     4.610E-03
 T  9567(500) 17.72  16.41    1.070E-02    .2178    1.562E-02    .3179     1.849E-02     .3764     4.463E-03
              17.65           MODEL HAS LEFT CENTERLINE
 T  9568(500) 18.77  17.46    1.037E-02    .2110    1.514E-02    .3080     1.793E-02     .3648     4.322E-03
      ERROR IN POWRF  BASE<0      A = 6001241704212372 CALL FROM 72651
```

GROUP 77
0304 - 9577

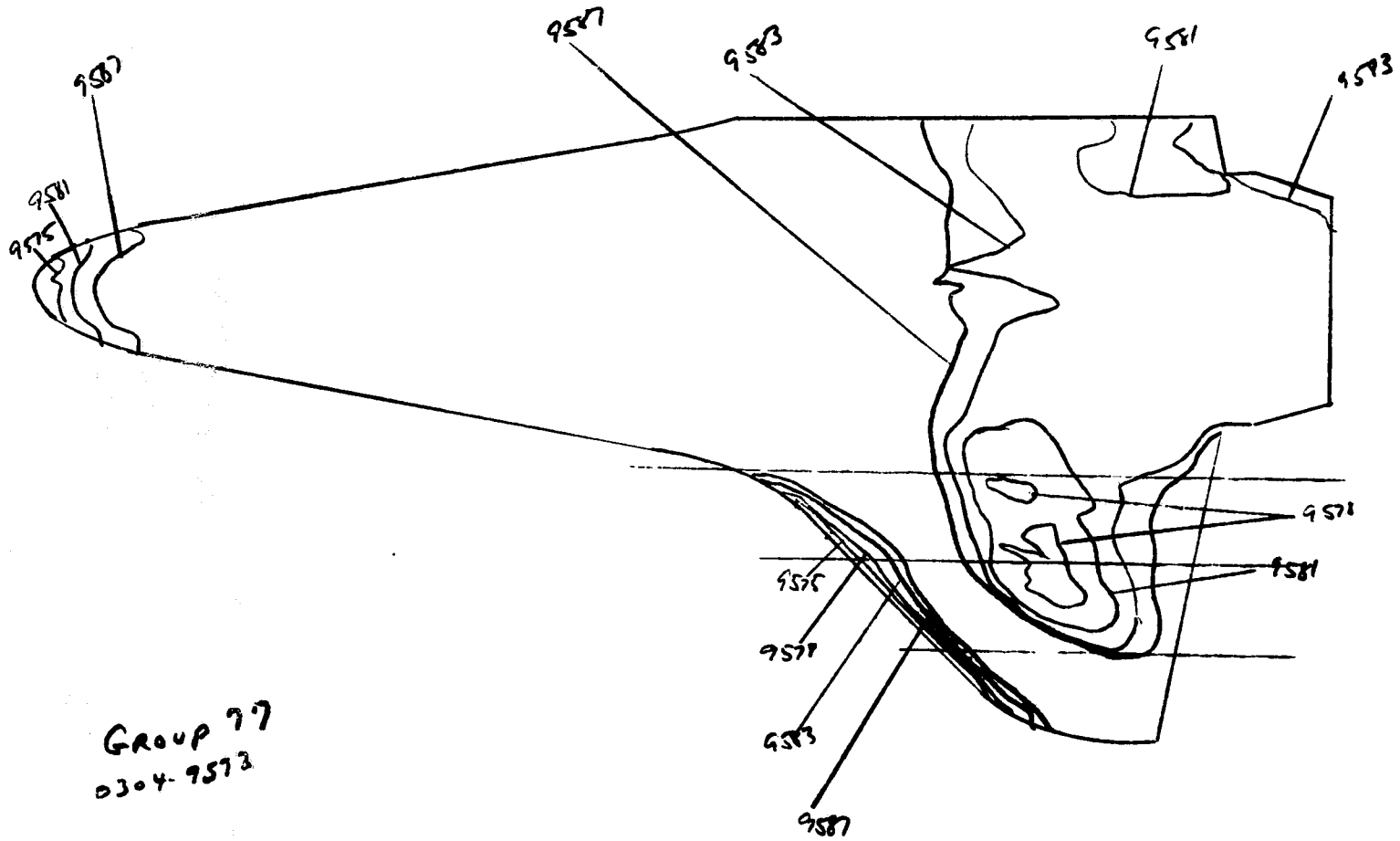

GROUP 77
0304-9573

8/21/74

NASA-RI STS CH25A

V418-83A

AEDC(ARO,INC.) ARNOLD AFS, TENNESSEE
VON KARMAN GAS DYNAMICS FACILITY
50 INCH HYPERSONIC TUNNEL H

GROUP	CONFIG	MODEL	MACH NO	PO(PSIA)	TO(DEG R)	ALPHA-MODEL	ALPHA-SECTOR	ALPHA-PREBEND	ROLL-MODEL	YAW
77	2	40 PERCENT	8.00	859.6	1352	40.01	-10.01	30.00	180.00	-.00

T-INF (DEG R)	P-INF (PSIA)	Q-INF (PSIA)	V-INF (FT/SEC)	RHO-INF (SLUGS/FT3)	MU-INF (LB-SEC/FT2)	RE/FT (FT-1)	HREF (R= .0175FT)	STREF (R= .0175FT)
97.9	.088	3.944	3880	7.542E-05	7.886E-08	3.710E 06	4.911E-02	2.107E-02

CAMERA TOP(T)	ROLL NO	PAINT TEMP (DEG F)	INITIAL TEMP (DEG F)	SQUARE ROOT (RHOXCXK)	TBAR(TO)	BETA(TO)
	304	.500	85	.0542	0	0

	PIC NO	TIME	DELTIME	H(TO)	H(TO)/HREF	H(.9TO)	H(.9TO)/HREF	H(.867TO)	H(.867TO)/HREF	ST(TO)
T	9569(500)	.03		MODEL HAS NOT REACHED CENTERLINE						
T	9570(500)	1.00		MODEL HAS NOT REACHED CENTERLINE						
T	9571(500)	2.03		MODEL HAS NOT REACHED CENTERLINE						
INJECT TIME =		2.30								
T	9572(500)	3.05	1.76	3.310E-02	.6738	4.837E-02	.9848	5.734E-02	1.1674	1.380E-02
T	9573(500)	4.10	2.81	2.619E-02	.5333	3.828E-02	.7794	4.537E-02	.9239	1.092E-02
T	9574(500)	5.16	3.86	2.234E-02	.4547	3.266E-02	.6646	3.871E-02	.7878	9.305E-03
T	9575(500)	6.21	4.91	1.981E-02	.4033	2.895E-02	.5895	3.432E-02	.6988	8.257E-03
T	9576(500)	7.26	5.97	1.798E-02	.3660	2.628E-02	.5349	3.115E-02	.6341	7.492E-03
T	9577(500)	8.31	7.02	1.638E-02	.3376	2.423E-02	.4934	2.872E-02	.5849	6.914E-03
T	9578(500)	9.34	8.04	1.549E-02	.3151	2.263E-02	.4606	2.683E-02	.5460	6.450E-03
T	9579(500)	10.39	9.09	1.456E-02	.2965	2.128E-02	.4334	2.523E-02	.5137	6.072E-03
T	9580(500)	11.44	10.15	1.379E-02	.2808	2.015E-02	.4104	2.389E-02	.4865	5.751E-03
T	9581(500)	12.49	11.20	1.312E-02	.2673	1.918E-02	.3906	2.274E-02	.4630	5.473E-03
T	9582(500)	13.54	12.25	1.255E-02	.2555	1.834E-02	.3735	2.174E-02	.4427	5.233E-03
T	9583(500)	14.59	13.30	1.204E-02	.2452	1.760E-02	.3583	2.086E-02	.4248	5.019E-03
T	9584(500)	15.64	14.35	1.159E-02	.2360	1.694E-02	.3449	2.009E-02	.4089	4.832E-03
T	9585(500)	16.69	15.40	1.119E-02	.2278	1.636E-02	.3330	1.939E-02	.3947	4.665E-03
T	9586(500)	17.75	16.45	1.083E-02	.2204	1.582E-02	.3222	1.876E-02	.3819	4.513E-03
		18.57		MODEL HAS LEFT CENTERLINE						
T	9587(500)	18.80	17.50	1.050E-02	.2138	1.534E-02	.3125	1.819E-02	.3704	4.378E-03
T	9588(500)	19.85	18.56	1.020E-02	.2075	1.490E-02	.3033	1.766E-02	.3596	4.249E-03
T	9589(500)	20.87	19.58	9.924E-03	.2021	1.451E-02	.2954	1.719E-02	.3502	4.140E-03
T	9590(500)	21.93	20.63	9.668E-03	.1969	1.413E-02	.2878	1.675E-02	.3411	4.032E-03
T	9591(500)	22.98	21.68	9.431E-03	.1921	1.378E-02	.2808	1.634E-02	.3328	3.935E-03
T	9592(500)	24.03	22.73	9.210E-03	.1876	1.346E-02	.2742	1.596E-02	.3250	3.842E-03

```
                                    ****************
                                    * UNCLASSIFIED *
                                    ****************
                                        8/21/74

NASA-RI STS OH25A                    AEDC(ARO,INC.) ARNOLD AFS, TENNESSEE
                                      VON KARMAN GAS DYNAMICS FACILITY
V413-83A                                 50 INCH HYPERSONIC TUNNEL B

GROUP  CONFIG    MODEL     MACH NO    PO(PSIA)  TO(DEG R)  ALPHA-MODEL  ALPHA-SECTOR  ALPHA-PREBEND  ROLL-MODEL  YAW
  77      2   40 PERCENT     8.00      859.4      1351        40.01       -10.01         30.00        180.00      -.00

 T-INF    P-INF   Q-INF   V-INF     RHO-INF      MU-INF        RE/FT      HREF          STREF
(DEG R)  (PSIA)  (PSIA)  (FT/SEC)  (SLUGS/FT3)  (LB-SEC/FT2)  (FT-1)     (R= .0175FT)  (R= .0175FT)
 97.9     .088   3.944    3879     7.541E-05    7.885E-08   3.710E 06   4.910E-02     2.107E-02

CAMERA        ROLL NO  PAINT TEMP (DEG F)   INITIAL TEMP (DEG F)   SQUARE ROOT (RHOXCXK)    TBAR(TO)   BETA(TO)
TOP(T)          304
                          500                  85                   .0542                   5.144E-01  8.1027E-01

   PIC NO     TIME DELTIME      H(TO)      H(TO)/HREF   H(.9TO)    H(.9TO)/HREF H( .867TO)  H( .867TO)/HREF  ST(TO)
      ERROR IN POWRF  BASE<0      A = 6001241740736305 CALL FROM 72651
```

GROUP 78
0304-9596

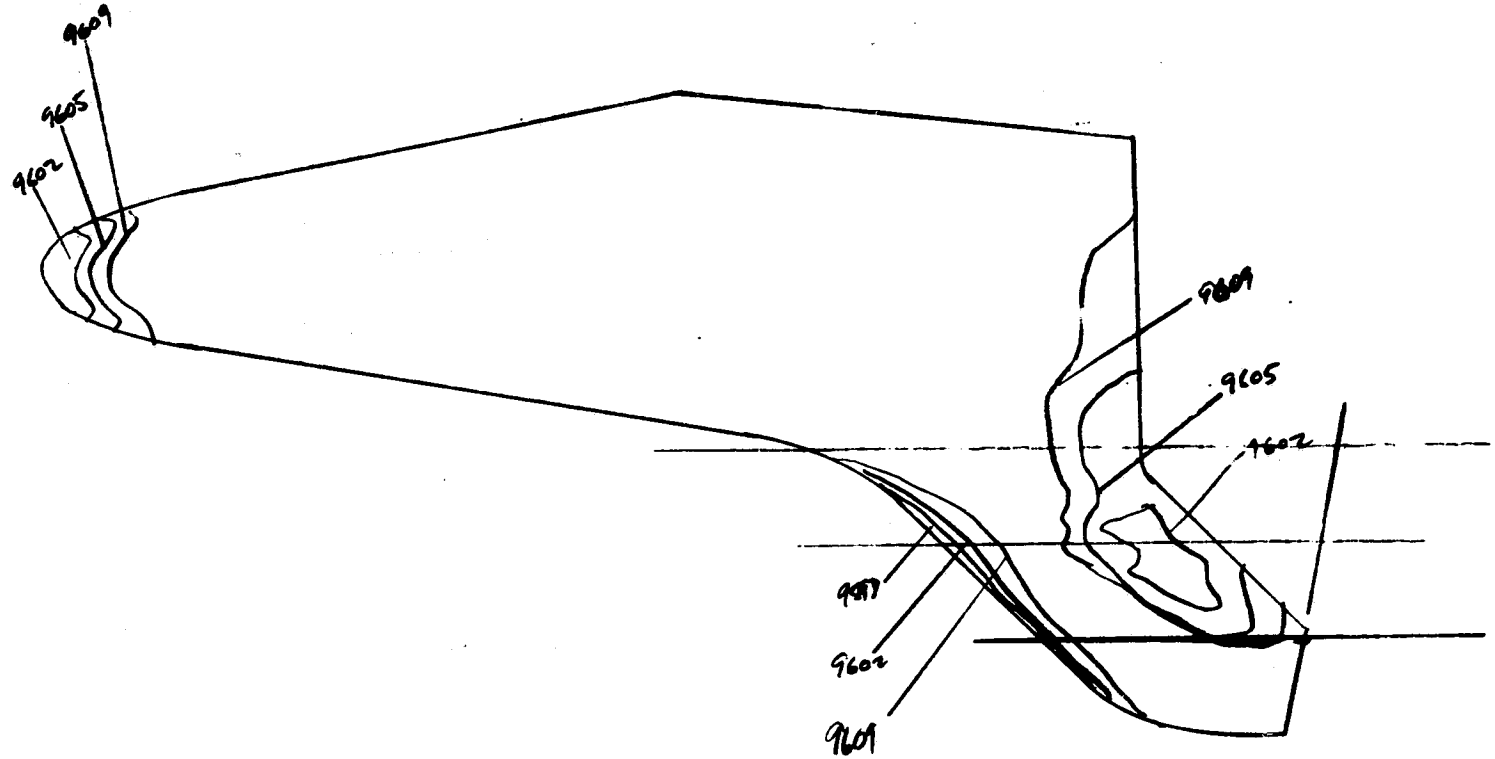

****
* UNCLASSIFIED *
****

8/21/74

NASA-RI STS OM25A

AEDC(ARO,INC.) ARNOLD AFS, TENNESSEE
VON KARMAN GAS DYNAMICS FACILITY
50 INCH HYPERSONIC TUNNEL B

V418-83A

GROUP	CONFIG	MODEL	MACH NO	PO(PSIA)	TO(DEG R)	ALPHA-MODEL	ALPHA-SECTOR	ALPHA-PREBEND	ROLL-MODEL	YAW
7A	4	LEADING EDGE	8.00	860.6	1351	40.01	-10.01	30.00	180.00	-.00

T-INF (DEG R)	P-INF (PSIA)	Q-INF (PSIA)	V-INF (FT/SEC)	RHO-INF (SLUGS/FT3)	MU-INF (LB-SEC/FT2)	RE/FT (FT-1)	HREF (H= .0175FT)	STREF (H= .0175FT)
97.7	.088	3.949	3878	7.555E-05	7.881E-08	3.718E 06	4.913E-02	2.105E-02

CAMERA	ROLL NO	PAINT TEMP (DEG F)	INITIAL TEMP (DEG F)	SQUARE ROOT (RHOXCXK)	TBAR(TO)	BETA(TO)
TOP(T)	304	500	90	.0542	0	0

	PIC NO	TIME	DELTIME	H(TO)	H(TO)/HREF	H(.9TO)	H(.9TO)/HREF	H(.867TO)	H(.867TO)/HREF	ST(TO)
T	9593(500)	.03		MODEL HAS NOT REACHED CENTERLINE						
T	9594(500)	1.00		MODEL HAS NOT REACHED CENTERLINE						
T	9595(500)	2.03		MODEL HAS NOT REACHED CENTERLINE						
INJECT TIME =		2.28								
T	9596(500)	3.05	1.77	3.268E-02	.6650	4.781E-02	.9728	5.671E-02	1.1538	1.360E-02
T	9597(500)	4.10	2.83	2.590E-02	.5271	3.789E-02	.7711	4.494E-02	.9146	1.078E-02
T	9598(500)	5.16	3.88	2.211E-02	.4500	3.235E-02	.6583	3.837E-02	.7808	9.204E-03
T	9599(500)	6.21	4.93	1.961E-02	.3992	2.869E-02	.5840	3.403E-02	.6926	8.166E-03
T	9600(500)	7.26	5.98	1.781E-02	.3623	2.605E-02	.5301	3.090E-02	.6287	7.412E-03
T	9601(500)	8.31	7.03	1.642E-02	.3341	2.402E-02	.4888	2.849E-02	.5797	6.833E-03
T	9602(500)	9.34	8.06	1.534E-02	.3123	2.244E-02	.4569	2.662E-02	.5419	6.391E-03
T	9603(500)	10.39	9.11	1.443E-02	.2936	2.111E-02	.4295	2.503E-02	.5094	6.006E-03
T	9604(500)	11.44	10.16	1.366E-02	.2781	1.999E-02	.4069	2.370E-02	.4826	5.691E-03
T	9605(500)	12.49	11.21	1.300E-02	.2647	1.902E-02	.3872	2.256E-02	.4592	5.414E-03
T	9606(500)	13.54	12.26	1.243E-02	.2531	1.819E-02	.3702	2.158E-02	.4391	5.178E-03
T	9607(500)	14.59	13.31	1.193E-02	.2429	1.746E-02	.3554	2.071E-02	.4215	4.970E-03
T	9608(500)	15.64	14.36	1.149E-02	.2338	1.681E-02	.3420	1.993E-02	.4056	4.781E-03
T	9609(500)	16.69	15.42	1.109E-02	.2257	1.622E-02	.3302	1.924E-02	.3916	4.616E-03
T	9610(500)	17.75	16.47	1.073E-02	.2184	1.570E-02	.3195	1.862E-02	.3790	4.469E-03
T	9611(500)	18.80	17.52	1.040E-02	.2117	1.522E-02	.3097	1.805E-02	.3673	4.330E-03
		19.12		MODEL HAS LEFT CENTERLINE						
T	9612(500)	19.85	18.57	1.010E-02	.2056	1.478E-02	.3008	1.753E-02	.3568	4.206E-03
T	9613(500)	20.90	19.62	9.830E-03	.2001	1.438E-02	.2927	1.706E-02	.3472	4.094E-03

ERROR IN POWRF BASE<0 A = 6001241647466712 CALL FROM 72651

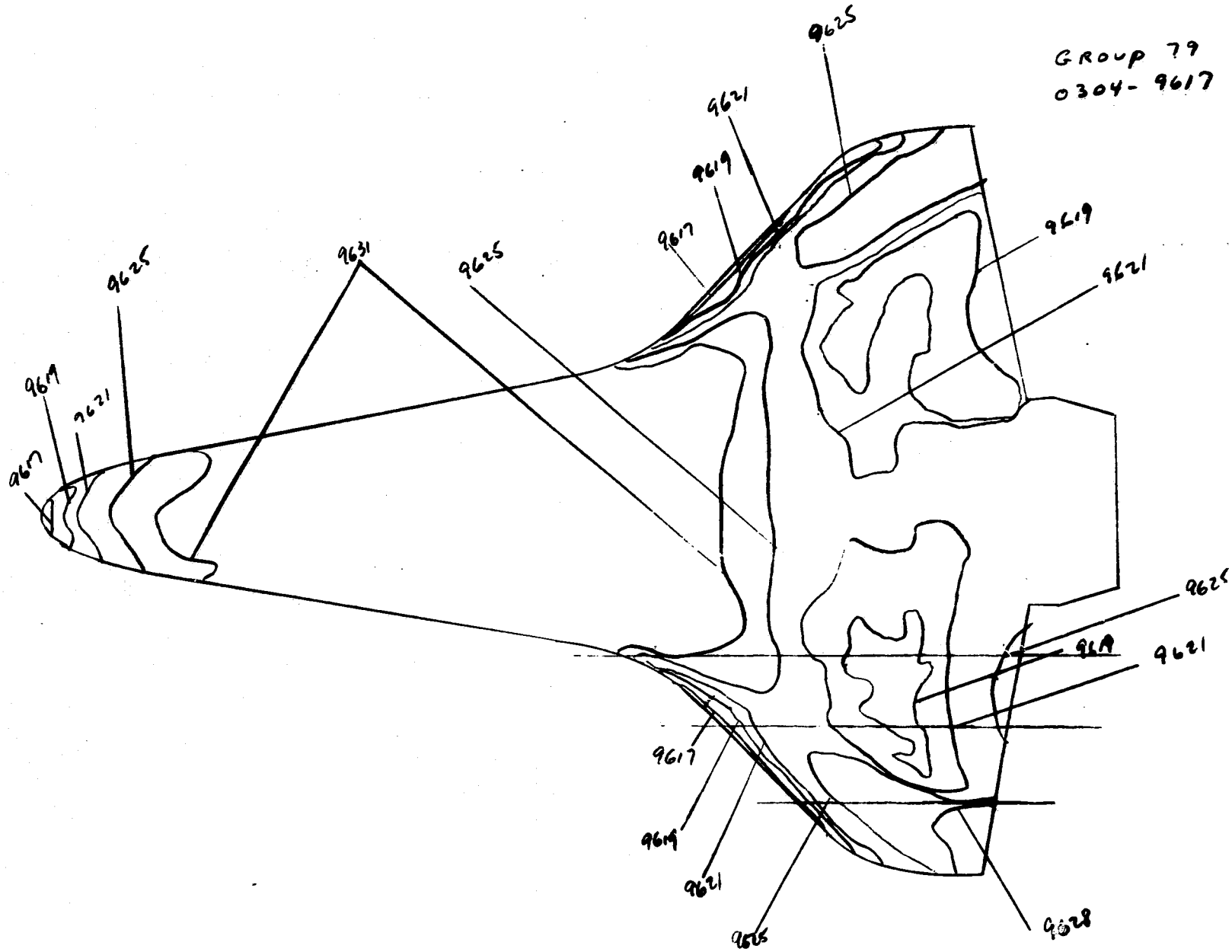
GROUP 79
0304-9617
9625
9621
9619
9617
9619
9621
9631
9625
9625
9619
9621
9617
9625
9619
9621
9617
9619
9621
9625
9628

```
                                        ****************
                                        * UNCLASSIFIED *
                                        ****************
                                              8/21/74

NASA-RI STS OH25A                   AEDC(ARO,INC.) ARNOLD AFS, TENNESSEE
                                     VON KARMAN GAS DYNAMICS FACILITY
V418-83A                               50 INCH HYPERSONIC TUNNEL B

 GROUP  CONFIG    MODEL     MACH NO    PO(PSIA)  TO(DEG R)  ALPHA-MODEL  ALPHA-SECTOR  ALPHA-PREBEND  ROLL-MODEL  YAW
  79      1     GREITER      8.00      860.8      1352        40.00        -10.00         30.00        180.00     -.00

 T-INF    P-INF   Q-INF   V-INF     RHO-INF      MU-INF       RE/FT      HREF          STREF
(DEG R)  (PSIA)  (PSIA)  (FT/SEC)  (SLUGS/FT3)  (LB-SEC/FT2)  (FT-1)    (R= .0175FT)  (R= .0175FT)
 97.9     .088   3.950    3880     7.552E-05    7.886E-08   3.716E 06   4.914E-02     2.106E-02

 CAMERA        ROLL NO  PAINT TEMP (DEG F)   INITIAL TEMP (DEG F)   SQUARE ROOT (RHOXCXK)   TBAR(TO)   BETA(TO)
 IOF(T)         304
                                400                  92                     .0555                   0          0

    PIC NO      TIME DELTIME      H(TO)      H(TO)/HREF   H(.9TO)    H(.9TO)/HREF H( .867TO)  H( .867TO)/HREF  ST(TO)
 T  9614(400)     0            MODEL HAS NOT REACHED CENTERLINE
 T  9615(400)   .98            MODEL HAS NOT REACHED CENTERLINE
 T  9616(400)  2.03            MODEL HAS NOT REACHED CENTERLINE
 INJECT TIME =      2.28
 T  9617(400)  3.05   1.77    2.091E-02    .4254     2.808E-02    .5713     3.171E-02    .6450     8.751E-03
 T  9618(400)  4.10   2.83    1.657E-02    .3372     2.225E-02    .4528     2.513E-02    .5112     6.936E-03
 T  9619(400)  5.16   3.88    1.415E-02    .2879     1.900E-02    .3866     2.145E-02    .4364     5.922E-03
 T  9620(400)  6.18   4.90    1.258E-02    .2559     1.689E-02    .3436     1.907E-02    .3880     5.263E-03
 T  9621(400)  7.23   5.95    1.142E-02    .2323     1.533E-02    .3120     1.731E-02    .3522     4.781E-03
 T  9622(400)  8.28   7.01    1.053E-02    .2141     1.413E-02    .2875     1.596E-02    .3246     4.402E-03
 T  9623(400)  9.34   8.06    9.816E-03    .1996     1.318E-02    .2681     1.488E-02    .3027     4.106E-03
 T  9624(400) 10.39   9.11    9.232E-03    .1878     1.240E-02    .2522     1.400E-02    .2847     3.864E-03
 T  9625(400) 11.44  10.16    8.741E-03    .1778     1.174E-02    .2388     1.325E-02    .2696     3.658E-03
 T  9626(400) 12.49  11.21    8.321E-03    .1692     1.117E-02    .2272     1.262E-02    .2566     3.480E-03
 T  9627(400) 13.52  12.24    7.965E-03    .1620     1.069E-02    .2175     1.207E-02    .2456     3.332E-03
 T  9628(400) 14.57  13.29    7.643E-03    .1555     1.026E-02    .2088     1.159E-02    .2357     3.199E-03
 T  9629(400) 15.62  14.34    7.358E-03    .1496     9.880E-03    .2009     1.115E-02    .2269     3.077E-03
 T  9630(400) 16.67  15.39    7.102E-03    .1445     9.536E-03    .1941     1.077E-02    .2191     2.974E-03
 T  9631(400) 17.72  16.44    6.871E-03    .1398     9.226E-03    .1878     1.042E-02    .2120     2.877E-03
              18.47           MODEL HAS LEFT CENTERLINE
 T  9632(400) 18.77  17.49    6.662E-03    .1355     8.945E-03    .1820     1.010E-02    .2054     2.787E-03
 T  9633(400) 19.82  18.54    6.470E-03    .1316     8.688E-03    .1767     9.809E-03    .1995     2.707E-03
      ERROR IN POWRF  BASE<0      A = 6001241612743472 CALL FROM 72651
```

GROUP 88
0304- 9637

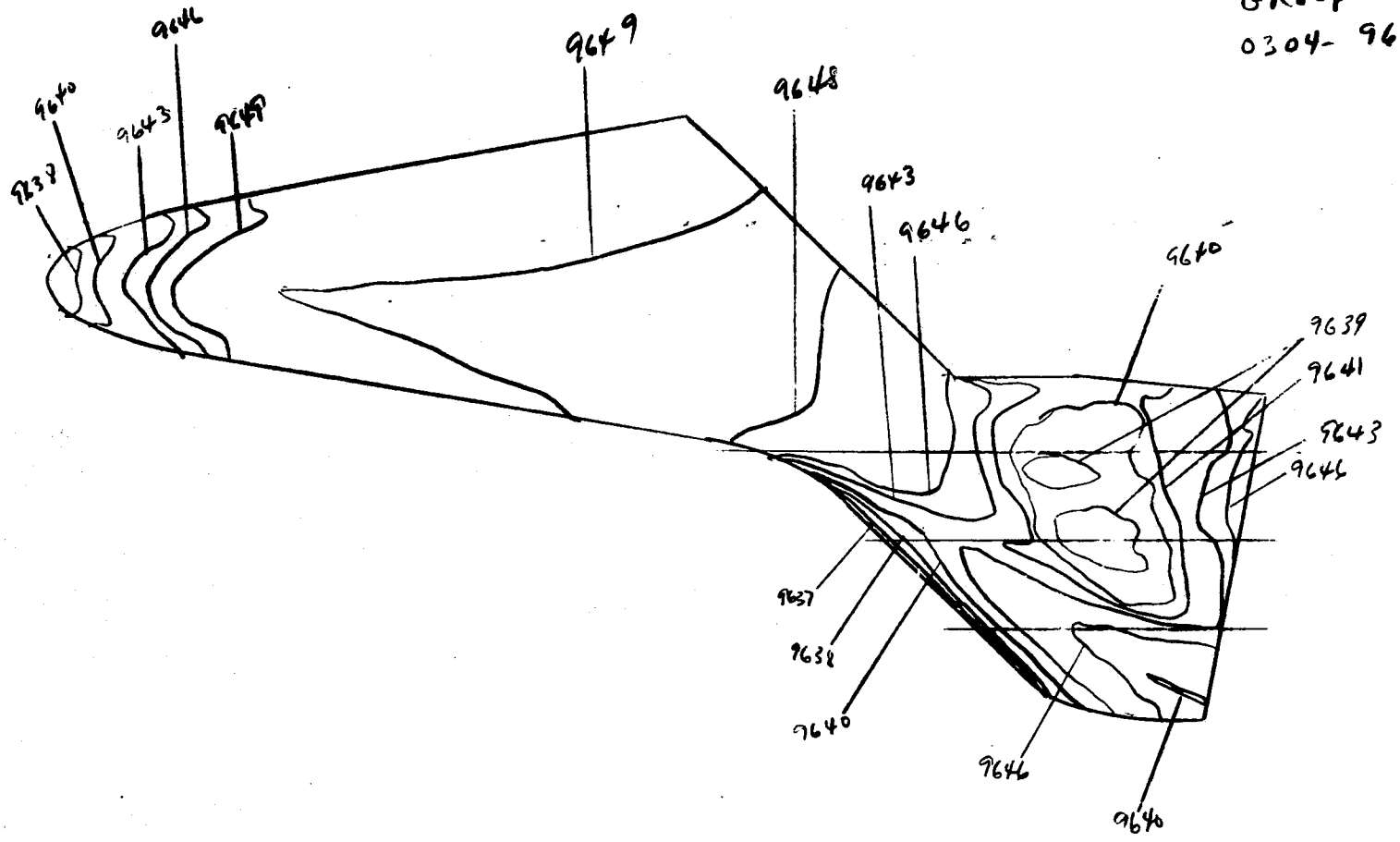

****
* UNCLASSIFIED *
****

8/21/74

NASA-RI STS OH25A

AEDC(ARO.INC.) ARNOLD AFS, TENNESSEE
VON KARMAN GAS DYNAMICS FACILITY
50 INCH HYPERSONIC TUNNEL B

V418-83A

GROUP	CONFIG	MODEL	MACH NO	PO(PSIA)	TO(DEG R)	ALPHA-MODEL	ALPHA-SECTOR	ALPHA-PREREND	ROLL-MODEL	YAW
80	5	TRANSITION	8.00	863.9	1354	40.00	-10.00	30.00	180.00	-.00

T-INF (DEG R)	P-INF (PSIA)	Q-INF (PSIA)	V-INF (FT/SEC)	RHO-INF (SLUGS/FT3)	MU-INF (LB-SEC/FT2)	RE/FT (FT-1)	HREF (R= .0175FT)	STREF (H= .0175FT)
96.1	.088	3.964	3883	7.567E-05	7.899E-08	3.720E 06	4.924E-02	2.104E-02

CAMERA	ROLL NO	PAINT TEMP (DEG F)	INITIAL TEMP (DEG F)	SQUARE ROOT (RHOXCXK)	TBAR(TO)	BETA(TO)
TOP(T)	304	400	89	.0555	0	0

	PIC NO	TIME	DELTIME	H(TO)	H(TO)/HREF	H(.9TO)	H(.9TO)/HREF	H(.867TO)	H(.867TO)/HREF	ST(TO)
T	9634(400)	.03		MODEL HAS NOT REACHED CENTERLINE						
T	9635(400)	1.00		MODEL HAS NOT REACHED CENTERLINE						
T	9636(400)	2.03		MODEL HAS NOT REACHED CENTERLINE						
INJECT TIME =		2.28								
T	9637(400)	3.08	1.80	2.085E-02	.4232	2.796E-02	.5676	3.155E-02	.6405	8.699E-03
T	9638(400)	4.10	2.83	1.664E-02	.3378	2.231E-02	.4530	2.518E-02	.5111	6.943E-03
T	9639(400)	5.16	3.98	1.420E-02	.2881	1.905E-02	.3964	2.149E-02	.4360	5.918E-03
T	9640(400)	6.21	4.93	1.260E-02	.2557	1.690E-02	.3429	1.906E-02	.3869	5.252E-03
T	9641(400)	7.26	5.98	1.144E-02	.2322	1.534E-02	.3114	1.731E-02	.3513	4.771E-03
T	9642(400)	8.31	7.03	1.055E-02	.2142	1.415E-02	.2873	1.596E-02	.3242	4.405E-03
T	9643(400)	9.36	8.08	9.839E-03	.1997	1.319E-02	.2679	1.489E-02	.3023	4.106E-03
T	9644(400)	10.41	9.13	9.255E-03	.1879	1.241E-02	.2520	1.400E-02	.2843	3.862E-03
T	9645(400)	11.46	10.18	8.764E-03	.1780	1.175E-02	.2387	1.326E-02	.2693	3.660E-03
T	9646(400)	12.49	11.21	8.354E-03	.1695	1.120E-02	.2273	1.264E-02	.2565	3.483E-03
T	9647(400)	13.54	12.26	7.988E-03	.1621	1.071E-02	.2174	1.209E-02	.2453	3.331E-03
T	9648(400)	14.59	13.31	7.666E-03	.1556	1.028E-02	.2086	1.160E-02	.2354	3.196E-03
T	9649(400)	15.64	14.36	7.380E-03	.1498	9.897E-03	.2009	1.117E-02	.2267	3.079E-03
T	9650(400)	16.69	15.42	7.124E-03	.1446	9.554E-03	.1939	1.078E-02	.2188	2.971E-03
T	9651(400)	17.75	16.47	6.893E-03	.1399	9.244E-03	.1876	1.043E-02	.2117	2.874E-03
		18.02		MODEL HAS LEFT CENTERLINE						
T	9652(400)	18.80	17.52	6.683E-03	.1357	8.962E-03	.1819	1.011E-02	.2053	2.788E-03

ERROR IN POWRF BASE<0 A = 6001241647666712 CALL FROM 72651

GROUP 81
0304-9656

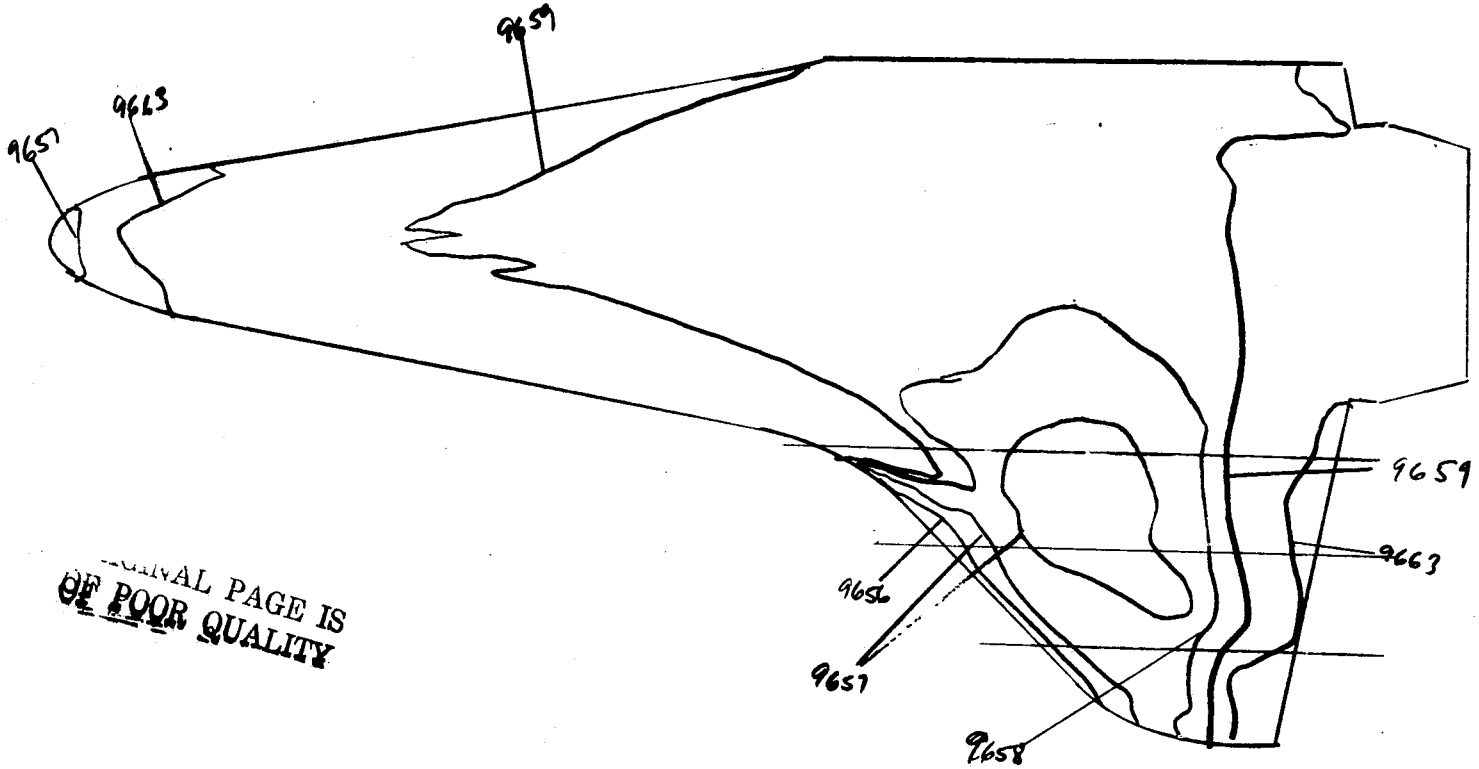

ORIGINAL PAGE IS
OF POOR QUALITY

```
                                        ****************
                                        * UNCLASSIFIED *
                                        ****************
                                            8/21/74

NASA-RI STS OM25A                   AEDC(ARO,INC.) ARNOLD AFS, TENNESSEE
                                     VON KARMAN GAS DYNAMICS FACILITY
V418-83A                               50 INCH HYPERSONIC TUNNEL B

 GROUP  CONFIG    MODEL      MACH NO    PO(PSIA)  TO(DEG R)  ALPHA-MODEL  ALPHA-SECTION  ALPHA-PREBEND  ROLL-MODEL  YAW
   E1      2   40 PERCENT     8.00       861.7      1355        40.00        -10.00         30.00        180.00     -.00

 T-INF    P-INF   Q-INF   V-INF     RHO-INF       MU-INF        RE/FT       HREF          STREF
(DEG R)  (PSIA)  (PSIA)  (FT/SEC)  (SLUGS/FT3)  (LB-SEC/FT2)   (FT-1)    (H= .0175FT)  (H= .0175FT)
 98.2     .088    3.954    3884    7.543E-05     7.904E-08   3.707E 06   4.919E-02     2.108E-02

CAMERA      ROLL NO  PAINT TEMP (DEG F)   INITIAL TEMP (DEG F)   SQUARE ROOT (RHOXCXK)   TBAR(TO)   BETA(TO)
IOP(T)       304
                        400                    86                      .0555                   0          0

   PIC NO      TIME DELTIME    H(TO)      H(TO)/HREF   H(.9TO)    H(.9TO)/HREF H( .867TO)  H( .867TO)/HREF  ST(TO)
T  9653(400)    .03          MODEL HAS NOT REACHED CENTERLINE
T  9654(400)   1.00          MODEL HAS NOT REACHED CENTERLINE
T  9655(400)   2.03          MODEL HAS NOT REACHED CENTERLINE
INJECT TIME =      2.28
T  9656(400)   3.05   1.77   2.116E-02    .4300     2.836E-02    .5765     3.200E-02    .6503     8.852E-03
T  9657(400)   4.10   2.83   1.677E-02    .3408     2.248E-02    .4569     2.536E-02    .5154     7.015E-03
T  9658(400)   5.16   3.88   1.431E-02    .2909     1.919E-02    .3899     2.165E-02    .4399     5.986E-03
T  9659(400)   6.18   4.90   1.273E-02    .2588     1.706E-02    .3469     1.925E-02    .3914     5.329E-03
T  9660(400)   7.23   5.95   1.155E-02    .2349     1.548E-02    .3149     1.747E-02    .3552     4.837E-03
T  9661(400)   8.28   7.01   1.065E-02    .2164     1.428E-02    .2901     1.611E-02    .3273     4.455E-03
T  9662(400)   9.34   8.06   9.930E-03    .2018     1.331E-02    .2705     1.502E-02    .3052     4.153E-03
T  9663(400)  10.39   9.11   9.339E-03    .1898     1.252E-02    .2545     1.413E-02    .2871     3.908E-03
T  9664(400)  11.44  10.16   8.843E-03    .1798     1.185E-02    .2411     1.337E-02    .2719     3.703E-03
T  9665(400)  12.49  11.21   8.418E-03    .1711     1.129E-02    .2294     1.273E-02    .2588     3.523E-03
T  9666(400)  13.54  12.26   8.049E-03    .1637     1.079E-02    .2195     1.217E-02    .2476     3.372E-03
T  9667(400)  14.59  13.31   7.725E-03    .1570     1.036E-02    .2105     1.168E-02    .2375     3.234E-03
              15.02          MODEL HAS LEFT CENTERLINE
T  9668(400)  15.64  14.36   7.437E-03    .1511     9.970E-03    .2026     1.125E-02    .2286     3.111E-03
      ERROR IN POWRF  BASE<0      A = 6001241704212372 CALL FROM 72651
```

GROUP 82
0304-9672

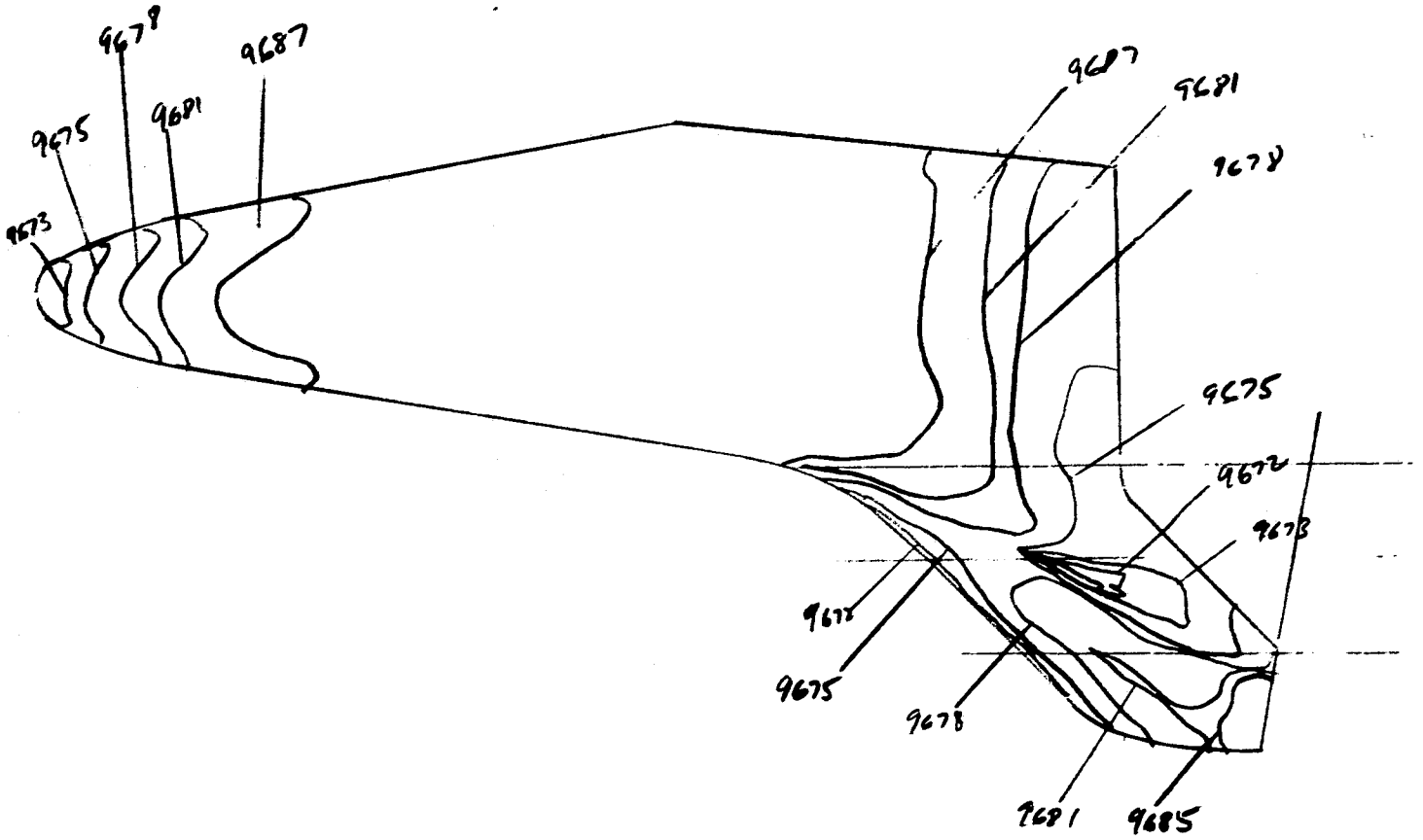

8/21/74

NASA-RI STS OH25A

V418-83A

AEDC(ARO,INC.) ARNOLD AFS, TENNESSEE
VON KARMAN GAS DYNAMICS FACILITY
50 INCH HYPERSONIC TUNNEL B

GROUP	CONFIG	MODEL	MACH NO	PO(PSIA)	TO(DEG R)	ALPHA-MODEL	ALPHA-SECTOR	ALPHA-PREBEND	ROLL-MODEL	YAW
82	4	LEADING EDGE	8.00	861.7	1355	40.01	-10.01	30.00	180.00	-.00

T-INF (DEG R)	P-INF (PSIA)	Q-INF (PSIA)	V-INF (FT/SEC)	RHO-INF (SLUGS/FT3)	MU-INF (LB-SEC/FT2)	RE/FT (FT-1)	HREF (R= .0175FT)	STREF (R= .0175FT)
98.2	.088	3.954	3884	7.541E-05	7.906E-08	3.705E 06	4.919E-02	2.108E-02

CAMERA	ROLL NO	PAINT TEMP (DEG F)	INITIAL TEMP (DEG F)	SQUARE ROOT (RHOXCXK)	TBAR(TO)	BETA(TO)
TOP(T)	304	400	93	.0555	0	0

	PIC NO	TIME	DELTIME	H(TO)	H(TO)/HREF	H(.9TO)	H(.9TO)/HREF	H(.867TO)	H(.867TO)/HREF	ST(TO)
T	9669(400)	.03		MODEL HAS NOT REACHED CENTERLINE						
T	9670(400)	1.00		MODEL HAS NOT REACHED CENTERLINE						
T	9671(400)	2.05		MODEL HAS NOT REACHED CENTERLINE						
INJECT TIME =		2.28								
T	9672(400)	3.08	1.80	2.056E-02	.4180	2.757E-02	.5605	3.111E-02	.6323	8.608E-03
T	9673(400)	4.13	2.85	1.634E-02	.3321	2.191E-02	.4453	2.472E-02	.5024	6.838E-03
T	9674(400)	5.18	3.90	1.397E-02	.2838	1.873E-02	.3805	2.113E-02	.4293	5.842E-03
T	9675(400)	6.23	4.95	1.240E-02	.2519	1.662E-02	.3378	1.875E-02	.3811	5.187E-03
T	9676(400)	7.28	6.00	1.126E-02	.2288	1.510E-02	.3068	1.703E-02	.3461	4.711E-03
T	9677(400)	8.33	7.05	1.039E-02	.2111	1.393E-02	.2831	1.571E-02	.3194	4.347E-03
T	9678(400)	9.39	8.11	9.690E-03	.1969	1.299E-02	.2640	1.466E-02	.2978	4.052E-03
T	9679(400)	10.44	9.16	9.117E-03	.1854	1.222E-02	.2486	1.379E-02	.2804	3.819E-03
T	9680(400)	11.49	10.21	8.634E-03	.1756	1.158E-02	.2355	1.306E-02	.2656	3.618E-03
T	9681(400)	12.54	11.26	8.222E-03	.1671	1.102E-02	.2240	1.244E-02	.2528	3.440E-03
T	9682(400)	13.59	12.31	7.863E-03	.1599	1.054E-02	.2144	1.189E-02	.2419	3.294E-03
T	9683(400)	14.62	13.34	7.554E-03	.1535	1.013E-02	.2058	1.143E-02	.2322	3.160E-03
T	9684(400)	15.67	14.39	7.273E-03	.1478	9.752E-03	.1982	1.100E-02	.2235	3.042E-03
T	9685(400)	16.72	15.44	7.021E-03	.1427	9.414E-03	.1913	1.062E-02	.2159	2.938E-03
T	9686(400)	17.77	16.49	6.794E-03	.1380	9.109E-03	.1851	1.028E-02	.2088	2.841E-03
		18.60		MODEL HAS LEFT CENTERLINE						
T	9687(400)	18.82	17.54	6.587E-03	.1338	8.832E-03	.1795	9.964E-03	.2025	2.755E-03
T	9688(400)	19.87	18.59	6.398E-03	.1300	8.579E-03	.1743	9.678E-03	.1967	2.676E-03