General Disclaimer

One or more of the Following Statements may affect this Document

- This document has been reproduced from the best copy furnished by the organizational source. It is being released in the interest of making available as much information as possible.

- This document may contain data, which exceeds the sheet parameters. It was furnished in this condition by the organizational source and is the best copy available.

- This document may contain tone-on-tone or color graphs, charts and/or pictures, which have been reproduced in black and white.

- This document is paginated as submitted by the original source.

- Portions of this document are not fully legible due to the historical nature of some of the material. However, it is the best reproduction available from the original submission.

Produced by the NASA Center for Aerospace Information (CASI)

NASA TECHNICAL MEMORANDUM

NASA TM X-71764

NASA TM X-71764

(NASA-TM-X-71764) APPLICATION OF REAL-TIME ENGINE SIMULATIONS TO THE DEVELOPMENT OF PROPULSION SYSTEM CONTROLS (NASA) 13 p HC $3.25 CSCL 21E

N75-29106

Unclas

G3/07 31426

APPLICATION OF REAL-TIME ENGINE SIMULATIONS TO THE DEVELOPMENT OF PROPULSION SYSTEM CONTROLS

by J. R. Szuch
Lewis Research Center
Cleveland, Ohio 44135

AUG 1975
RECEIVED
NASA STI FACILITY
INPUT BRANCH

TECHNICAL PAPER to be presented at
Eleventh Propulsion Conference cosponsored by the
American Institute of Aeronautics and Astronautics
and the Society of Automotive Engineers

Anaheim, California, September 29-October 1, 1975

APPLICATION OF REAL-TIME ENGINE SIMULATIONS TO THE DEVELOPMENT OF PROPULSION SYSTEM CONTROLS

J. R. Szuch
National Aeronautics and Space Administration
Lewis Research Center
Cleveland, Ohio 44135

E-8416

Abstract

The development of digital controls for turbojet and turbofan engines can be facilitated by the use of real-time computer simulations of the engines. The engine simulation provides a "test-bed" for evaluating new control laws and for checking and "debugging" control software and hardware prior to engine testing. This paper describes the development and use of real-time, hybrid computer simulations of the Pratt & Whitney TF30-P-3 and F100-PW-100 augmented turbofans in support of a number of controls research programs at the Lewis Research Center. The role of engine simulations in solving the propulsion systems integration problem is also discussed.

Introduction

The development of controls for aircraft propulsion systems depends, to a great extent, on one being able to accurately predict the performance of the aircraft, the propulsion system, and their associated controls. Computer simulations provide a means of analyzing the behavior and interactions of these increasingly complex systems prior to full-scale testing of the hardware. Simulations also serve as aids in solving problems that arise after the development phase is completed.

Of particular interest today are simulations of gas turbine engines and their application to the development of advanced propulsion system controls. This paper describes the development and use of real-time (R-T), hybrid computer simulations of the Pratt & Whitney TF30-P-3[1] and F100-PW-100[2] augmented turbofans in support of a number of controls research programs[3-5] at the Lewis Research Center. In addition to the discussion of these real-time simulations, the role of other types of engine simulations will also be discussed.

Engine Simulations

The complexity of an engine simulation is, of course, determined by the particular application. A simple, choked-orifice representation of a turbojet engine may be adequate when studying the dynamic performance of a supersonic inlet at a given operating condition.[6] There are, however, cases where an engine must be considered as more than just a simple inlet termination. For example, in determining the effect of engine response on an externally blown flap aircraft,[7] a linear, transfer function representation of a two-spool turbofan engine was used. As shown in Fig. 1, the transfer functions related components of engine thrust to a pilot-commanded thrust change. In this case, the engine simulation was combined with a simulation of a STOL transport in a piloted, ground-based simulator at the Ames Research Center. This transfer function approach to engine simulation can be extended to include additional inputs and outputs. Unfortunately, the adequacy of the transfer function models is usually limited to operation around selected operating points due to the nonlinearities of the propulsion system. Therefore, another approach must be taken when analyzing the gross transient behavior of engines and their controls over a range of flight conditions and power settings.

There are a number of wide-range, nonlinear engine simulations currently being used to support controls development programs. These include both steady-state and transient simulations. Steady-state simulations are useful in establishing set-point control schedules and for defining engine limits that the control must not exceed. The most detailed steady-state simulations have been developed by the various engine manufacturers for specific engines and are often updated to reflect actual engine test data. Generalized, steady-state programs[8,9] are also available for simulating a wide range of turbojet and turbofan engine configurations. In general, steady-state simulations are implemented using digital computers because of the digital computer's precision, repeatability, and flexibility.

Transient simulations are also needed as design tools. Again, the most detailed simulations have been developed for specific engines and implemented using digital computers. They do, however, consume much expensive computer time since they require iterative solutions and numerical integration. Transient, digital simulations have also been generalized[10] at the cost of increased computing times. A similar generalized, transient simulation has been developed for the hybrid (analog-digital) computer.[11] Because of its exact integration with respect to time and compromises in modeling detail, this program runs faster than the all-digital simulations. However, it is not fast enough to run in real-time.

Real-Time Engine Simulation

The subject of real-time (R-T) engine simulation is gaining increasing attention because of its application to the evaluation of new digital control hardware and software.[3,12] This concept is illustrated in Fig. 2. Engine running, whether static or in a flying test-bed, is expensive and time-consuming. Hence, a simulation which can reduce the amount of required engine testing is highly desirable. To serve as a realistic test vehicle for a control, the simulation should (1) statically and dynamically represent the performance of all parts of the engine-control loop not available as hardware, (2) provide suitable signals at the control interface (this requires digital-to-analog, D/A and analog-to-digital, A/D conversions if the engine simulation is implemented with a digital computer) and (3) run in real-time so as to realistically interact with the dynamics of the control.

There are a number of factors to consider when selecting a computer for performing R-T simulations.

If a digital computer is used, there is an upper limit on the digital update time (i.e., time required to perform the digital calculations) that must not be exceeded if the closed-loop system's dynamic accuracy and stability are to be maintained over the frequency range of interest. For most turbofan engine simulations, this requires digital update times under 10 milliseconds.[1,2,12] Achieving these update times without sacrificing too much in simulation accuracy is a formidable task. In addition, a general-purpose digital computer may not have the necessary interface (A/D and D/A) capability.

Although they provide the necessary computing speed and interface, analog computers are usually not considered for turbofan engine simulations because of the large number of multivariate functions that have to be generated. These functions are needed to describe the overall performance of the engine's rotating components (i.e., fans, compressors, turbines). The amount of required analog equipment is usually prohibitively large and would require considerable set-up and check-out time. The digital computer is, of course, well suited for the task of function generation.

Real-Time Simulation Using the Hybrid Computer

The hybrid computer, because it includes both a digital and analog computer, can satisfy the requirements of R-T engine simulation. Fig. 3 shows one approach to using the hybrid computer in this application. The digital portion of the hybrid computer can be used to perform all of the required function generation. This is the approach that is used in the TF30 and F100 simulations discussed in the next section. Because a digital computer is used, the upper limit on update time must be adhered to. Additional calculations may be performed digitally if these can be completed within the allowable update interval. The analog portion of the hybrid computer is available to perform the remaining calculations which include the integration associated with the engine dynamics. The analog portion of the hybrid computer also provides the necessary control interface since D/A and A/D conversions are performed by the hybrid computer interface. In addition to performing the calculations associated with function generation, the hybrid's digital computer can also be used to automatically set-up and check-out the analog portion of the simulation.

TF30 and F100 R-T Simulations

In support of controls research programs involving the Pratt & Whitney TF30-P-3 and F100-PW-100 augmented turbofans, R-T hybrid computer simulations of those engines have been developed at Lewis.[1,2] Fig. 4 illustrates, in block diagram form, the approach taken in modeling those engines. The engine models are patterned, as much as possible, after the engine manufacturer's digital (baseline) simulations. The bivariate function data, defining the performance of the rotating components, have been extracted from the digital simulations. Intercomponent volumes are assumed at engine locations where either (1) gas dynamics are considered to be important or (2) gas dynamics are required to eliminate the need for iterative solutions. Time-dependent forms of the continuity, energy, and state equations are solved in each intercomponent volume. The rotor speeds are computed from angular momentum equations. The effects of fluid momentum on the engine dynamics are included in the duct and augmentor models.

A number of assumptions and model simplifications are necessary to satisfy the R-T requirement with a reasonable amount of computing equipment. In the TF30 and F100 R-T simulations, these include the following: (1) fan and compressor temperature ratios are assumed to be piecewise linear functions of the corresponding pressure ratios; this eliminates the need for efficiency map generation and exponentiation in the digital computer, (2) the static pressure balance between core and duct streams, assumed in the baseline simulations, is represented by a constant ratio of total pressures in the R-T simulations, (3) gas properties such as specific heats are assumed to be constant except for the fan and compressor-discharge specific heats which are assumed to be linear functions of temperature; the linear functions provide a good match of design rotor speeds along a given operating line. Steady-state and transient evaluations of the R-T simulations have shown that these assumptions do not significantly reduce the accuracy of the simulations.

The equations describing the TF30 and F100 mathematical models have been programmed on the Lewis Research Center's EAI Model 690 hybrid computer and EAI Model 680 analog computer. An additional EAI Model 231R analog computer is required for the TF30 simulation because of its more complicated configuration. As previously stated, the digital portion of the hybrid computer is used primarily for the function generation. In each of the R-T simulations, eight bivariate table lookups are required and consume approximately 4.7 milliseconds. The function generation routine that is used is discussed in the next section. In the F100 simulation, an engine thrust calculation has been added to the digital program resulting in a total update time of 6.5 milliseconds. Control inputs, such as fuel flows and nozzle areas, are provided by digital control systems programmed on the Lewis Research Center's SEL810B computer.[13]

MAP2 Function Routine

Because of the nature of the fan and compressor performance maps (Fig. 5), rectilinear interpolation cannot be used to generate these functions. Therefore, a radial-interpolation, bivariate-function generation routine, MAP2 has been developed at Lewis for generating this type of function. The MAP2 routine is based on a routine developed earlier[14] for the same application. Tabular data for up to twelve functions of six pairs of independent variables are stored in a common block and shared by MAP2 and the calling program. Both FORTRAN and assembly language versions of MAP2 have been developed. For the R-T simulations, the assembly language version is used. An additional entry point MAP2L has been added to the assembly language version to allow multiple functions of a single pair of independent variables to be generated with only one table search. Because of its favorable qualities, MAP2-MAP2L is also used to perform the turbine function generation although rectilinear interpolation routines could be used instead.

R-T Simulation Verification

Steady-State

The steady-state accuracy of the R-T simulations can be evaluated by running the simulations with fixed control inputs corresponding to the baseline simulation values at selected operating conditions. This open-loop approach allows simulation and control implementation errors to be isolated. The resulting values of simulated engine variables such as rotor speeds can be compared with baseline simulation and/or engine test data. Fig. 6 shows results from a comparison of F100 R-T simulation and experimental data at sea-level, static conditions. These results, together with results from more comprehensive comparisons,[1,2] indicate that the R-T hybrid simulations do adequately represent the steady-state performance of the TF30-P-3 and F100-PW-100 turbofans.

Transient

The R-T simulations should also accurately predict the transient performance of the engines. One factor that can cause dynamic errors and, ultimately, instabilities in a hybrid simulation is the digital update time which includes the time required to sample the analog input variables, perform the necessary calculations, and transfer the digital outputs to the analog computer. The digital update time appears as a time delay to the analog computer and will generate dynamic errors if it is too long. This problem has been analyzed[15,16] for the simple one-loop case. Unfortunately, the turbofan engine presents a more complicated problem for analysis. In the earliest R-T simulations,[1,2] all analog inputs were sampled at the beginning of the digital cycle and all outputs were transferred to the analog after all calculations were completed. From a time delay, or phase shift, point of view this is the worst approach.

Fig. 7 shows how the time delay can affect the simulated response of the F100 compressor rotor speed to sinusoidal oscillations in main burner fuel flow. The effect of the digital process can be seen by comparing the real-time results with data obtained by running the simulation slower than real-time. Slow-time operation effectively speeds up the digital computer, thus minimizing its effect on the frequency response. The comparison indicates that the digital contributes over 80 degrees of phase shift at 8 hertz when running in real-time.

One approach to minimizing the unwanted phase shift is to sample analog inputs as needed and output digital data to the analog as available. This approach is illustrated in Fig. 8. While the total digital update time is slightly increased due to less efficient sampling and outputting of data, the reduction in calculation time for each loop can result in a significant reduction in the phase shift. For the response shown in Fig. 7, approximately one-half of the unwanted phase shift was eliminated by using this approach. Based on these results, the earlier R-T simulations have been modified accordingly.

As in the case of the steady-state evaluation, the transient evaluation of the R-T simulations can best be accomplished in an open-loop fashion. The control inputs to the engine simulation are scheduled as functions of time to match closed-loop, baseline simulation or experimental data. Fig. 9 shows a comparison of R-T simulation and experimental responses of F100 engine variables to an idle-to-intermediate power lever "slam." The experimental data were obtained in a Lewis altitude test facility which simulated the 30 000 foot, 0.7 Mn condition. Experience with both the TF30 and F100 R-T simulations has indicated that the main burner specific heat ratio has to be decreased by a factor of 20 to 25 to match baseline simulation responses. This appears to be a simple way of accounting for the transient effects of factors such as heat transfer to the engine metal[17] without further complicating the model. Results such as those shown in Fig. 9 indicate that this reduction does result in good agreement between the R-T simulation and actual engine responses. The validity of this approach should be further tested as more experimental data becomes available.

TF30 Digital Control Evaluation

The R-T simulation of the TF30-P-3 engine has been used to evaluate a digital computer implementation of the standard bill-of-materials (BOM) control modes.[3] This evaluation is intended to demonstrate an efficient utilization of the digital control computer's[13] core capacity and computing time so as to provide sufficient capacity for extended control functions such as integrated inlet and engine control,[18] and fail-operational control.[4,5] Control accuracy and dynamics, comparable to the hydromechanical BOM system, must also be demonstrated.

In particular, the R-T simulation provides a means of predicting (1) the stability of internal dynamic loops in the control, (2) the effects of control calculation and update times on the engine performance and (3) the ability of the digital control to perform statically and dynamically over a wide range of flight conditions and power settings.

The R-T evaluation of the TF30 digital control has shown that all of the stated objectives can be satisfied by the digital version of the BOM control modes.[3] Fig. 10 shows a typical result obtained during that evaluation. The effect of increasing the control update time on the response of the simulated engine variables to an idle-to-intermediate power lever "slam" is shown. For this case, the control update time and calculation time were equal. Performance degradation is observed for update times greater than 20 milliseconds.

Studies were also performed with a fixed control calculation time of 3.2 milliseconds and increased update times. The idle time (difference between the calculation and update times) can be used for the previously mentioned control functions. Results from those studies indicate that control update times as great as 50 milliseconds can be tolerated.

Sensor Fail-Operational Control Development

To date, the most extensive use of the R-T hybrid simulations at Lewis has been in support of sensor fail-operational control studies.[4,5] For digital control to be viable, steps must be taken to ensure that the reliability of full-authority, flight-qualified digital control systems matches

that of the well-proven hydromechanical systems. This applies to all aspects of the control such as sensors, actuators, and the computer itself. Redundant sensors and actuators may not be practical in certain applications due to weight and installation restrictions. An alternate approach for handling sensor failures is fail-operational control[4,5] where estimates of failed-sensor outputs are used by the control when failure of one or more sensors is detected. These estimates are based on information stored in the digital control computer.

In lieu of a full-scale engine test program, the R-T simulation of the TF30-P-3 engine is being used to evaluate a progression of fail-operational control schemes. Fig. 11 illustrates how a sensor fail-operational control works. The basic scheme involves estimating a failed-sensor output from algebraic functions of the working sensor outputs. The functional data can be obtained at various operating conditions, both steady-state and transient, and averaged appropriately. This approach has been integrated with the digital version of the TF30-P-3 BOM control and has been evaluated on the R-T simulation.[5] The fail-operational control adds a maximum of 13 milliseconds to the 3.2 milliseconds required by the BOM control. The fail-operational control (including stored data) added about 6.6 K to the 5 K of core storage required by the BOM control. The evaluation of the fail-operational control using the R-T simulation has shown that: (1) for nonaugmented operation, three out of the four engine sensors can be failed without violating engine limits or significantly degrading engine performance, (2) for augmented operation, only one sensor can be failed at a time and a power lever rate limit has to be imposed; this requirement can be attributed to the existence of a sensitive, integrator loop in the BOM augmentor control, and (3) satisfactory transient results are obtained even when the stored functional data has been obtained at steady-state conditions.

Fig. 12 shows the effect of a simulated compressor rotor speed sensor failure on the response of engine thrust to an idle-to-maximum power lever "slam." In this case, the stored engine data was "learned" at a different flight condition than that at which the failure occurred. The thrust response is somewhat slower with the failed sensor, particularly during the augmentor transient. The final thrust value is somewhat higher with the speed sensor failure than without. The augmentor fuel flows appear to be quite sensitive to the estimated speed schedule.

Multivariable Controls Development

Over the past several years, aircraft operational requirements have dictated the development of gas turbine engines with increased performance over a wider operating envelope. These development efforts have resulted in today's complex augmented turbofans and will result in even more complex variable-cycle engines in the future. Control of these engines will be more difficult and existing control design techniques, which utilize loop-by-loop logic development, will not be able to solve the multivariable controls problem in an orderly and systematic manner.

One approach to the multivariable control synthesis problem is the application of modern control theory. The Air Force and NASA are currently funding a multivariable controls development program for the F100 engine. Systems Control, Inc., with the support of Pratt & Whitney, is applying linear quadratic regulator (LQR) theory[19] to the F100 controls problem. The resulting control will be evaluated on the R-T engine simulation prior to full-scale engine testing.

The LQR design procedure will utilize linear models of the F100 engine. Each of the linear models will define the dynamic behavior of the engine at a specified flight condition and power setting. These models are being generated by Pratt & Whitney from baseline simulation data. Since the multivariable control is to be evaluated on the R-T simulation, agreement between baseline digital and R-T hybrid simulations is necessary if delays in the program are to be avoided. One way of comparing the simulations is to generate linear models with each simulation and then compare transient responses obtained with the linear models. Programs have been developed for automatically generating the linear model coefficients from the sixteenth-order hybrid simulation. Fig. 13 illustrates how well the resulting linear models represent the nonlinear simulation. The responses of selected engine variables to a step increase in main burner fuel flow are shown. These results indicate that the linear models, generated by the hybrid simulation, can be used in an off-line comparison with linear models generated by the baseline digital simulation. Any differences between the digital and hybrid simulations can then be resolved prior to the multivariable control evaluation.

Conclusions

Computer simulations of gas turbine engines play an important role in the development of advanced propulsion system controls. In particular, a real-time simulation of a turbojet or turbofan engine can serve as a test-bed for evaluating actual control hardware and software prior to full-scale engine testing. Accurate, real-time, nonlinear simulations are now possible due to the availability of modern hybrid computers. Real-time, hybrid computer simulations of the Pratt & Whitney TF30-P-3 and F100-PW-100 augmented turbofans are currently being used to support a number of controls research programs at the Lewis Research Center.

References

1. Szuch, J. R.; and Bruton, W. M.: Real-Time Simulation of the TF30-P-3 Turbofan Engine Using a Hybrid Computer. TM X-3106, Oct. 1974, NASA.

2. Szuch, John R.; and Seldner, Kurt: A Real-Time Simulation of the F100-PW-100 Turbofan Engine Using the Hybrid Computer. TM X-3261, 1975, NASA.

3. Cwynar, D. S.; and Batterton, P. G., "Digital Implementation of the TF30-P-3 Turbofan Engine Control," TM X-3105, Feb. 1975, NASA.

4. Wallhagen, R. E. and Arpasi, D. J., "Self-Teaching Digital Computer Program for Fail-Operational Control of a Turbojet Engine in a Sea-Level Test Stand," TM X-3043, Apr. 1974, NASA.

5. Hrach, Frank J.; Arpasi, Dale J.; and Bruton, William M.: Design and Evaluation of a Sensor Fail-Operational Control System for a Digitally Controlled Turbofan Engine. Proposed NASA Technical Memorandum.

6. Wasserbauer, J. F. and Willoh, R. G., "Experimental and Analytical Investigation of the Dynamic Response of a Supersonic Mixed-Compression Inlet," presented at the 4th Propulsion Joint Specialists Conf., Cleveland, Ohio, 1968.

7. Franklin, J. A. and Koenig, R. W., "A Simulator Investigation of the Influence of Engine Response Characteristics on the Approach and Landing for an Externally Blown-Flap Aircraft. Part I: Description of the Simulation and Discussion of Results," TM X-62265(1), May 1973, NASA.

8. Koenig, R. W. and Fishbach, L. H., "GENENG-Program for Calculating Design Performance for Turbojet and Turbofan Engines." TN D-6552, Feb. 1972, NASA.

9. Fishbach, L. H. and Koenig, R. W., "GENENG II - A Program for Calculating Design and Off-Design Performance of Two- and Three-Spool Turbofans with as Many as Three Nozzles," TN D-6553, Feb. 1972, NASA.

10. Sellers, J. F. and Danielle, C. J., "DYNGEN - A Program for Calculating Steady-State and Transient Performance of Turbojet and Turbofan Engines," TN D-7901, 1975, NASA.

11. Szuch, J. R., "HYDES - A Generalized Hybrid Computer Program for Studying Turbojet or Turbofan Engine Dynamics," TM X-3014, Apr. 1974, NASA.

12. Nye, S. and Vickers, R. J., "Use of Simulation in the Design, Development and Testing of Power Plant Control Systems," presented at 44th AGARD Propulsion and Energetics Panel, Hoyfjellshotell, Ustaoset, Norway, 1974.

13. Arpasi, D. J., Zeller, J. R., and Batterton, P. G., "A General Purpose Digital System for On-Line Control of Airbreathing Propulsion Systems," TM X-2168, Feb. 1971, NASA.

14. Hart, C. E., "Function Generation Subprograms for Use in Digital Simulations," TM X-71526, 1974, NASA.

15. Deiters, R. M. and Nomura, T., "Circle-Test Evaluation of Method of Compensating Hybrid Computing Error by Predicted Integral," SIMULATION, Vol. 8, Jan. 1967, pp. 33-40.

16. Bekey, G. A. and Karplus, W. J., Hybrid Computation, John Wiley & Sons, Inc., New York, 1968, pp. 117-124.

17. Thomson, B., "Basic Transient Effects of Aero Gas Turbines," presented at 44th AGARD Propulsion and Energetics Panel, Hoyfjellshotell, Ustaoset, Norway, 1974.

18. Bentz, C. E. and Zeller, J. R., "Integrated Propulsion Control System Program," SAE Paper 730359, Miami, Fla., Apr. 1973.

19. Kwakernaak, H., and Sivan, R., Linear Optimal Control Systems, Wiley-Interscience, New York, 1972.

E-8416

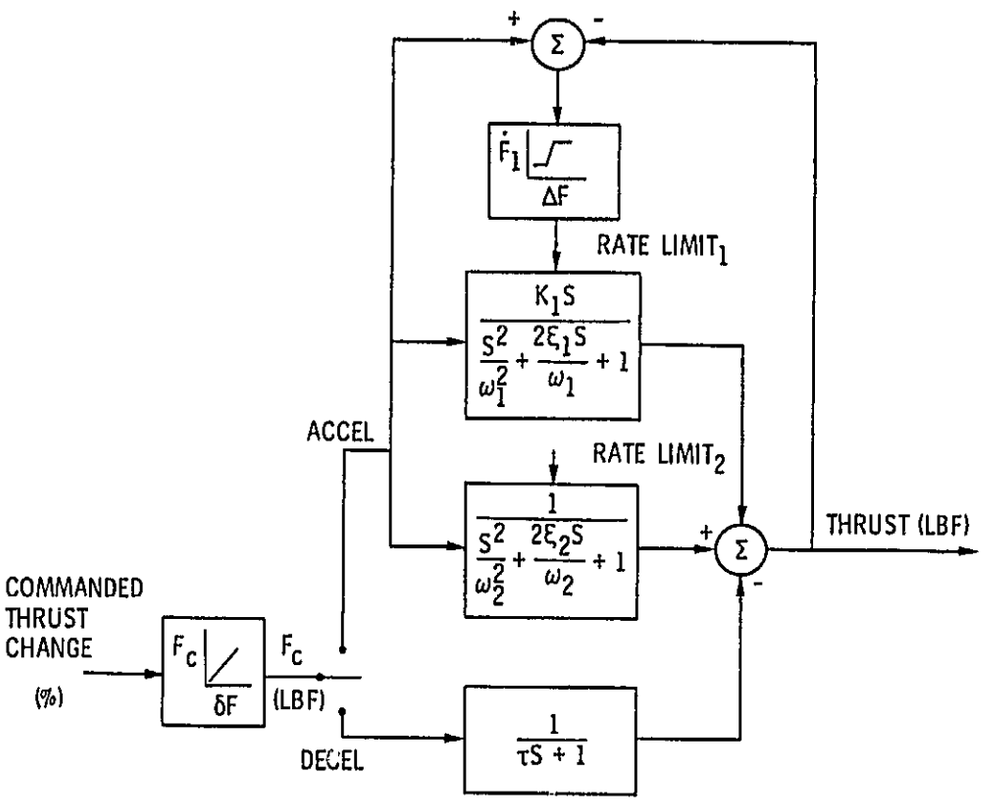

Figure 1. - Transfer function model of a two-spool turbofan engine.

PRECEDING PAGE BLANK NOT FILMED

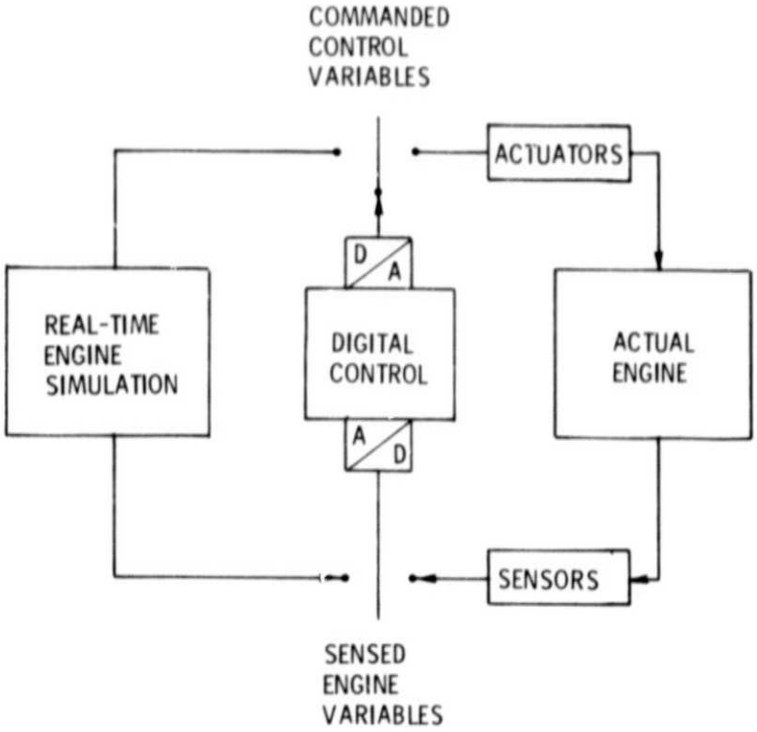

Figure 2. - Digital control evaluation using a real-time engine simulation.

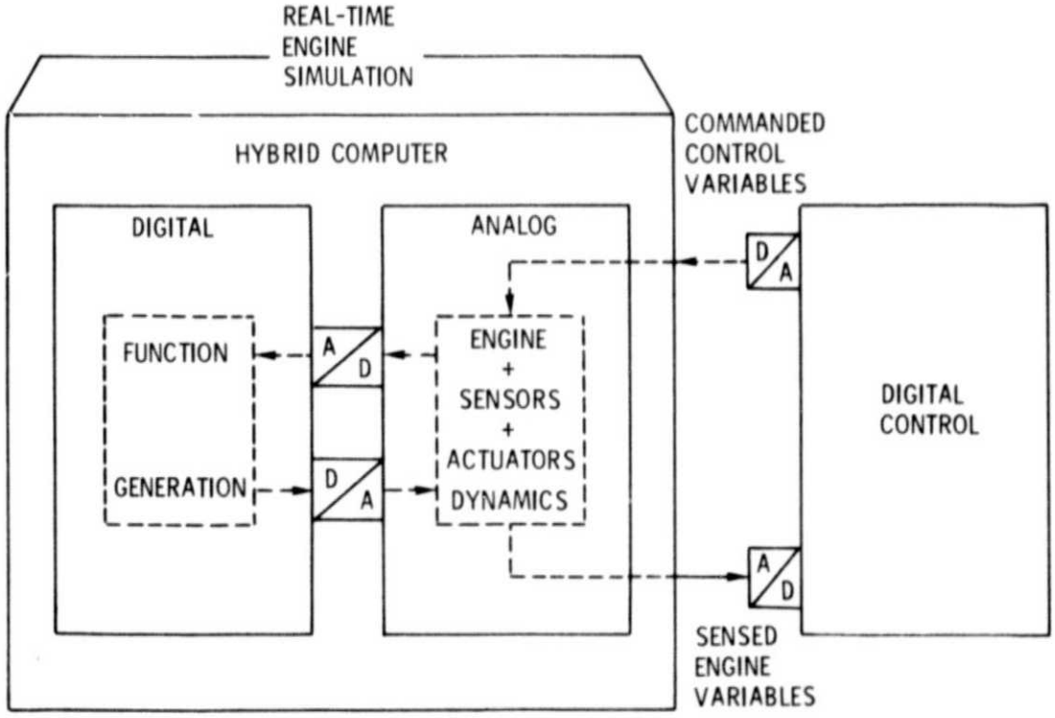

Figure 3. - Real-time engine simulation using a hybrid computer.

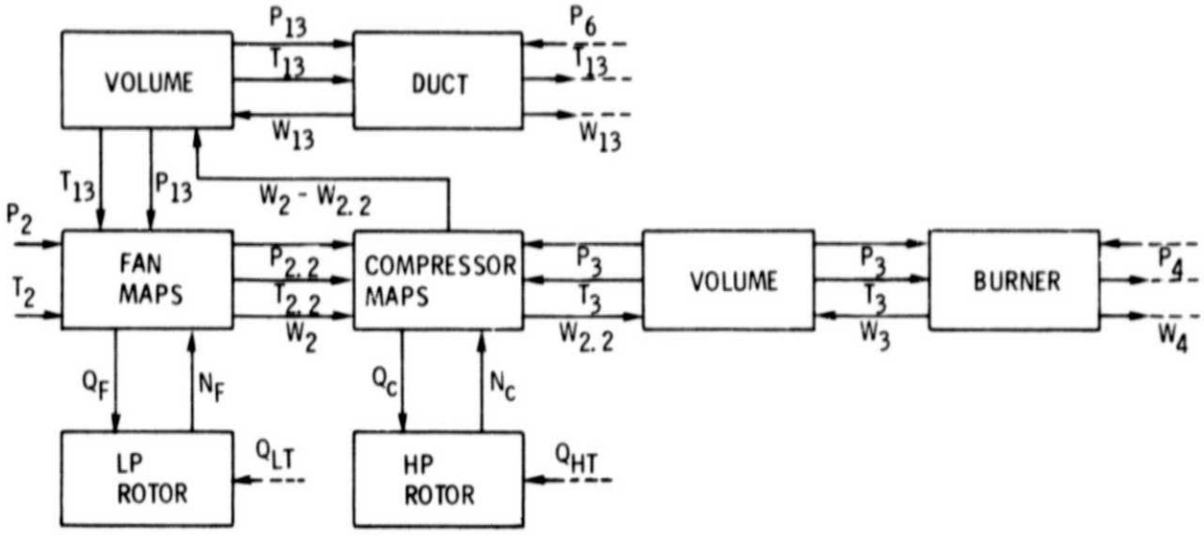

Figure 4. - Block diagram of F100 mathematical model.

E-8416

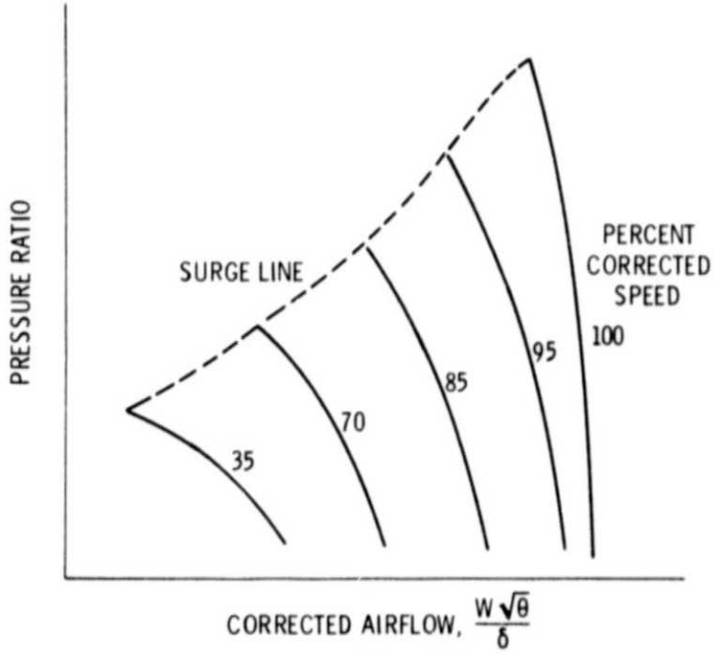

Figure 5. - Typical fan or compressor performance map.

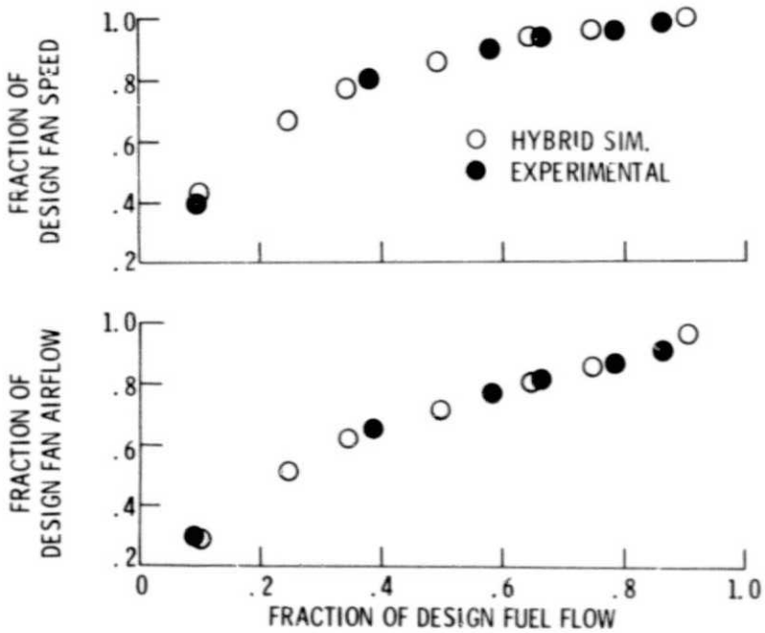

Figure 6. - Steady-state verification of F100 R-T simulation. Sea-level, static, 76° F day.

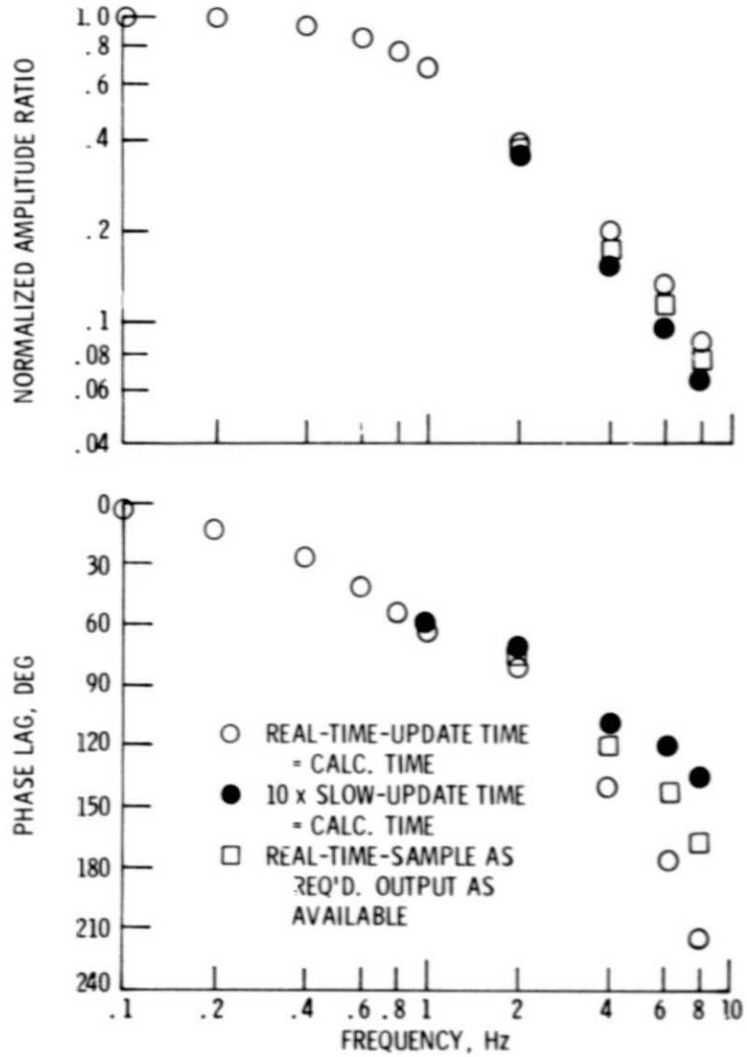

Figure 7. - Effect of digital on simulated response of F100 compressor speed to sinusoidal oscillations in fuel flow.

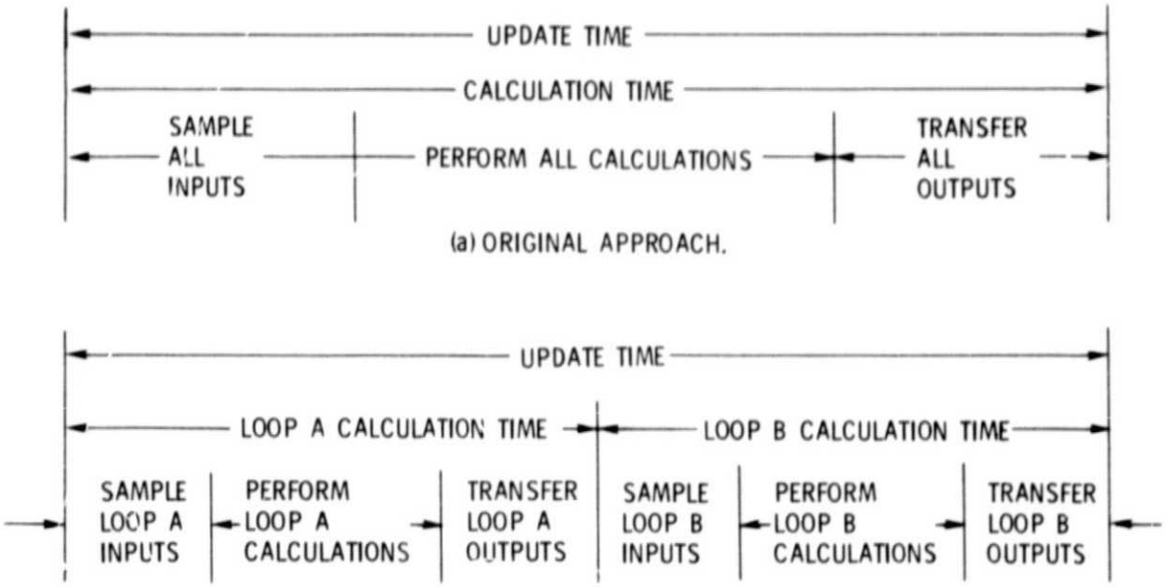

Figure 8. - Approach to minimizing digital effects in hybrid simulations.

E-8416

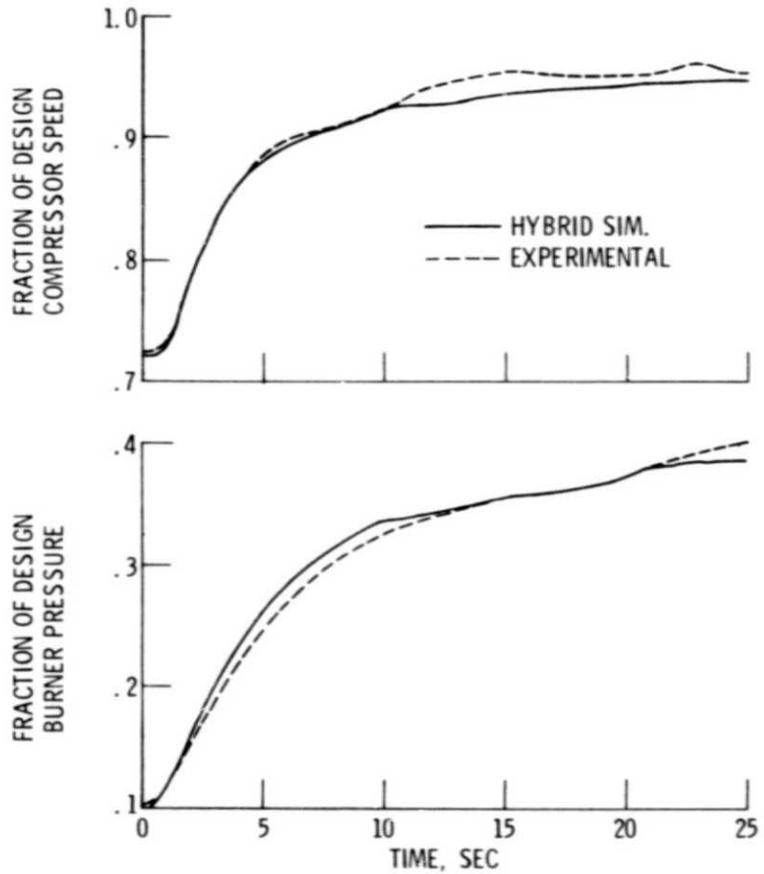

Figure 9. - Transient verification of F100 R-T simulation. Idle-to-intermediate power lever slam. Altitude = 30 000 ft, Mach number = 0.7.

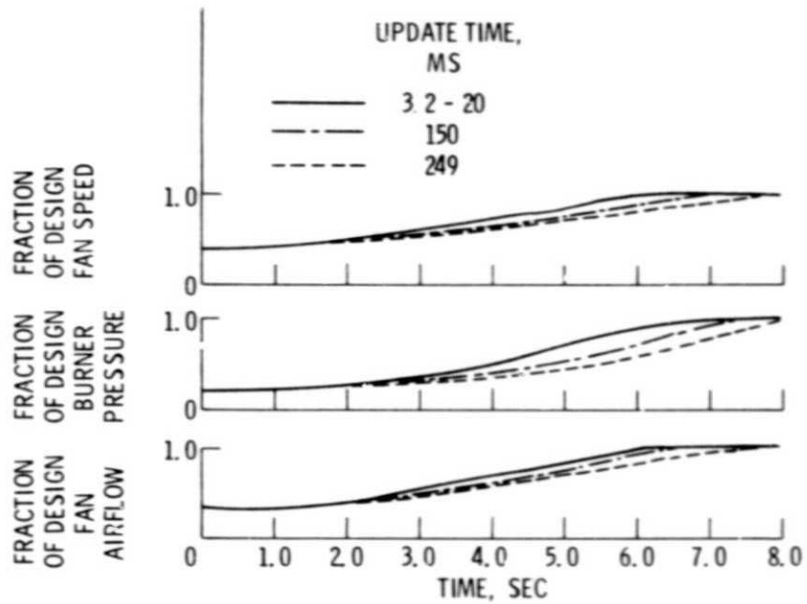

Figure 10. - Effect of digital control update time on simulated response of TF30-P3 to power lever slam from idle to intermediate. Sea-level, static. Calculation time = update time.

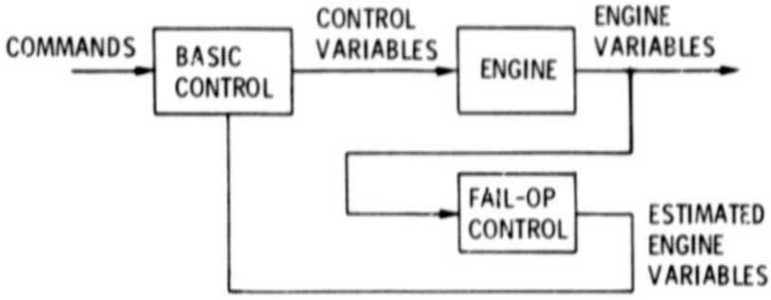

Figure 11. - Sensor fail-operational control.

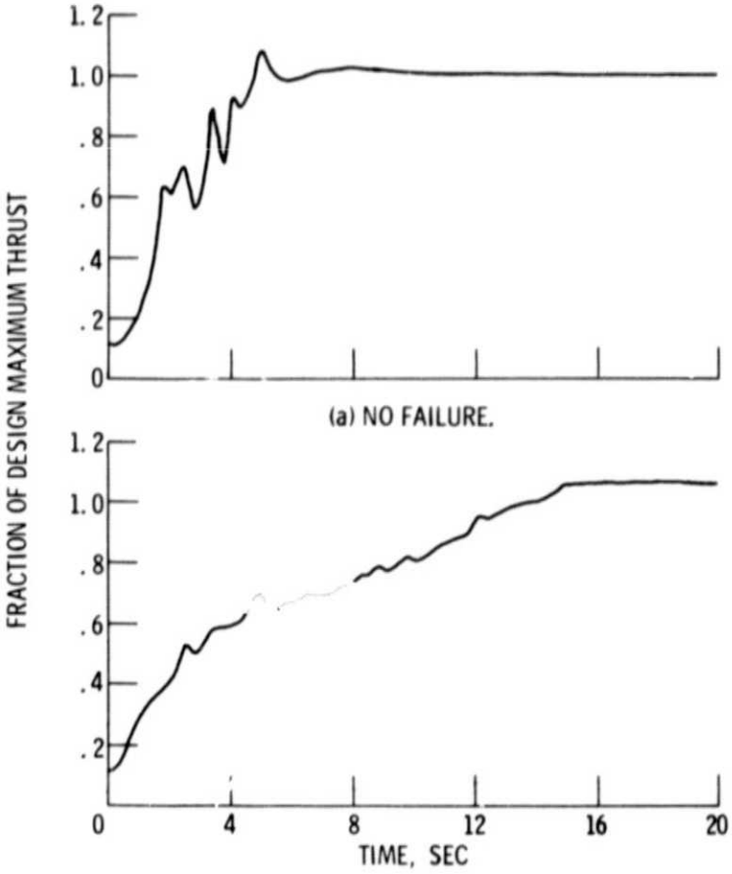

(b) WITH FAILURE.

Figure 12. - Effect of compressor speed sensor failure on simulated response of TF30-P-3 to power lever slam from idle to maximum. Alt. = 10 000 ft, MN = 1.2. Fail-op schedules "learned" at alt. = 30 000 ft, MN = 0.8.

E-8416

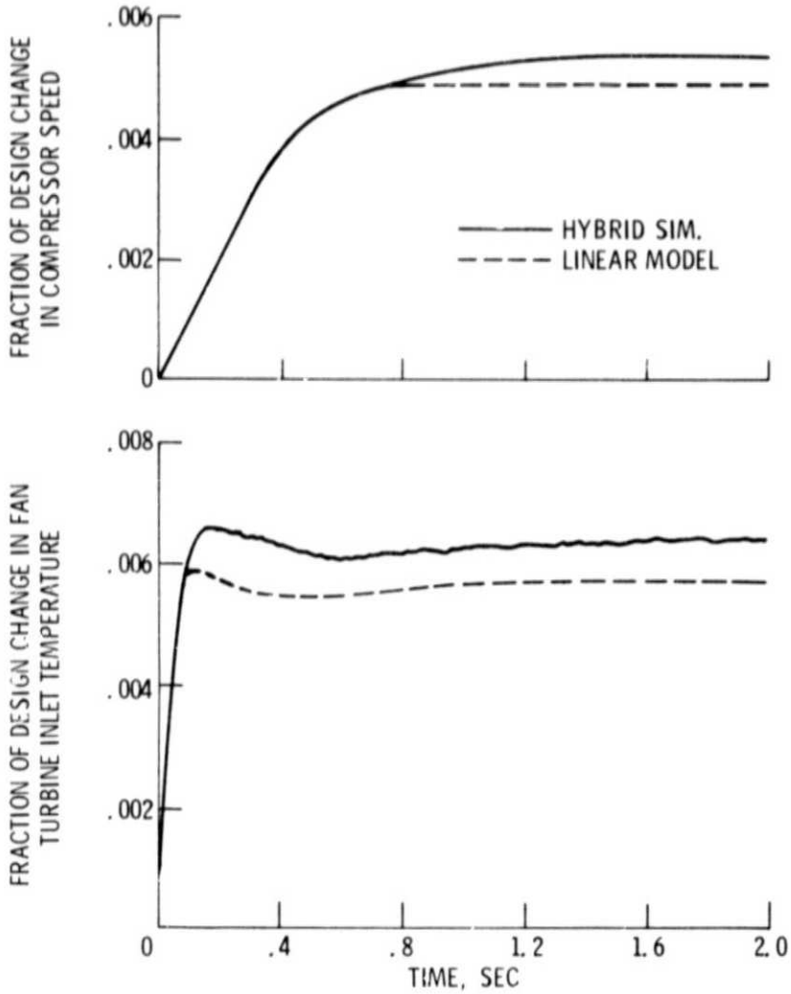

Figure 13. - Verification of F100 linear model at sea-level, static-intermediate power. 2 Percent step increase in fuel flow.