General Disclaimer

One or more of the Following Statements may affect this Document

- This document has been reproduced from the best copy furnished by the organizational source. It is being released in the interest of making available as much information as possible.

- This document may contain data, which exceeds the sheet parameters. It was furnished in this condition by the organizational source and is the best copy available.

- This document may contain tone-on-tone or color graphs, charts and/or pictures, which have been reproduced in black and white.

- This document is paginated as submitted by the original source.

- Portions of this document are not fully legible due to the historical nature of some of the material. However, it is the best reproduction available from the original submission.

Produced by the NASA Center for Aerospace Information (CASI)

NATIONAL AERONAUTICS AND SPACE ADMINISTRATION

NASA CR-
141799

(NASA-CR-141799) RESULTS OF AN EXTERNAL TANK SEPARATION TEST IN THE AEDC/VKF TUNNEL B ON AN 0.010-SCALE REPLICA OF THE SPACE SHUTTLE VEHICLE MODEL 52-OT (IA17A), VOLUME 3 (Chrysler Corp.) 663 p HC $15.25 CSCL 22B G3/18

N75-31204

Unclas
40348

SPACE SHUTTLE

AEROTHERMODYNAMIC DATA REPORT

JOHNSON SPACE CENTER

HOUSTON, TEXAS

DATA MANagement services

SPACE DIVISION CHRYSLER CORPORATION

July, 1975

DMS-DR-2156
NASA CR-141,799

VOLUME 3 OF 3

RESULTS OF AN EXTERNAL TANK SEPARATION TEST IN THE AEDC/VKF TUNNEL B ON AN 0.010-SCALE REPLICA OF THE SPACE SHUTTLE VEHICLE MODEL 52-OT (IA17A)

by

R. H. Spangler and J. J. Daileda
Shuttle Aero Sciences
Rockwell International Space Division

Prepared under NASA Contract Number NAS9-13247

by

Data Management Services
Chrysler Corporation Space Division
New Orleans, La. 70189

for

Engineering Analysis Division

Johnson Space Center
National Aeronautics and Space Administration
Houston, Texas

WIND TUNNEL TEST SPECIFICS:

Test Number:	AEDC Tunnel B VA422
NASA Series Number:	IA17A
Model Number:	52-OT
Test Dates:	6 through 15 March 1974
Occupancy Hours:	37

FACILITY COORDINATOR:

L. L. Trimmer
VKF-SH
ARO, Inc.
Arnold Air Force Station
Tennessee 37389

Phone: (615) 455-2611 x 7377

AERODYNAMICS ANALYSIS ENGINEER:

P. R. Pearson
Rockwell International
Space Division
12214 Lakewood Blvd.
Mail Code AC07
Downey, California 90241

Phone: (213) 922-4831

PROJECT ENGINEERS:

R. H. Spangler & J. J. Daileda
Rockwell International
Space Division
12214 Lakewood Blvd.
Mail Code AC07
Downey, California 90241

Phone: (213) 922-4185

J. H. Jones
AEDC-VKFADP
ARO, Inc.
Arnold Air Force Station
Tennessee 37389

Phone: (615) 455-2611 x594

DATA MANAGEMENT SERVICES:

Prepared by: Liaison--D. A. Sarver
Operations--J. T. Daviet

Reviewed by: D. E. Poucher, J. L. Glynn

Approved: N. D. Kemp, Manager
Data Management Services

Concurrence: J. G. Swider, Manager
Flight Technology Branch

Chrysler Corporation Space Division assumes no responsibility for the data presented other than display characteristics.

RESULTS OF AN EXTERNAL TANK SEPARATION TEST IN THE AEDC/VKF TUNNEL B ON AN 0.010-SCALE REPLICA OF THE SPACE SHUTTLE VEHICLE MODEL 52-OT (IA17A)

by

R. H. Spangler and J. J. Daileda, Rockwell International Space Division

ABSTRACT

Tests were conducted in the AEDC/VKF Tunnel B on an 0.010-scale model of the Space Shuttle Orbiter and External Tank to determine the aerodynamic interactions during a "Return to Launch Site" (RTLS) abort separation. The Orbiter model was built to vehicle 3 configuration lines (139B) and the ET model approximated the vehicle 5 configurations with protuberances and attach hardware.

For these investigations the Orbiter was mounted on the primary support system and the external tank was mounted on the Captive Trajectory System. Six-component data were obtained for each vehicle at various Orbiter angles of attack and sideslip for a range of relative angular and linear displacements of the ET from the Orbiter.

TABLE OF CONTENTS

	Page
ABSTRACT	iii
INDEX OF MODEL FIGURES	2
INDEX OF DATA FIGURES	3
INTRODUCTION	8
NOMENCLATURE	9
REMARKS	13
CONFIGURATIONS INVESTIGATED	14
TEST FACILITY DESCRIPTION	15
TEST PROCEDURE	16
DATA REDUCTION	17
TABLES	
I. TEST CONDITIONS	18
II. DATASET/RUN NUMBER COLLATION SUMMARY	19
III. MODEL DIMENSIONAL DATA	44
FIGURES	
MODEL	65
DATA	75
(VOL. 1 - FIGURES 4-22) (VOL. 2 - FIGURES 23-51)	
APPENDIX	75
TABULATED SOURCE DATA (VOLUME 3)	

PRECEDING PAGE BLANK NOT FILMED

INDEX OF MODEL FIGURES

Figure		Title	Page
1.		Axis systems.	
	a.	General	65
	b.	Tank Separation From Orbiter	66
2.		Model sketches.	
	a.	Orbiter/Tank Mated Configuration	67
	b.	Orbiter Configuration	68
	c.	External Tank Configuration	69
	d.	External Tank Protuberences	70
3.		Model photographs.	
	a.	Mated Position	71
	b.	Near Separation Position	72
	c.	Median Separation Position	73
	d.	Large Separation Position	74

INDEX OF DATA FIGURES

FIGURE	TITLE	CONDITIONS VARYING	PLOTTED COEFFICIENT SCHEDULE	PAGES
VOLUME I				
FIG. 4	ORBITER AERO CHARACTERISTICS (DELTA-Y = 0, MACH = 5.93, ELEVON = 0)	DLT-X,DLTALF,GRID, BETA, ALPHA	A	1-98
FIG. 5	ORBITER AERO CHARACTERISTICS (DELTA-Y = 0, MACH = 5.93, ELEVON = 15)		A	99-126
FIG. 6	ORBITER AERO CHARACTERISTICS (DELTA-Y = 0, MACH = 5.93, ELEVON = -20)		A	127-154
FIG. 7	ORBITER AERO CHARACTERISTICS (DELTA-Y = 0, MACH = 5.93, ELEVON = -40)		A	155-182
FIG. 8	ORBITER AERO CHARACTERISTICS (DELTA-Y = 0, MACH = 5.93, AILERON = 15)		A	183-210
FIG. 9	ORBITER AERO CHARACTERISTICS (DELTA-Y = 0, MACH = 7.98, ELEVON = 0)	DLT-X,DLTALF,GRID BETA,PO,ALPHA	A	211-284
FIG. 10	ORBITER AERO CHARACTERISTICS (DELTA-Y = 0, MACH = 7.98, ELEVON = -20)	DLTALF,GRID,ALPHA	A	285-296
FIG. 11	ORBITER AERO CHARACTERISTICS (DELTA-Y = 0, MACH = 7.98, ELEVON = -40)	DLTALF,GRID,ALPHA	A	297-308
FIG. 12	ORBITER AERO CHARACTERISTICS (DELTA-Y = 0, MACH = 7.98, AILERON = 15)	DLTALF,GRID,ALPHA	A	309-320
FIG. 13	ORBITER AERO CHARACTERISTICS (DELTA-Y = 60, MACH = 5.93, ELEVON = 0)	DLT-X,DLTALF,GRID, DLTBTA,BETA,ALPHA	A	321-428
FIG. 14	ORBITER AERO CHARACTERISTICS (DELTA-Y = 60, MACH = 5.93, ELEVON = 15)	DLT-X, DLTALF,GRID, BETA, ALPHA	A	429-456

INDEX OF DATA FIGURES (Continued)

FIGURE	TITLE	CONDITIONS VARYING	PLOTTED COEFFICIENT SCHEDULE	PAGES
FIG. 15	ORBITER AERO CHARACTERISTICS (DELTA-Y = 60, MACH = 5.93, ELEVON = -20)	DLT-X,DLTALF,GRID, BETA, ALPHA	A	457-484
FIG. 16	ORBITER AERO CHARACTERISTICS (DELTA-Y = 60, MACH = 5.93, ELEVON = -40)	DLT-X,DLTALF,GRID, BETA, ALPHA	A	485-504
FIG. 17	ORBITER AERO CHARACTERISTICS (DELTA-Y = 60, MACH = 5.93, AILERON = 15)	DLT-X,DLTALF,GRID, BETA, ALPHA	A	505-532
FIG. 18	ORBITER AERO CHARACTERISTICS (DELTA-Y = 60, MACH = 7.98, ELEVON = 0)	DLT-X,DLTALF,DLTBTA, BETA,GRID,ALPHA,PO	A	533-610
FIG. 19	ORBITER AERO CHARACTERISTICS (DELTA-Y = 60, MACH = 7.98, ELV = 0, LOWER PO)	DLT-X, DLTALF	A	611-614
FIG. 20	ORBITER AERO CHARACTERISTICS (DELTA-Y = 200, MACH = 5.93, ELEVON = 0)	DLT-X,DLTALF,GRID, BETA, ALPHA	A	615-668
FIG. 21	ORBITER AERO CHARACTERISTICS (DELTA-Y = -60, MACH = 5.93, ELEVON = 0)	DLT-X, DLTALF	A	669-674
FIG. 22	ORBITER AERO CHARACTERISTICS (DELTA-X = 0, MACH = 5.93, ELEVON = 0)	DLT-Z, DLTBTA	B	675-680
VOLUME 2				
FIG. 23	EXTERNAL TANK AERO CHARACTERISTICS (DELTA-Y = 0, MACH = 5.93, ELEVON = 0)	DLT-X,DLTALF,GRID, BETA, ALPHA	A	681-778
FIG. 24	EXTERNAL TANK AERO CHARACTERISTICS (DELTA-Y = 0, MACH = 5.93, ELEVON = 15)	DLT-X,DLTALF,GRID, BETA, ALPHA	A	779-806
FIG. 25	EXTERNAL TANK AERO CHARACTERISTICS DELTA-Y = 0, MACH = 5.93, ELEVON = -20)	DLT-X,DLTALF,GRID, BETA, ALPHA	A	807-834

INDEX OF DATA FIGURES (Continued)

FIGURE	TITLE	CONDITIONS VARYING	PLOTTED COEFFICIENT SCHEDULE	PAGES
FIG. 26	EXTERNAL TANK AERO CHARACTERISTICS (DELTA-Y = 0, MACH = 5.93, ELEVON = -40)	DLT-X,DLTALF,GRID, BETA, ALPHA	A	835-862
FIG. 27	EXTERNAL TANK AERO CHARACTERISTICS (DELTA-Y = 0, MACH = 5.93, AILERON = 15)	DLT-X,DLTALF,GRID, BETA, ALPHA	A	863-890
FIG. 28	EXTERNAL TANK AERO CHARACTERISTICS (DELTA-Y =0, MACH = 7.98, ELEVON = 0)	DLT-X,DLTALF,GRID, BETA, PO, ALPHA	A	891-964
FIG. 29	EXTERNAL TANK AERO CHARACTERISTICS (DELTA-Y = 0, MACH = 7.98, ELEVON = -20)	DLTALF,GRID,ALPHA	A	965-976
FIG. 30	EXTERNAL TANK AERO CHARACTERISTICS (DELTA-Y = 0, MACH = 7.98, ELEVON = -40)	DLTALF,GRID,ALPHA	A	977-988
FIG. 31	EXTERNAL TANK AERO CHARACTERISTICS (DELTA-Y = 0, MACH = 7.98, AILERON = 15)	DLTALF,GRID,ALPHA	A	989-1000
FIG. 32	EXTERNAL TANK AERO CHARACTERISTICS (DELTA-Y = 60, MACH = 5.93, ELEVON = 0)	DLT-X,DLTALF,GRID, DLTBTA,BETA,ALPHA	A	1001-1108
FIG. 33	EXTERNAL TANK AERO CHARACTERISTICS (DELTA-Y = 60, MACH = 5.93, ELEVON = 15)	DLT-X,DLTALF,GRID BETA, ALPHA	A	1109-1136
FIG. 34	EXTERNAL TANK AERO CHARACTERISTICS (DELTA-Y = 60, MACH = 5.93, ELEVON = -20)	DLT-X,DLTALF,GRID, BETA, ALPHA	A	1137-1164
FIG. 35	EXTERNAL TANK AERO CHARACTERISTICS (DELTA-Y = 60, MACH = 5.93, ELEVON = -40)	DLT-X,DLTALF,GRID, BETA, ALPHA	A	1165-1184
FIG. 36	EXTERNAL TANK AERO CHARACTERISTICS (DELTA-Y = 60, MACH = 5.93, AILERON = 15)	DLT-X,DLTALF,GRID, BETA, ALPHA	A	1185-1212

INDEX OF DATA FIGURES (Continued)

FIGURE	TITLE	CONDITIONS VARYING	PLOTTED COEFFICIENT SCHEDULE	PAGES
FIG. 37	EXTERNAL TANK AERO CHARACTERISTICS (DELTA-Y = 60, MACH = 7.98, ELEVON = 0)	DLT-X,DLTALF,DLTBTA, BETA,GRID,ALPHA,PO	A	1213-1290
FIG. 38	EXTERNAL TANK AERO CHARACTERISTICS (DELTA-Y = 60, MACH = 7.98, ELV = 0, LWR PO)	DLT-X, DLTALF	A	1291-1294
FIG. 39	EXTERNAL TANK AERO CHARACTERISTICS (DELTA-Y = 200, MACH = 5.93, ELEVON = 0)	DLT-X, DLTALF,GRID BETA, ALPHA	A	1295-1348
FIG. 40	EXTERNAL TANK AERO CHARACTERISTICS (DELTA-Y = -60, MACH = 5.93, ELEVON = 0)	DLT-X, DLTALF	A	1349-1354
FIG. 41	EXTERNAL TANK AERO CHARACTERISTICS (DELTA-X = 0, MACH = 5.93, ELEVON = 0)	DLT-Z, DLTBTA	B	1355-1360
FIG. 42	EXTERNAL TANK ALONE AERO CHARACTERISTICS AT MACH = 5.93	BETA	C	1361-1362
FIG. 43	EXTERNAL TANK ALONE AERO CHARACTERISTICS AT MACH 7.98	BETA	C	1363-1364
FIG. 44	EFFECT OF ELEVON ON ORBITER CHARACT. (MACH = 5.93, ALPHA = 0, BETA = 3)	ELEVON, DLTALF	A	1365-1370
FIG. 45	EFFECT OF ELEVON ON ORBITER CHARACT. (MACH = 7.98, ALPHA = 0, BETA = 0)	ELEVON, AILRON, DLTALF	A	1371-1376
FIG. 46	EFFECT OF ELEVON ON ORBITER CHARACT. (MACH = 7.98, ALPHA = -5, BETA = 0)	ELEVON, AILRON, DLTALF	A	1377-1382
FIG. 47	EFFECT OF ELEVON ON ORBITER CHARACT. (MACH = 5.93, DLT-Y = 60, DLTBTA = 3)	ELEVON, AILRON, DLTALF	A	1383-1388

INDEX OF DATA FIGURES (Concluded)

FIGURE	TITLE	CONDITIONS VARYING	PLOTTED COEFFICIENT SCHEDULE	PAGES
FIG. 48	EFFECT OF ELEVON ON ET CHARACT. (MACH = 5.93, ALPHA = 0, BETA = 3)	ELEVON, DLTALF	A	1389-1394
FIG. 49	EFFECT OF ELEVON ON ET CHARACT. (MACH = 7.98, ALPHA = 0, BETA = 0)	ELEVON, AILRON, DLTALF	A	1395-1400
FIG. 50	EFFECT OF ELEVON ON ET CHARACT. (MACH = 7.98, ALPHA = -5, BETA = 0)	ELEVON, AILRON, DLTALF	A	1401-1406
FIG. 51	EFFECT OF ELEVON ON ET CHARACT. (MACH = 5.93, DLT-Y = 60, DLTBTA = 3)	ELEVON, AILRON, DLTALF	A	1407-1412

PLOTTED COEFFICIENT SCHEDULE:

(A) CN, CLM, CA, CY, CYN, CBL versus DLT-Z

(B) CN, CLM, CA, CY, CYN, CBL versus DLT-Y

(C) CN, CLM, CA, CY, CYN, CBL versus ALPHA

INTRODUCTION

An external tank separation test, IA17A, was conducted at Mach numbers of 6 and 8. The test was conducted during the period from March 6, 1974 through March 15, 1974. Data were obtained to define the aerodynamic interference between the two bodies over a grid of five variables (α, β, x, y, z) for various initial conditions of the combined vehicles. Six component aerodynamic characteristics were obtained for both bodies. The effects of the interference on elevon effectiveness (elevator and aileron) were also investigated. All objectives of the test were met.

This report for IA17A consists of three volumes. Two volumes consist of data figures while the third has the tabulated source data. Volume one contains Figure 4 through Figure 22 of the data figures and volume two has Figure 23 through Figure 51.

NOMENCLATURE
General

SYMBOL	PLOT SYMBOL	DEFINITION
a		speed of sound; m/sec, ft/sec
C_p	CP	pressure coefficient; $(p_l - p_\infty)/q$
M	MACH	Mach number; V/a
p		pressure; N/m^2, psf
q	Q(NSM) Q(PSF)	dynamic pressure; $1/2\rho V^2$, N/m^2, psf
RN/L	RN/L	unit Reynolds number; per m, per ft
V		velocity; m/sec, ft/sec
α	ALPHA	angle of attack, degrees
β	BETA	angle of sideslip, degrees
ψ	PSI	angle of yaw, degrees
ϕ	PHI	angle of roll, degrees
ρ		mass density; kg/m^3, $slugs/ft^3$
		Reference & C.G. Definitions
Ab		base area; m^2, ft^2
b	BREF	wing span or reference span; m, ft
c.g.		center of gravity
ℓ_{REF} $\bar{c}$	LREF	reference length or wing mean aerodynamic chord; m, ft
S	SREF	wing area or reference area; m^2, ft^2
	MRP	moment reference point
	XMRP	moment reference point on X axis
	YMRP	moment reference point on Y axis
	ZMRP	moment reference point on Z axis

SUBSCRIPTS

b	base
l	local
s	static conditions
t	total conditions
∞	free stream

NOMENCLATURE (Continued)

Body-Axis System

SYMBOL	PLOT SYMBOL	DEFINITION
C_N	CN	normal-force coefficient; $\frac{\text{normal force}}{qS}$
C_A	CA	axial-force coefficient; $\frac{\text{axial force}}{qS}$
C_Y	CY	side-force coefficient; $\frac{\text{side force}}{qS}$
C_{A_b}	CAB	base-force coefficient; $\frac{\text{base force}}{qS}$ $-A_b(p_b - p_\infty)/qS$
C_{A_f}	CAF	forebody axial force coefficient, $C_A - C_{A_b}$
C_m	CLM	pitching-moment coefficient; $\frac{\text{pitching moment}}{qS\ell_{REF}}$
C_n	CYN	yawing-moment coefficient; $\frac{\text{yawing moment}}{qSb}$
C_ℓ	CBL	rolling-moment coefficient; $\frac{\text{rolling moment}}{qSb}$
		Stability-Axis System
C_L	CL	lift coefficient; $\frac{\text{lift}}{qS}$
C_D	CD	drag coefficient; $\frac{\text{drag}}{qS}$
C_{D_b}	CDB	base-drag coefficient; $\frac{\text{base drag}}{qS}$
C_{D_f}	CDF	forebody drag coefficient; $C_D - C_{D_b}$
C_Y	CY	side-force coefficient; $\frac{\text{side force}}{qS}$
C_m	CLM	pitching-moment coefficient; $\frac{\text{pitching moment}}{qS\ell_{REF}}$
C_n	CLN	yawing-moment coefficient; $\frac{\text{yawing moment}}{qSb}$
C_ℓ	CSL	rolling-moment coefficient; $\frac{\text{rolling moment}}{qSb}$
L/D	L/D	lift-to-drag ratio; C_L/C_D
L/D_f	L/DF	lift to forebody drag ratio; C_L/C_{D_f}

ORIGINAL PAGE IS
OF POOR QUALITY

NOMENCLATURE (Continued)
Additions to Standard Nomenclature

Symbol	Plot Symbol	Description
$C_{P_{B1}}$		station no. 1 Orbiter base pressure coefficient, left side
$C_{P_{B2}}$		station no. 2 Orbiter base pressure coefficient, right side
$C_{P_{BC}}$		balance cavity pressure coefficient
ET		external tank
P_o	PO	freestream static pressure, psia
MRC		moment reference center
RTLS		return to launch site
V_∞		freestream velocity, fps
X_{cp}/ℓ	XCP/L	longitudinal center of pressure, fraction of body length
X_o		Orbiter longitudinal station, in
X_T		external tank longitudinal station, in
Y_o		Orbiter lateral station, in
Y_T		external tank lateral station, in
Z_o		Orbiter vertical station, in
Z_T		external tank vertical station, in.
α_o		Orbiter angle of attack, deg
α_T		external tank angle of attack, deg

NOMENCLATURE (Concluded)

Symbol	Plot Symbol	Definition
β_O		Orbiter angle of sideslip, deg
β_T		external tank angle of sideslip, deg
$\Delta\alpha$	DLTALF	incremental angle of attack between Orbiter and external tank, deg
$\Delta\beta$	DLTBTA	incremental angle of sideslip between Orbiter and external tank, deg
ΔX	DLT-X	horizontal distance between external tank nose mated position and instantaneous position during separation, in.
ΔY	DLT-Y	lateral distance between external tank nose mated position and instantaneous position during separation, in
ΔZ	DLT-Z	vertical distance between external tank nose mated position and instantaneous position during separation, in
δ_e	ELEVON	elevon deflection angle, deg
δ_a	AILRON	aileron deflection angle, deg
GRID	GRID	matrix of linear and angular displacements used by the Captive Trajectory System computer to position the model at the required separation distances and angles

REMARKS

During the course of test preparation and running, various events occurred having a possible effect on the test results. These items are noted below.

1) AEDC was unable to satisfactorily tube for ET base pressure measurement due to the lack of provisions for these measurements in the CTS.

2) A leak was discovered to exist in the reference pressure tubing for the transducer measuring the ET chamber pressure. This affects all ET chamber pressure data after group 110.

3) During the running of group 455 the Orbiter balance (-050) was damaged due to a CTS failure. All subsequent data were obtained using a similar but different balance (-048). Since no comparison runs were made between the two balances, the affect on the data cannot be determined.

CONFIGURATIONS INVESTIGATED

Model 52-O is an 0.010-scale representation of the Space Shuttle Configuration 3 Orbiter, built to the lines depicted in Rockwell Dwg. VL70-000139B. It is of all steel construction to withstand the enviroment of hypersonic tunnels. Adjustable control surfaces are provided by means of interchangeable brackets.

For this test the Orbiter model was mounted on the primary support system by means of the AEDC/VKF 4.00-Y-36-050 balance and 4.06 -Z-21-047 sting. (After data group 454 the -050 balance was replaced with the -048 balance when the -050 balance was damaged). The primary support system was modified to reduce blockage, resulting in manual, rather than remote changes of angle of attack and sideslip.

The balances were water cooled. Since the flexible tubing used to carry the cooling water to the cooling jacket was larger than anticipated the aft end of the Orbiter model was milled out for clearance, including the main propulsion engines.

The 52-T model is an 0.010-scale representation of the Vehicle 5 External Tank with protrusions and attach fittings as shown on Rockwell Dwg. VL78-000062. The tank model is also of all steel construction. It was mounted on the Captive Trajectory System by means of the AEDC/VKF 4.00-Y-36-049 balance and the Rockwell built VY 109575 sting. The following configuration notation was used:

$$O_1 = B_{19}\ C_7\ E_{23}\ F_5\ M_4\ N_8\ N_{24}\ R_5\ V_7\ W_{107}$$

$$ET_1 = T_{20}\ AT_{16}\ AT_{17}\ AT_{18}\ AT_{20}\ PT_9\ PT_{10}\ PT_{11}\ PT_{12}\ FL_3\ FL_4$$

TEST FACILITY DESCRIPTION

The Arnold Engineering Development Center (AEDC) is an Air Force Facility located in Tullahoma, Tennessee. Tunnel B is a continuous, closed circuit, variable density wind tunnel with an axisymmetric contoured nozzle and a 50-inch diameter test section. The tunnel can be operated at a nominal Mach number of 6 or 8 at stagnation pressures from 20 to 300 and 50 to 900 psia, respectively, and at a stagnation temperature of up to 1350°R. The model may be injected into the tunnel for a test run and then retracted for model cooling or model changes without interrupting the tunnel flow.

TEST PROCEDURE

The test was conducted to obtain data for use in a separation trajectory computer program. The test program was, therefore, designed to produce data for a grid of linear and angular displacements of the ET relative to the Orbiter, for various initial conditions of the combined vehicles. In general ΔZ (vertical distance of the ET nose from its mated position) was the basic variable, a basic group consisting of a series of ΔZ values at a single value combination of the other variables.

The initial relative positions of the Orbiter and external tank were established prior to testing by physical measurements. The linear and angular movement of the ET on the CTS was controlled by the CTS computer which compensated for balance and sting deflections.

DATA REDUCTION

Data were reduced about body and stability axes systems using the following reference dimensions:

Orbiter data:

reference area	2690.0 ft.^{2}
reference M.A.C.	1290.3 in.
reference span	1290.3 in.
moment reference point	
	X_o = 1089.6 in.
	Y_o = 0.0 in.
	Z_o = 375.0 in.

Tank data:

reference area	2690.0 ft.^{2}
reference M.A.C.	1290.3 in.
reference span	1290.3 in.
moment reference point	
	X_T = 1360.1 in.
	Y_T = 0.0 in.
	Z_T = 416.4 in.

MRP locations are also shown in figures 2a and b. Orbiter-tank separation distances are as defined in figure 1b.

TABLE I.

TEST : IA17A			DATE : 3/15/74
TEST CONDITIONS			
MACH NUMBER	REYNOLDS NUMBER (per ft)	DYNAMIC PRESSURE (pounds/sq. inch)	STAGNATION TEMPERATURE (degrees Fahrenheit)
5.93	1.973×10^6	1.575	335
7.98	1.921	1.947	805
7.98	1.753	1.708	812
7.98	1.669	1.626	812
7.98	1.431	1.392	832

Orbiter (Groups 1-454), Balance 4.00-Y-36-050

Balance Component	Design Load	Range of Static Loads	Measurement Uncertainty
Normal force, lb	200	± 50	±0.5
Side force, lb	100	± 25	±0.1
Axial force, lb	50	10	±0.1
Pitching moment, in.-lb	680	±100	±0.8
Yawing moment, in-lb	300	± 50	±0.3
Rolling moment, in-lb	100	± 10	±0.05

Orbiter (Groups 455-997), Balance No. 4.00-Y-36-048

Balance Component	Design Load	Range of Static Loads	Measurement Uncertainty
Normal force, lb	300	± 50	± 0.3
Side force, lb	100	± 25	± 0.15
Axial force, lb	50	10	± 0.1
Pitching moment, in-lb	1020	±100	± 0.6
Yawing moment, in-lb	340	± 50	± 0.4
Rolling moment, in-lb	100	± 10	± 0.04

External Tank, Balance No. 4.00-Y-36-049

Balance Component	Design Load	Range of Static Loads	Measurement Uncertainty
Normal force, lb	200	±50	±0.3
Side force, lb	200	±25	±0.2
Axial force, lb	100	10	±0.1
Pitching moment, in-lb	680	±100	±0.5
Yawing moment, in-lb	680	± 50	±0.3
Rolling moment, in-lb	100	± 20	±0.07

Loads and Uncertainties with respect to Balance Center

TABLE II.

TEST: AEDC VA422 (IA17A)

DATA SET/RUN NUMBER COLLATION SUMMARY

DATE: 3/15/74

DATA SET IDENTIFIER	CONFIGURATION	SCHD. ΔY	SCHD. ΔZ	α_o	β_o	$\Delta\alpha$	$\Delta\beta$	M	δ_a	δ_e			GRID	NO. OF RUNS	ΔX, in. full scale 0	200	400	
*RTR001	$O_1 + ET_1$	0	A	0	0	0	0	5.93	0	0			1		56	57	58	
02			B			-5									62	63		
03			C			-10									64	65	66	
04			D			-15									70	71	72	
05			E			-20									73	74	75	
06			K			-20							26		380			
07			J			-20							26		381	372	373	
08			A		3	0							3		149	112		
09			G			-5									115	116		
10			H			-10									117	118	119	
11			I			-15									123	124	125	
12			A			0									111			
13			J			0									130	126	127	
14			A	5	0	0							5		199	200	201	
15			G			-5									205	206		
16			H			-10									207	208	209	
17			I			-15									213	214	215	
19			J		3	-20									220	216	217	

TEST RUN NUMBERS

1	7	13	19	25	31	37	43	49	55	61	67	75 76
CM	CA	CLM	CY	CYN	CBL	XCP/L	CPB1	CPB2	CPBC	IDLT-X	IDLT-Z	
										IDVAR (1)	IDVAR (2)	NDV

COEFFICENTS

α OR β SCHEDULES

A(ΔZ) = 20, 100, 2.00, 300, 400, 500, 600

B(ΔZ) = 200, 300, 400, 500, 600, 800

C(ΔZ) = 400, 500, 600, 800

D(ΔZ) = 500, 600, 800

*FOR ALL CONFIGURATIONS: RTRXXX REFERS TO O_1 BALANCE DATA
ATRXXX REFERS TO ET_1 BALANCE DATA

TABLE II. (Continued)

TEST: AEDC VA422 (IA17A) — DATA SET/RUN NUMBER COLLATION SUMMARY — DATE: 3/15/74

DATA SET IDENTIFIER	CONFIGURATION	SCHD. ΔY	SCHD. ΔZ	α_o	β_o	$\Delta\alpha$	$\Delta\beta$	M	δ_o	δ_e	GRID	NO. OF RUNS	ΔX, in. full scale 0	200	400
RTR020	$O_1 + ET_1$	0	A	5	3	0	0	5.93	0	0	4		161	162	
21			G			-5							165	166	
22			H			-10							167	168	169
23			I			-15							173	174	175
25			J			-20							180	176	177
26			A	-5	0	0					6		239	240	241
27			L			-5							245	246	
28			H			-10							247	248	249
29			I			-15							253	254	255
31			J			-20							260	256	257
32			A		3	0					7		279	280	
33			L			-5							283	284	
34			H			-10							285	286	287
35			I			-15							291	292	293
37			J			-20							298	294	295
38			M	-10		0					8		318	319	
39			L			-5							322	323	
40			N			-10							324	325	326

TEST RUN NUMBER

1 13 19 25 31 37 43 49 55 61 67 75 76

COEFFICENTS — IDVAR (1) IDVAR (2) NDV

α OR β SCHEDULES

$E(\Delta Z) = 800, 1000$

$G(\Delta Z) = 200, 300, 400, 500, 600, 750, 800$

$H(\Delta Z) = 400, [illegible], 600, 750, 800$

$I(\Delta Z) = 50[illegible], [illegible]00, 750, 800$

TABLE II. (Continued)

TEST: AEDC VA422 (IA17A) — DATA SET/RUN NUMBER COLLATION SUMMARY — DATE: 3/15/74

DATA SET IDENTIFIER	CONFIGURATION	SCHD. ΔY	SCHD. ΔZ	α_o	β_o	$\Delta\alpha$	$\Delta\beta$	M	δ_a	δ_e			GRID	NO. OF RUNS	ΔX, in. full scale 0	200	400	
RTR041	$O_1 + ET_1$	0	P	-10	3	-15	0	5.93	0	0			8		330	331	332	
42			M		0	0							9		344	345	346	
43			L			-5									350	351		
44			N			-10									352	353	354	
45			P			-15									358	359	360	
46			M			0				-20			10		387		388	
47			N			-10							10		389		390	
48			A	-5		0							11		396		397	
49			H			-10									398		399	
51			J			-20									406		400	
52			A	5		0							12		409		410	
53			H			-10									411		412	
55			J			-20									419		413	
56			A	0	0	0							13		422		423	
57			H			-10									424		425	
59			J			-20									432		426	
60			A		3	0							14		435			
61			H		3	-10							14		436			

TEST RUN NUMBERS

7 13 19 25 31 37 43 49 55 61 67 75 76

IDVAR (1) IDVAR (2) NDV

α OR β SCHEDULES — COEFFICENTS

J(ΔZ) = 750, 800, 900, 1000

K(ΔZ) = 800, 900, 1000

L(ΔZ) = 200, 300, 400, 500, 600

M(ΔZ) = 30, 100, 200, 300, 400, 500

TABLE II. (Continued)

TEST: AEDC VA422 (IA17A)

DATA SET/RUN NUMBER COLLATION SUMMARY

DATE: 3/15/74

DATA SET IDENTIFIER	CONFIGURATION	SCHD. LY	SCHD. ΔZ	PARAMETERS/VALUES α_o	β_o	$\Delta\alpha$	$\Delta\beta$	M	δ_a	δ_e			GRID	NO. OF RUNS	ΔX, in. full scale 0	200	400	
RTR062	O_1+ET_1	0	K	0	3	-20	0	5.93	0	-20			14		437			
63			A			0				-40					450			
64			H			-10									451			
65			K			-20									452			
66			A		0	0							13		595		596	
67			H			-10									597		598	
69			J			-20									600		599	
70			A	5		0							12		608		609	
71			H			-10									610		611	
73			J			-20									613		612	
74			A	-5		0							11		621		622	
75			H			-10									623		624	
77			J			-20									626		625	
78			M	-10		0							10		634		635	
79			N	-10		-10							10		636		637	
80			A	0	3	0			+15	+15L / -15R			14		462			
81			H			-10									463			
82			K			-20									464			

TEST RUN NUMBERS

7 13 19 25 31 37 43 49 55 61 67 75 76

COEFFICENTS

IDVAR (1) IDVAR (2) NDV

α OR β SCHEDULES

N(ΔZ) = 400, 500, 600, 700, 800

P(ΔZ) = 500, 600, 700, 800

R(ΔZ) = 200, [illegible]00, 400, 500, 600, 700, 800

T(ΔZ) = 20[illegible]00, 200, 300, 400, 500

TABLE II. (Continued)

TEST: AEDC VA422 (IA17A)

DATA SET/RUN NUMBER COLLATION SUMMARY

DATE: 3/15/74

DATA SET IDENTIFIER	CONFIGURATION	SCHD. ΔY	SCHD. ΔZ	α_o	β_o	$\Delta\alpha$	$\Delta\beta$	M	δ_a	δ_e	GRID	NO. OF RUNS	ΔX, in. full scale 0	200	400
RTR083	$O_1 + ET_1$	D	A	0	0	0	0	5.93	+15	+15L/-15R	13		469		470
084			H			-10							471		472
086			J			-20							479		473
087			A	5		0					12		482		483
088			H			-10							484		485
090			J			-20							492		486
091			A	-5		0					11		495		496
092			H			-10							497		498
094			J			-20							505		499
095			M	-10		0					10		521		522
096			N	-10		-10					10		523		524
097			A	0	3	0			0	+15	14		581		
098			H			-10							582		
099			K			-20							583		
100			A		0	0					13		568		569
101			H			-10							570		571
103			J			-20							578		572
104			A	5		0					12		555		556

TEST RUN NUMBERS

13 19 25 31 37 43 49 55 61 67 75 76

COEFFICENTS — IDVAR (1) IDVAR (2) NDV

α OR β SCHEDULES: U(ΔZ) = 400, 500, 600

TABLE II. (Continued)

TEST: AEDC VA422 (IA17A) — DATA SET/RUN NUMBER COLLATION SUMMARY — DATE: 3/15/74

DATA SET IDENTIFIER	CONFIGURATION	SCHD. ΔY	SCHD. ΔZ	α_o	β_o	$\Delta\alpha$	$\Delta\beta$	M	δ_a	δ_e	GRID	NO. OF RUNS	ΔX, in. full scale 0	200	400
RTR 105	$O_1 + ET_1$	O	H	5	0	-10	0	5.93	0	+15	12		557		558
107			J	5		-20					12		565		559
108			A	-5		0					11		542		543
109			H			-10							544		545
111			J			-20							552		546
112			M	-10		0					10		533		534
113			N			-10					10		535		536
114			R	10		-5				0	23		643	644	
115			N			-10							645	646	647
116			P			-15							651	652	653
117			K			-20							654	655	656
118			R		3	-5					27		673	674	
119			N			-10							675	676	677
120			P			-15							681	682	683
121			K			-20							684	685	686
122			T	0	0	0		7.98			16		717	718	
123			L			-5							721	722	
124			H			-10							723	724	725

TEST RUN NUMBERS

1 7 13 19 25 31 37 43 49 55 61 67 75 76

COEFFICENTS — IDVAR (1) — IDVAR (2) — NDV

α OR β

SCHEDULES

TABLE II. (Continued)

TEST: AEDC VA422 (IA17A)

DATA SET/RUN NUMBER COLLATION SUMMARY

DATE: 3/15/74

DATA SET IDENTIFIER	CONFIGURATION	SCHD. ΔY	SCHD. ΔZ	α_o	β_o	$\Delta\alpha$	$\Delta\beta$	M	δ_a	δ_e	P_o	GRID	NO. OF RUNS	ΔX, in. full scale 0	200	400
RTR125	$O_1 + ET_1$	0	I	0	0	-15	0	7.98	0	0	–	16		729	730	731
127			J			-20					–			736	732	733
128			T			0					300			868	869	
129			L			-5								872	873	
130			H			-10								874	875	876
131			T		3	0					420	17		747	748	
132			L			-5								751	752	
133			H			-10								753	754	755
134			I			-15								759	760	761
136			J			-20								766	762	763
137			T	5		0						25		807	808	
138			L			-5								811	812	
139			U			-10								813	814	815
140			I			-15								818	820	821
142			J			-20								826	822	823
143			T	-5		0						18		838	839	
144			L			-5								842	843	
145			U			-10								844	845	846

TEST RUN NUMBERS

7 13 19 25 31 37 43 49 55 61 67 75 76

COEFFICENTS IDVAR (1) IDVAR (2) NDV

α OR β SCHEDULES

TABLE II. (Continued)

TEST: AEDC VA422 (IA17A) — DATA SET/RUN NUMBER COLLATION SUMMARY — DATE: 3/15/74

DATA SET IDENTIFIER	CONFIGURATION	SCHD. ΔY	SCHD. ΔZ	α_0	β_0	$\Delta\alpha$	$\Delta\beta$	M	δ_a	δ_e	P_0	GRID	NO. OF RUNS	ΔX, in. full scale 0	200	400
RTR 146	$O_1 + ET_1$	0	I	-5	3	-15	0	7.98	0	0	420	18		850	851	852
148			J	-5	3	-20			0	0	370	18		857	853	854
149			T	0	0	0			+15	+15L / -15R	300	21		887		
150			H			-10								888		
151			K			-20								889		
152			T	-5		0						20		891		
153			U			-10								892		
154			K			-20								893		
155			T	0		0			0	-20		21		903		
156			H			-10								904		
157			K			-20								905		
158			T	-5		0						20		899		
159			U			-10								900		
160			K			-20								901		
161			T	0		0				-40		21		914		
162			H			-10								915		
163			K			-20								916		
164			T	-5		0						20		918		

TEST RUN NUMBERS

1 7 13 19 25 31 37 43 49 55 61 67 75 76

COEFFICENTS — IDVAR (1) — IDVAR (2) — NDV

α OR β SCHEDULES

TABLE II. (Continued)

TEST: AEDC VA422 (IA17A) — DATA SET/RUN NUMBER COLLATION SUMMARY — DATE: 3/15/74

DATA SET IDENTIFIER	CONFIGURATION	SCHD. ΔY	SCHD. ΔZ	α_o	β_o	$\Delta\alpha$	$\Delta\beta$	M	δ_o	δ_e	P_o	GRID	NO. OF RUNS	ΔX, in. full scale 0	200	400	TEST RUN NUMBERS
RTR165	0, +ET,	0	U	-5	0	-10	0	7.98	0	-40	300	20		919			
166			K	-5	0	-20						20		920			
167			M	-10	3	0						8		922	923		
168			L			-5								926	927		
169			N			-10								928	929	930	
170			P			-15								934	935	936	
171			T	-5	0	0								938	939		
172			L			-5								942	943		
173			U			-10								944	945	946	
174			T			-15								950	951	952	
176			J			-20								957	953	954	
177			T	5		0						24		968	969		
178			L			-5								972	973		
179			U			-10								974	975	976	
180			I			-15								980	981	982	
182			J			-20								987	983	984	

1 7 13 19 25 31 37 43 49 55 61 67 75 76

COEFFICENTS — IDVAR (1) — IDVAR (2) — NCV

α OR β SCHEDULES

TABLE II. (Continued)

TEST: AEDC VA422 (IA17A) — DATA SET/RUN NUMBER COLLATION SUMMARY — DATE: 3/15/74

DATA SET IDENTIFIER	CONFIGURATION	SCHD. ΔY	SCHD. ΔZ	α_o	β_o	$\Delta\alpha$	$\Delta\beta$	M	δ_a	δ_e	GRID	NO. OF RUNS	ΔX, in. full scale 0	200	400
RTR201	$O_1 + ET_1$	60	A	0	0	0	0	5.93	0	0	1		61	60	59
202			C			-10							69	68	67
203			E			-20							78	77	76
205			J			-20							382	375	374
206			A			0	3						91	92	
207			C			-10							85	86	87
208			E			-20							79	80	81
210			J			-20							383	376	377
211			A		3	0	0				3		114	113	
212			H			-10							122	121	120
214			J			-20							131	129	128
215			A			0	3						156	157	
216			H			-10							150	151	152
218			J			-20							136	132	133
219			A	5	0	0	0				5		204	203	202
220			H			-10							212	211	210
222			J			-20							221	217	218
223			A			0	3						234	235	

TEST RUN NUMBERS

7 13 19 25 31 37 43 49 55 61 67 75 76

COEFFICENTS — IDVAR (1) — IDVAR (2) — NDV

α OR β SCHEDULES

TABLE II. (Continued)

TEST: AEDC VA 122 (IA17A) — DATA SET/RUN NUMBER COLLATION SUMMARY — DATE: 3/15/74

DATA SET IDENTIFIER	CONFIGURATION	SCHD. ΔY	SCHD. Δ7	α_o	β_o	$\Delta\alpha$	$\Delta\beta$	M	δ_a	δ_e			GRID	NO. OF RUNS	ΔX, in. full scale 0	200	400	
RTR224	O, + ET,	60	H	5	0	-10	3	5.93	0	0			5		228	229	230	
226			J		0	-20	3						5		226	222	223	
227			A		3	0	0						4		164	163		
228			H			-10									172	171	170	
230			J			-20									181	179	178	
231			A			0	3								194	195		
232			H			-10									188	189	190	
234			J			-20									186	182	183	
235			A	-5	0	0	0						6		244	243	242	
236			H			-10									252	251	250	
238			J			-20									~~261~~	259	258	
239			A			0	3								274	275		
240			H			-10									268	269	270	
242			J			-20									266	262	263	
243			A		3	0	0						7		282	281		
244			H			-10									290	289	288	
246			J			-20									299	297	296	
247			A			0	3								312	313		

TEST RUN NUMBERS

1 13 19 25 31 37 43 49 55 61 67 75 76

COEFFICENTS — IDVAR (1) IDVAR (2) NCV

α OR β SCHEDULES

TABLE II. (Continued)

TEST: AEDC VA422 (IA17A)

DATA SET/RUN NUMBER COLLATION SUMMARY

DATE: 3/15/74

DATA SET IDENTIFIER	CONFIGURATION	SCHD. ΔY	SCHD. ΔZ	α_o	β_o	$\Delta\alpha$	$\Delta\beta$	M	δ_a	δ_e			GRID	NO. OF RUNS	ΔX, in. full scale 0	200	400	
RTR248	O, + ET,	60	H	-5	3	-10	3	5.93	0	0			7		306	309	308	
250			J	-5		-20	3						7		304	300	301	
251			M	-10		0	0						8		321	320		
252			N			-10	0								329	328	327	
253			M			0	3								339	340		
254			N			-10	3								333	334	335	
255			M		0	0	0						9		349	348	347	
256			N			-10	0								357	356	355	
257			M			0	3								367	368		
258			N			-10									361	362	363	
259			M			0				-20			10		393		394	
260			N			-10							10		39[illegible]		392	
261			A	-5		0							11		404		405	
262			H			-10									40[illegible]		403	
264			J			-20									40[illegible]		401	
265			A	5		0							12		41[illegible]		418	
266			H			-10									415		416	
268			J			-20									420		414	

TEST RUN NUMBERS

7 13 19 25 31 37 43 49 55 61 67 75 76

COEFFICENTS IDVAR (1) IDVAR (2) NDV

α OR β

SCHEDULES A

TABLE II. (Continued)

TEST: AEDC VA422 (IA17A) — DATA SET/RUN NUMBER COLLATION SUMMARY — DATE: 3/15/74

DATA SET IDENTIFIER	CONFIGURATION	SCHD. ΔY	SCHD. ΔZ	α_o	β_o	$\Delta\alpha$	$\Delta\beta$	M	δ_a	δ_e	GRID	NO. OF RUNS	ΔX, in. full scale 0	200	400
RTR269	O, +ET,	60	A	0	0	0	3	5.93	0	-20	13		430		431
270			H			-10							428		429
272			J			-20							433		427
273			A		3	0					14		440		
274			H			-10							439		
275			K			-20							438		
277			H			-10				-40			454		
278			K			-20							453		
279			A		0	0					13		605		606
280			H			-10							603		604
282			J			-20							[illegible]		[illegible]
283			A	5		0					12		618		[illegible]
284			H			-10							616		617
286			J			-20							614		615
287			A	-5		0					11		631		632
255			H			-10							629		630
290			J			-20							627		628
291			M	-10		0					10		640		641

TEST RUN NUMBERS

1 7 13 19 25 31 37 43 49 55 61 67 75 76

COEFFICENTS — IDVAR (1) — IDVAR (2) — NDV

α OR β

SCHEDULES

TABLE II. (Continued)

TEST: AEDC VA422 (IA17A) — DATA SET/RUN NUMBER COLLATION SUMMARY — DATE: 3/15/74

DATA SET IDENTIFIER	CONFIGURATION	SCHD. ΔY	SCHD. ΔZ	α_o	β_o	$\Delta\alpha$	$\Delta\beta$	M	δ_a	δ_e			GRID	NO. OF RUNS	ΔX, in. full scale 0	200	400	
RTR292	O, + ET,	60	N	-10	0	-10	3	5.93	0	-40			10		638		639	
293			A	0	3	0			+15	+15L / -15R			14		467			
294			H			-10									466			
295			K			-20									465			
296			A		0	0							13		477		478	
297			H			-10									475		476	
299			J			-20									480		474	
300			A	5		0							12		490		491	
301			H			-10									48[illegible]		489	
303			J			-20									493		4[illegible]	
304			A	-5		0							11		503		504	
305			H			-10									5[illegible]		5[illegible]	
307			J			-20									506		506	
308			M	-10		0							10		519		520	
309			N	-10		-10							10		517		518	
310			A	0	3	0			0	15			14		586			
311			H			-10									585			
312			K			-20									584			

TEST RUN NUMBER

1 13 19 25 31 37 43 49 55 61 67 75 76

COEFFICENTS — IDVAR (1) IDVAR (2) NDV

α OR β

SCHEDULES

TABLE II. (Continued)

TEST: AEDC VA422 (IA17A) — DATA SET/RUN NUMBER COLLATION SUMMARY — DATE: 3/15/74

DATA SET IDENTIFIER	CONFIGURATION	SCHD. ΔY	SCHD. ΔZ	α_o	β_o	$\Delta\alpha$	$\Delta\beta$	M	δ_a	δ_e	P_o	GRID	NO. OF RUNS	Δx, in. full scale 0	200	400
RTK313	O_1 + ET,	60	A	0	0	0	3	5.93	0	15	—	13		576		577
314			H			-10								574		575
316			J			-20								579		573
317			A	5		0						12		563		564
319			H			-10								561		562
320			J			-20								566		560
321			A	-5		0						11		550		551
322			H			-10								548		549
324			J			-20								553		547
325			M	-10		0						10		539		540
326			N			-10						10		537		538
327			N	10		-10	0			0		23		650	649	648
328			K			-20	0							659	658	657
329			N			-10	3							666	667	668
330			K			-20	3							660	661	662
331			N		3	-10	0				94	27		680	679	678
332			K			-20	0							689	688	687
333			N			-10	3							696	697	698

TEST RUN NUMBERS

1 13 19 25 31 37 43 49 55 61 67 75 76

COEFFICENTS — IDVAR (1) — IDVAR (2) — NCV

α OR β SCHEDULES

TABLE II. (Continued)

TEST: AEDC VA422 (IA17A) — DATA SET/RUN NUMBER COLLATION SUMMARY — DATE: 3/15/74

DATA SET IDENTIFIER	CONFIGURATION	SCHD. ΔY	SCHD. ΔZ	α_o	β_o	$\Delta\alpha$	$\Delta\beta$	M	δ_a	δ_e	P_o	GRID	NO. OF RUNS	ΔX, in. full scale 0	200	400
RTR334	O_1+ET_1	60	K	10	3	-20	3	5.93	0	0	94	27		690	691	692
335			T	0	0	0	0	7.98			420	16		720	719	
336			H			-10								728	727	726
338			J			-20								737	735	734
339			T			0	3							744	745	
340			H			-10								741	742	743
342			J			-20								740	738	739
343			T			0	0				300			871	870	
344			H			-10					300			879	878	877
345			T		3	0					420	17		750	749	
346			H			-10								758	757	756
348			J			-20								767	765	764
349			T			0	3							774	775	
350			H			-10								771	772	773
352			J			-20								770	768	769
353			T	5		0	0					25		810	809	
354			U			-10								818	817	[illegible]
356			J			-20								824	825	824

TEST RUN NUMBERS

COEFFICENTS — IDVAR (1) — IDVAR (2)

α OR β

SCHEDULES

TABLE II. (Continued)

TEST: AEDC VA422 (IA17A) — DATA SET RUN NUMBER COLLATION SUMMARY — DATE: 3/15/74

DATA SET IDENTIFIER	CONFIGURATION	SCHD. LY	SCHD. LZ	α_o	β_o	$\Delta\alpha$	$\Delta\beta$	M_i	δ_a	δ_e	P_o	GRID	NO. OF RUNS	Δx, in. full scale 0	.200	400
RTR357	O_1+ET_1	60	T	5	3	0	3	7.98	0	0	420	25		834	835	
358			U			-10								831	832	833
360			J			-20								830	828	829
36			T	-5		0	0					18		841	840	
36			U			-10								849	848	847
364			J			-20					370			858	856	855
365			T			0	3				300			865	866	
366			U			-10					300			862	863	864
368			J			-20					350				859	
369			J			-20					300			861		860
370			M	-10		0	0					8		925	924	
371			N	-10		-10						8		933	932	931
372			T	-5	0	0						19		941	940	
373			J			-10								949	948	947
375			J			-20								958	956	955
376			T			0	3							965	966	
377			U			-10								962	963	964
379			J			-20								961	959	960

TEST RUN NUMBERS

1 13 19 25 31 37 43 49 55 61 67 75 76

COEFFICENTS — IDVAR (1) — IDVAR (2) — NDC

α OR β SCHEDULES

TABLE II. (Continued)

TEST: AEDC VA422 (IA17A)

DATA SET/RUN NUMBER COLLATION SUMMARY

DATE: 3/15/74

DATA SET IDENTIFIER	CONFIGURATION	SCHD. LY	SCHD. LZ	α_o	β_o	$\Delta\alpha$	$\Delta\beta$	M	δ_o	δ_e	P_o	GRID	NO. OF RUNS	ΔX, in. full scale 0	200	400
RTR380	$O_1 + ET_1$	60	T	5	0	0	0	7.98	0	0	300	24		971	970	
381			U			-10								979	978	977
383			J			-20								988	986	985
384			T			0	3							995	996	
385			U			-10								992	993	994
387			J			-20								991	989	990
401		200	A	0		0		5.93				1		94	93	
402			C			-10								90	89	88
403			E			-20								84	83	82
405			J			-20						26		384	379	378
406			A		3	0						3		159	158	
407			H			-10								155	154	153
409			J			-20								137	135	134
410			A	5	0	0						5		237	236	
411			H			-10								233	232	231
413			J			-20								227	225	224
414			A		3	0						4		197	196	
415			H		3	-10						4		193	192	191

TEST RUN NUMBER

1 7 13 19 25 31 37 43 49 55 61 67 75 76

COEFFICENTS IDVAR (1) IDVAR (2) NCV

α OR β

SCHEDULES

TABLE II. (Continued)

TEST: AEDC VA422 (IA17A) — DATA SET, RUN NUMBER COLLATION SUMMARY — DATE: 3/15/74

DATA SET IDENTIFIER	CONFIGURATION	SCHD. ΔY	SCHD. ΔZ	α_o	β_o	$\Delta\alpha$	$\Delta\beta$	M	δ_o	δ_e	GRID	NO. OF RUNS	ΔX, in. full scale 0	200	400
RTR417	0, +ET,	200	J	5	3	-20	3	5.93	0	0	4		187	185	184
418			A	-5	0	0					6		277	276	
419			H			-10							273	272	271
421			J			-20							267	265	264
422			A		3	0					7		315	314	
423			H			-10							311	310	309
425			J			-20							305	303	302
426			M	-10		0					8		342	341	
427			N			-10					8		338	337	336
428			M		0	0					9		370	369	
429			N			-10					9		366	365	364
430			N	10		-10					23		671	670	669
431			K			-20					23		665	664	663
432			N		3	-10					27		701	700	699
433			K		3	-20					27		695	694	693

TEST RUN NUMBERS

7 13 19 25 31 37 43 49 55 61 67 75 76

COEFFICENTS — IDVAR (1) — IDVAR (2) — NCV

α OR β

SCHEDULES

TABLE II. (Continued)

TEST: AEDC VA422 (IA17A) — DATA SET/RUN NUMBER COLLATION SUMMARY — DATE: 3/15/74

DATA SET IDENTIFIER	CONFIGURATION	SCHD. ΔY	SCHD. ΔZ	α_o	β_o	ΔX	Δβ	M	δ_a	δ_e	P_o		GRID	NO. OF RUNS	ΔX, in. full scale 2000*	
RTR501	O_1	0	1000*	0	0	0	0	5.93	0	0	—		1		101	
502				0	3	0	-3						3		160	
503				5	0	-5	0						5		238	
504				5	3	-5	-3						4		198	
505				-5	0	5	0						6		218	
506				-5	3	5	-3						7		316	
507				-10	3	10	-3						8		343	
508					0		0						9		371	
509										-20			10		395	
510				-5		5							11		408	
511				5		-5							12		421	
512				0		0							13		434	
513					3		-3						14		441	
514					0		0			-40	94		13		607	
515				5		-5							12		620	
516				-5		5							11		633	
517				-10		10							10		642	
518				0	3	0	-3			+15L/-15R	—		14		468	

TEST RUN NUMBERS

7 13 19 25 31 37 43 49 55 61 67 75 76

COEFFICENTS — IDVAR (1) — IDVAR (2) — IDV

α OR β SCHEDULES

*ΔX and ΔZ are not meaningful for this isolated orbiter data and a dummy value of zero was used in these datasets.

TABLE II. (Continued)

TEST: AEDC VA422 (IA17A) — DATA SET/RUN NUMBER COLLATION SUMMARY — DATE: 3/15/74

DATA SET IDENTIFIER	CONFIGURATION	SCHD. ΔY	SCHD. ΔZ	α_o	β_o	Δα	Δβ	M	δ_a	δ_e	P_o	GRID	NO. OF RUNS	ΔX, in. full scale 2000*
RTR519	O_1	0	1000*	0	0	0	0	5.93	15	+15L / -15R	—	13		481
520				5		-5						12		494
521				-5		5						11		507
522				-10		10						10		525
523				0	3	0	-3		0	15	94	14		587
524				0	0	0	0					13		580
525				5		-5						12		567
526				-5		5						11		554
527				-10		10						10		541
528				10		-10				0		23		672
529				10	3	-10	-3					27		702
530				0	0	0	0	7.98			420	16		746
531				0	3	0	-3				300	17		776
532				5		-5					420	25		836
533				-5		5					300	18		867
534				0	0	0	0		15	15L / -15R		21		890
535				-5		5						20		894
536				0		0			0	-20		21		906

TEST RUN NUMBERS

1 7 13 19 25 31 37 43 49 55 61 67 75 76

COEFFICENTS — IDVAR (1) — IDVAR (2) — NDV

α OR β SCHEDULES

*ΔX and ΔZ are not meaningful for this isolated orbiter data and a dummy value of zero was used in these datasets.

TABLE II. (Continued)

TEST: AEDC VA422 (IA17A)

DATA SET/RUN NUMBER COLLATION SUMMARY

DATE: 3/15/74

DATA SET IDENTIFIER	CONFIGURATION	SCHD. ΔY	SCHD. ΔZ	PARAMETERS/VALUES α_o	β_o	ΔX	Δβ	M	δ_a	δ_e	P_o		GRID	NO. OF RUNS	ΔX, in. full scale 2000*			
RTR537	O,	0	1000*	-5	0	5	0	7.98	0	-20	300		20		902			
538				0		0				-40			21		917			
539				-5		5				-40			20		921			
540				-10	3	10	-3			0			8		937			
541				-5	0	5	0						19		967			
542				5	0	-5	0						24		997			

TEST RUN NUMBERS

1 7 13 19 25 31 37 43 49 55 61 67 72 76

COEFFICENTS IDVAR (1) IDVAR (2) NDV

α OR β

SCHEDULES

*ΔX and ΔZ are not meaningful for this isolated orbiter data and a dummy value of zero was used in these datasets.

TABLE II. (Continued)

TEST: AEDC VA422 (IA17A) — DATA SET/RUN NUMBER COLLATION SUMMARY — DATE: 3/15/74

DATA SET IDENTIFIER	CONFIGURATION	SCHD. α	SCHD. β_T	CONTROL DEFLECTION M	CONTROL DEFLECTION GRID			NO. OF RUNS	α_T -25	-20	-15	-10	-5	0	5		
RTR551	ET_1		Q	5.93	15				449	443	444	445	446	447	448		
552			0						455	456	457	458	459	460	461		
553									526	527	528	529	530	531	532		
554									588	589	590	591	592	593	594		
555			Q						703	704	705	706	707	708	709		
556			0	7.98	30				710	711	712	713	714	715	716		
557			Q		15				880	881	882	883	884	885	886		
558									907	908	909	910	911	912	913		
559				5.93					442								

TEST RUN NUMBERS

1 7 13 19 25 31 37 43 49 55 61 67 75 76

COEFFICENTS — IDVAR (1): ALPHA — IDVAR (2): BETA — NDV

α OR β SCHEDULES: $Q(\beta_{ET}) = 0, 3, 6$

NASA-MSFC-MAF

TABLE II. (Continued)

TEST: AEDC VA422 (IA17A)

DATA SET/RUN NUMBER COLLATION SUMMARY

DATE: 3/15/74

DATA SET IDENTIFIER	CONFIGURATION	SCHD. ΔY	SCHD. ΔZ	α_o	β_o	$\Delta\alpha$	$\Delta\beta$	M	δ_a	δ_e			GRID	NO. OF PUNS	ΔX, in. full scale 0	200	400	
RTR601	$O_1 + ET_1$	-60	A	0	0	0	-3	5.93	0	0			1		95	96		
602	↓	↓	C	↓	↓	-10	↓	↓	↓	↓			↓		97	98		
603	↓	↓	E	↓	↓	-20	↓	↓	↓	↓			↓		99	100		

TEST RUN NUMBERS

1 7 13 19 25 31 37 43 49 55 61 67 75 76

COEFFICENTS IDVAR (1) IDVAR (2) NDV

α OR β

SCHEDULES

TABLE II. (Concluded)

TEST: AEDC VA422 (IA17A) | DATA SET/RUN NUMBER COLLATION SUMMARY | DATE: 3/15/74

DATA SET IDENTIFIER	CONFIGURATION	SCHD. ΔY	SCHD. ΔX	PARAMETERS/VALUES α_o	β_o	$\Delta\alpha$	$\Delta\beta$	M	δ_o	δ_e			GRID	NO. OF RUNS	ΔZ 20	200	400	
RTR701	$O_1 + ET_1$	F	0	0	0	0	3	5.93	0	0			2		104	103	102	
702	↓	↓	↓	↓	↓	↓	0	↓	↓	↓			↓		105	106	107	
703	↓	↓	↓	↓	↓	↓	-3	↓	↓	↓			↓		110	109	108	

TEST RUN NUMBERS

1 7 13 19 25 31 37 43 49 55 61 67 75 76

IDVAR (1) IDVAR (2) NCV

α OR β SCHEDULES — COEFFICENTS: F(ΔY) = -200, -150, -100, -50, 0, 50, 100, 150, 200

TABLE III. - MODEL DIMENSIONAL DATA

MODEL COMPONENT: ATTACH STRUCTURE - AT_{16}

GENERAL DESCRIPTION: Forward orbiter/FT Attach Structure (2 member structure).

MODEL SCALE: 0.010 MODEL DRAWING: SS-A00117

DRAWING NO.: VL78-000062B, SK-H-4011

DIMENSIONS:

MEMBER		FULL SCALE	MODEL SCALE
#1	X_o	394.38	3.944
	Y_o	0.0	0.0
	Z_o	LWR ML	LWR ML
	X_T	1131.0	11.310
	Y_T	46.8	0.468
	Z_T	561.298	5.613
#2	X_o	394.38	3.944
	Y_o	0.0	0.0
	Z_o	LWR ML	LWR ML
	X_T	1131.0	11.310
	Y_T	- 46.8	- 0.468
	Z_T	561.298	5.613
Diameter of Members:		5.70	0.057

TABLE III. - MODEL DIMENSIONAL DATA - Continued.

MODEL COMPONENT: ATTACH STRUCTURE - AT_{17}

GENERAL DESCRIPTION: Left rear orbiter/ET attach structure (2 member structure)

MODEL SCALE: 0.010 MODEL DRAWING: SS-A00117

DRAWING NO.: VL78-000062B, SK-H-4013

DIMENSIONS:	MEMBER		FULL SCALE	MODEL SCALE
	#1	X_o	1317.00	13.170
		Y_o	- 96.5	- 0.965
		Z_o	267.5	2.675
		X_T	2058.00	20.580
		Y_T	- 125.827	- 1.258
		Z_T	515.00	5.150
	#2	X_o	1317.00	13.170
		Y_o	- 96.5	- 0.965
		Z_o	267.5	2.675
		X_T	2058.00	20.580
		Y_T	- 125.827	- 1.258
		Z_T	515.5	5.155
Diameter of Members:	#1		11.5	0.115
	#2		15.5	0.155

TABLE III. - MODEL DIMENSIONAL DATA - Continued.

MODEL COMPONENT: ATTACH STRUCTURE - AT_{18}

GENERAL DESCRIPTION: Right rear orbiter/ET attach structure (3 member structure)

MODEL SCALE: 0.010 MODEL DRAWING: SS-A00117

DIMENSIONS:	MEMBER		FULL SCALE	MODEL SCALE
	#1	X_o	1317.00	13.170
		Y_o	96.5	0.965
		Z_o	267.5	2.675
		X_T	1872.0	18.720
		Y_T	125.827	1.258
		Z_T	515.5	5.155
	#2	X_o	1317.0	13.170
		Y_o	96.5	0.965
		Z_o	267.5	2.675
		X_T	2058.0	20.580
		Y_T	125.827	1.258
		Z_T	515.5	5.155
	#3	X_o	1317.0	13.170
		Y_o	54.40	0.544
		Z_o	19.30	0.193
		X_T	2058.0	20.580
		Y_T	2.5	0.025
		Z_T	567.6	5.676
Diameter of Members, In.:	#1		15.5	0.155
	#2		11.5	0.115
	#3		4.5	0.045

TABLE III. - MODEL DIMENSIONAL DATA - Continued.

MODEL COMPONENT: ATTACH STRUCTURE - AT_{20}

GENERAL DESCRIPTION: Aft SRB/ET attach structure (3 member structure)

MODEL SCALE: 0.010 MODEL DRAWING: SS-A00117

DRAWING NO.: VL78-000062B, VL72-000140, VL72-000115

DIMENSIONS:

MEMBER		FULL SCALE	MODEL SCALE
#1	X_B	1317.00	13.170
	Y_B	± 57.0	± 0.570
	Z_B		
	Z_T	457.00	4.570
#2	X_B	1317.00	13.170
	X_T	2058.00	20.580
#3	X_B	1317.00	13.170
	Y_B	± 57.0	± 0.570
	X_T	2058.00	20.580
	Z_T	343.00	3.430
Diameter of Members, In.:		6.0	0.060

TABLE III. - MODEL DIMENSIONAL DATA -- Continued.

MODEL COMPONENT: BODY - B_{19}

GENERAL DESCRIPTION: Fuselage, Configuration 3, per Rockwell Lines

Drawing VL70-000139B

NOTE: Identical to B17 except forebody

MODEL SCALE: .010

DRAWING NUMBER: VL70-000139B

DIMENSIONS:	FULL SCALE	MODEL SCALE
Length - In.	1290.3	12.903
Max. Width - In.	267.6	2.676
Max. Depth - In.	244.5	2.445
Fineness Ratio	4.82175	4.82175
Area - Ft^2		
Max. Cross-Sectional	386.67	0.03867
Planform		
Wetted		
Base		

TABLE III. - MODEL DIMENSIONAL DATA - Continued.

MODEL COMPONENT: CANOPY - C_7

GENERAL DESCRIPTION: Configuration 3 per Rockwell Lines VL70-000139

MODEL SCALE: 0.010

DRAWING NUMBER: VL70-000139

DIMENSIONS:	FULL SCALE	MODEL SCALE
Length (X_o = 433 to X_o = 670) in. FS	237	2.370
Max. Width		
Max. Depth (Z_o = to Z_o = 501) - In. FS		
Fineness Ratio		
Area		
Max. Cross-Sectional		
Planform		
Wetted		
Base		

TABLE III. - MODEL DIMENSIONAL DATA - Continued.

MODEL COMPONENT: ELEVON - E_{23}

GENERAL DESCRIPTION: Configuration 3 per W_{107} Rockwell Lines Drawing VL70-000139B data for (1) of (2) sides

MODEL SCALE: 0.010

DRAWING NUMBER: VL70-000139B

DIMENSIONS:	FULL SCALE	MODEL SCALE
Area - ft^2	205.52	0.02055
Span (equivalent) - in.	353.34	3.533
Inb'd equivalent chord	114.78	1.148
Outb'd equivalent chord	55.00	0.550
Ratio movable surface chord/total surface chord		
At inb'd equiv. chord	0.208	0.208
At outb'd equiv. chord	0.400	0.400
Sweep-back angles, degrees		
Leading edge	0.00	0.00
Trailing Edge	- 10.24	- 10.24
Hingeline	0.00	0.00
Area Moment (Normal to Hingeline) - ft^3 (Product of Area Moment)	1548.07	0.001548

TABLE III. - MODEL DIMENSIONAL DATA - Continued.

MODEL COMPONENT: BODY FLAP - F_5

GENERAL DESCRIPTION: Body flap for fuselage B_{19}

MODEL SCALE: 0.015

DRAWING NUMBER: VL70-000139

DIMENSIONS:	FULL SCALE	MODEL SCALE
Length - In.	84.70	0.8470
Max. Width - In.	267.6	2.676
Max. Depth - In.		
Fineness Ratio		
Area - ft^2		
Max. cross-sectional	142.5195	0.01425
Wetted		
Base	38.0958	0.00380958

TABLE III. - MODEL DIMENSIONAL DATA - Continued.

MODEL COMPONENT: FEEDLINE - FL_3

GENERAL DESCRIPTION: LOX Feedline between ET and orbiter.

MODEL SCALE: 0.010

MODEL DRAWING: SS-A00117

DRAWING NO.: VL78-000062, VL72-000131

DIMESIONS:

		FULL SCALE	MODEL SCALE
Centerline at:	X_T	2017.50	20.175
	Y_T	70.00	0.700
	X_o	1330.50	13.305
	Y_o	70.00	0.700
Diameter:		18.80	0.188

TABLE III. - MODEL DIMENSIONAL DATA - Continued.

MODEL COMPONENT: FEEDLINE - FL_4

GENERAL DESCRIPTION: LH_2 feedline between ET and orbiter.

MODEL SCALE: 0.010 MODEL DRAWING NO.: SS-A00117

DRAWING NO.: VL78-000062, VL72-000131

DIMENSIONS:

		FULL SCALE	MODEL SCALE
Centerline at:	X_T	2017.50	20.175
	Y_T	- 70.00	- 0.700
	X_T	1330.50	13.305
	Y_T	- 70.00	- 0.700
Diameter		18.80	0.188

TABLE III. - MODEL DIMENSIONAL DATA - Continued.

MODEL COMPONENT: OMS Pod - M_4

GENERAL DESCRIPTION: Configuration 3 per Rockwell Lines VL70-000139

NOTE: M_4 identical to M_3 except intersection to fuselage.

MODEL SCALE: 0.010

DRAWING NUMBER: VL70-000139

DIMENSIONS:	FULL SCALE	MODEL SCALE
Length - In.	346.0	3.460
Max. Width - In.	108.0	1.080
Max. Depth - In.	113.0	1.130
Fineness Ratio		
Area - Ft^2		
Max. Cross-Sectional		
Planform		
Wetted		
Base		

TABLE III. - MODEL DIMENSIONAL DATA - Continued.

MODEL COMPONENT: NOZZLES - N8

GENERAL DESCRIPTION: Basic OMS Nozzle of Configuration 2A per Rockwell Lines VL70-008306 and VL70-000089"B". Intersection of nozzle exit plane and nozzle centerline at $X_o = 1570.75$, $Y_o = \pm 99.25$, $Z_o = 507.25$

MODEL SCALE = 0.010

DRAWING NO. VL70-008306, VL70-000089"B", SS-A00092

DIMENSIONS	FULL SCALE	MODEL SCALE
Mach No.		
Length ~ in.		
Gimbal Point to Exit Plane		
Throat to Exit Plane		
Diameter ~ in.		
Exit	50.00	0.500
Throat	N/A	N/A
Inlet	28.00	0.280
Area ~ ft^2./Nozzle		
Exit	13.635	0.00136
Throat		
Gimbal Point (station) ~ in.		
X	1518.0	15.180
Y	±88.0	0.880
Z	492.0	4.920
Null Position ~ deg.		
Pitch	15°49'	15°49'
Yaw (Outb'd)	±12°17'	±12°17'

TABLE III. - MODEL DIMENSIONAL DATA - Continued.

MODEL COMPONENT: MPS NOZZLES - N 24

GENERAL DESCRIPTION: Configuration 3A MPS Nozzles

MODEL SCALE = 0.010

DRAWING NO. VL70-000140A, VL70-005030A

DIMENSIONS	FULL SCALE	MODEL SCALE
Mach No.		
Length ~ in.		
Gimbal Point to Exit Plane		
Throat to Exit Plane		
Diameter ~ in.		
Exit	91.000	0.910
Throat		
Inlet		
Area ~ ft^2. /Nozzle		
Exit	45.16585	0.00452
Throat		
Gimbal Point (station) ~ in.		
Upper Nozzle		
X	1445	14.450
Y	0	0
Z	443	4.430
Lower Nozzles		
X	1468.16996	14.68170
Y	±53.00000	± 0.530
Z	342.63988	3.42640
Null Position ~ deg.		
Upper Nozzle		
Pitch	16°	16°
Yaw	0°	0°
Lower Nozzles		
Pitch	10°	10°
Yaw (outb'd)	3.5°	3.5°

TABLE III. - MODEL DIMENSIONAL DATA - Continued.

MODEL COMPONENT: ET PROTUBERANCE - PT_9

GENERAL DESCRIPTION: LOX Vent line fairing on tank, T_{20}, nose.

MODEL SCALE: 0.010 MODEL DRAWING: SS-A00117

DRAWING NO.: VL78-000062

DIMENSIONS:

		FULL SCALE	MODEL SCALE
Leading edge at:	X_T	350.9	3.509
	Y_T	0.00	0.0
Trailing edge at:	X_T	959.7	9.597
	Y_T	60.00	0.600

TABLE III. - MODEL DIMENSIONAL DATA - Continued.

MODEL COMPONENT: ET PROTUBERANCE - PT_{10}

GENERAL DESCRIPTION: LOX Feedline fairing on tank, T_{20}, tank secured to tank.

MODEL SCALE: 0.010

DRAWING NO.: VL78-000062

DIMENSION		FULL SCALE	MODEL SCALE
Leading edge at:	X_T	985.7	9.857
	YT	- 70.0	- 0.700
Trailing edge at:	X_T	2071.50	20.715
	Y_T	- 70.00	- 0.700

Centerline of LOX feedline located radially at $\phi = 23.5^{\circ}$

TABLE III. - MODEL DIMENSIONAL DATA - Continued.

MODEL COMPONENT: ET PROTUBERANCE - PT_{11}

GENERAL DESCRIPTION: LH_2 feedline fairing on T_{20} tank secured to tank.

MODEL SCALE: 0.010

DRAWING NO.: VL78-000031A

DIMENSIONS:

		FULL SCALE	MODEL SCALE
Leading edge at:	X_T	985.70	9.857
	Y_T	70.00	0.700
Trailing edge at:	X_T	2071.50	20.715
	Y_T	70.00	0.700

Centerline of LH_2 feedline radially located at $\phi = 34.5^{\circ}$

TABLE III. - MODEL DIMENSIONAL DATA - Continued.

MODEL COMPONENT: ET PROTUBERANCE - PT_{12}

GENERAL DESCRIPTION: Lightning rod attached to ET nose.

MODEL SCALE: 0.010

DRAWING NO.: VL78-000068A

DIMENSIONS:

	FULL SCALE	MODEL
Length	30.90	0.309
Diameter, In.	3.20	0.320

TABLE III. - MODEL DIMENSIONAL DATA - Continued.

MODEL COMPONENT: RUDDER - R5

GENERAL DESCRIPTION: 2A, 3 and 3A Configuration per Rockwell Lines VL70-000095

Model Scale = 0.010

DRAWING NUMBER: VL70-000095

DIMENSIONS:	FULL-SCALE	MODEL SCALE
Area - FT^2	106.38	0.0106
Span (equivalent) - IN.	201.0	2.010
Inb'd equivalent chord	91.585	0.916
Outb'd equivalent chord	50.833	0.508
Ratio movable surface chord/ total surface chord		
At Inb'd equiv. chord	0.400	0.400
At Outb'd equiv. chord	0.400	0.400
Sweep Back Angles, degrees		
Leading Edge	34.83	34.83
Tailing Edge	26.25	26.25
Hingeline	34.83	34.83
Area Moment (Normal to hinge line)- FT^3 Product of Area and Mean Chord	526.13	0.000526

TABLE III. - MODEL DIMENSIONAL DATA - Continued.

MODEL COMPONENT : EXTERNAL TANK - T_{20}

GENERAL DESCRIPTION : External oxygen-hydrogen tank.

MODEL SCALE: 0.010

DRAWING NUMBER : VL72-000131, VL78-000062

DIMENSIONS :	FULL SCALE	MODEL SCALE
Length, In. (Nose @ X_T=328.92)	1846.905	18.469
Max Width, In. (@ X_T = 975.675)	333.2	3.332
Major ~~Max~~ Depth, In.	330.2	3.302
Fineness Ratio	5.65713	5.65713
Area - Ft^2		
Max. Cross-Sectional (@ X_T = 975.675)	605.534	0.0606
~~Planform~~ Major cross section	594.679	0.0595
W.P. of Tank Centerline, Z, In. ~~Wetted~~	400.000	0.0400
Base (On 330.2 Dia.)	594.679	0.0595

TABLE III. - MODEL DIMENSIONAL DATA - Continued.

MODEL COMPONENT: VERTICAL - V_1

GENERAL DESCRIPTION: Centerline vertical tail, double-wedge airfoil with rounded leading edge.

NOTE: Same as V_5, but with manipulator housing removed.

MODEL SCALE: 0.010

DRAWING NUMBER: VL70-000139

DIMENSIONS:	FULL-SCALE	MODEL SCALE
TOTAL DATA		
Area (Theo) Ft^2	425.92	0.0425
Planform		
Span (Theo) In	315.72	3.157
Aspect Ratio	1.675	1.675
Rate of Taper	0.507	0.507
Taper Ratio	0.404	0.404
Sweep Back Angles, degrees		
Leading Edge	45.000	45.000
Trailing Edge	26.249	26.249
0.25 Element Line	41.130	41.130
Chords:		
Root (Theo) WP	268.50	2.685
Tip (Theo) WP	108.47	1.085
MAC	199.81	1.998
Fus. Sta. of .25 MAC	1463.50	14.635
W. P. of .25 MAC	635.522	6.355
B. L. of .25 MAC	0.00	0.00
Airfoil Section		
Leading Wedge Angle Deg	10.000	10.000
Trailing Wedge Angle Deg	14.920	14.920
Leading Edge Radius	2.0	0.020
Void Area	13.17	0.131
Blanketed Area	0.00	0.00

ORIGINAL PAGE IS
OF POOR QUALITY

TABLE III. - MODEL DIMENSIONAL DATA -- Concluded.

MODEL COMPONENT: WING-W 107

GENERAL DESCRIPTION: Configuration 3 per Rockwell Lines VL70-000139B

NOTE: Same as W103, except cuff, airfoil and incidence angle.

Model Scale = 0.010

TEST NO. DWG. NO. VL70-000139B

DIMENSIONS:	FULL-SCALE	MODEL SCALE
TOTAL DATA		
Area (Theo.) Ft^2		
Planform	2690.00	0.2690
Span (Theo In.	936.68	9.3668
Aspect Ratio	2.265	2.265
Rate of Taper	1.177	1.177
Taper Ratio	0.200	0.200
Dihedral Angle, degrees (@ TE of Elevon)	3.500	3.500
Incidence Angle, degrees	0.500	0.500
Aerodynamic Twist, degrees	+3.000	+3.000
Sweep Back Angles, degrees		
Leading Edge	45.000	45.000
Trailing Edge	-10.24	-10.24
0.25 Element Line	35.209	35.209
Chords:		
Root (Theo) B.P.0.0.	689.24	6.892
Tip, (Theo) B.P.	137.85	1.378
MAC	474.81	4.748
Fus. Sta. of .25 MAC	1136.89	11.3689
W.P. of .25 MAC	299.20	2.992
B.L. of .25 MAC	182.13	1.8213
EXPOSED DATA		
Area (Theo) Ft^2	1752.29	0.1752
Span, (Theo) In. BP108	720.68	7.2068
Aspect Ratio	2.058	2.058
Taper Ratio	0.2451	0.2451
Chords		
Root BP108	562.40	5.6240
Tip 1.00 $\frac{b}{2}$	137.85	1.3785
MAC	393.03	3.9303
Fus. Sta. of .25 MAC	1185.31	11.8531
W.P. of .25 MAC	300.20	3.002
B.L. of .25 MAC	251.76	2.518
Airfoil Section (Rockwell Mod NASA) XXXX-64		
Root $\frac{b}{2}$ =	0.10	0.10
Tip $\frac{b}{2}$ =	0.12	0.12
Data for (1) of (2) Sides		
Leading Edge Cuff		
Planform Area Ft^2	118.333	0.0118
Leading Edge Intersects Fus M. L. @ Sta	500	5.00
Leading Edge Intersects Wing @ Sta	1083.4	10.834

Notes:

1. Positive directions of force coefficients, moment coefficients, and angles are indicated by arrows
2. For clarity, origins of wind and stability axes have been displaced from the center of gravity

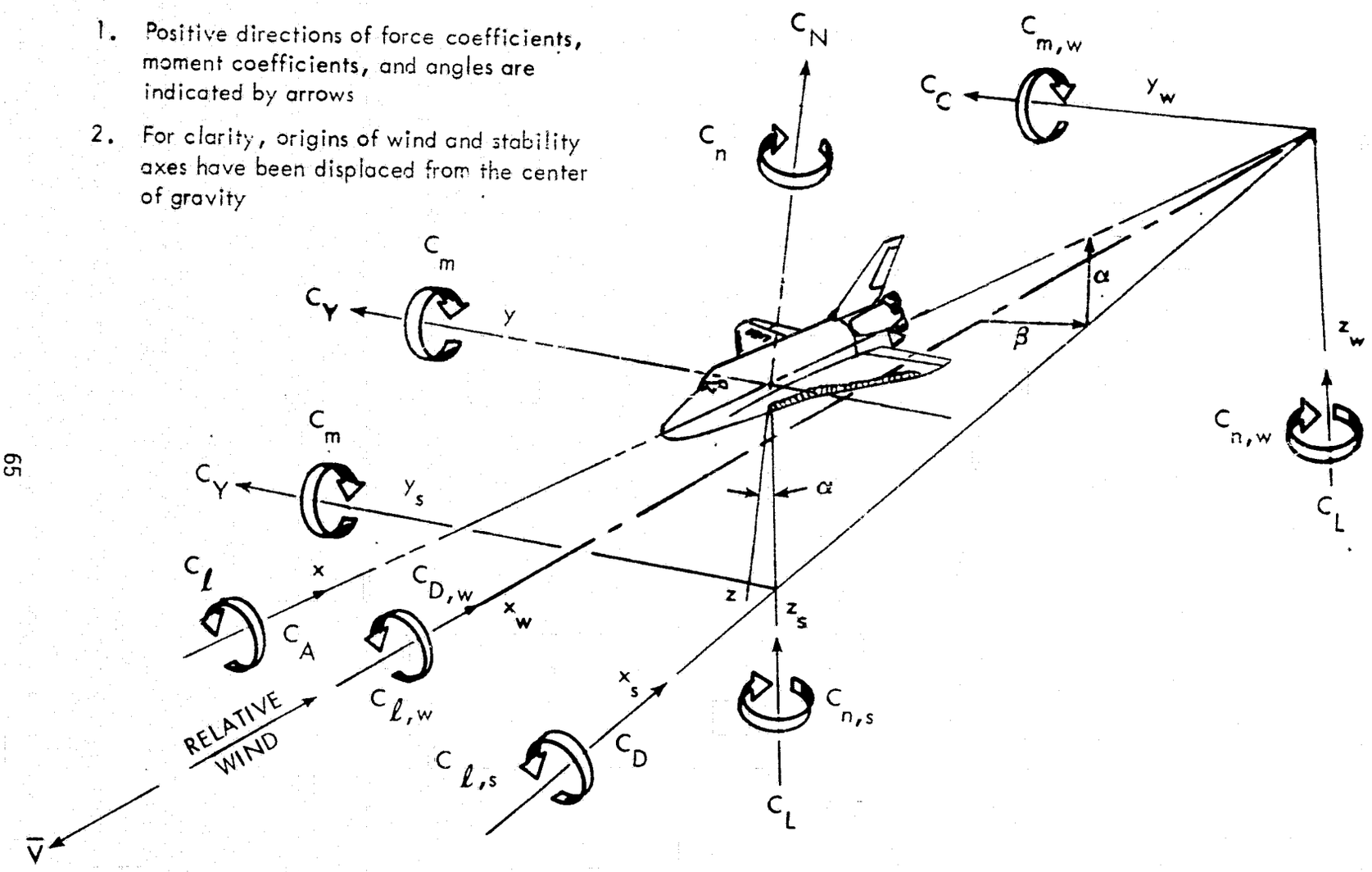

a. General

Figure 1. - Axis systems.

NOTES

1. $\Delta X, \Delta Y$, and $\Delta Z = 0$ in. when tank nose is in its mated position.
2. α and β for tank are defined in similar manner to that indicated for Orbiter.
3. $\Delta\alpha = \alpha_T - \alpha_O$
   $\Delta\beta = \beta_T - \beta_O$

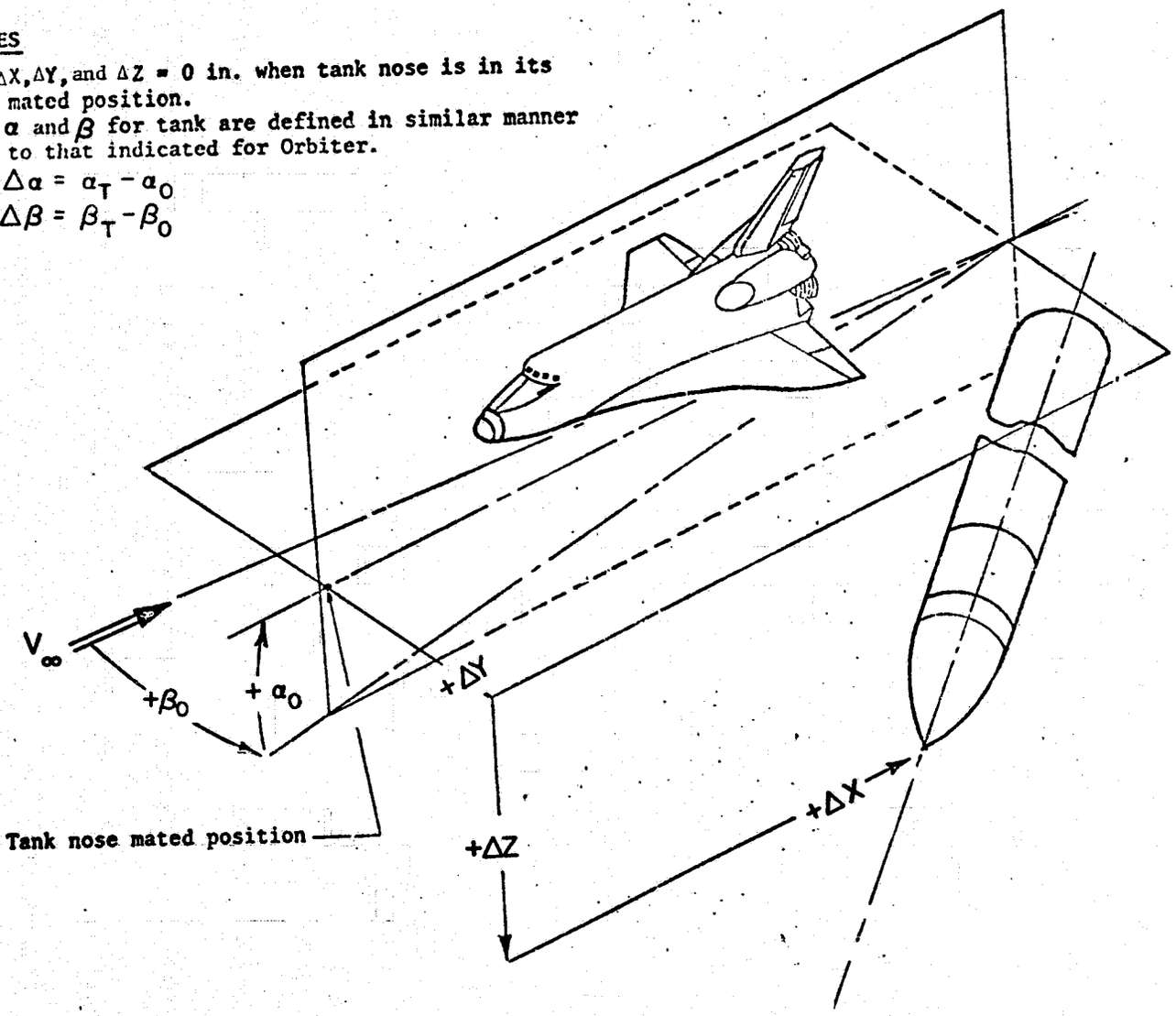

b. Tank Separation From Orbiter

Figure 1. - Concluded.

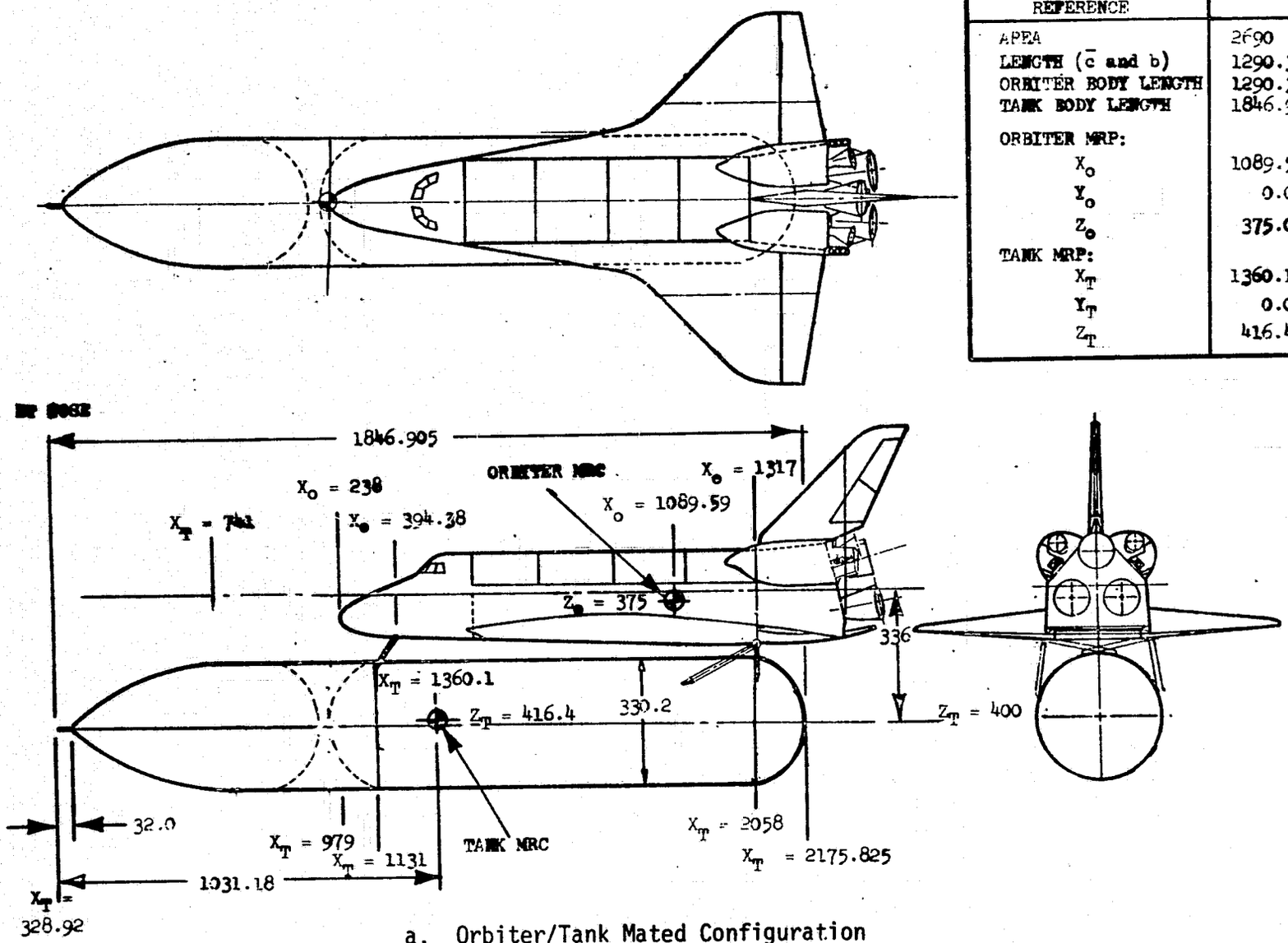

DATA REDUCTION REFERENCE	DIMENSIONS	
AREA	2690	FT^2
LENGTH ($\bar{c}$ and b)	1290.3	IN.
ORBITER BODY LENGTH	1290.3	IN.
TANK BODY LENGTH	1846.905	IN.
ORBITER MRP:		
X_o	1089.59	IN.
Y_o	0.0	
Z_o	375.0	IN.
TANK MRP:		
X_T	1360.1	IN.
Y_T	0.0	IN.
Z_T	416.4	IN.

a. Orbiter/Tank Mated Configuration

Figure 2. - Model sketches.

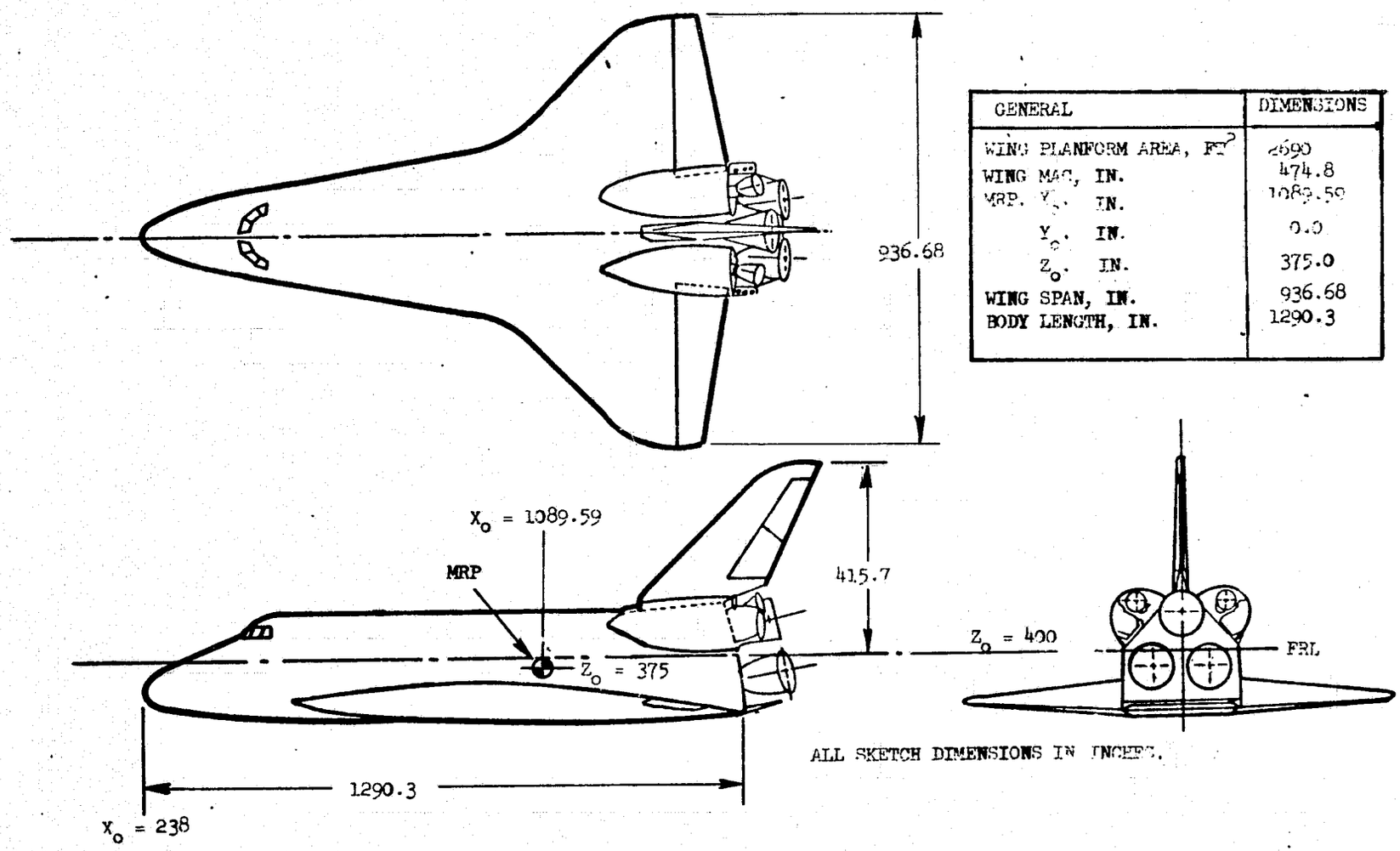

GENERAL	DIMENSIONS
WING PLANFORM AREA, FT^2	2690
WING MAC, IN.	474.8
MRP. X_o, IN.	1089.59
Y_o, IN.	0.0
Z_o, IN.	375.0
WING SPAN, IN.	936.68
BODY LENGTH, IN.	1290.3

b. Orbiter Configuration

Figure 2. - Continued.

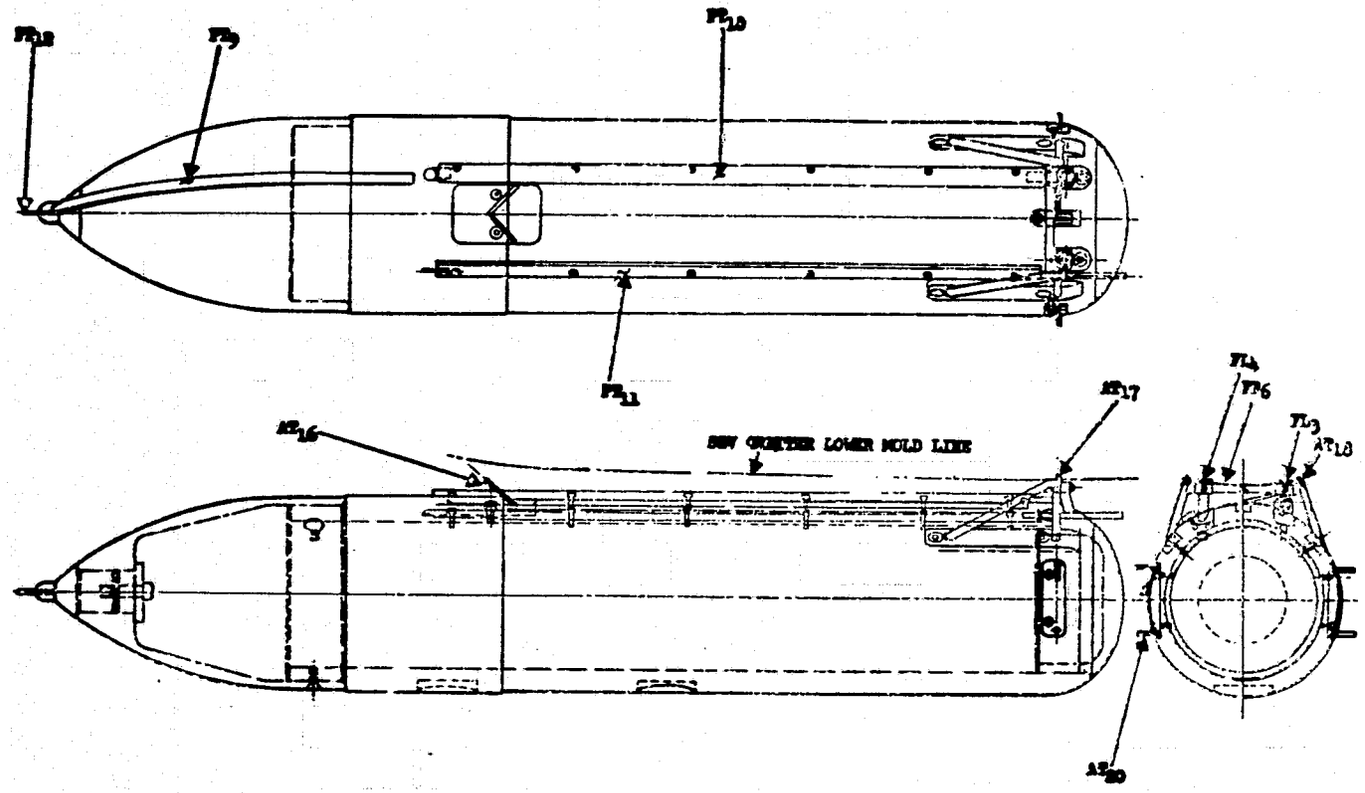

c. External Tank Configuration

Figure 2. - Continued.

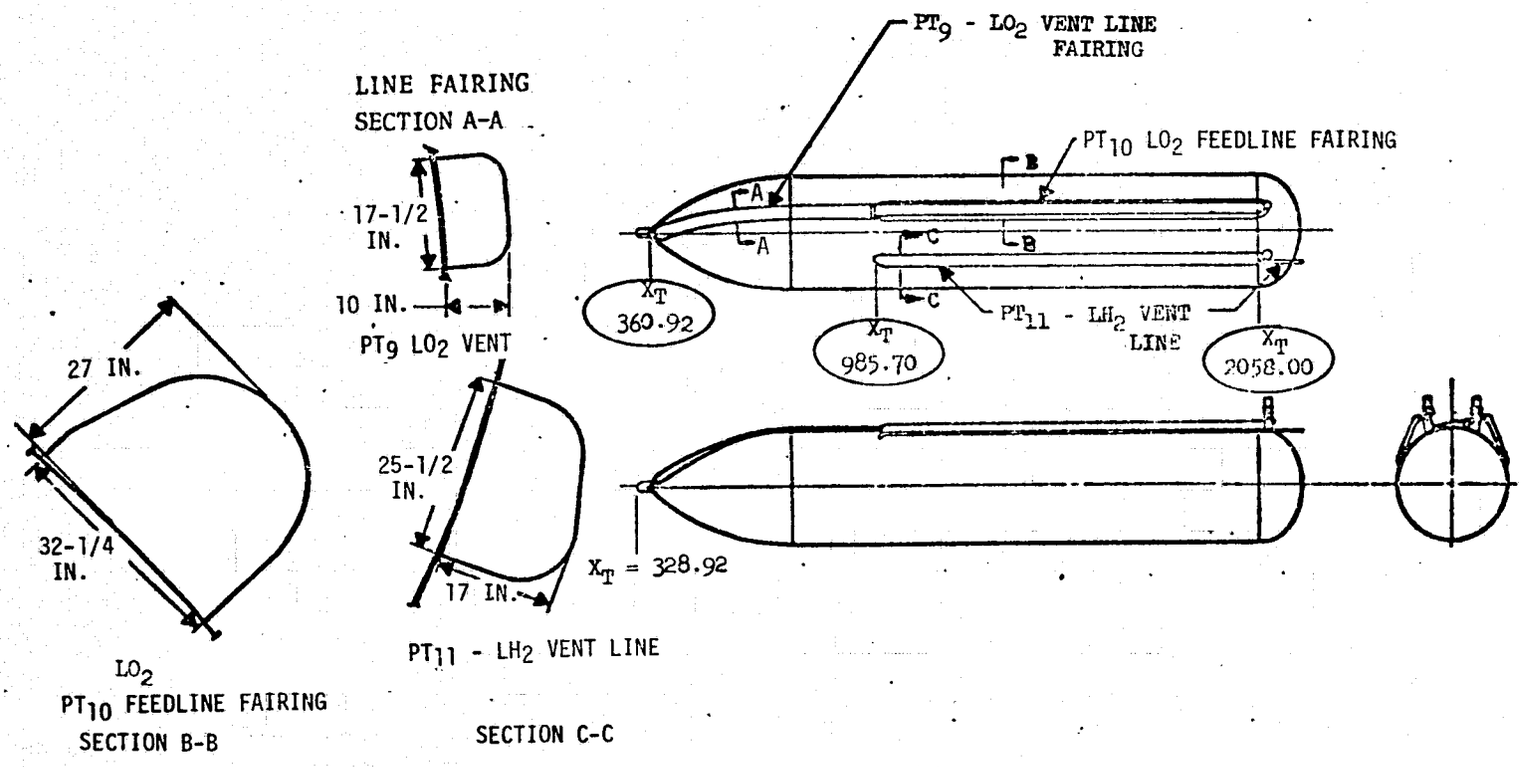

d. External Tank Protuberances

Figure 2. - Concluded.

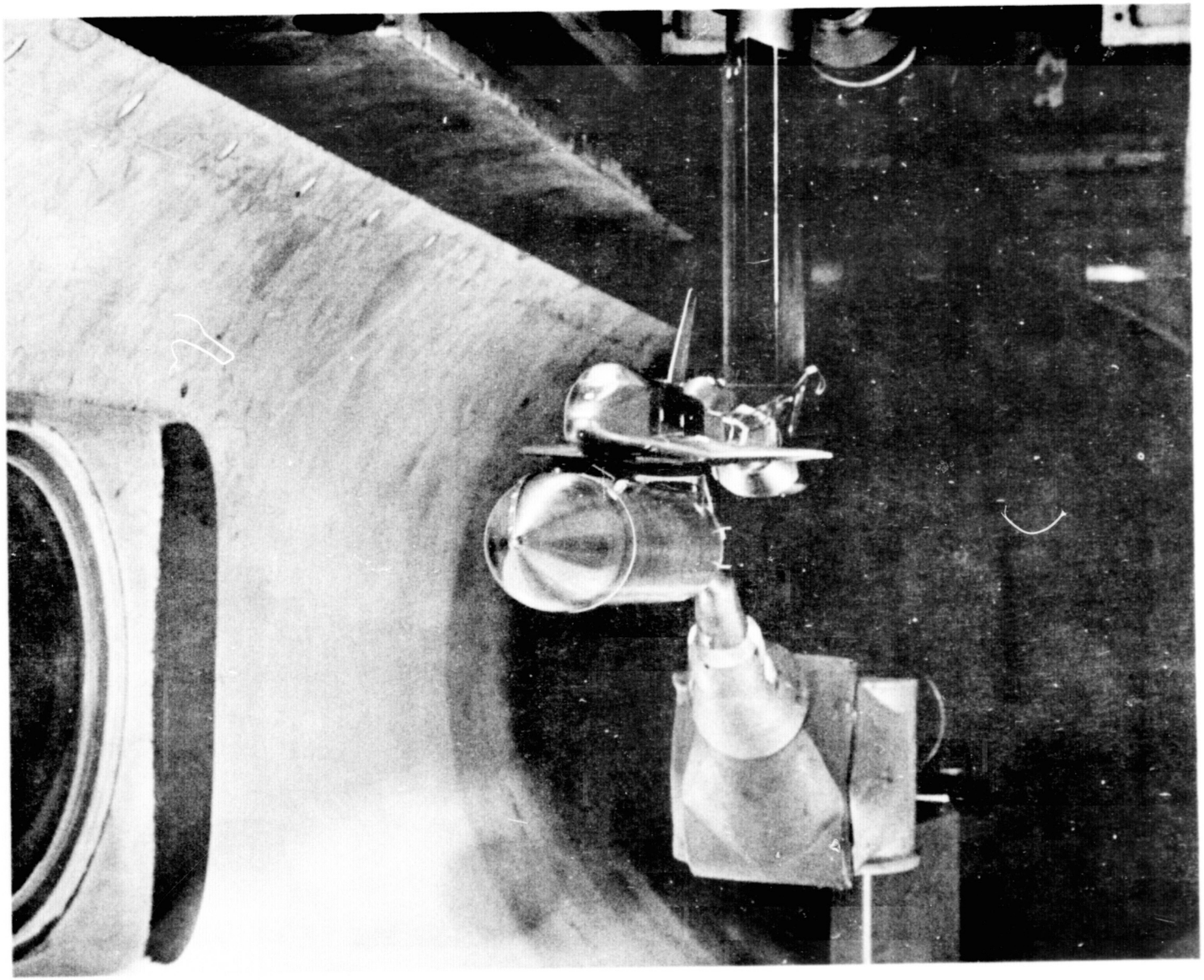

a. Mated Position

Figure 3. - Model photographs.

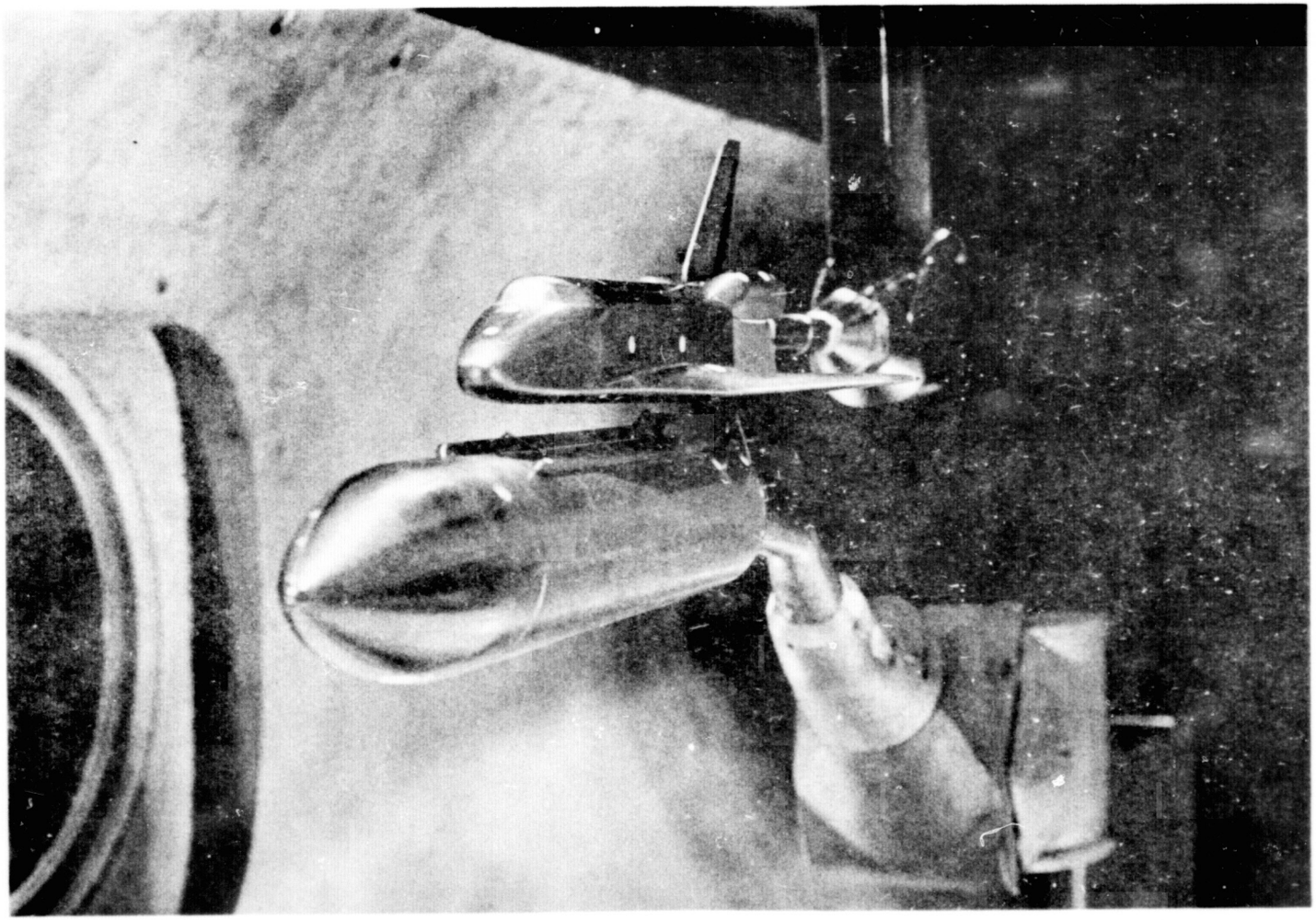

b. Near Separation Position

Figure 3. - Continued.

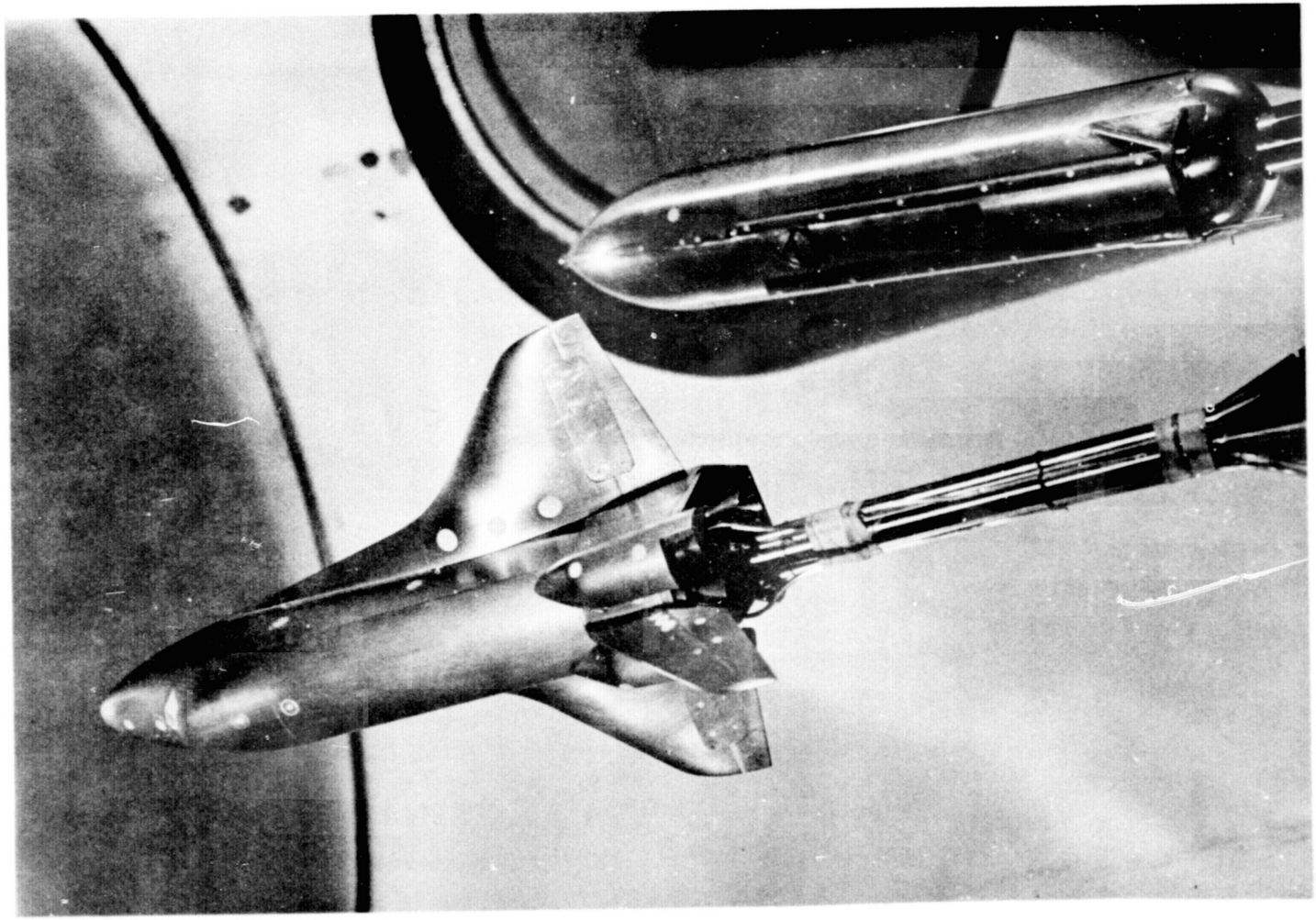

c. Median Separation Position

Figure 3. - Continued.

ORIGINAL PAGE IS
OF POOR QUALITY

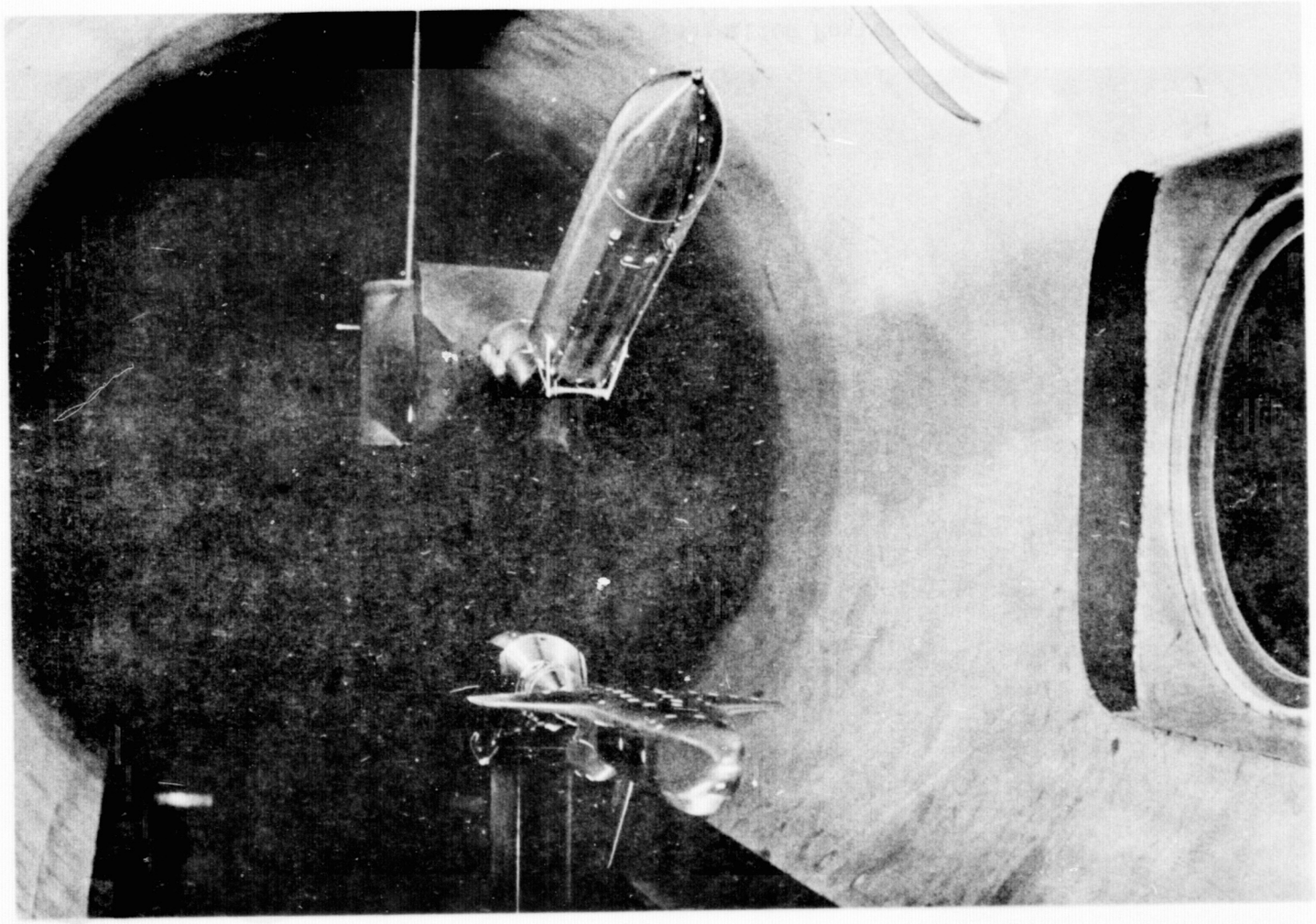

d. Large Separation Position

Figure 3. - Concluded.

APPENDIX

TABULATED SOURCE DATA

Tabulations of plotted data are available from DMS upon request.

AEDC VA422(IA17) ORB AND ET SEPARATING(ORB DATA) (RTR001) (24 JUL 75)

REFERENCE DATA

SREF = 2690.0000 SQ.FT. XMRP = 1089.6000 IN. XO
LREF = 1290.3000 IN. YMRP = .0000 IN. YO
BREF = 1290.3000 IN. ZMRP = 375.0000 IN. ZO
SCALE = .0100

PARAMETRIC DATA

DLT-Y = .000 ALPHA = .000
BETA = .000 DLTALF = .000
DLTBTA = .000 MACH = 5.930
AILRON = .000 ELEVON = .000
GRID = 1.000

RUN NO. 56/ 0 GRADIENT INTERVAL = -5.00/ 5.00

DLT-X	DLT-Z	CN	CA	CLM	CY	CYN	CBL	XCP/L	CPB1	CPB2	CPBC
.399	18.936	-.01941	.08095	-.01202	.00075	-.00006	.00016	.04058	-.03984	-.03988	-.03974
.623	99.506	-.00877	.08832	-.00262	.00133	.00036	.00017	.36121	-.03984	-.03989	-.03972
.480	200.550	.01693	.08399	-.00167	.00107	.00010	-.00036	.75873	-.03987	-.03992	-.03976
.523	302.250	.03864	.08157	-.01428	.00102	.00003	-.00018	1.02950	-.03992	-.03997	-.03981
.545	400.920	-.00891	.07410	-.01662	.00049	.00019	-.00001	-1.20630	-.03990	-.03994	-.03978
.588	500.080	-.04344	.07421	-.01299	.00055	.00020	-.00011	.36104	-.03990	-.03993	-.03977
.583	600.080	-.04882	.07518	-.01137	.00048	.00021	-.00012	.42715	-.03987	-.03992	-.03975
	GRADIENT	.00000	.00000	.00000	.00000	.00000	.00000	.00000	.00000	.00000	.00000

RUN NO. 57/ 0 GRADIENT INTERVAL = -5.00/ 5.00

DLT-X	DLT-Z	CN	CA	CLM	CY	CYN	CBL	XCP/L	CPB1	CPB2	CPBC
200.480	23.109	.00380	.09023	.00272	.00200	.00025	.00048	.00000	-.03983	-.03988	-.03971
200.470	99.517	.00914	.08243	.00253	.00088	.00018	-.00020	.38380	-.03981	-.03988	-.03971
200.540	199.570	.03842	.08264	-.00797	.00041	.00038	-.00008	.86750	-.03986	-.03992	-.03975
200.610	298.550	.02267	.07565	-.01677	.00056	.00018	.00021	1.39980	-.03982	-.03989	-.03972
200.550	398.140	-.03000	.07401	-.01551	.00038	.00019	-.00010	.14296	-.03984	-.03992	-.03974
200.510	499.870	-.04866	.07434	-.01151	.00035	.00020	-.00012	.42341	-.03984	-.03991	-.03973
200.650	600.240	-.04891	.07550	-.01139	.00045	.00020	-.00012	.42715	-.03986	-.03991	-.03974
	GRADIENT	.00000	.00000	.00000	.00000	.00000	.00000	.00000	.00000	.00000	.00000

RUN NO. 58/ 0 GRADIENT INTERVAL = -5.00/ 5.00

DLT-X	DLT-Z	CN	CA	CLM	CY	CYN	CBL	XCP/L	CPB1	CPB2	CPBC
400.550	22.447	.04882	.08323	.00825	.00132	.00021	.00021	.49025	-.03981	-.03987	-.03970
400.470	101.480	.03603	.08165	-.00187	.00101	.00002	-.00009	.71201	-.03980	-.03986	-.03969
400.490	202.560	.05090	.07898	-.01496	.00144	-.00000	.00018	.95394	-.03983	-.03989	-.03972
400.560	301.060	-.00561	.07417	-.01724	.00035	.00018	-.00010	-2.41080	-.03982	-.03988	-.03970
400.550	400.070	-.04345	.07421	-.01306	.00042	.00019	-.00012	.35934	-.03982	-.03988	-.03970
400.590	499.990	-.04904	.07540	-.01139	.00035	.00019	-.00012	.42771	-.03981	-.03987	-.03969
400.590	600.060	-.04905	.07553	-.01140	.00037	.00019	-.00012	.42770	-.03981	-.03987	-.03969
	GRADIENT	.00000	.00000	.00000	.00000	.00000	.00000	.00000	.00000	.00000	.00000

ORIGINAL PAGE IS OF POOR QUALITY

PRECEDING PAGE BLANK NOT FILMED

AEDC VA422(IA17) ORB AND ET SEPARATING(ORB DATA) (RTR002) (24 JUL 75)

REFERENCE DATA

SREF = 2690.0000 SQ.FT. XMRP = 1089.6000 IN. XO
LREF = 1290.3000 IN. YMRP = .0000 IN. YO
BREF = 1290.3000 IN. ZMRP = 375.0000 IN. ZO
SCALE = .0100

PARAMETRIC DATA

DLT-Y = .000 ALPHA = .000
BETA = .000 DLTALF = -5.000
DLTBTA = .000 MACH = 5.930
AILRON = .000 ELEVON = .000
GRID = 1.000

RUN NO. 62/ 0 GRADIENT INTERVAL = -5.00/ 5.00

DLT-X	DLT-Z	CN	CA	CLM	CY	CYN	CBL	XCP/L	CPB1	CPB2	CPBC
.583	203.320	.13211	.08535	-.00625	.00299	.00029	.00067	.70733	-.02609	-.02587	-.02520
.583	301.840	.08108	.08331	-.00938	.00107	.00033	-.00028	.81360	-.02630	-.02608	-.02557
.540	402.180	.04011	.07590	-.01837	.00120	.00022	.00017	1.11800	-.02626	-.02603	-.02555
.537	500.550	-.02344	.07377	-.01823	.00097	.00024	-.00005	-.03226	-.02636	-.02613	-.02573
.612	599.980	-.04828	.07432	-.01184	.00090	.00024	-.00009	.41888	-.02647	-.02627	-.02601
.040	799.500	-.04933	.07576	-.01124	.00102	.00026	-.00009	.43216	-.02599	-.02579	-.02561
	GRADIENT	.00000	.00000	.00000	.00000	.00000	.00000	.00000	.00000	.00000	.00000

RUN NO. 63/ 0 GRADIENT INTERVAL = -5.00/ 5.00

DLT-X	DLT-Z	CN	CA	CLM	CY	CYN	CBL	XCP/L	CPB1	CPB2	CPBC
200.520	197.930	.08763	.08033	-.01214	.00221	.00005	.00012	.79856	-.02769	-.02716	-.02646
200.520	298.660	.06741	.08214	-.01570	.00192	.00002	-.00023	.89284	-.02768	-.02710	-.02625
200.480	397.580	.00574	.07406	-.01803	.00113	.00025	.00009	3.80440	-.02731	-.02670	-.02576
200.450	498.940	-.04038	.07437	-.01377	.00097	.00025	-.00008	.31892	-.02701	-.02641	-.02543
200.600	600.130	-.04911	.07561	-.01123	.00092	.00026	-.00009	.43131	-.02685	-.02628	-.02530
200.510	800.290	-.04930	.07590	-.01124	.00088	.00025	-.00009	.43191	-.02695	-.02643	-.02555
	GRADIENT	.00000	.00000	.00000	.00000	.00000	.00000	.00000	.00000	.00000	.00000

AEDC VA422(IA17) ORB AND ET SEPARATING(ORB DATA) (RTR003) (24 JUL 75)

REFERENCE DATA

SREF = 2690.0000 SQ.FT. XMRP = 1089.6000 IN. XO
LREF = 1290.3000 IN. YMRP = .0000 IN. YO
BREF = 1290.3000 IN. ZMRP = 375.0000 IN. ZO
SCALE = .0100

PARAMETRIC DATA

DLT-Y = .000 ALPHA = .000
BETA = .000 DLTALF = -10.000
DLTBTA = .000 MACH = 5.930
AILRON = .000 ELEVON = .000
GRID = 1.000

RUN NO. 64/ 0 GRADIENT INTERVAL = -5.00/ 5.00

DLT-X	DLT-Z	CN	CA	CLM	CY	CYN	CBL	XCP/L	CPB1	CPB2	CPBC
.624	403.550	.14699	.08144	-.02971	.00130	.00015	.00018	.86215	-.02739	-.02698	-.02590
.471	501.860	.03072	.07352	-.02158	.00104	.00022	-.00001	1.36250	-.02785	-.02741	-.02647
.552	600.150	-.03349	.07360	-.01549	.00087	.00023	-.00008	.19740	-.02836	-.02792	-.02734
-.241	802.080	-.04943	.07592	-.01123	.00098	.00024	-.00009	.43283	-.02876	-.02836	-.02768
	GRADIENT	.00000	.00000	.00000	.00000	.00000	.00000	.00000	.00000	.00000	.00000

AEDC VA422(IA17) ORB AND ET SEPARATING(ORB DATA) (RTR003) (24 JUL 75)

REFERENCE DATA

SREF = 2690.0000 SQ.FT. XMRP = 1089.6000 IN. XO
LREF = 1290.3000 IN. YMRP = .0000 IN. YO
BREF = 1290.3000 IN. ZMRP = 375.0000 IN. ZO
SCALE = .0100

PARAMETRIC DATA

DLT-Y = .000 ALPHA = .000
BETA = .000 DLTALF = -10.000
DLTBTA = .000 MACH = 5.930
AILRON = .000 ELEVON = .000
GRID = 1.000

RUN NO. 65/ 0 GRADIENT INTERVAL = -5.00/ 5.00

DLT-X	DLT-Z	CN	CA	CLM	CY	CYN	CBL	XCP/L	CPB1	CPB2	CPBC
200.510	398.510	.09315	.07287	-.02775	.00134	.00019	.00035	.95787	-.02620	-.02594	-.02460
200.520	497.330	-.00666	.07309	-.01966	.00091	.00023	-.00004	-2.29010	-.02519	-.02503	-.02340
200.430	599.680	-.04660	.07490	-.01209	.00092	.00024	-.00008	.40055	-.02457	-.02445	-.02282
200.520	800.290	-.04888	.07617	-.01129	.00084	.00024	-.00009	.42909	-.02383	-.02368	-.02207
	GRADIENT	.00000	.00000	.00000	.00000	.00000	.00000	.00000	.00000	.00000	.00000

RUN NO. 66/ 0 GRADIENT INTERVAL = -5.00/ 5.00

DLT-X	DLT-Z	CN	CA	CLM	CY	CYN	CBL	XCP/L	CPB1	CPB2	CPBC
400.500	401.890	.02414	.07196	-.02202	.00115	.00022	.00009	1.57210	-.02470	-.02441	-.02325
400.420	500.080	-.03688	.07401	-.01474	.00099	.00023	-.00008	.26043	-.02499	-.02472	-.02358
400.470	600.000	-.04921	.07398	-.01126	.00093	.00024	-.00009	.43124	-.02539	-.02515	-.02421
400.570	800.030	-.04915	.07623	-.01128	.00087	.00024	-.00009	.43043	-.02454	-.02433	-.02324
	GRADIENT	.00000	.00000	.00000	.00000	.00000	.00000	.00000	.00000	.00000	.00000

AEDC VA422(IA17) ORB AND ET SEPARATING(ORB DATA) (RTR004) (24 JUL 75)

REFERENCE DATA

SREF = 2690.0000 SQ.FT. XMRP = 1089.6000 IN. XO
LREF = 1290.3000 IN. YMRP = .0000 IN. YO
BREF = 1290.3000 IN. ZMRP = 375.0000 IN. ZO
SCALE = .0100

PARAMETRIC DATA

DLT-Y = .000 ALPHA = .000
BETA = .000 DLTALF = -15.000
DLTBTA = .000 MACH = 5.930
AILRON = .000 ELEVON = .000
GRID = 1.000

RUN NO. 70/ 0 GRADIENT INTERVAL = -5.00/ 5.00

DLT-X	DLT-Z	CN	CA	CLM	CY	CYN	CBL	XCP/L	CPB1	CPB2	CPBC
.442	500.500	.29401	.08134	-.04700	.00267	-.00008	.00170	.81998	-.01901	-.01934	-.01748
.422	602.100	.08071	.06838	-.03852	.00165	.00005	.00024	1.13720	-.01851	-.01896	-.01624
.081	804.940	-.04895	.07216	-.01126	.00087	.00023	-.00009	.43008	-.02299	-.02289	-.02113
	GRADIENT	.00000	.00000	.00000	.00000	.00000	.00000	.00000	.00000	.00000	.00000

AEDC VA422(IA17) ORB AND ET SEPARATING(ORB DATA) (RTR004) (24 JUL 75)

REFERENCE DATA

SREF = 2690.0000 SQ.FT. XMRP = 1089.6000 IN. XO
LREF = 1290.3000 IN. YMRP = .0000 IN. YO
BREF = 1290.3000 IN. ZMRP = 375.0000 IN. ZO
SCALE = .0100

PARAMETRIC DATA

DLT-Y = .000 ALPHA = .000
BETA = .000 DLTALF = -15.000
DLTBTA = .000 MACH = 5.930
AILRON = .000 ELEVON = .000
GRID = 1.000

RUN NO. 71/ 0 GRADIENT INTERVAL = -5.00/ 5.00

DLT-X	DLT-Z	CN	CA	CLM	CY	CYN	CBL	XCP/L	CPB1	CPB2	CPBC
200.430	500.280	.18527	.06659	-.05726	.00242	-.00008	.00084	.96907	-.02329	-.02329	-.02229
200.480	597.050	-.00261	.06985	-.02341	.00110	.00020	.00012	.00000	-.02321	-.02325	-.02202
200.530	800.250	-.04869	.07516	-.01132	.00093	.00023	-.00009	.42754	-.01906	-.01964	-.01651
	GRADIENT	.00000	.00000	.00000	.00000	.00000	.00000	.00000	.00000	.00000	.00000

RUN NO. 72/ 0 GRADIENT INTERVAL = -5.00/ 5.00

DLT-X	DLT-Z	CN	CA	CLM	CY	CYN	CBL	XCP/L	CPB1	CPB2	CPBC
400.470	501.470	.01735	.06847	-.02379	.00109	.00019	-.00010	2.03110	-.01727	-.01765	-.01524
400.360	600.000	-.04231	.07235	-.01343	.00084	.00022	-.00009	.34246	-.01847	-.01873	-.01665
400.400	800.330	-.04876	.07419	-.01132	.00092	.00023	-.00009	.42791	-.01891	-.01929	-.01707
	GRADIENT	.00000	.00000	.00000	.00000	.00000	.00000	.00000	.00000	.00000	.00000

AEDC VA422(IA17) ORB AND ET SEPARATING(ORB DATA) (RTR005) (24 JUL 75)

REFERENCE DATA

SREF = 2690.0000 SQ.FT. XMRP = 1089.6000 IN. XO
LREF = 1290.3000 IN. YMRP = .0000 IN. YO
BREF = 1290.3000 IN. ZMRP = 375.0000 IN. ZO
SCALE = .0100

PARAMETRIC DATA

DLT-Y = .000 ALPHA = .000
BETA = .000 DLTALF = -20.000
DLTBTA = .000 MACH = 5.930
AILRON = .000 ELEVON = .000
GRID = 1.000

RUN NO. 73/ 0 GRADIENT INTERVAL = -5.00/ 5.00

DLT-X	DLT-Z	CN	CA	CLM	CY	CYN	CBL	XCP/L	CPB1	CPB2	CPBC
.456	802.100	.06966	.06742	-.03732	.00179	.00000	.00029	1.19580	-.00938	-.01030	-.00814
.428	1000.200	-.04873	.07254	-.01129	.00086	.00023	-.00009	.42823	-.00957	-.01041	-.00807
	GRADIENT	.00000	.00000	.00000	.00000	.00000	.00000	.00000	.00000	.00000	.00000

RUN NO. 74/ 0 GRADIENT INTERVAL = -5.00/ 5.00

DLT-X	DLT-Z	CN	CA	CLM	CY	CYN	CBL	XCP/L	CPB1	CPB2	CPBC
200.420	798.700	-.02807	.07071	-.01812	.00082	.00023	.00010	.01444	-.01460	-.01522	-.01363
200.460	1000.200	-.04844	.07512	-.01133	.00093	.00022	-.00009	.42602	-.01386	-.01438	-.01273
	GRADIENT	.00000	.00000	.00000	.00000	.00000	.00000	.00000	.00000	.00000	.00000

AEDC VA422(IA17) ORB AND ET SEPARATING(ORB DATA) (RTR005) (24 JUL 75)

REFERENCE DATA

SREF = 2690.0000 SQ.FT. XMRP = 1089.6000 IN. XO
LREF = 1290.3000 IN. YMRP = .0000 IN. YO
BREF = 1290.3000 IN. ZMRP = 375.0000 IN. ZO
SCALE = .0100

PARAMETRIC DATA

DLT-Y = .000 ALPHA = .000
BETA = .000 DLTALF = -20.000
DLTBTA = .000 MACH = 5.930
AILRON = .000 ELEVON = .000
GRID = 1.000

RUN NO. 75/ 0 GRADIENT INTERVAL = -5.00/ 5.00

DLT-X	DLT-Z	CN	CA	CLM	CY	CYN	CBL	XCP/L	CPB1	CPB2	CPBC
400.420	800.440	-.04835	.07306	-.01133	.00090	.00023	-.00009	.42568	-.01606	-.01615	-.01497
400.390	1000.200	-.04847	.07521	-.01132	.00090	.00022	-.00009	.42644	-.01576	-.01596	-.01499
	GRADIENT	.00000	.00000	.00000	.00000	.00000	.00000	.00000	.00000	.00000	.00000

AEDC VA422(IA17) ORB AND ET SEPARATING(ORB DATA) (RTR006) (24 JUL 75)

REFERENCE DATA

SREF = 2690.0000 SQ.FT. XMRP = 1089.6000 IN. XO
LREF = 1290.3000 IN. YMRP = .0000 IN. YO
BREF = 1290.3000 IN. ZMRP = 375.0000 IN. ZO
SCALE = .0100

PARAMETRIC DATA

DLT-Y = .000 ALPHA = .000
BETA = .000 DLTALF = -20.000
DLTBTA = .000 MACH = 5.930
AILRON = .000 ELEVON = .000
GRID = 26.000

RUN NO. 380/ 0 GRADIENT INTERVAL = -5.00/ 5.00

DLT-X	DLT-Z	CN	CA	CLM	CY	CYN	CBL	XCP/L	CPB1	CPB2	CPBC
.538	801.940	.08787	.08652	-.03704	.00212	.00003	.00020	1.20570	-.01293	-.01371	-.01168
.515	900.480	-.03383	.06906	-.01624	.00127	.00026	-.00004	.17993	-.01393	-.01447	-.01251
.481	1000.300	-.04866	.07176	-.01134	.00119	.00025	-.00010	.42706	-.01536	-.01560	-.01399
	GRADIENT	.00000	.00000	.00000	.00000	.00000	.00000	.00000	.00000	.00000	.00000

ORIGINAL PAGE IS OF POOR QUALITY

AEDC VA422(IA17) ORB AND ET SEPARATING(ORB DATA) (RTR007) (24 JUL 75)

REFERENCE DATA

SREF = 2690.0000 SQ.FT. XMRP = 1089.6000 IN. XO
LREF = 1290.3000 IN. YMRP = .0000 IN. YO
BREF = 1290.3000 IN. ZMRP = 375.0000 IN. ZO
SCALE = .0100

PARAMETRIC DATA

DLT-Y = .000 ALPHA = .000
BETA = .000 DLTALF = -20.000
DLTBTA = .000 MACH = 5.930
AILRON = .000 ELEVON = .000
GRID = 26.000

RUN NO. 381/ 0 GRADIENT INTERVAL = -5.00/ 5.00

DLT-X	DLT-Z	CN	CA	CLM	CY	CYN	CBL	XCP/L	CPB1	CPB2	CPBC
.447	801.930	.06988	.06731	-.03739	.00184	.00003	.00014	1.19510	-.01921	-.01989	-.01720
.483	900.560	-.03291	.07000	-.01669	.00118	.00024	-.00004	.15302	-.02152	-.02191	-.01938
.461	1000.200	-.04907	.07276	-.01140	.00125	.00024	-.00010	.42777	-.02438	-.02440	-.02250
	GRADIENT	.00000	.00000	.00000	.00000	.00000	.00000	.00000	.00000	.00000	.00000

RUN NO. 372/ 0 GRADIENT INTERVAL = -5.00/ 5.00

DLT-X	DLT-Z	CN	CA	CLM	CY	CYN	CBL	XCP/L	CPB1	CPB2	CPBC
200.480	751.020	.04334	.06284	-.03625	.00187	.00010	.00029	1.49640	-.02190	-.02176	-.01976
200.450	800.370	-.02863	.06838	-.01781	.00136	.00027	.00006	.03796	-.02366	-.02342	-.02167
200.420	900.480	-.04883	.07149	-.01123	.00135	.00026	-.00010	.42997	-.02559	-.02533	-.02398
200.400	1000.200	-.04886	.07333	-.01122	.00137	.00025	-.00010	.43038	-.02655	-.02630	-.02508
	GRADIENT	.00000	.00000	.00000	.00000	.00000	.00000	.00000	.00000	.00000	.00000

RUN NO. 373/ 0 GRADIENT INTERVAL = -5.00/ 5.00

DLT-X	DLT-Z	CN	CA	CLM	CY	CYN	CBL	XCP/L	CPB1	CPB2	CPBC
400.400	749.510	-.04816	.07077	-.01142	.00130	.00026	-.00010	.42285	-.01820	-.01827	-.01551
400.410	800.460	-.04832	.07158	-.01135	.00120	.00026	-.00010	.42520	-.01611	-.01612	-.01340
400.430	900.400	-.04830	.07268	-.01132	.00128	.00025	-.00010	.42568	-.01481	-.01479	-.01240
400.370	1000.200	-.04829	.07370	-.01134	.00144	.00027	-.00010	.42526	-.01478	-.01467	-.01276
	GRADIENT	.00000	.00000	.00000	.00000	.00000	.00000	.00000	.00000	.00000	.00000

AEDC VA422(1A17) ORB AND ET SEPARATING(ORB DATA) (RTR008) (24 JUL 75)

REFERENCE DATA

SREF = 2690.0000 SQ.FT. XMRP = 1089.8000 IN. XO
LREF = 1290.3000 IN. YMRP = .0000 IN. YO
BREF = 1290.3000 IN. ZMRP = 375.0000 IN. ZO
SCALE = .0100

PARAMETRIC DATA

DLT-Y = .000 ALPHA = .000
BETA = 3.000 DLTALF = .000
DLTBTA = .000 MACH = 5.930
AILRON = .000 ELEVON = .000
GRID = 3.000

RUN NO. 149/ 0 GRADIENT INTERVAL = -5.00/ 5.00

DLT-X	DLT-Z	CN	CA	CLM	CY	CYN	CBL	XCP/L	CPB1	CPB2	CPBC
.568	18.747	-.01728	.07963	-.01287	-.03720	-.00242	-.00138	-.07385	-.02759	-.02762	-.02698
.604	99.536	-.00475	.08920	-.00352	-.04023	-.00215	-.00091	-.08138	-.02762	-.02766	-.02702
.594	200.540	.01747	.08418	-.00126	-.03940	-.00066	-.00204	.73229	-.02773	-.02777	-.02720
.638	302.100	.03456	.08274	-.01278	-.03289	-.00184	-.00087	1.02970	-.02774	-.02780	-.02723
.627	401.050	-.00893	.07584	-.01616	-.03332	-.00162	.00119	-1.15080	-.02786	-.02790	-.02737
.648	500.020	-.04615	.07596	-.01232	-.03388	-.00163	.00011	.39306	-.02793	-.02796	-.02748
.670	600.030	-.05180	.07701	-.01073	-.03412	-.00157	.00002	.45278	.02792	-.02793	-.02748
	GRADIENT	.00000	.00000	.00000	.00000	.00000	.00000	.00000	.00000	.00000	.00000

RUN NO. 112/ 0 GRADIENT INTERVAL = -5.00/ 5.00

DLT-X	DLT-Z	CN	CA	CLM	CY	CYN	CBL	XCP/L	CPB1	CPB2	CPBC
200.630	23.164	.00844	.09097	.00150	-.03893	-.00182	-.00138	.48226	-.02916	-.02896	-.02877
200.620	99.708	.01149	.06323	.00250	-.04056	-.00116	-.00161	.44225	-.02940	-.02917	-.02894
200.540	199.500	.03529	.08388	-.00660	-.03610	-.00104	-.00162	.84693	-.02919	-.02903	-.02856
200.620	298.610	.02262	.07784	-.01671	-.03239	-.00158	.00144	1.39880	-.02887	-.02872	-.02819
200.580	398.160	-.03051	.07625	-.01514	-.03333	-.00164	.00047	.16377	-.02876	-.02861	-.02808
200.610	499.820	-.05168	.07746	-.01089	-.03374	-.00159	.00006	.44920	-.02856	-.02843	-.02785
200.710	600.220	-.05204	.07788	-.01073	-.03380	-.00157	.00004	.45389	-.02842	-.02830	-.02771
	GRADIENT	.00000	.00000	.00000	.00000	.00000	.00000	.00000	.00000	.00000	.00000

AEDC VA422(IA17) ORB AND ET SEPARATING(ORB DATA) (RTR009) (24 JUL 75)

REFERENCE DATA

SREF = 2690.0000 SQ.FT. XMRP = 1089.6000 IN. XO
LREF = 1290.3000 IN. YMRP = .0000 IN. YO
BREF = 1290.3000 IN. ZMRP = 375.0000 IN. ZO
SCALE = .0100

PARAMETRIC DATA

DLT-Y = .000 ALPHA = .000
BETA = 3.000 DLTALF = -5.000
DLTBTA = .000 MACH = 5.930
AILRON = .000 ELEVON = .000
GRID = 3.000

RUN NO. 115/ 0 GRADIENT INTERVAL = -5.00/ 5.00

DLT-X	DLT-Z	CN	CA	CLM	CY	CYN	CBL	XCP/L	CPB1	CPB2	CPBC
.627	202.150	.10275	.08637	-.00613	-.04006	-.00129	-.00071	.71967	-.02752	-.02756	-.02672
.593	301.940	.06191	.08397	-.00868	-.03552	-.00104	-.00209	.80013	-.02777	-.02780	-.02706
.540	402.260	.04088	.07898	-.01855	-.03089	-.00186	.00230	1.11390	-.02795	-.02799	-.02726
.715	500.510	-.02467	.07610	-.01582	-.03297	-.00164	.00076	.01908	-.02815	-.02817	-.02747
.665	599.990	-.05106	.07742	-.01105	-.03364	-.00159	.00007	.44353	-.02823	-.02823	-.02760
.690	750.080	-.05223	.07815	-.01071	-.03365	-.00156	.00005	.45503	-.02821	-.02818	-.02757
.085	799.260	-.05217	.07817	-.01071	-.03370	-.00156	.00004	.45474	-.02815	-.02813	-.02751
	GRADIENT	.00000	.00000	.00000	.00000	.00000	.00000	.00000	.00000	.00000	.00000

RUN NO. 116/ 0 GRADIENT INTERVAL = -5.00/ 5.00

DLT-X	DLT-Z	CN	CA	CLM	CY	CYN	CBL	XCP/L	CPB1	CPB2	CPBC
200.510	199.160	.09360	.08105	-.01306	-.03929	-.00063	-.00189	.79956	-.02827	-.02812	-.02728
200.490	298.670	.06471	.08429	-.01423	-.03203	-.00188	-.00108	.87983	-.02817	-.02801	-.02703
200.460	397.450	.00708	.07682	-.01817	-.03252	-.00160	.00145	3.22700	-.02781	-.02765	-.02656
200.600	498.780	-.04223	.07684	-.01336	-.03327	-.00164	.00020	.34373	-.02752	-.02738	-.02632
200.480	600.060	-.05178	.07812	-.01071	-.03370	-.00156	.00004	.45319	-.02736	-.02725	-.02622
200.550	750.160	-.05196	.07843	-.01071	-.03361	-.00155	.00004	.45365	-.02726	-.02717	-.02627
200.610	800.120	-.05213	.07847	-.01072	-.03367	-.00156	.00005	.45431	-.02737	-.02729	-.02645
	GRADIENT	.00000	.00000	.00000	.00000	.00000	.00000	.00000	.00000	.00000	.00000

AEDC VA422(IA17) ORB AND ET SEPARATING(ORB DATA) (RTR010) (24 JUL 75)

REFERENCE DATA

SREF = 2690.0000 SQ.FT. XMRP = 1089.6000 IN. XO
LREF = 1290.3000 IN. YMRP = .0000 IN. YO
BREF = 1290.3000 IN. ZMRP = 375.0000 IN. ZO
SCALE = .0100

PARAMETRIC DATA

DLT-Y = .000 ALPHA = .000
BETA = 3.000 DLTALF = -10.000
DLTBTA = .000 MACH = 5.930
AILRON = .000 ELEVON = .000
GRID = 3.000

RUN NO. 117/ 0 GRADIENT INTERVAL = -5.00/ 5.00

DLT-X	DLT-Z	CN	CA	CLM	CY	CYN	CBL	XCP/L	CPB1	CPB2	CPBC
.557	403.760	.14925	.08276	-.02911	-.03205	-.00162	-.00009	.85504	-.02734	-.02734	-.02644
.644	501.940	.03115	.07576	-.02169	-.03182	-.00168	.00228	1.35630	-.02782	-.02782	-.02703
.643	600.220	-.03550	.07596	-.01500	-.03306	-.00167	.00031	.23737	-.02807	-.02807	-.02737
.538	750.070	-.05199	.07834	-.01069	-.03357	-.00155	.00004	.45438	-.02814	-.02811	-.02749
-.124	801.870	-.05212	.07844	-.01070	-.03356	-.00155	.00005	.45465	-.02810	-.02807	-.02745
	GRADIENT	.00000	.00000	.00000	.00000	.00000	.00000	.00000	.00000	.00000	.00000

RUN NO. 118/ 0 GRADIENT INTERVAL = -5.00/ 5.00

DLT-X	DLT-Z	CN	CA	CLM	CY	CYN	CBL	XCP/L	CPB1	CPB2	CPBC
200.450	398.540	.09299	.07670	-.02667	-.03052	-.00185	.00269	.94675	-.02606	-.02620	-.02503
200.510	497.210	-.00560	.07592	-.01944	-.03271	-.00166	.00094	-2.81030	-.02508	-.02531	-.02387
200.510	599.540	-.04894	.07755	-.01156	-.03343	-.00160	.00009	.42373	-.02463	-.02486	-.02352
200.550	750.130	-.05151	.07871	-.01075	-.03345	-.00155	.00005	.45131	-.02467	-.02484	-.02375
200.550	800.220	-.05166	.07871	-.01075	-.03360	-.00157	.00004	.45197	-.02502	-.02515	-.02421
	GRADIENT	.00000	.00000	.00000	.00000	.00000	.00000	.00000	.00000	.00000	.00000

RUN NO. 119/ 0 GRADIENT INTERVAL = -5.00/ 5.00

DLT-X	DLT-Z	CN	CA	CLM	CY	CYN	CBL	XCP/L	CPB1	CPB2	CPBC
400.470	402.100	.02546	.07484	-.02230	-.03194	-.00163	.00156	1.50270	-.02647	-.02656	-.02582
400.460	500.020	-.03811	.07617	-.01441	-.03292	-.00165	.00025	.28196	-.02663	-.02670	-.02607
400.490	600.130	-.05157	.07817	-.01068	-.03344	-.00156	.00005	.45291	-.02653	-.02659	-.02598
400.470	750.080	-.05198	.07879	-.01075	-.03351	-.00156	.00005	.45319	-.02612	-.02619	-.02552
400.530	800.070	-.05192	.07878	-.01075	-.03347	-.00155	.00005	.45302	-.02578	-.02588	-.02516
	GRADIENT	.00000	.00000	.00000	.00000	.00000	.00000	.00000	.00000	.00000	.00000

ORIGINAL PAGE IS OF POOR QUALITY

AEDC VA422(IA17) ORB AND ET SEPARATING(ORB DATA) (RTR011) (24 JUL 75)

REFERENCE DATA

SREF = 2690.0000 SQ.FT. XMRP = 1089.6000 IN. XO
LREF = 1290.3000 IN. YMRP = .0000 IN. YO
BREF = 1290.3000 IN. ZMRP = 375.0000 IN. ZO
SCALE = .0100

PARAMETRIC DATA

DLT-Y = .000 ALPHA = .000
BETA = 3.000 DLTALF = -15.000
DLTBTA = .000 MACH = 5.930
AILRON = .000 ELEVON = .000
GRID = 3.000

RUN NO. 123/ 0 GRADIENT INTERVAL = -5.00/ 5.00

DLT-X	DLT-Z	CN	CA	CLM	CY	CYN	CBL	XCP/L	CPB1	CPB2	CPBC
.547	500.410	.29168	.08583	-.04646	-.02667	-.00266	.00238	.81930	-.02309	-.02408	-.02299
.516	602.170	.08473	.07067	-.03978	-.03048	-.00187	.00266	1.12950	-.02454	-.02479	-.02353
.564	750.320	-.05010	.07641	-.01108	-.03313	-.00161	.00009	.43878	-.02626	-.02638	-.02562
.201	804.780	-.05134	.07743	-.01061	-.03330	-.00158	.00004	.45330	-.02656	-.02660	-.02604
	GRADIENT	.00000	.00000	.00000	.00000	.00000	.00000	.00000	.00000	.00000	.00000

RUN NO. 124/ 0 GRADIENT INTERVAL = -5.00/ 5.00

DLT-X	DLT-Z	CN	CA	CLM	CY	CYN	CBL	XCP/L	CPB1	CPB2	CPBC
200.490	500.260	.18790	.06868	-.05841	-.02978	-.00171	.00360	.97085	-.02538	-.02537	-.02462
200.580	597.120	-.00325	.07314	-.02295	-.03212	-.00173	.00107	.00000	-.02502	-.02500	-.02410
200.600	750.050	-.05069	.07835	-.01072	-.03317	-.00155	.00005	.44927	-.02332	-.02345	-.02225
200.480	800.270	-.05080	.07901	-.01075	-.03323	-.00154	.00005	.44842	-.02321	-.02334	-.02226
	GRADIENT	.00000	.00000	.00000	.00000	.00000	.00000	.00000	.00000	.00000	.00000

RUN NO. 125/ 0 GRADIENT INTERVAL = -5.00/ 5.00

DLT-X	DLT-Z	CN	CA	CLM	CY	CYN	CBL	XCP/L	CPB1	CPB2	CPBC
400.480	501.640	.01722	.07120	-.02340	-.03164	-.00169	.00119	2.01900	-.02433	-.02447	-.02334
400.340	600.130	-.04380	.07623	-.01300	-.03293	-.00163	.00016	.36331	-.02506	-.02511	-.02445
400.440	750.350	-.05082	.07915	-.01072	-.03321	-.00155	.00005	.44903	-.02452	-.02459	-.02396
400.430	800.380	-.05101	.07921	-.01074	-.03317	-.00154	.00005	.44948	-.02412	-.02420	-.02349
	GRADIENT	.00000	.00000	.00000	.00000	.00000	.00000	.00000	.00000	.00000	.00000

AEDC VA422(IA17) ORB AND ET SEPARATING(ORB DATA) (RTR012) (24 JUL 75)

REFERENCE DATA

SREF = 2690.0000 SQ.FT. XMRP = 1089.6000 IN. XO
LREF = 1290.3000 IN. YMRP = .0000 IN. YO
BREF = 1290.3000 IN. ZMRP = 375.0000 IN. ZO
SCALE = .0100

PARAMETRIC DATA

DLT-Y = .000 ALPHA = .000
BETA = 3.000 DLTALF = .000
DLTBTA = .000 MACH = 5.930
AILRON = .000 ELEVON = .000
GRID = 3.000

RUN NO. 111/ 0 GRADIENT INTERVAL = -5.00/ 5.00

DLT-X	DLT-Z	CN	CA	CLM	CY	CYN	CBL	XCP/L	CPB1	CPB2	CPBC
.689	18.867	-.01810	.07999	-.01267	-.03883	-.00241	-.00138	-.03964	-.02754	-.02755	-.02701
.634	99.512	-.00528	.08976	-.00366	-.04005	-.00229	-.00086	-.03227	-.02757	-.02759	-.02706
.627	200.670	.01730	.08465	-.00118	-.03897	-.00064	-.00210	.72849	-.02756	-.02770	-.02722
.698	302.210	.03472	.08337	-.01275	-.03257	-.00185	-.00088	1.02730	-.02768	-.02772	-.02725
.605	401.000	-.00902	.07649	-.01524	-.03310	-.00164	.00121	-1.14000	-.02779	-.02783	-.02738
.646	500.170	-.04656	.07651	-.01232	-.03352	-.00164	.00012	.39547	-.02784	-.02785	-.02746
.695	600.150	-.05200	.07756	-.01073	-.03384	-.00158	.00004	.45364	-.02780	-.02780	-.02747
	GRADIENT	.00000	.00000	.00000	.00000	.00000	.00000	.00000	.00000	.00000	.00000

AEDC VA422(IA17) ORB AND ET SEPARATING(ORB DATA) (RTR013) (24 JUL 75)

REFERENCE DATA

SREF = 2690.0000 SQ.FT. XMRP = 1089.6000 IN. XO
LREF = 1290.3000 IN. YMRP = .0000 IN. YO
BREF = 1290.3000 IN. ZMRP = 375.0000 IN. ZO
SCALE = .0100

PARAMETRIC DATA

DLT-Y = .000 ALPHA = .000
BETA = 3.000 DLTALF = .000
DLTBTA = .000 MACH = 5.930
AILRON = .000 ELEVON = .000
GRID = 3.000

RUN NO. 130/ 0 GRADIENT INTERVAL = -5.00/ 5.00

DLT-X	DLT-Z	CN	CA	CLM	CY	CYN	CBL	XCP/L	CPB1	CPB2	CPBC
.584	801.870	.06881	.06953	-.03773	-.02982	-.00189	.00176	1.20830	-.02055	-.02081	-.01993
.546	900.390	-.03152	.07403	-.01694	-.03250	-.00165	.00042	.12252	-.02105	-.02128	-.02066
.585	1000.300	-.05080	.07779	-.01060	-.03300	-.00158	.00005	.45136	-.02117	-.02133	-.02084
	GRADIENT	.00000	.00000	.00000	.00000	.00000	.00000	.00000	.00000	.00000	.00000

RUN NO. 126/ 0 GRADIENT INTERVAL = -5.00/ 5.00

DLT-X	DLT-Z	CN	CA	CLM	CY	CYN	CBL	XCP/L	CPB1	CPB2	CPBC
200.490	750.990	.04330	.06686	-.03642	-.03097	-.00191	.00085	1.50120	-.01675	-.01738	-.01570
200.550	800.390	-.02848	.07224	-.01792	-.03268	-.00163	.00049	.03079	-.01755	-.01802	-.01665
200.610	900.410	-.05095	.07674	-.01062	-.03312	-.00159	.00005	.45149	-.01746	-.01796	-.01672
200.480	1000.300	-.05071	.07860	-.01068	-.03317	-.00155	.00005	.44947	-.01631	-.01690	-.01539
	GRADIENT	.00000	.00000	.00000	.00000	.00000	.00000	.00000	.00000	.00000	.00000

AEDC VA422(IA17) ORB AND ET SEPARATING(ORB DATA) (RTR013) (24 JUL 75)

REFERENCE DATA

SREF = 2690.0000 SQ.FT. XMRP = 1089.6000 IN. XO
LREF = 1290.3000 IN. YMRP = .0000 IN. YO
BREF = 1290.3000 IN. ZMRP = 375.0000 IN. ZO
SCALE = .0100

PARAMETRIC DATA

DLT-Y = .000 ALPHA = .000
BETA = 3.000 DLTALF = .000
DLTBTA = .000 MACH = 5.930
AILRON = .000 ELEVON = .000
GRID = 3.000

RUN NO. 127/ 0 GRADIENT INTERVAL = -5.00/ 5.00

DLT-X	DLT-Z	CN	CA	CLM	CY	CYN	CBL	XCP/L	CPB1	CPB2	CPBC
400.530	749.570	-.05078	.07494	-.01072	-.03298	-.00163	.00008	.44884	-.01420	-.01508	-.01283
400.450	800.410	-.05082	.07623	-.01064	-.03301	-.00159	.00006	.45068	-.01288	-.01375	-.01154
400.550	900.430	-.05057	.07799	-.01064	-.03314	-.00157	.00005	.44954	-.01290	-.01359	-.01184
400.540	1000.300	-.05055	.07915	-.01069	-.03318	-.00155	.00005	.44855	-.01420	-.01470	-.01355
	GRADIENT	.00000	.00000	.00000	.00000	.00000	.00000	.00000	.00000	.00000	.00000

AEDC VA422(IA17) ORB AND ET SEPARATING(ORB DATA) (RTR014) (24 JUL 75)

REFERENCE DATA

SREF = 2690.0000 SQ.FT. XMRP = 1089.6000 IN. XO
LREF = 1290.3000 IN. YMRP = .0000 IN. YO
BREF = 1290.3000 IN. ZMRP = 375.0000 IN. ZO
SCALE = .0100

PARAMETRIC DATA

DLT-Y = .000 ALPHA = 5.000
BETA = .000 DLTALF = .000
DLTBTA = .000 MACH = 5.930
AILRON = .000 ELEVON = .000
GRID = 5.000

RUN NO. 199/ 0 GRADIENT INTERVAL = -5.00/ 5.00

DLT-X	DLT-Z	CN	CA	CLM	CY	CYN	CBL	XCP/L	CPB1	CPB2	CPBC
.505	19.300	.03498	.06135	-.01233	.00061	-.00030	.00010	1.01260	-.02674	-.02672	-.02607
.554	98.091	.04122	.07435	-.00583	.00100	-.00016	.00026	.80154	-.02641	-.02642	-.02569
.569	199.070	.06234	.07285	.00885	.00078	.00006	-.00002	.51812	-.02601	-.02607	-.02530
.549	300.220	.11141	.07502	.00006	.00104	.00001	-.00003	.65945	-.02563	-.02571	-.02490
.608	402.090	.14610	.07335	-.01370	.00088	.00004	-.00015	.75376	-.02525	-.02535	-.02448
.548	501.120	.09248	.06551	-.01479	.00110	.00000	-.00009	.81993	-.02490	-.02501	-.02406
.724	598.410	.04892	.06621	-.00918	.00098	-.00000	-.00004	.84772	-.02471	-.02482	-.02381
	GRADIENT	.00000	.00000	.00000	.00000	.00000	.00000	.00000	.00000	.00000	.00000

RUN NO. 200/ 0 GRADIENT INTERVAL = -5.00/ 5.00

DLT-X	DLT-Z	CN	CA	CLM	CY	CYN	CBL	XCP/L	CPB1	CPB2	CPBC
200.600	22.544	.04914	.07452	.00005	.00138	-.00029	.00028	.65906	-.02901	-.02897	-.02855
200.590	100.760	.06197	.07231	.00816	.00102	.00006	.00023	.52829	-.02932	-.02926	-.02886
200.570	200.350	.09705	.07429	.00469	.00075	.00000	.00008	.61171	-.02949	-.02940	-.02990
200.530	300.330	.14615	.07526	-.00990	.00101	-.00001	-.00004	.72775	-.02952	-.02940	-.02867
200.680	398.190	.11500	.06661	-.01623	.00101	-.00002	-.00008	.80116	-.02957	-.02942	-.02897
200.620	498.430	.05897	.06588	-.01131	.00098	-.00001	-.00005	.85169	-.02958	-.02943	-.02834
200.680	599.720	.04264	.06752	-.00734	.00092	-.00001	-.00004	.83215	-.02956	-.02940	-.02876
	GRADIENT	.00000	.00000	.00000	.00000	.00000	.00000	.00000	.00000	.00000	.00000

AEDC VA422(IA17) ORB AND ET SEPARATING(ORB DATA) (RTR014) (24 JUL 75)

REFERENCE DATA

SREF = 2690.0000 SQ.FT. XMRP = 1089.6000 IN. XO
LREF = 1290.3000 IN. YMRP = .0000 IN. YO
BREF = 1290.3000 IN. ZMRP = 375.0000 IN. ZO
SCALE = .0100

PARAMETRIC DATA

DLT-Y = .000 ALPHA = 5.000
BETA = .000 DLTALF = .000
DLTBTA = .000 MACH = 5.930
AILRON = .000 ELEVON = .000
GRID = 5.000

RUN NO. 201/ 0 GRADIENT INTERVAL = -5.00/ 5.00

DLT-X	DLT-Z	CN	CA	CLM	CY	CYN	CBL	XCP/L	CPB1	CPB2	CPBC
400.530	21.897	.09019	.07398	.01442	.00133	.00003	.00022	.50007	-.02891	-.02873	-.02795
400.560	100.140	.06959	.07267	.00705	.00082	-.00004	.00018	.58133	-.02889	-.02873	-.02796
400.550	201.360	.14294	.07673	-.00553	.00054	.00014	.00017	.69867	-.02883	-.02866	-.02790
400.490	302.120	.13687	.06782	-.01617	.00087	.00001	-.00038	.77817	-.02886	-.02871	-.02790
400.510	400.560	.07349	.06536	-.01299	.00103	-.00002	-.00013	.83677	-.02910	-.02891	-.02813
400.650	500.060	.04452	.06625	-.00795	.00099	-.00001	-.00004	.83856	-.02929	-.02910	-.02843
400.640	600.040	.04283	.06783	-.00732	.00097	-.00001	-.00004	.83093	-.02932	-.02914	-.02846
	GRADIENT	.00000	.00000	.00000	.00000	.00000	.00000	.00000	.00000	.00000	.00000

AEDC VA422(IA17) ORB AND ET SEPARATING(ORB DATA) (RTR015) (24 JUL 75)

REFERENCE DATA

SREF = 2690.0000 SQ.FT. XMRP = 1089.6000 IN. XO
LREF = 1290.3000 IN. YMRP = .0000 IN. YO
BREF = 1290.3000 IN. ZMRP = 375.0000 IN. ZO
SCALE = .0100

PARAMETRIC DATA

DLT-Y = .000 ALPHA = 5.000
BETA = .000 DLTALF = -5.000
DLTBTA = .000 MACH = 5.930
AILRON = .000 ELEVON = .000
GRID = 5.000

RUN NO. 205/ 0 GRADIENT INTERVAL = -5.00/ 5.00

DLT-X	DLT-Z	CN	CA	CLM	CY	CYN	CBL	XCP/L	CPB1	CPB2	CPBC
.596	201.330	.14672	.07559	.00294	.00185	-.00000	.00060	.63998	-.02893	-.02863	-.02777
.500	300.070	.11279	.07442	.00581	.00073	-.00002	-.00009	.60844	-.02896	-.02870	-.02786
.481	401.570	.15362	.07682	-.00877	.00103	-.00004	-.00015	.71711	-.02891	-.02865	-.02777
.526	502.110	.13932	.06736	-.01766	.00099	-.00003	-.00018	.78677	-.02897	-.02872	-.02784
.517	600.510	.06934	.06543	-.01265	.00099	-.00004	-.00007	.84246	-.02907	-.02881	-.02796
.586	749.980	.04297	.06775	-.00732	.00085	-.00005	-.00005	.83027	-.02907	-.02881	-.02797
-.272	800.730	.04296	.06799	-.00732	.00088	-.00004	-.00004	.83032	-.02906	-.02880	-.02792
	GRADIENT	.00000	.00000	.00000	.00000	.00000	.00000	.00000	.00000	.00000	.00000

AEDC VA422(1A17) ORB AND ET SEPARATING(ORB DATA) (RTR015) (24 JUL 75)

REFERENCE DATA

SREF = 2690.0000 SQ.FT. XMRP = 1089.6000 IN. XO
LREF = 1290.3000 IN. YMRP = .0000 IN. YO
BREF = 1290.3000 IN. ZMRP = 375.0000 IN. ZO
SCALE = .0100

PARAMETRIC DATA

DLT-Y = .000 ALPHA = 5.000
BETA = .000 DLTALF = -5.000
DLTBTA = .000 MACH = 5.930
AILRON = .000 ELEVON = .000
GRID = 5.000

RUN NO. 206/ 0 GRADIENT INTERVAL = -5.00/ 5.00

DLT-X	DLT-Z	CN	CA	CLM	CY	CYN	CBL	XCP/L	CPB1	CPB2	CPBC
200.590	199.280	.13363	.06988	-.00104	.00121	-.00010	.00045	.66779	-.03018	-.02993	-.02928
200.490	299.940	.14704	.07634	-.00324	.00095	.00003	-.00026	.68206	-.03029	-.03001	-.02927
200.590	399.370	.16402	.07000	-.01655	.00139	-.00008	.00011	.76092	-.03017	-.02981	-.02900
200.570	497.480	.09036	.06555	-.01498	.00096	-.00006	.00001	.82577	-.03001	-.02963	-.02882
200.590	599.050	.04790	.06680	-.00904	.00100	-.00004	-.00004	.84870	-.02994	-.02955	-.02874
200.660	750.020	.04293	.06811	-.00733	.00100	-.00003	-.00004	.83084	-.02963	-.02928	-.02840
200.720	800.190	.04296	.06808	-.00733	.00088	-.00004	-.00005	.83055	-.02956	-.02921	-.02837
	GRADIENT	.00000	.00000	.00000	.00000	.00000	.00000	.00000	.00000	.00000	.00000

AEDC VA422(1A17) ORB AND ET SEPARATING(ORB DATA) (RTR016) (24 JUL 75)

REFERENCE DATA

SREF = 2690.0000 SQ.FT. XMRP = 1089.6000 IN. XO
LREF = 1290.3000 IN. YMRP = .0000 IN. YO
BREF = 1290.3000 IN. ZMRP = 375.0000 IN. ZO
SCALE = .0100

PARAMETRIC DATA

DLT-Y = .000 ALPHA = 5.000
BETA = .000 DLTALF = -10.000
DLTBTA = .000 MACH = 5.930
AILRON = .000 ELEVON = .000
GRID = 5.000

RUN NO. 207/ 0 GRADIENT INTERVAL = -5.00/ 5.00

DLT-X	DLT-Z	CN	CA	CLM	CY	CYN	CBL	XCP/L	CPB1	CPB2	CPBC
.443	401.160	.18957	.07476	-.00738	.00094	-.00011	.00022	.69892	-.02865	-.02842	-.02743
.523	502.730	.19278	.07560	-.01766	.00094	-.00008	-.00019	.75158	-.02871	-.02848	-.02749
.527	601.890	.12221	.06551	-.01309	.00087	-.00006	-.00017	.81621	-.02899	-.02875	-.02776
.472	749.950	.04526	.06614	-.00811	.00088	-.00005	-.00004	.83916	-.02979	-.02946	-.02871
-.729	803.170	.04310	.06766	-.00731	.00096	-.00004	-.00004	.82965	-.02986	-.02953	-.02881
	GRADIENT	.00000	.00000	.00000	.00000	.00000	.00000	.00000	.00000	.00000	.00000

RUN NO. 208/ 0 GRADIENT INTERVAL = -5.00/ 5.00

DLT-X	DLT-Z	CN	CA	CLM	CY	CYN	CBL	XCP/L	CPB1	CPB2	CPBC
200.480	399.930	.19998	.07650	-.01425	.00112	-.00003	-.00005	.73124	-.02828	-.02804	-.02692
200.450	497.860	.15636	.06696	-.02138	.00103	-.00006	.00011	.79675	-.02782	-.02757	-.02634
200.550	597.870	.07327	.06536	-.01352	.00088	-.00006	-.00008	.84449	-.02757	-.02735	-.02618
200.630	749.640	.04314	.06802	-.00738	.00091	-.00006	-.00005	.83100	-.02717	-.02699	-.02572
200.620	800.160	.04326	.06822	-.00736	.00078	-.00007	-.00005	.83008	-.02698	-.02681	-.02561
	GRADIENT	.00000	.00000	.00000	.00000	.00000	.00000	.00000	.00000	.00000	.00000

AEDC VA422(IA17) ORB AND ET SEPARATING(ORB DATA) (RTR016) (24 JUL 75)

REFERENCE DATA

SREF = 2690.0000 SQ.FT. XMRP = 1089.6000 IN. XO
LREF = 1290.3000 IN. YMRP = .0000 IN. YO
BREF = 1290.3000 IN. ZMRP = 375.0000 IN. ZO
SCALE = .0100

PARAMETRIC DATA

DLT-Y = .000 ALPHA = 5.000
BETA = .000 DLTALF = -10.000
DLTBTA = .000 MACH = 5.930
AILRON = .000 ELEVON = .000
GRID = 5.000

RUN NO. 209/ 0 GRADIENT INTERVAL = -5.00/ 5.00

DLT-X	DLT-Z	CN	CA	CLM	CY	CYN	CBL	XCP/L	CPB1	CPB2	CPBC
400.520	402.610	.17906	.06710	-.02180	.00111	-.00007	.00012	.78173	-.02718	-.02708	-.02597
400.620	501.040	.09120	.06478	-.01555	.00100	-.00008	.00000	.83053	-.02745	-.02732	-.02623
400.530	600.030	.04758	.06596	-.00889	.00091	-.00005	-.00004	.84675	-.02787	-.02769	-.02676
400.570	750.130	.04324	.06823	[illegible]734	.00092	-.00006	-.00005	.82984	-.02767	-.02749	-.02662
400.430	800.080	.04319	.06827	-.00735	.00084	-.00006	-.00005	.83026	-.02746	-.02726	-.02632
	GRADIENT	.00000	.00000	.00000	.00000	.00000	.00000	.00000	.00000	.00000	.00000

AEDC VA422(IA17) ORB AND ET SEPARATING(ORB DATA) (RTR017) (24 JUL 75)

REFERENCE DATA

SREF = 2690.0000 SQ.FT. XMRP = 1089.6000 IN. XO
LREF = 1290.3000 IN. YMRP = .0000 IN. YO
BREF = 1290.3000 IN. ZMRP = 375.0000 IN. ZO
SCALE = .0100

PARAMETRIC DATA

DLT-Y = .000 ALPHA = 5.000
BETA = .000 DLTALF = -15.000
DLTBTA = .000 MACH = 5.930
AILRON = .000 ELEVON = .000
GRID = 5.000

RUN NO. 213/ 0 GRADIENT INTERVAL = -5.00/ 5.00

DLT-X	DLT-Z	CN	CA	CLM	CY	CYN	CBL	XCP/L	CPB1	CPB2	CPBC
.497	504.090	.33724	.07970	-.02719	.00167	-.00017	.00121	.74063	-.02314	-.02345	-.02179
.513	604.700	.24027	.06764	-.03139	.00115	-.00010	-.00015	.79065	-.02311	-.02342	-.02160
.547	750.600	.07123	.06381	-.01381	.00096	-.00006	-.00009	.85388	-.02385	-.02408	-.02223
.542	799.980	.05026	.06499	-.00972	.00085	-.00007	-.00004	.85334	-.02450	-.02466	-.02295
	GRADIENT	.00000	.00000	.00000	.00000	.00000	.00000	.00000	.00000	.00000	.00000

RUN NO. 214/ 0 GRADIENT INTERVAL = -5.00/ 5.00

DLT-X	DLT-Z	CN	CA	CLM	CY	CYN	CBL	XCP/L	CPB1	CPB2	CPBC
200.470	500.430	.33392	.06949	-.04918	.00219	-.00030	.00050	.80729	-.02650	-.02643	-.02542
200.600	596.270	.15018	.06572	-.02487	.00095	-.00007	-.00012	.82562	-.02657	-.02651	-.02543
200.570	748.000	.04069	.06690	-.00764	.00099	-.00005	-.00004	.84780	-.02620	-.02621	-.02489
200.450	800.370	.04369	.06846	-.00746	.00094	-.00007	-.00004	.83081	-.02566	-.02579	-.02430
	GRADIENT	.00000	.00000	.00000	.00000	.00000	.00000	.00000	.00000	.00000	.00000

ORIGINAL PAGE IS OF POOR QUALITY

AEDC VA422(IA17) ORB AND ET SEPARATING(ORB DATA) (RTR017) (24 JUL 75)

REFERENCE DATA

SREF = 2690.0000 SQ.FT. XMRP = 1089.6000 IN. XO
LREF = 1290.3000 IN. YMRP = .0000 IN. YO
BREF = 1290.3000 IN. ZMRP = 375.0000 IN. ZO
SCALE = .0100

PARAMETRIC DATA

DLT-Y = .000 ALPHA = 5.000
BETA = .000 DLTALF = -15.000
DLTBTA = .000 MACH = 5.930
AILRON = .000 ELEVON = .000
GRID = 5.000

RUN NO. 215/ 0 GRADIENT INTERVAL = -5.00/ 5.00

DLT-X	DLT-Z	CN	CA	CLM	CY	CYN	CBL	XCP/L	CPB1	CPB2	CPBC
400.420	502.530	.17308	.06285	-.02688	.00108	-.00008	.00007	.81523	-.02590	-.02600	-.02467
400.360	600.610	.07706	.06453	-.01524	.00094	-.00008	-.00005	.85776	-.02619	-.02624	-.02514
400.380	750.020	.04369	.06841	-.00744	.00090	-.00008	-.00004	.83022	-.02601	-.02607	-.02503
400.550	800.040	.04376	.06895	-.00746	.00093	-.00007	-.00004	.83047	-.02572	-.02582	-.02466
	GRADIENT	.00000	.00000	.00000	.00000	.00000	.00000	.00000	.00000	.00000	.00000

AEDC VA422(IA17) ORB AND ET SEPARATING(ORB DATA) (RTR019) (24 JUL 75)

REFERENCE DATA

SREF = 2690.0000 SQ.FT. XMRP = 1089.6000 IN. XO
LREF = 1290.3000 IN. YMRP = .0000 IN. YO
BREF = 1290.3000 IN. ZMRP = 375.0000 IN. ZO
SCALE = .0100

PARAMETRIC DATA

DLT-Y = .000 ALPHA = 5.000
BETA = 3.000 DLTALF = -20.000
DLTBTA = .000 MACH = 5.930
AILRON = .000 ELEVON = .000
GRID = 5.000

RUN NO. 220/ 0 GRADIENT INTERVAL = -5.00/ 5.00

DLT-X	DLT-Z	CN	CA	CLM	CY	CYN	CBL	XCP/L	CPB1	CPB2	CPBC
.476	801.390	.15342	.05968	-.03420	.00139	-.00024	.00007	.88290	-.02113	-.02168	-.01995
.381	900.230	.05169	.06501	-.01014	.00089	-.00010	-.00002	.85614	-.02195	-.02241	-.02068
.495	1000.200	.04314	.06615	-.00727	.00083	-.00009	-.00004	.82852	-.02320	-.02349	-.02210
	GRADIENT	.00000	.00000	.00000	.00000	.00000	.00000	.00000	.00000	.00000	.00000

RUN NO. 216/ 0 GRADIENT INTERVAL = -5.00/ 5.00

DLT-X	DLT-Z	CN	CA	CLM	CY	CYN	CBL	XCP/L	CPB1	CPB2	CPBC
200.380	750.710	.10032	.06138	-.02178	.00103	-.00012	.00010	.87714	-.02021	-.02054	-.01941
200.460	800.240	.05825	.06496	-.01150	.00082	-.00007	-.00002	.86435	-.02021	-.02054	-.01950
200.510	900.250	.04367	.06750	-.00737	.00091	-.00007	-.00004	.82873	-.01972	-.02010	-.01912
200.460	1000.100	.04393	.06899	-.00746	.00076	-.00009	-.00005	.82986	-.01846	-.01895	-.01776
	GRADIENT	.00000	.00000	.00000	.00000	.00000	.00000	.00000	.00000	.00000	.00000

AEDC VA422(IA17) ORB AND ET SEPARATING(ORB DATA) (RTR019) (24 JUL 75)

REFERENCE DATA

SREF = 2690.0000 SQ.FT. XMRP = 1089.6000 IN. XO
LREF = 1290.3000 IN. YMRP = .0000 IN. YO
BREF = 1290.3000 IN. ZMRP = 375.0000 IN. ZO
SCALE = .0100

PARAMETRIC DATA

DLT-Y = .000 ALPHA = 5.000
BETA = 3.000 DLTALF = -20.000
DLTBTA = .000 MACH = 5.930
AILRON = .000 ELEVON = .000
GRID = 5.000

RUN NO. 217/ 0 GRADIENT INTERVAL = -5.00/ 5.00

DLT-X	DLT-Z	CN	CA	CLM	CY	CYN	CBL	XCP/L	CPB1	CPB2	CPBC
400.470	749.640	.04801	.06529	-.00900	.00089	-.00008	-.00004	.84748	-.01951	-.01991	-.01842
400.440	800.350	.04366	.06715	-.00738	.00094	-.00007	-.00004	.82898	-.01898	-.01954	-.01776
400.550	900.390	.04404	.06898	-.00746	.00089	-.00009	-.00005	.82947	-.01891	-.01946	-.01781
400.640	1000.500	.04403	.06906	-.00746	.00071	-.00011	-.00005	.82936	-.01979	-.02022	-.01897
	GRADIENT	.00000	.00000	.00000	.00000	.00000	.00000	.00000	.00000	.00000	.00000

AEDC VA422(IA17) ORB AND ET SEPARATING(ORB DATA) (RTR020) (24 JUL 75)

REFERENCE DATA

SREF = 2690.0000 SQ.FT. XMRP = 1089.6000 IN. XO
LREF = 1290.3000 IN. YMRP = .0000 IN. YO
BREF = 1290.3000 IN. ZMRP = 375.0000 IN. ZO
SCALE = .0100

PARAMETRIC DATA

DLT-Y = .000 ALPHA = 5.000
BETA = 3.000 DLTALF = .000
DLTBTA = .000 MACH = 5.930
AILRON = .000 ELEVON = .000
GRID = 4.000

RUN NO. 161/ 0 GRADIENT INTERVAL = -5.00/ 5.00

DLT-X	DLT-Z	CN	CA	CLM	CY	CYN	CBL	XCP/L	CPB1	CPB2	CPBC
.564	19.209	.03605	.06123	-.01391	-.02804	-.00099	-.00283	1.04590	-.02778	-.02775	-.02729
.723	97.776	.03672	.07494	-.00510	-.03185	-.00409	-.00182	.79896	-.02751	-.02744	-.02699
.659	199.090	.06423	.07273	.00857	-.03677	-.00370	-.00192	.52662	-.02725	-.02719	-.02670
.691	300.120	.11271	.07504	-.00005	-.03548	-.00156	-.00196	.66042	-.02701	-.02694	-.02644
.702	402.190	.14916	.07349	-.01440	-.03209	-.00170	-.00248	.75654	-.02671	-.02666	-.02612
.625	501.150	.09578	.06502	-.01584	-.03022	-.00184	-.00162	.82541	-.02655	-.02649	-.02595
.825	598.430	.05001	.06556	-.00972	-.02985	-.00204	-.00099	.85427	-.02642	-.02637	-.02585
	GRADIENT	.00000	.00000	.00000	.00000	.00000	.00000	.00000	.00000	.00000	.00000

RUN NO. 162/ 0 GRADIENT INTERVAL = -5.00/ 5.00

DLT-X	DLT-Z	CN	CA	CLM	CY	CYN	CBL	XCP/L	CPB1	CPB2	CPBC
200.620	22.546	.04555	.07505	.00001	-.03109	-.00452	-.00188	.65987	-.02953	-.02959	-.02923
200.660	100.860	.06005	.07153	.00768	-.03659	-.00481	-.00174	.53212	-.02981	-.02988	-.02953
200.710	200.580	.09796	.07418	.00441	-.03601	-.00204	-.00157	.61502	-.02995	-.03001	-.02961
200.640	300.310	.14732	.07582	-.01028	-.03425	-.00128	-.00248	.72979	-.02999	-.03003	-.02951
200.640	398.120	.11894	.06610	-.01747	-.03037	-.00175	-.00245	.80690	-.03006	-.03009	-.02965
200.790	498.310	.06125	.06513	-.01215	-.03002	-.00200	-.00095	.85840	-.03008	-.03008	-.02962
200.770	599.720	.04325	.06682	-.00770	-.03011	-.00200	-.00100	.83793	-.03003	-.03002	-.02950
	GRADIENT	.00000	.00000	.00000	.00000	.00000	.00000	.00000	.00000	.00000	.00000

AEDC VA422(IA17) ORB AND ET SEPARATING(ORB DATA) (RTR021) (24 JUL 75)

REFERENCE DATA

SREF = 2890.0000 SQ.FT. XMRP = 1089.6000 IN. XO
LREF = 1290.3000 IN. YMRP = .0000 IN. YO
BREF = 1290.3000 IN. ZMRP = 375.0000 IN. ZO
SCALE = .0100

PARAMETRIC DATA

DLT-Y = .000 ALPHA = 5.000
BETA = 3.000 DLTALF = -5.000
DLTBTA = .000 MACH = 5.930
AILRON = .000 ELEVON = .000
GRID = 4.000

RUN NO. 165/ 0 GRADIENT INTERVAL = -5.00/ 5.00

DLT-X	DLT-Z	CN	CA	CLM	CY	CYN	CBL	XCP/L	CPB1	CPB2	CPBC
.641	200.310	.12826	.07474	-.00006	-.03940	-.00453	-.00335	.66045	-.02909	-.02901	-.02821
.623	300.000	.11258	.07464	.00563	-.03752	-.00207	-.00255	.61000	-.02909	-.02902	-.02823
.513	401.650	.15587	.07671	-.00935	-.03472	-.00122	-.00276	.71995	-.02906	-.02898	-.02818
.718	502.050	.13956	.06692	-.01881	-.03014	-.00187	-.00194	.79479	-.02909	-.02904	-.02820
.604	600.500	.07020	.06485	-.01325	-.02990	-.00199	-.00090	.84878	-.02916	-.02912	-.02829
.855	750.020	.04346	.06704	-.00769	-.03012	-.00201	-.00100	.83685	-.02923	-.02918	-.02836
-.151	800.700	.04352	.06729	-.00770	-.03014	-.00201	-.00100	.83697	-.02922	-.02916	-.02833
	GRADIENT	.00000	.00000	.00000	.00000	.00000	.00000	.00000	.00000	.00000	.00000

RUN NO. 166/ 0 GRADIENT INTERVAL = -5.00/ 5.00

DLT-X	DLT-Z	CN	CA	CLM	CY	CYN	CBL	XCP/L	CPB1	CPB2	CPBC
200.610	200.200	.13294	.06930	-.00184	-.03748	-.00290	-.00242	.67382	-.02997	-.02988	-.02924
200.560	300.080	.14764	.07626	-.00355	-.03637	-.00119	-.00222	.68406	-.03000	-.02992	-.02922
200.630	399.350	.16524	.06967	-.01776	-.03169	-.00164	-.00333	.75748	-.02985	-.02976	-.02902
200.680	497.440	.09190	.06498	-.01603	-.03020	-.00186	-.00160	.83446	-.02975	-.02968	-.02893
200.690	599.110	.04801	.06628	-.00938	-.02991	-.00207	-.00101	.85545	-.02968	-.02961	-.02886
200.610	749.960	.04344	.06750	-.00772	-.03020	-.00202	-.00100	.83775	-.02948	-.02941	-.02862
200.770	800.150	.04341	.06745	-.00772	-.03013	-.00202	-.00100	.83779	-.02945	-.02939	-.02951
	GRADIENT	.00000	.00000	.00000	.00000	.00000	.00000	.00000	.00000	.00000	.00000

AEDC VA422(IA17) ORB AND ET SEPARATING(ORB DATA) (RTR022) (24 JUL 75)

REFERENCE DATA

SREF = 2690.0000 SQ.FT. XMRP = 1089.6000 IN. XO
LREF = 1290.3000 IN. YMRP = .0000 IN. YO
BREF = 1290.3000 IN. ZMRP = 375.0000 IN. ZO
SCALE = .0100

PARAMETRIC DATA

DLT-Y = .000 ALPHA = 5.000
BETA = 3.000 DLTALF = -10.000
DLTBTA = .000 MACH = 5.930
AILRON = .000 ELEVON = .000
GRID = 4.000

RUN NO. 167/ 0 GRADIENT INTERVAL = -5.00/ 5.00

DLT-X	DLT-Z	CN	CA	CLM	CY	CYN	CBL	XCP/L	CPB1	CPB2	CPBC
.590	401.110	.18753	.07526	-.00679	-.03763	-.00118	-.00316	.69620	-.02913	-.02904	-.02822
.533	502.960	.19595	.07562	-.01880	-.03277	-.00166	-.00315	.75594	-.02919	-.02908	-.02825
.619	601.760	.12123	.06504	-.02006	-.02995	-.00190	-.00113	.82546	-.02935	-.02926	-.02843
.715	750.010	.04510	.06642	-.00828	-.03008	-.00205	-.00099	.84350	-.02968	-.02962	-.02886
-.623	803.190	.04359	.06709	-.00768	-.03017	-.00203	-.00100	.83614	-.02972	-.02966	-.02893
	GRADIENT	.00000	.00000	.00000	.00000	.00000	.00000	.00000	.00000	.00000	.00000

RUN NO. 168/ 0 GRADIENT INTERVAL = -5.00/ 5.00

DLT-X	DLT-Z	CN	CA	CLM	CY	CYN	CBL	XCP/L	CPB1	CPB2	CPBC
200.450	399.860	.20049	.07690	-.01430	-.03479	-.00115	-.00349	.73134	-.02856	-.02834	-.02744
200.600	497.650	.15582	.06669	-.02279	-.03040	-.00176	-.00262	.80626	-.02819	-.02798	-.02704
200.540	598.050	.07364	.06510	-.01425	-.02987	-.00199	-.00069	.85354	-.02803	-.02781	-.02692
200.670	749.640	.04352	.06741	-.00773	-.03014	-.00203	-.00100	.83769	-.02794	-.02777	-.02686
200.710	800.070	.04369	.06769	-.00774	-.03015	-.00203	-.00100	.83718	-.02786	-.02771	-.02681
	GRADIENT	.00000	.00000	.00000	.00000	.00000	.00000	.00000	.00000	.00000	.00000

RUN NO. 169/ 0 GRADIENT INTERVAL = -5.00/ 5.00

DLT-X	DLT-Z	CN	CA	CLM	CY	CYN	CBL	XCP/L	CPB1	CPB2	CPBC
400.620	402.520	.18105	.06750	-.02363	-.03120	-.00159	-.00418	.79051	-.02830	-.02824	-.02738
400.600	500.960	.09206	.06442	-.01672	-.03013	-.00189	-.00136	.84166	-.02845	-.02838	-.02755
400.750	600.130	.04746	.06622	-.00909	-.02985	-.00207	-.00102	.85160	-.02858	-.02849	-.02772
400.630	750.040	.04360	.06773	-.00774	-.03020	-.00203	-.00100	.83756	-.02836	-.02825	-.02750
400.560	800.150	.04377	.06771	-.00773	-.03014	-.00202	-.00101	.83669	-.02823	-.02812	-.02733
	GRADIENT	.00000	.00000	.00000	.00000	.00000	.00000	.00000	.00000	.00000	.00000

AEDC VA422(IA17) ORB AND ET SEPARATING(ORB DATA) (RTR023) (24 JUL 75)

REFERENCE DATA

SREF = 2690.0000 SQ.FT. XMRP = 1089.6000 IN. XO
LREF = 1290.3000 IN. YMRP = .0000 IN. YO
BREF = 1290.3000 IN. ZMRP = 375.0000 IN. ZO
SCALE = .0100

PARAMETRIC DATA

DLT-Y = .000 ALPHA = 5.000
BETA = 3.000 DLTALF = -15.000
DLTBTA = .000 MACH = 5.930
AILRON = .000 ELEVON = .000
GRID = 4.000

RUN NO. 173/ 0 GRADIENT INTERVAL = -5.00/ 5.00

DLT-X	DLT-Z	CN	CA	CLM	CY	CYN	CBL	XCP/L	CPB1	CPB2	CPBC
.561	504.150	.33410	.07966	-.02798	-.03963	-.00038	-.00650	.74374	-.02647	-.02653	-.02539
.578	604.660	.24247	.06716	-.03334	-.03002	-.00196	-.00228	.79749	-.02669	-.02673	-.02561
.628	750.680	.07172	.06437	-.01473	-.02983	-.00205	-.00082	.86542	-.02695	-.02697	-.02594
.515	799.940	.04993	.06607	-.00991	-.02982	-.00211	-.00102	.85850	-.02716	-.02712	-.02611
	GRADIENT	.00000	.00000	.00000	.00000	.00000	.00000	.00000	.00000	.00000	.00000

RUN NO. 174/ 0 GRADIENT INTERVAL = -5.00/ 5.00

DLT-X	DLT-Z	CN	CA	CLM	CY	CYN	CBL	XCP/L	CPB1	CPB2	CPBC
200.520	500.340	.32253	.07016	-.04647	-.03400	-.00128	-.00452	.80407	-.02798	-.02784	-.02702
200.590	596.210	.15071	.06539	-.02611	-.03021	-.00177	-.00227	.83325	-.02780	-.02768	-.02677
200.520	748.210	.04583	.06700	-.00860	-.03001	-.00208	-.00098	.84763	-.02734	-.02721	-.02625
200.560	800.220	.04387	.06785	-.00781	-.03013	-.00205	-.00100	.83809	-.02708	-.02696	-.02596
	GRADIENT	.00000	.00000	.00000	.00000	.00000	.00000	.00000	.00000	.00000	.00000

RUN NO. 175/ 0 GRADIENT INTERVAL = -5.00/ 5.00

DLT-X	DLT-Z	CN	CA	CLM	CY	CYN	CBL	XCP/L	CPB1	CPB2	CPBC
400.510	502.490	.17351	.06299	-.02831	-.03049	-.00168	-.00330	.82316	-.02711	-.02710	-.02608
400.610	600.590	.07701	.06431	-.01602	-.02988	-.00201	-.00086	.86803	-.02726	-.02723	-.02632
400.550	750.010	.04408	.06788	-.00779	-.03022	-.00206	-.00100	.83675	-.02717	-.02708	-.02622
400.500	800.060	.04417	.06828	-.00782	-.03015	-.00204	-.00100	.83699	-.02696	-.02688	-.02596
	GRADIENT	.00000	.00000	.00000	.00000	.00000	.00000	.00000	.00000	.00000	.00000

AEDC VA422(IA17) ORB AND ET SEPARATING(ORB DATA) (RTR025) (24 JUL 75)

REFERENCE DATA

SREF = 2690.0000 SQ.FT. XMRP = 1089.6000 IN. XO
LREF = 1290.3000 IN. YMRP = .0000 IN. YO
BREF = 1290.3000 IN. ZMRP = 375.0000 IN. ZO
SCALE = .0100

PARAMETRIC DATA

DLT-Y = .000 ALPHA = 5.000
BETA = 3.000 DLTALF = -20.000
DLTBTA = .000 MACH = 5.930
AILRON = .000 ELEVON = .000
GRID = 4.000

RUN NO. 180/ 0 GRADIENT INTERVAL = -5.00/ 5.00

DLT-X	DLT-Z	CN	CA	CLM	CY	CYN	CBL	XCP/L	CPB1	CPB2	CPBC
.476	801.250	.15377	.05863	-.03558	-.03007	-.00182	-.00103	.89138	-.02462	-.02474	-.02366
.580	900.180	.05015	.06533	-.00994	-.02962	-.00214	-.00099	.85824	-.02504	-.02517	-.02421
.564	1000.100	.04395	.06714	-.00771	-.03009	-.00209	-.00101	.83545	-.02519	-.02533	-.02442
	GRADIENT	.00000	.00000	.00000	.00000	.00000	.00000	.00000	.00000	.00000	.00000

RUN NO. 176/ 0 GRADIENT INTERVAL = -5.00/ 5.00

DLT-X	DLT-Z	CN	CA	CLM	CY	CYN	CBL	XCP/L	CPB1	CPB2	CPBC
200.530	750.730	.09858	.06073	-.02211	-.02956	-.00202	-.00070	.88425	-.02481	-.02489	-.02375
200.560	800.200	.05733	.06427	-.01209	-.02951	-.00216	-.00095	.87087	-.02524	-.02529	-.02433
200.480	900.220	.04398	.06708	-.00772	-.03007	-.00206	-.00100	.83554	-.02513	-.02518	-.02429
200.610	1000.200	.04438	.06823	-.00780	-.03018	-.00205	-.00101	.83578	-.02462	-.02468	-.02371
	GRADIENT	.00000	.00000	.00000	.00000	.00000	.00000	.00000	.00000	.00000	.00000

RUN NO. 177/ 0 GRADIENT INTERVAL = -5.00/ 5.00

DLT-X	DLT-Z	CN	CA	CLM	CY	CYN	CBL	XCP/L	CPB1	CPB2	CPBC
400.570	749.660	.04749	.06614	-.00907	-.02973	-.00212	-.00103	.85101	-.02306	-.02330	-.02179
400.600	800.340	.04408	.06744	-.00775	-.03011	-.00207	-.00101	.83570	-.02279	-.02306	-.02163
400.660	900.320	.04434	.06824	-.00780	-.03016	-.00206	-.00101	.83584	-.02291	-.02317	-.02187
400.690	1000.400	.04434	.06827	-.00779	-.03011	-.00206	-.00101	.83572	-.02343	-.02365	-.02256
	GRADIENT	.00000	.00000	.00000	.00000	.00000	.00000	.00000	.00000	.00000	.00000

ORIGINAL PAGE IS OF POOR QUALITY

AEDC VA422(IA17) ORB AND ET SEPARATING(ORB DATA) (RTR026) (24 JUL 75)

REFERENCE DATA

SREF = 2690.0000 SQ.FT. XMRP = 1089.6000 IN. XO
LREF = 1290.3000 IN. YMRP = .0000 IN. YO
BREF = 1290.3000 IN. ZMRP = 375.0000 IN. ZO
SCALE = .0100

PARAMETRIC DATA

DLT-Y = .000 ALPHA = -5.000
BETA = .000 DLTALF = .000
DLTBTA = .000 MACH = 5.930
AILRON = .000 ELEVON = .000
GRID = 6.000

RUN NO. 239/ 0 GRADIENT INTERVAL = -5.00/ 5.00

DLT-X	DLT-Z	CN	CA	CLM	CY	CYN	CBL	XCP/L	CPB1	CPB2	CPBC
.586	19.272	-.06976	.10103	-.00951	.00271	-.00017	.00009	.52371	-.02857	-.02751	-.02695
.594	101.620	-.04731	.09919	-.00593	.00181	.00021	.00028	.53474	-.02889	-.02783	-.02734
.573	201.870	-.06184	.09556	-.01062	.00234	.00003	-.00001	.48834	-.02912	-.02803	-.02765
.505	301.450	-.09159	.08830	-.01701	.00226	.00002	-.00000	.47425	-.02927	-.02818	-.02787
.538	400.210	-.12812	.08724	-.01657	.00229	.00001	.00001	.53069	-.02944	-.02834	-.02809
.543	500.220	-.13853	.08811	-.01406	.00229	.00001	-.00000	.55847	-.02955	-.02845	-.02825
.567	600.150	-.13859	.08844	-.01408	.00228	.00002	.00000	.55844	-.02958	-.02846	-.02832
	GRADIENT	.00000	.00000	.00000	.00000	.00000	.00000	.00000	.00000	.00000	.00000

RUN NO. 240/ 0 GRADIENT INTERVAL = -5.00/ 5.00

DLT-X	DLT-Z	CN	CA	CLM	CY	CYN	CBL	XCP/L	CPB1	CPB2	CPBC
200.520	23.112	-.03491	.10502	.00147	.00381	.00019	.00053	.70224	-.02967	-.02850	-.02807
200.640	98.157	-.05208	.09202	-.00369	.00155	-.00001	-.00012	.58923	-.02979	-.02858	-.02809
200.460	198.620	-.05617	.09249	-.01427	.00243	-.00005	.00005	.40586	-.02949	-.02817	-.02744
200.490	297.890	-.10398	.08760	-.01814	.00210	-.00001	-.00002	.48558	-.02912	-.02781	-.02706
200.540	399.540	-.13366	.08737	-.01537	.00222	.00001	.00000	.54497	-.02886	-.02757	-.02683
200.630	500.160	-.13842	.08832	-.01404	.00219	.00001	-.00000	.55858	-.02870	-.02743	-.02667
200.640	600.070	-.13845	.08839	-.01404	.00221	.00001	-.00000	.55857	-.02852	-.02738	-.02668
	GRADIENT	.00000	.00000	.00000	.00000	.00000	.00000	.00000	.00000	.00000	.00000

RUN NO. 241/ 0 GRADIENT INTERVAL = -5.00/ 5.00

DLT-X	DLT-Z	CN	CA	CLM	CY	CYN	CBL	XCP/L	CPB1	CPB2	CPBC
400.660	23.322	-.01407	.09390	.00513	.00256	.00015	.00037	1.02410	-.02819	-.02716	-.02638
400.500	102.730	-.03797	.09590	-.00822	.00213	.00002	-.00002	.44354	-.02842	-.02737	-.02668
400.420	202.240	-.07384	.08908	-.01658	.00218	.00001	-.00001	.43543	-.02852	-.02747	-.02678
400.540	300.330	-.11832	.08709	-.01813	.00219	-.00001	-.00001	.50677	-.02864	-.02756	-.02692
400.430	400.130	-.13829	.08787	-.01414	.00211	.00000	-.00001	.55778	-.02875	-.02762	-.02702
400.530	500.130	-.13861	.08846	-.01405	.00208	-.00001	-.00000	.55863	-.02873	-.02758	-.02696
400.450	600.130	-.13865	.08848	-.01405	.00215	.00000	-.00000	.55867	-.02866	-.02750	-.02686
	GRADIENT	.00000	.00000	.00000	.00000	.00000	.00000	.00000	.00000	.00000	.00000

AEDC VA422(IA17) ORB AND ET SEPARATING(ORB DATA) (RTR027) (24 JUL 75)

REFERENCE DATA

SREF = 2690.0000 SQ.FT. XMRP = 1089.6000 IN. XO
LREF = 1290.3000 IN. YMRP = .0000 IN. YO
BREF = 1290.3000 IN. ZMRP = 375.0000 IN. ZO
SCALE = .0100

PARAMETRIC DATA

DLT-Y = .000 ALPHA = -5.000
BETA = .000 DLTALF = -5.000
DLTBTA = .000 MACH = 5.930
AILRON = .000 ELEVON = .000
GRID = 6.000

RUN NO. 245/ 0 GRADIENT INTERVAL = -5.00/ 5.00

DLT-X	DLT-Z	CN	CA	CLM	CY	CYN	CBL	XCP/L	CPB1	CPB2	CPBC
.480	204.150	.07432	.09442	-.01793	.00247	-.00004	.00091	.90126	-.02772	-.02671	-.02588
.497	303.020	-.02442	.09018	-.02126	.00234	-.00008	.00005	-.21081	-.02812	-.02713	-.02646
.447	400.830	-.10088	.08702	-.01987	.00198	-.00003	-.00007	.48305	-.02831	-.02732	-.02676
.585	500.340	-.13532	.08787	-.01494	.00220	.00000	-.00001	.54958	-.02839	-.02742	-.02691
.158	598.280	-.13870	.08871	-.01403	.00212	.00000	-.00001	.55888	-.02830	-.02734	-.02682
	GRADIENT	.00000	.00000	.00000	.00000	.00000	.00000	.00000	.00000	.00000	.00000

RUN NO. 246/ 0 GRADIENT INTERVAL = -5.00/ 5.00

DLT-X	DLT-Z	CN	CA	CLM	CY	CYN	CBL	XCP/L	CPB1	CPB2	CPBC
200.430	198.170	.02680	.09206	-.02244	.00226	-.00010	.00030	1.49720	-.02740	-.02626	-.02547
200.500	297.350	-.05747	.08867	-.01897	.00204	-.00001	-.00003	.32995	-.02694	-.02581	-.02483
200.480	397.970	-.11576	.08753	-.01894	.00217	-.00000	-.00001	.49635	-.02634	-.02522	-.02438
200.520	500.010	-.13778	.08875	-.01415	.00196	-.00002	-.00001	.55730	-.02605	-.02499	-.02394
200.580	600.140	-.13799	.08920	-.01414	.00208	-.00001	-.00000	.55755	-.02598	-.02498	-.02403
	GRADIENT	.00000	.00000	.00000	.00000	.00000	.00000	.00000	.00000	.00000	.00000

AEDC VA422(IA17) ORB AND ET SEPARATING(ORB DATA) (RTR028) (24 JUL 75)

REFERENCE DATA

SREF = 2690.0000 SQ.FT. XMRP = 1089.6000 IN. XO
LREF = 1290.3000 IN. YMRP = .0000 IN. YO
BREF = 1290.3000 IN. ZMRP = 375.0000 IN. ZO
SCALE = .0100

PARAMETRIC DATA

DLT-Y = .000 ALPHA = -5.000
BETA = .000 DLTALF = -10.000
DLTBTA = .000 MACH = 5.930
AILRON = .000 ELEVON = .000
GRID = 6.000

RUN NO. 247/ 0 GRADIENT INTERVAL = -5.00/ 5.00

DLT-X	DLT-Z	CN	CA	CLM	CY	CYN	CBL	XCP/L	CPB1	CPB2	CPBC
.503	404.250	.05706	.08534	-.04060	.00258	-.00009	.00023	1.37160	-.02659	-.02580	-.02466
.535	500.910	-.08542	.08264	-.02725	.00228	-.00007	.00009	.34095	-.02781	-.02695	-.02616
.441	600.360	-.13663	.08769	-.01449	.00206	-.00001	-.00001	.55399	-.02824	-.02734	-.02675
.416	750.230	-.13822	.08920	-.01412	.00217	-.00000	-.00001	.55784	-.02829	-.02738	-.02688
.208	800.930	-.13831	.08924	-.01412	.00204	-.00001	-.00001	.55790	-.02818	-.02727	-.02677
	GRADIENT	.00000	.00000	.00000	.00000	.00000	.00000	.00000	.00000	.00000	.00000

AEDC VA422(IA17) ORB AND ET SEPARATING(ORB DATA) (RTR028) (24 JUL 75)

REFERENCE DATA

SREF = 2690.0000 SQ.FT. XMRP = 1089.6000 IN. XO
LREF = 1290.3000 IN. YMRP = .0000 IN. YO
BREF = 1290.3000 IN. ZMRP = 375.0000 IN. ZO
SCALE = .0100

PARAMETRIC DATA

DLT-Y = .000 ALPHA = -5.000
BETA = .000 DLTALF = -10.000
DLTBTA = .000 MACH = 5.930
AILRON = .000 ELEVON = .000
GRID = 6.000

RUN NO. 248/ 0 GRADIENT INTERVAL = -5.00/ 5.00

DLT-X	DLT-Z	CN	CA	CLM	CY	CYN	CBL	XCP/L	CPB1	CPB2	CPBC
200.570	397.890	-.03358	.08223	-.03229	.00231	-.00009	.00007	-.30136	-.02539	-.02472	-.02341
200.400	498.550	-.12089	.08561	-.01875	.00207	-.00002	-.00001	.50489	-.02398	-.02345	-.02150
200.470	600.060	-.13753	.08875	-.01414	.00201	-.00001	-.00001	.55718	-.02265	-.02218	-.02023
200.410	750.150	-.13777	.08927	-.01414	.00201	-.00002	-.00001	.55737	-.02291	-.02244	-.02113
200.430	800.180	-.13777	.08927	-.01412	.00206	-.00002	-.00001	.55755	-.02348	-.02301	-.02188
	GRADIENT	.00000	.00000	.00000	.00000	.00000	.00000	.00000	.00000	.00000	.00000

RUN NO. 249/ 0 GRADIENT INTERVAL = -5.00/ 5.00

DLT-X	DLT-Z	CN	CA	CLM	CY	CYN	CBL	XCP/L	CPB1	CPB2	CPBC
400.530	401.160	-.09165	.08521	-.02348	.00198	-.00003	-.00009	.40392	-.02613	-.02544	-.02469
400.480	500.630	-.13414	.08760	-.01524	.00204	-.00002	-.00002	.54641	-.02618	-.02553	-.02491
400.540	600.120	-.13783	.08917	-.01411	.00205	-.00002	-.00001	.55760	-.02586	-.02525	-.02462
400.470	750.220	-.13806	.08931	-.01412	.00216	-.00001	-.00001	.55775	-.02519	-.02462	-.02388
400.490	800.140	-.13822	.08934	-.01414	.00205	-.00002	-.00001	.55768	-.02481	-.02426	-.02346
	GRADIENT	.00000	.00000	.00000	.00000	.00000	.00000	.00000	.00000	.00000	.00000

AEDC VA422(IA17) ORB AND ET SEPARATING(ORB DATA) (RTR029) (24 JUL 75)

REFERENCE DATA

SREF = 2690.0000 SQ.FT. XMRP = 1089.6000 IN. XO
LREF = 1290.3000 IN. YMRP = .0000 IN. YO
BREF = 1290.3000 IN. ZMRP = 375.0000 IN. ZO
SCALE = .0100

PARAMETRIC DATA

DLT-Y = .000 ALPHA = -5.000
BETA = .000 DLTALF = -15.000
DLTBTA = .000 MACH = 5.930
AILRON = .000 ELEVON = .000
GRID = 6.000

RUN NO. 253/ 0 GRADIENT INTERVAL = -5.00/ 5.00

DLT-X	DLT-Z	CN	CA	CLM	CY	CYN	CBL	XCP/L	CPB1	CPB2	CPBC
.456	500.380	.17672	.09070	-.04692	.00287	-.00014	.00071	.92550	-.02254	-.02200	-.02086
.485	604.690	.07218	.08191	-.04633	.00289	-.00022	.00069	1.30180	-.02274	-.02219	-.02082
.446	750.470	-.12913	.08548	-.01654	.00210	-.00003	.00008	.53194	-.02478	-.02415	-.02325
.723	804.130	-.13746	.08731	-.01413	.00191	-.00003	-.00001	.55720	-.02542	-.02478	-.02413
	GRADIENT	.00000	.00000	.00000	.00000	.00000	.00000	.00000	.00000	.00000	.00000

AEDC VA422(IA17) ORB AND ET SEPARATING(ORB DATA) (RTR029) (24 JUL 75)

REFERENCE DATA

SREF = 2690.0000 SQ.FT. XMRP = 1089.6000 IN. XO
LREF = 1290.3000 IN. YMRP = .0000 IN. YO
BREF = 1290.3000 IN. ZMRP = 375.0000 IN. ZO
SCALE = .0100

PARAMETRIC DATA

DLT-Y = .000 ALPHA = -5.000
BETA = .000 DLTALF = -15.000
DLTBTA = .000 MACH = 5.930
AILRON = .000 ELEVON = .000
GRID = 6.000

RUN NO. 254/ 0 GRADIENT INTERVAL = -5.00/ 5.00

DLT-X	DLT-Z	CN	CA	CLM	CY	CYN	CBL	XCP/L	CPB1	CPB2	CPBC
200.450	500.370	.07029	.07888	-.05711	.00320	-.00026	.00082	1.47250	-.02472	-.02414	-.02328
200.270	597.310	-.05829	.07792	-.03754	.00266	-.00011	.00070	.01605	-.02439	-.02378	-.02261
200.430	749.810	-.13719	.08710	-.01426	.00204	-.00002	-.00001	.55607	-.02036	-.02011	-.01764
200.400	800.280	-.13739	.08833	-.01415	.00197	-.00003	-.00001	.55698	-.01932	-.01906	-.01692
	GRADIENT	.00000	.00000	.00000	.00000	.00000	.00000	.00000	.00000	.00000	.00000

RUN NO. 255/ 0 GRADIENT INTERVAL = -5.00/ 5.00

DLT-X	DLT-Z	CN	CA	CLM	CY	CYN	CBL	XCP/L	CPB1	CPB2	CPBC
400.420	501.320	-.07005	.07948	-.03121	.00232	-.00009	.00008	.21440	-.01637	-.01635	-.01431
400.450	600.620	-.13464	.08469	-.01492	.00188	-.00005	-.00001	.54918	-.01926	-.01910	-.01743
400.370	750.250	-.13707	.08769	-.01414	.00204	-.00003	-.00001	.55685	-.02092	-.02066	-.01963
400.380	800.350	-.13724	.08949	-.01413	.00180	-.00004	-.00001	.55706	-.02012	-.01988	-.01865
	GRADIENT	.00000	.00000	.00000	.00000	.00000	.00000	.00000	.00000	.00000	.00000

AEDC VA422(IA17) ORB AND ET SEPARATING(ORB DATA) (RTR031) (24 JUL 75)

REFERENCE DATA

SREF = 2690.0000 SQ.FT. XMRP = 1089.6000 IN. XO
LREF = 1290.3000 IN. YMRP = .0000 IN. YO
BREF = 1290.3000 IN. ZMRP = 375.0000 IN. ZO
SCALE = .0100

PARAMETRIC DATA

DLT-Y = .000 ALPHA = -5.000
BETA = .000 DLTALF = -20.000
DLTBTA = .000 MACH = 5.930
AILRON = .000 ELEVON = .000
GRID = 6.000

RUN NO. 260/ 0 GRADIENT INTERVAL = -5.00/ 5.00

DLT-X	DLT-Z	CN	CA	CLM	CY	CYN	CBL	XCP/L	CPB1	CPB2	CPBC
.470	804.590	.06704	.08240	-.04354	.00311	-.00032	.00108	1.30540	-.01495	-.01472	-.01421
.492	900.850	-.09038	.08261	-.02652	.00204	-.00009	-.00005	.36660	-.01488	-.01460	-.01442
.432	1000.400	-.13701	.08742	-.01419	.00182	-.00006	-.00001	.55641	-.01462	-.01431	-.01440
	GRADIENT	.00000	.00000	.00000	.00000	.00000	.00000	.00000	.00000	.00000	.00000

ORIGINAL PAGE IS OF POOR QUALITY

AEDC VA422(IA17) ORB AND ET SEPARATING(ORB DATA) (RTR031) (24 JUL 75)

REFERENCE DATA

SREF = 2690.0000 SQ.FT. XMRP = 1089.6000 IN. XO
LREF = 1290.3000 IN. YMRP = .0000 IN. YO
BREF = 1290.3000 IN. ZMRP = 375.0000 IN. ZO
SCALE = .0100

PARAMETRIC DATA

DLT-Y = .000 ALPHA = -5.000
BETA = .000 DLTALF = -20.000
DLTBTA = .000 MACH = 5.930
AILRON = .000 ELEVON = .000
GRID = 8.000

RUN NO. 256/ 0 GRADIENT INTERVAL = -5.00/ 5.00

DLT-X	DLT-Z	CN	CA	CLM	CY	CYN	CBL	XCP/L	CPB1	CPB2	CPBC
200.480	753.680	.11487	.07397	-.05360	.00238	-.00024	.00024	1.12660	-.00384	-.00997	-.00845
200.420	802.350	-.01676	.07693	-.03800	.00266	-.00025	-.00051	-1.60770	-.01028	-.01025	-.00921
200.470	900.350	-.13392	.08512	-.01501	.00197	-.00004	-.00000	.54793	-.01054	-.01034	-.00973
200.530	1000.400	-.13702	.08791	-.01414	.00196	-.00004	-.00001	.55680	-.00889	-.00864	-.00786
	GRADIENT	.00000	.00000	.00000	.00000	.00000	.00000	.00000	.00000	.00000	.00000

RUN NO. 257/ 0 GRADIENT INTERVAL = -5.00/ 5.00

DLT-X	DLT-Z	CN	CA	CLM	CY	CYN	CBL	XCP/L	CPB1	CPB2	CPBC
400.450	747.020	-.04396	.07507	-.02930	.00234	-.00011	.00004	-.00642	-.00801	-.00852	-.00474
400.400	798.680	-.12918	.08205	-.01579	.00214	-.00004	.00002	.53777	-.00397	-.00490	-.00019
400.500	900.180	-.13663	.08600	-.01435	.00203	-.00004	-.00001	.55494	-.00204	-.00274	.00097
400.420	1000.400	-.13717	.08962	-.01415	.00190	-.00004	-.00001	.55688	-.00407	-.00443	-.00214
	GRADIENT	.00000	.00000	.00000	.00000	.00000	.00000	.00000	.00000	.00000	.00000

AEDC VA422(IA17) ORB AND ET SEPARATING(ORB DATA) (RTR032) (24 JUL 75)

REFERENCE DATA

SREF = 2690.0000 SQ.FT. XMRP = 1089.6000 IN. XO
LREF = 1290.3000 IN. YMRP = .0000 IN. YO
BREF = 1290.3000 IN. ZMRP = 375.0000 IN. ZO
SCALE = .0100

PARAMETRIC DATA

DLT-Y = .000 ALPHA = -5.000
BETA = 3.000 DLTALF = .000
DLTBTA = .000 MACH = 5.930
AILRON = .000 ELEVON = .000
GRID = 7.000

RUN NO. 279/ 0 GRADIENT INTERVAL = -5.00/ 5.00

DLT-X	DLT-Z	CN	CA	CLM	CY	CYN	CBL	XCP/L	CPB1	CPB2	CPBC
.605	19.325	-.06495	.10343	-.01009	-.04527	-.00138	-.00033	.50470	-.02730	-.02719	-.02639
.688	101.600	-.04706	.10052	-.00590	-.04485	-.00145	-.00039	.53463	-.02763	-.02754	-.02677
.622	202.090	-.06149	.09508	-.01111	-.03824	-.00094	.00002	.47931	-.02790	-.02780	-.02712
.555	301.200	-.09532	.08856	-.01738	-.03821	-.00100	.00146	.47761	-.02807	-.02795	-.02731
.599	400.230	-.13137	.08774	-.01622	-.03889	-.00103	.00086	.53650	-.02817	-.02805	-.02746
.710	500.230	-.13980	.08870	-.01412	-.03910	-.00097	.00070	.55901	-.02815	-.02804	-.02749
.683	600.220	-.13997	.08893	-.01414	-.03925	-.00098	.00070	.55895	-.02810	-.02798	-.02745
	GRADIENT	.00000	.00000	.00000	.00000	.00000	.00000	.00000	.00000	.00000	.00000

AEDC VA422(IA17) ORB AND ET SEPARATING(ORB DATA) (RTR032) (24 JUL 75)

REFERENCE DATA

SREF = 2690.0000 SQ.FT. XMRP = 1089.6000 IN. XO
LREF = 1290.3000 IN. YMRP = .0000 IN. YO
BREF = 1290.3000 IN. ZMRP = 375.0000 IN. ZO
SCALE = .0100

PARAMETRIC DATA

DLT-Y = .000 ALPHA = -5.000
BETA = 3.000 DLTALF = .000
DLTBTA = .000 MACH = 5.930
AILRON = .000 ELEVON = .000
GRID = 7.000

RUN NO. 280/ 0 GRADIENT INTERVAL = -5.00/ 5.00

DLT-X	DLT-Z	CN	CA	CLM	CY	CYN	CBL	XCP/L	CPB1	CPB2	CPBC
200.520	23.161	-.03422	.10703	.00113	-.04610	-.00204	-.00067	.69313	-.02863	-.02813	-.02767
200.580	98.150	-.05222	.09353	-.00373	-.04156	-.00068	-.00040	.58854	-.02880	-.02823	-.02771
200.660	198.440	-.05882	.09213	-.01457	-.03664	-.00137	.00097	.41222	-.02848	-.02796	-.02715
200.550	297.870	-.10724	.08902	-.01626	-.03960	-.00099	.00116	.48970	-.02808	-.02749	-.02677
200.560	399.650	-.13641	.08904	-.01511	-.03918	-.00102	.00080	.54926	-.02780	-.02726	-.02654
200.540	500.180	-.13963	.08894	-.01413	-.03930	-.00100	.00070	.55880	-.02763	-.02715	-.02640
200.580	600.150	-.13966	.08894	-.01413	-.03927	-.00099	.00070	.55884	-.02757	-.02713	-.02642
	GRADIENT	.00000	.00000	.00000	.00000	.00000	.00000	.00000	.00000	.00000	.00000

AEDC VA422(IA17) ORB AND ET SEPARATING(ORB DATA) (RTR033) (24 JUL 75)

REFERENCE DATA

SREF = 2690.0000 SQ.FT. XMRP = 1089.6000 IN. XO
LREF = 1290.3000 IN. YMRP = .0000 IN. YO
BREF = 1290.3000 IN. ZMRP = 375.0000 IN. ZO
SCALE = .0100

PARAMETRIC DATA

DLT-Y = .000 ALPHA = -5.000
BETA = 3.000 DLTALF = -5.000
DLTBTA = .000 MACH = 5.930
AILRON = .000 ELEVON = .000
GRID = 7.000

RUN NO. 283/ 0 GRADIENT INTERVAL = -5.00/ 5.00

DLT-X	DLT-Z	CN	CA	CLM	CY	CYN	CBL	XCP/L	CPB1	CPB2	CPBC
.494	204.030	.06338	.09497	-.01875	-.03998	-.00075	.00053	.95585	-.02690	-.02673	-.02576
.558	302.750	-.03150	.08916	-.02154	-.03509	-.00163	.00204	-.02383	-.02745	-.02724	-.02644
.656	400.770	-.10489	.08733	-.01987	-.03656	-.00107	.00125	.47059	-.02774	-.02751	-.02678
.608	500.380	-.13759	.08813	-.01478	-.03914	-.00102	.00078	.55260	-.02780	-.02757	-.02692
.252	598.120	-.13983	.08916	-.01413	-.03924	-.00100	.00070	.55893	-.02773	-.02750	-.02683
	GRADIENT	.00000	.00000	.00000	.00000	.00000	.00000	.00000	.00000	.00000	.00000

RUN NO. 284/ 0 GRADIENT INTERVAL = -5.00/ 5.00

DLT-X	DLT-Z	CN	CA	CLM	CY	CYN	CBL	XCP/L	CPB1	CPB2	CPBC
200.560	198.610	.02490	.09178	-.02275	-.03799	-.00097	.00034	1.57360	-.02655	-.02636	-.02540
200.570	297.160	-.06156	.08835	-.01940	-.03746	-.00117	.00215	.34497	-.02607	-.02585	-.02471
200.470	398.070	-.11928	.08749	-.01861	-.03899	-.00110	.00101	.50394	-.02538	-.02519	-.02395
200.660	499.970	-.13928	.08882	-.01416	-.03923	-.00101	.00069	.55830	-.02505	-.02488	-.02374
200.680	600.200	-.13941	.08934	-.01418	-.03924	-.00101	.00069	.55831	-.02508	-.02490	-.02388
	GRADIENT	.00000	.00000	.00000	.00000	.00000	.00000	.00000	.00000	.00000	.00000

AEDC VA422(IA17) ORB AND ET SEPARATING(ORB DATA) (RTR034) (24 JUL 75)

REFERENCE DATA

SREF = 2690.0000 SQ.FT. XMRP = 1089.6000 IN. XO
LREF = 1290.3000 IN. YMRP = .0000 IN. YO
BREF = 1290.3000 IN. ZMRP = 375.0000 IN. ZO
SCALE = .0100

PARAMETRIC DATA

DLT-Y = .000 ALPHA = -5.000
BETA = 3.000 DLTALF = -10.000
DLTBTA = .000 MACH = 5.930
AILRON = .000 ELEVON = .000
GRID = 7.000

RUN NO. 285/ 0 GRADIENT INTERVAL = -5.00/ 5.00

DLT-X	DLT-Z	CN	CA	CLM	CY	CYN	CBL	XCP/L	CPB1	CPB2	CPBC
.470	404.110	.05371	.08492	-.04215	-.03808	-.00130	.00302	1.44470	-.02662	-.02553	-.02415
.500	500.050	-.09064	.08275	-.02650	-.03923	-.00124	.00143	.36702	-.02685	-.02570	-.02578
.530	600.300	-.13841	.08769	-.01443	-.03914	-.00104	.00074	.55575	-.02746	-.02731	-.02657
.487	750.210	-.13954	.08937	-.01415	-.03919	-.00101	.00069	.55658	-.02751	-.02736	-.02673
.251	800.070	-.13968	.08943	-.01416	-.03929	-.00101	.00069	.55865	-.02735	-.02719	-.02657
	GRADIENT	.00000	.00000	.00000	.00000	.00000	.00000	.00000	.00000	.00000	.00000

RUN NO. 286/ 0 GRADIENT INTERVAL = -5.00/ 5.00

DLT-X	DLT-Z	CN	CA	CLM	CY	CYN	CBL	XCP/L	CPB1	CPB2	CPBC
200.470	398.040	-.03733	.08253	-.03251	-.03730	-.00127	.00221	-.21098	-.02403	-.02389	-.02258
200.420	498.500	-.12418	.08592	-.01820	-.03824	-.00112	.00086	.51345	-.02245	-.02244	-.02063
200.600	600.160	-.13880	.08903	-.01424	-.03923	-.00103	.00069	.55744	-.02110	-.02118	-.01936
200.480	750.180	-.13909	.08971	-.01425	-.03926	-.00102	.00070	.55754	-.02163	-.02165	-.02045
200.490	800.170	-.13913	.08969	-.01424	-.03924	-.00102	.00069	.55763	-.02235	-.02234	-.02132
	GRADIENT	.00000	.00000	.00000	.00000	.00000	.00000	.00000	.00000	.00000	.00000

RUN NO. 287/ 0 GRADIENT INTERVAL = -5.00/ 5.00

DLT-X	DLT-Z	CN	CA	CLM	CY	CYN	CBL	XCP/L	CPB1	CPB2	CPBC
400.470	401.070	-.09444	.08517	-.02318	-.03860	-.00116	.00119	.41455	-.02542	-.02536	-.02459
400.440	500.580	-.13613	.08804	-.01510	-.03919	-.00105	.00077	.54911	-.02549	-.02541	-.02479
400.550	600.180	-.13924	.08960	-.01423	-.03917	-.00103	.00069	.55783	-.02512	-.02504	-.02445
400.600	750.170	-.13952	.08978	-.01425	-.03930	-.00102	.00069	.55787	-.02436	-.02429	-.02361
400.560	800.180	-.13940	.08974	-.01424	-.03930	-.00102	.00069	.55781	-.02388	-.02383	-.02310
	GRADIENT	.00000	.00000	.00000	.00000	.00000	.00000	.00000	.00000	.00000	.00000

AEDC VA422(IA17) ORB AND ET SEPARATING(ORB DATA) (RTR035) (24 JUL 75)

REFERENCE DATA

SREF = 2680.0000 SQ.FT. XMRP = 1089.8000 IN. XO
LREF = 1290.3000 IN. YMRP = .0000 IN. YO
BREF = 1290.3000 IN. ZMRP = 375.0000 IN. ZO
SCALE = .0100

PARAMETRIC DATA

DLT-Y = .000 ALPHA = -5.000
BETA = 3.000 DLTALF = -15.000
DLTBTA = .000 MACH = 5.930
AILRON = .000 ELEVON = .000
GRID = 7.000

RUN NO. 291/ 0 GRADIENT INTERVAL = -5.00/ 5.00

DLT-X	DLT-Z	CN	CA	CLM	CY	CYN	CBL	XCP/L	CPB1	CPB2	CPBC
.447	500.290	.19894	.09170	-.04920	-.03465	-.00141	.00441	.90983	-.02193	-.02204	-.02093
.495	604.150	.05603	.08178	-.04648	-.03512	-.00132	.00308	1.48960	-.02212	-.02228	-.02086
.515	750.440	-.13086	.08593	-.01647	-.03912	-.00106	.00077	.53411	-.02426	-.02423	-.02325
.875	804.040	-.13880	.08777	-.01430	-.03916	-.00105	.00067	.55701	-.02487	-.02482	-.02408
	GRADIENT	.00000	.00000	.00000	.00000	.00000	.00000	.00000	.00000	.00000	.00000

RUN NO. 292/ 0 GRADIENT INTERVAL = -5.00/ 5.00

DLT-X	DLT-Z	CN	CA	CLM	CY	CYN	CBL	XCP/L	CPB1	CPB2	CPBC
200.540	500.530	.08515	.07827	-.06194	-.03669	-.00128	.00330	1.38740	-.02418	-.02395	-.02325
200.420	597.530	-.05334	.07827	-.03749	-.03818	-.00137	.00117	-.04277	-.02371	-.02355	-.02256
200.500	749.570	-.13935	.08772	-.01442	-.03923	-.00105	.00066	.55577	-.01989	-.02002	-.01811
200.450	800.260	-.13877	.08865	-.01425	-.03923	-.00105	.00069	.55728	-.01904	-.01918	-.01743
	GRADIENT	.00000	.00000	.00000	.00000	.00000	.00000	.00000	.00000	.00000	.00000

RUN NO. 293/ 0 GRADIENT INTERVAL = -5.00/ 5.00

DLT-X	DLT-Z	CN	CA	CLM	CY	CYN	CBL	XCP/L	CPB1	CPB2	CPBC
400.470	501.260	-.07210	.07953	-.03144	-.03787	-.00131	.00133	.22389	-.01629	-.01679	-.01464
400.550	600.550	-.13564	.08472	-.01506	-.03907	-.00109	.00066	.54896	-.01943	-.01964	-.01814
400.420	750.320	-.13863	.08836	-.01422	-.03925	-.00107	.00068	.55745	-.02072	-.02075	-.01987
400.430	800.290	-.13866	.08986	-.01425	-.03923	-.00106	.00069	.55725	-.01990	-.01999	-.01891
	GRADIENT	.00000	.00000	.00000	.00000	.00000	.00000	.00000	.00000	.00000	.00000

AEDC VA422(IA17) ORB AND ET SEPARATING(ORB DATA) (RTR037) (24 JUL 75)

REFERENCE DATA

SREF = 2690.0000 SQ.FT. XMRP = 1089.6000 IN. XO
LREF = 1290.3000 IN. YMRP = .0000 IN. YO
BREF = 1290.3000 IN. ZMRP = 375.0000 IN. ZO
SCALE = .0100

PARAMETRIC DATA

DLT-Y = .000 ALPHA = -5.000
BETA = 3.000 DLTALF = -20.000
DLTBTA = .000 MACH = 5.930
AILRON = .000 ELEVON = .000
GRID = 7.000

RUN NO. 298/ 0 GRADIENT INTERVAL = -5.00/ 5.00

DLT-X	DLT-Z	CN	CA	CLM	CY	CYN	CBL	XCP/L	CPB1	CPB2	CPBC
.489	804.110	.05554	.08227	-.04311	-.03358	-.00122	.00387	1.43630	-.01382	-.01416	-.01353
.491	900.920	-.08699	.08280	-.02704	-.03881	-.00126	.00077	.34921	-.01373	-.01401	-.01361
.509	1000.400	-.13816	.08792	-.01438	-.03919	-.00108	.00067	.55593	-.01318	-.01345	-.01320
	GRADIENT	.00000	.00000	.00000	.00000	.00000	.00000	.00000	.00000	.00000	.00000

RUN NO. 294/ 0 GRADIENT INTERVAL = -5.00/ 5.00

DLT-X	DLT-Z	CN	CA	CLM	CY	CYN	CBL	XCP/L	CPB1	CPB2	CPBC
200.370	753.760	.11485	.07339	-.05342	-.03139	.00076	.00255	1.12510	-.01013	-.01061	-.00922
200.420	802.290	-.02505	.07799	-.03675	-.03601	-.00147	.00112	-.80693	-.01067	-.01105	-.00987
200.510	900.410	-.13600	.08578	-.01495	-.03908	-.00108	.00070	.55008	-.01088	-.01124	-.01030
200.500	1000.400	-.13860	.08824	-.01424	-.03913	-.00107	.00068	.55727	-.00926	-.00967	-.00853
	GRADIENT	.00000	.00000	.00000	.00000	.00000	.00000	.00000	.00000	.00000	.00000

RUN NO. 295/ 0 GRADIENT INTERVAL = -5.00/ 5.00

DLT-X	DLT-Z	CN	CA	CLM	CY	CYN	CBL	XCP/L	CPB1	CPB2	CPBC
400.450	746.020	-.08291	.07737	-.02482	-.03737	-.00137	.00052	.36062	-.00556	-.00665	-.00321
400.360	799.890	-.12125	.08179	-.01712	-.03924	-.00122	.00030	.51883	-.00093	-.00210	.00164
400.360	900.010	-.13755	.08703	-.01455	-.03920	-.00105	.00062	.55423	.00052	-.00059	.00206
400.490	1000.500	-.13848	.09000	-.01427	-.03931	-.00106	.00069	.55695	-.00249	-.00326	-.00179
	GRADIENT	.00000	.00000	.00000	.00000	.00000	.00000	.00000	.00000	.00000	.00000

AEDC VA422(IA17) ORB AND ET SEPARATING(ORB DATA) (RTR038) (24 JUL 75)

REFERENCE DATA

SREF = 2690.0000 SQ.FT. XMRP = 1089.6000 IN. XO
LREF = 1290.3000 IN. YMRP = .0000 IN. YO
BREF = 1290.3000 IN. ZMRP = 375.0000 IN. ZO
SCALE = .0100

PARAMETRIC DATA

DLT-Y = .000 ALPHA = -10.000
BETA = 3.000 DLTALF = .000
DLTBTA = .000 MACH = 5.930
AILRON = .000 ELEVON = .000
GRID = 8.000

RUN NO. 318/ 0 GRADIENT INTERVAL = -5.00/ 5.00

DLT-X	DLT-Z	CN	CA	CLM	CY	CYN	CBL	XCP/L	CPB1	CPB2	CPBC
.534	31.523	-.08892	.12340	-.00839	-.04913	-.00138	.00061	.56563	-.02227	-.02236	-.02096
.521	102.800	-.10601	.10786	-.01176	-.04458	-.00012	.00179	.54907	-.02326	-.02326	-.02187
.620	202.240	-.15520	.09994	-.01793	-.04267	-.00016	.00276	.54446	-.02454	-.02442	-.02327
.534	300.520	-.19653	.09867	-.02096	-.04389	-.00022	.00217	.55335	-.02530	-.02505	-.02417
.609	400.180	-.21352	.09961	-.01821	-.04440	-.00017	.00179	.57472	-.02561	-.02528	-.02455
.574	500.320	-.21425	.10033	-.01805	-.04451	-.00016	.00184	.57576	-.02561	-.02529	-.02457
	GRADIENT	.00000	.00000	.00000	.00000	.00000	.00000	.00000	.00000	.00000	.00000

RUN NO. 319/ 0 GRADIENT INTERVAL = -5.00/ 5.00

DLT-X	DLT-Z	CN	CA	CLM	CY	CYN	CBL	XCP/L	CPB1	CPB2	CPBC
200.560	31.849	-.07867	.11412	.00050	-.04687	-.00063	.00127	.66637	-.02396	-.02372	-.02261
200.430	100.240	-.11562	.10666	-.00961	-.04383	.00007	.00158	.57686	-.02125	-.02104	-.01923
200.510	197.360	-.16055	.09956	-.01952	-.04304	-.00014	.00261	.53845	-.01964	-.01946	-.01770
200.480	298.500	-.20121	.09833	-.02050	-.04397	-.00023	.00211	.55810	-.01902	-.01894	-.01737
200.550	399.830	-.21367	.09957	-.01809	-.04421	-.00017	.00179	.57535	-.01888	-.01891	-.01746
200.470	500.200	-.21436	.10015	-.01799	-.04435	-.00017	.00183	.57607	-.01924	-.01931	-.01807
	GRADIENT	.00000	.00000	.00000	.00000	.00000	.00000	.00000	.00000	.00000	.00000

AEDC VA422(IA17) ORB AND ET SEPARATING(ORB DATA) (RTR039) (24 JUL 75)

REFERENCE DATA

SREF = 2690.0000 SQ.FT. XMRP = 1089.6000 IN. XO
LREF = 1290.3000 IN. YMRP = .0000 IN. YO
BREF = 1290.3000 IN. ZMRP = 375.0000 IN. ZO
SCALE = .0100

PARAMETRIC DATA

DLT-Y = .000 ALPHA = -10.000
BETA = 3.000 DLTALF = -5.000
DLTBTA = .000 MACH = 5.930
AILRON = .000 ELEVON = .000
GRID = 8.000

RUN NO. 322/ 0 GRADIENT INTERVAL = -5.00/ 5.00

DLT-X	DLT-Z	CN	CA	CLM	CY	CYN	CBL	XCP/L	CPB1	CPB2	CPBC
.433	200.410	-.00374	.10651	-.02684	-.04128	-.00052	.00212	.00000	-.01928	-.01929	-.01809
.501	302.270	-.12402	.09539	-.03050	-.04271	-.00034	.00304	.41409	-.02105	-.02104	-.01963
.454	400.420	-.19714	.09601	-.02161	-.04400	-.00027	.00204	.55041	-.02305	-.02301	-.02214
.437	500.260	-.21238	.09889	-.01834	-.04446	-.00018	.00170	.57363	-.02346	-.02335	-.02279
.527	600.260	-.21437	.10011	-.01798	-.04445	-.00017	.00183	.57613	-.02323	-.02313	-.02258
	GRADIENT	.00000	.00000	.00000	.00000	.00000	.00000	.00000	.00000	.00000	.00000

RUN NO. 323/ 0 GRADIENT INTERVAL = -5.00/ 5.00

DLT-X	DLT-Z	CN	CA	CLM	CY	CYN	CBL	XCP/L	CPB1	CPB2	CPBC
200.430	198.790	-.03640	.09853	-.03149	-.03956	-.00068	.00375	-.20500	-.01985	-.02016	-.01897
200.490	296.640	-.15687	.09748	-.02489	-.04328	-.00025	.00280	.50132	-.01910	-.01938	-.01800
200.440	398.710	-.20427	.09802	-.02038	-.04410	-.00023	.00204	.56022	-.01776	-.01801	-.01650
200.400	499.940	-.21177	.09961	-.01842	-.04444	-.00018	.00169	.57302	-.01724	-.01742	-.01610
200.470	600.190	-.21399	.10057	-.01809	-.04441	-.00018	.00183	.57546	-.01755	-.01775	-.01669
	GRADIENT	.00000	.00000	.00000	.00000	.00000	.00000	.00000	.00000	.00000	.00000

AEDC VA422(IA17) ORB AND ET SEPARATING(ORB DATA) (RTR040) (24 JUL 75)

REFERENCE DATA

SREF = 2690.0000 SQ.FT. XMRP = 1089.6000 IN. XO
LREF = 1290.3000 IN. YMRP = .0000 IN. YO
BREF = 1290.3000 IN. ZMRP = 375.0000 IN. ZO
SCALE = .0100

PARAMETRIC DATA

DLT-Y = .000 ALPHA = -10.000
BETA = 3.000 DLTALF = -10.000
DLTBTA = .000 MACH = 5.930
AILRON = .000 ELEVON = .000
GRID = 8.000

RUN NO. 324/ 0 GRADIENT INTERVAL = -5.00/ 5.00

DLT-X	DLT-Z	CN	CA	CLM	CY	CYN	CBL	XCP/L	CPB1	CPB2	CPBC
.554	403.400	-.01715	.09540	-.04857	-.04201	-.00042	.00403	-2.17290	-.01842	-.01848	-.01695
.414	501.450	-.11313	.09058	-.04114	-.04313	-.00063	.00304	.29635	-.02029	-.02036	-.01887
.381	600.610	-.19631	.09548	-.02148	-.04442	-.00027	.00158	.55058	-.02242	-.02237	-.02154
.473	700.240	-.21162	.09909	-.01851	-.04451	-.00019	.00168	.57253	-.02292	-.02277	-.02230
.581	800.280	-.21413	.10052	-.01806	-.04439	-.00017	.00183	.57564	-.02259	-.02245	-.02201
	GRADIENT	.00000	.00000	.00000	.00000	.00000	.00000	.00000	.00000	.00000	.00000

DATE 25 JUL 75 TABULATED SOURCE DATA - IA17A

AEDC VA422(IA17) ORB AND ET SEPARATING(ORB DATA) (RTR040) (24 JUL 75)

REFERENCE DATA

SREF = 2690.0000 SQ.FT. XMRP = 1089.6000 IN. XO
LREF = 1290.3000 IN. YMRP = .0000 IN. YO
BREF = 1290.3000 IN. ZMRP = 375.0000 IN. ZO
SCALE = .0100

PARAMETRIC DATA

DLT-Y = .000 ALPHA = -10.000
BETA = 3.000 DLTALF = -10.000
DLTBTA = .000 MACH = 5.930
AILRON = .000 ELEVON = .000
GRID = 8.000

RUN NO. 325/ 0 GRADIENT INTERVAL = -5.00/ 5.00

DLT-X	DLT-Z	CN	CA	CLM	CY	CYN	CBL	XCP/L	CPB1	CPB2	CPBC
200.500	398.110	-.10472	.09168	-.04116	-.04253	-.00035	.00350	.26699	-.01707	-.01747	-.01576
200.400	498.750	-.19905	.09522	-.02112	-.04432	-.00028	.00174	.55392	-.01463	-.01518	-.01272
200.350	599.990	-.20802	.09660	-.01893	-.04428	-.00019	.00162	.56902	-.01182	-.01234	-.00952
200.410	700.140	-.21143	.09986	-.01847	-.04442	-.00018	.00168	.57266	-.01075	-.01114	-.00873
200.530	800.280	-.21343	.10060	-.01809	-.04439	-.00018	.00182	.57522	-.01209	-.01238	-.01074
	GRADIENT	.00000	.00000	.00000	.00000	.00000	.00000	.00000	.00000	.00000	.00000

RUN NO. 326/ 0 GRADIENT INTERVAL = -5.00/ 5.00

DLT-X	DLT-Z	CN	CA	CLM	CY	CYN	CBL	XCP/L	CPB1	CPB2	CPBC
400.480	401.260	-.18010	.08413	-.02975	-.04362	-.00043	.00254	.47417	-.01684	-.01686	-.01578
400.500	500.460	-.20802	.09740	-.01911	-.04428	-.00021	.00178	.56815	-.01810	-.01808	-.01727
400.560	600.900	-.20573	.09844	-.01893	-.04464	-.00020	.00143	.56799	-.01831	-.01830	-.01772
400.310	700.430	-.21344	.10037	-.01819	-.04440	-.00019	.00180	.57477	-.01745	-.01742	-.01685
400.470	800.140	-.21376	.10063	-.01810	-.04440	-.00019	.00183	.57535	-.01616	-.01622	-.01547
	GRADIENT	.00000	.00000	.00000	.00000	.00000	.00000	.00000	.00000	.00000	.00000

AEDC VA422(IA17) ORB AND ET SEPARATING(ORB DATA) (RTR041) (24 JUL 75)

REFERENCE DATA

SREF = 2690.0000 SQ.FT. XMRP = 1089.6000 IN. XO
LREF = 1290.3000 IN. YMRP = .0000 IN. YO
BREF = 1290.3000 IN. ZMRP = 375.0000 IN. ZO
SCALE = .0100

PARAMETRIC DATA

DLT-Y = .000 ALPHA = -10.000
BETA = 3.000 DLTALF = -15.000
DLTBTA = .000 MACH = 5.930
AILRON = .000 ELEVON = .000
GRID = 8.000

RUN NO. 330/ 0 GRADIENT INTERVAL = -5.00/ 5.00

DLT-X	DLT-Z	CN	CA	CLM	CY	CYN	CBL	XCP/L	CPB1	CPB2	CPBC
.493	502.590	.10227	.10445	-.04499	-.04121	-.00046	.00456	1.09990	-.01331	-.01347	-.01228
.529	605.150	.06093	.09682	-.04861	-.03810	-.00047	.00503	1.45780	-.01297	-.01310	-.01163
.450	702.660	-.08307	.09133	-.04039	-.04155	-.00063	.00370	.17379	-.01397	-.01405	-.01259
1.771	804.360	-.19469	.09539	-.02191	-.04451	-.00028	.00156	.54745	-.01675	-.01668	-.01610
	GRADIENT	.00000	.00000	.00000	.00000	.00000	.00000	.00000	.00000	.00000	.00000

ORIGINAL PAGE IS OF POOR QUALITY

AEDC VA422(IA17) ORB AND ET SEPARATING(ORB DATA) (RTR041) (24 JUL 75)

REFERENCE DATA

SREF = 2690.0000 SQ.FT. XMRP = 1089.6000 IN. XO
LREF = 1290.3000 IN. YMRP = .0000 IN. YO
BREF = 1290.3000 IN. ZMRP = 375.0000 IN. ZO
SCALE = .0100

PARAMETRIC DATA

DLT-Y = .000 ALPHA = -10.000
BETA = 3.000 DLTALF = -15.000
DLTBTA = .000 MACH = 5.930
AILRON = .000 ELEVON = .000
GRID = 8.000

RUN NO. 331/ 0 GRADIENT INTERVAL = -5.00/ 5.00

DLT-X	DLT-Z	CN	CA	CLM	CY	CYN	CBL	XCP/L	CPB1	CPB2	CPBC
200.470	500.480	.01248	.08212	-.05870	-.04124	-.00073	.00513	5.37220	-.01588	-.01615	-.01519
200.410	600.510	-.04647	.08733	-.05188	-.04128	-.00065	.00293	-.45647	-.01420	-.01461	-.01292
200.300	698.800	-.13755	.09019	-.03201	-.04342	-.00046	.00197	.42732	-.01160	-.01212	-.00983
200.440	799.140	-.20731	.09663	-.01906	-.04431	-.00021	.00161	.56807	-.00815	-.00882	-.00603
	GRADIENT	.00000	.00000	.00000	.00000	.00000	.00000	.00000	.00000	.00000	.00000

RUN NO. 332/ 0 GRADIENT INTERVAL = -5.00/ 5.00

DLT-X	DLT-Z	CN	CA	CLM	CY	CYN	CBL	XCP/L	CPB1	CPB2	CPBC
400.560	501.710	-.11287	.08897	-.04030	-.04299	-.00055	.00354	.30300	.00093	-.00013	.00381
400.480	600.790	-.19346	.09196	-.02202	-.04421	-.00035	.00162	.54616	-.00276	-.00364	-.00017
400.490	700.750	-.20316	.09469	-.01897	-.04461	-.00029	.00139	.56664	-.00577	-.00623	-.00382
400.430	800.540	-.20510	.09711	-.01893	-.04465	-.00023	.00142	.56770	-.00626	-.00669	-.00432
	GRADIENT	.00000	.00000	.00000	.00000	.00000	.00000	.00000	.00000	.00000	.00000

AEDC VA422(IA17) ORB AND ET SEPARATING(ORB DATA) (RTR042) (24 JUL 75)

REFERENCE DATA

SREF = 2690.0000 SQ.FT. XMRP = 1089.6000 IN. XO
LREF = 1290.3000 IN. YMRP = .0000 IN. YO
BREF = 1290.3000 IN. ZMRP = 375.0000 IN. ZO
SCALE = .0100

PARAMETRIC DATA

DLT-Y = .000 ALPHA = -10.000
BETA = .000 DLTALF = .000
DLTBTA = .000 MACH = 5.930
AILRON = .000 ELEVON = .000
GRID = 9.000

RUN NO. 344/ 0 GRADIENT INTERVAL = -5.00/ 5.00

DLT-X	DLT-Z	CN	CA	CLM	CY	CYN	CBL	XCP/L	CPB1	CPB2	CPBC
.511	31.142	-.09638	.12268	-.00797	.00448	.00017	.00021	.57728	-.02270	-.02178	-.02097
.512	102.880	-.10522	.10678	-.01118	.00183	.00022	-.00012	.55376	-.02330	-.02243	-.02162
.587	202.290	-.15339	.09930	-.01752	.00232	.00028	-.00043	.54576	-.02410	-.02332	-.02264
.539	300.620	-.19590	.09816	-.02082	.00235	.00028	-.00031	.55370	-.02457	-.02390	-.02332
.524	400.190	-.21316	.09858	-.01797	.00229	.00028	-.00030	.57572	-.02482	-.02422	-.02371
.424	500.290	-.21371	.09940	-.01787	.00240	.00027	-.00030	.57639	-.02483	-.02424	-.02374
	GRADIENT	.00000	.00000	.00000	.00000	.00000	.00000	.00000	.00000	.00000	.00000

AEDC VA422(IA17) ORB AND ET SEPARATING(ORB DATA) (RTR042) (24 JUL 75)

REFERENCE DATA

SREF = 2690.0000 SQ.FT. XMRP = 1089.6000 IN. XO
LREF = 1290.3000 IN. YMRP = .0000 IN. YO
BREF = 1290.3000 IN. ZMRP = 375.0000 IN. ZO
SCALE = .0100

PARAMETRIC DATA

DLT-Y = .000 ALPHA = -10.000
BETA = .000 DLTALF = .000
DLTBTA = .000 MACH = 5.930
AILRON = .000 ELEVON = .000
GRID = 9.000

RUN NO. 345/ 0 GRADIENT INTERVAL = -5.00/ 5.00

DLT-X	DLT-Z	CN	CA	CLM	CY	CYN	CBL	XCP/L	CPB1	CPB2	CPBC
200.500	32.024	-.07749	.11269	.00068	.00258	.00008	.00035	.66877	-.02543	-.02365	-.02285
200.420	100.180	-.11572	.10670	-.00877	.00236	.00022	-.00019	.58423	-.02315	-.02138	-.01990
200.470	197.440	-.15859	.09914	-.01891	.00241	.00029	-.00036	.54075	-.02168	-.02003	-.01852
200.490	298.420	-.20043	.09793	-.02035	.00241	.00027	-.00031	.55849	-.02115	-.01959	-.01829
200.410	399.780	-.21332	.09874	-.01791	.00224	.00026	-.00031	.57603	-.02100	-.01951	-.01838
200.410	500.180	-.21355	.09928	-.01784	.00230	.00026	-.00030	.57647	-.02111	-.01970	-.01876
	GRADIENT	.00000	.00000	.00000	.00000	.00000	.00000	.00000	.00000	.00000	.00000

RUN NO. 346/ 0 GRADIENT INTERVAL = -5.00/ 5.00

DLT-X	DLT-Z	CN	CA	CLM	CY	CYN	CBL	XCP/L	CPB1	CPB2	CPBC
400.370	32.865	-.08108	.10787	-.00001	.00207	.00019	-.00007	.65990	-.02100	-.02000	-.01908
400.460	103.410	-.10329	.10276	-.01357	.00227	.00023	-.00027	.52865	-.02201	-.02094	-.02024
400.470	201.580	-.16678	.09868	-.02094	.00238	.00029	-.00036	.53443	-.02235	-.02132	-.02070
400.490	300.600	-.20435	.09800	-.01993	.00237	.00026	-.00030	.56247	-.02254	-.02151	-.02098
400.420	400.250	-.21355	.09912	-.01791	.00244	.00028	-.00030	.57614	-.02234	-.02128	-.02074
400.400	500.180	-.21386	.09944	-.01786	.00229	.00027	-.00030	.57651	-.02201	-.02086	-.02025
	GRADIENT	.00000	.00000	.00000	.00000	.00000	.00000	.00000	.00000	.00000	00000

AEDC VA422(IA17) ORB AND ET SEPARATING(ORB DATA) (RTR043) (24 JUL 75)

REFERENCE DATA

SREF = 2690.0000 SQ.FT. XMRP = 1089.6000 IN. XO
LREF = 1290.3000 IN. YMRP = .0000 IN. YO
BREF = 1290.3000 IN. ZMRP = 375.0000 IN. ZO
SCALE = .0100

PARAMETRIC DATA

DLT-Y = .000 ALPHA = -10.000
BETA = .000 DLTALF = -5.000
DLTBTA = .000 MACH = 5.930
AILRON = .000 ELEVON = .000
GRID = 9.000

RUN NO. 350/ 0 GRADIENT INTERVAL = -5.00/ 5.00

DLT-X	DLT-Z	CN	CA	CLM	CY	CYN	CBL	XCP/L	CPB1	CPB2	CPBC
.391	205.110	-.00745	.10759	-.02643	.00180	.00028	.00024	-2.88680	-.01994	-.01904	-.01802
.476	302.410	-.12380	.09559	-.02955	.00271	.00016	-.00003	.42132	-.02104	-.02011	-.01912
.479	400.540	-.19634	.09566	-.02170	.00230	.00027	-.00023	.54947	-.02268	-.02175	-.02121
.419	500.130	-.21259	.09852	-.01811	.00219	.00026	-.00030	.57482	-.02291	-.02200	-.02167
.634	600.380	-.21352	.09951	-.01783	.00226	.00027	-.00030	.57648	-.02268	-.02172	-.02140
	GRADIENT	.00000	.00000	.00000	.00000	.00000	.00000	.00000	.00000	.00000	.00000

RUN NO. 351/ 0 GRADIENT INTERVAL = -5.00/ 5.00

DLT-X	DLT-Z	CN	CA	CLM	CY	CYN	CBL	XCP/L	CPB1	CPB2	CPBC
200.380	198.920	-.03152	.09830	-.03159	.00191	.00020	-.00029	-.34225	-.02106	-.02015	-.01949
200.330	296.510	-.15557	.09702	-.02472	.00204	.00022	-.00029	.50110	-.01955	-.01861	-.01744
200.430	398.650	-.20295	.09777	-.02032	.00222	.00026	-.00029	.55989	-.01831	-.01738	-.01611
200.450	499.940	-.21262	.09925	-.01803	.00223	.00027	-.00031	.57521	-.01794	-.01702	-.01594
200.430	600.170	-.21309	.09989	-.01793	.00233	.00027	-.00030	.57584	-.01834	-.01744	-.01664
	GRADIENT	.00000	.00000	.00000	.00000	.00000	.00000	.00000	.00000	.00000	.00000

AEDC VA422(IA17) ORB AND ET SEPARATING(ORB DATA) (RTR044) (24 JUL 75)

REFERENCE DATA

SREF = 2690.0000 SQ.FT. XMRP = 1089.6000 IN. XO
LREF = 1290.3000 IN. YMRP = .0000 IN. YO
BREF = 1290.3000 IN. ZMRP = 375.0000 IN. ZO
SCALE = .0100

PARAMETRIC DATA

DLT-Y = .000 ALPHA = -10.000
BETA = .000 DLTALF = -10.000
DLTBTA = .000 MACH = 5.930
AILRON = .000 ELEVON = .000
GRID = 9.000

RUN NO. 352/ 0 GRADIENT INTERVAL = -5.00/ 5.00

DLT-X	DLT-Z	CN	CA	CLM	CY	CYN	CBL	XCP/L	CPB1	CPB2	CPBC
.449	403.090	-.02325	.09591	-.04649	.00345	.00009	.00102	-1.33960	-.01906	-.01844	-.01707
.480	501.870	-.10506	.09086	-.04065	.00300	.00008	-.00006	.27313	-.02059	-.01993	-.01870
.379	600.480	-.19691	.09496	-.02168	.00233	.00025	.00010	.54992	-.02256	-.02185	-.02127
.535	700.260	-.21216	.09889	-.01816	.00229	.00026	-.00029	.57440	-.02298	-.02232	-.02194
.688	800.580	-.21352	.10000	-.01793	.00217	.00025	-.00031	.57603	-.02277	-.02212	-.02184
	GRADIENT	.00000	.00000	.00000	.00000	.00000	.00000	.00000	.00000	.00000	.00000

AEDC VA422(IA17) ORB AND ET SEPARATING(ORB DATA) (RTR044) (24 JUL 75)

REFERENCE DATA

SREF = 2690.0000 SQ.FT. XMRP = 1089.6000 IN. XO
LREF = 1290.3000 IN. YMRP = .0000 IN. YO
BREF = 1290.3000 IN. ZMRP = 375.0000 IN. ZO
SCALE = .0100

PARAMETRIC DATA

DLT-Y = .000 ALPHA = -10.000
BETA = .000 DLTALF = -10.000
DLTBTA = .000 MACH = 5.930
AILRON = .000 ELEVON = .000
GRID = 9.000

RUN NO. 353/ 0 GRADIENT INTERVAL = -5.00/ 5.00

DLT-X	DLT-Z	CN	CA	CLM	CY	CYN	CBL	XCP/L	CPB1	CPB2	CPBC
200.420	398.190	-.10162	.09178	-.04150	.00281	.00015	.00004	.25164	-.01882	-.01797	-.01686
200.420	498.600	-.19763	.09478	-.02173	.00236	.00026	-.00000	.55003	-.01697	-.01622	-.01439
200.240	600.100	-.20817	.09694	-.01873	.00212	.00026	-.00028	.57000	-.01413	-.01351	-.01131
200.460	700.150	-.21218	.09957	-.01810	.00205	.00026	-.00030	.57468	-.01311	-.01248	-.01069
200.440	800.270	-.21299	.10027	-.01801	.00220	.00026	-.00030	.57546	-.01413	-.01345	-.01227
	GRADIENT	.00000	.00000	.00000	.00000	.00000	.00000	.00000	.00000	.00000	.00000

RUN NO. 354/ 0 GRADIENT INTERVAL = -5.00/ 5.00

DLT-X	DLT-Z	CN	CA	CLM	CY	CYN	CBL	XCP/L	CPB1	CPB2	CPBC
400.430	401.250	-.16021	.09419	-.02969	.00225	.00025	-.00025	.47478	-.01974	-.01906	-.01830
400.530	500.610	-.20902	.09749	-.01882	.00222	.00026	-.00029	.56994	-.02079	-.02016	-.01973
400.420	600.670	-.21175	.09882	-.01828	.00213	.00024	-.00029	.57365	-.02092	-.02034	-.02011
400.360	700.360	-.21325	.10011	-.01798	.00222	.00025	-.00030	.57568	-.02045	-.01987	-.01966
400.440	800.080	-.21322	.10023	-.01797	.00221	.00025	-.00030	.57573	-.01980	-.01921	-.01897
	GRADIENT	.00000	.00000	.00000	.00000	.00000	.00000	.00000	.00000	.00000	.00000

AEDC VA422(IA17) ORB AND ET SEPARATING(ORB DATA) (RTR045) (24 JUL 75)

REFERENCE DATA

SREF = 2690.0000 SQ.FT. XMRP = 1089.6000 IN. XO
LREF = 1290.3000 IN. YMRP = .0000 IN. YO
BREF = 1290.3000 IN. ZMRP = 375.0000 IN. ZO
SCALE = .0100

PARAMETRIC DATA

DLT-Y = .000 ALPHA = -10.000
BETA = .000 DLTALF = -15.000
DLTBTA = .000 MACH = 5.930
AILRON = .000 ELEVON = .000
GRID = 9.000

RUN NO. 358/ 0 GRADIENT INTERVAL = -5.00/ 5.00

DLT-X	DLT-Z	CN	CA	CLM	CY	CYN	CBL	XCP/L	CPB1	CPB2	CPBC
.384	502.390	.09254	.10421	-.04345	.00398	-.00006	.00173	1.12950	-.01516	-.01476	-.01355
.473	604.810	.05754	.09728	-.04806	.00320	.00001	.00090	1.49530	-.01493	-.01459	-.01305
.410	703.070	-.07362	.09162	-.04001	.00269	.00007	-.00036	.11646	-.01615	-.01572	-.01432
1.533	804.250	-.19954	.09559	-.02106	.00236	.00025	-.00017	.55443	-.01925	-.01863	-.01826
	GRADIENT	.00000	.00000	.00000	.00000	.00000	.00000	.00000	.00000	.00000	.00000

ORIGINAL PAGE IS OF POOR QUALITY

AEDC VA422(IA17) ORB AND ET SEPARATING(ORB DATA) (RTR045) (24 JUL 75)

REFERENCE DATA

SREF = 2690.0000 SQ.FT. XMRP = 1089.6000 IN. XO
LREF = 1290.3000 IN. YMRP = .0000 IN. YO
BREF = 1290.3000 IN. ZMRP = 375.0000 IN. ZO
SCALE = .0100

PARAMETRIC DATA

DLT-Y = .000 ALPHA = -10.000
BETA = .000 DLTALF = -15.000
DLTBTA = .000 MACH = 5.930
AILRON = .000 ELEVON = .000
GRID = 9.000

RUN NO. 359/ 0 GRADIENT INTERVAL = -5.00/ 5.00

DLT-X	DLT-Z	CN	CA	CLM	CY	CYN	CBL	XCP/L	CPB1	CPB2	CPBC
200.290	500.460	.01070	.09307	-.05648	.00355	.00001	.00074	5.93900	-.01909	-.01850	-.01793
200.380	600.610	-.04994	.08758	-.05142	.00317	.00003	-.00016	-.36980	-.01761	-.01697	-.01559
200.380	698.740	-.13819	.09031	-.03236	.00329	.00024	-.00015	.42585	-.01531	-.01480	-.01268
200.500	799.270	-.20783	.09686	-.01884	.00213	.00025	-.00028	.56933	-.01180	-.01157	-.00890
	GRADIENT	.00000	.00000	.00000	.00000	.00000	.00000	.00000	.00000	.00000	.00000

RUN NO. 360/ 0 GRADIENT INTERVAL = -5.00/ 5.00

DLT-X	DLT-Z	CN	CA	CLM	CY	CYN	CBL	XCP/L	CPB1	CPB2	CPBC
400.460	501.840	-.11127	.08979	-.03957	.00284	.00020	.00004	.30435	-.00253	-.00220	.00051
400.420	600.750	-.19682	.09261	-.02176	.00230	.00022	-.00009	.54946	-.00589	-.00567	-.00305
400.380	700.840	-.20384	.09432	-.01955	.00215	.00023	-.00030	.56409	-.00941	-.00918	-.00730
400.250	800.330	-.20964	.09841	-.01859	.00212	.00025	-.00033	.57131	-.00949	-.00920	-.00738
	GRADIENT	.00000	.00000	.00000	.00000	.00000	.00000	.00000	.00000	.00000	.00000

AEDC VA422(IA17) ORB AND ET SEPARATING(ORB DATA) (RTR046) (24 JUL 75)

REFERENCE DATA

SREF = 2690.0000 SQ.FT. XMRP = 1089.6000 IN. XO
LREF = 1290.3000 IN. YMRP = .0000 IN. YO
BREF = 1290.3000 IN. ZMRP = 375.0000 IN. ZO
SCALE = .0100

PARAMETRIC DATA

DLT-Y = .000 ALPHA = -10.000
BETA = .000 DLTALF = .000
DLTBTA = .000 MACH = 5.930
AILRON = .000 ELEVON = -20.000
GRID = 10.000

RUN NO. 387/ 0 GRADIENT INTERVAL = -5.00/ 5.00

DLT-X	DLT-Z	CN	CA	CLM	CY	CYN	CBL	XCP/L	CPB1	CPB2	CPBC
.503	31.177	-.13348	.13160	-.00017	.00523	.00018	-.00014	.65870	-.02366	-.02206	-.02009
.526	102.800	-.14608	.11742	-.00189	.00276	.00023	-.00043	.64708	-.02449	-.02312	-.02078
.580	202.360	-.19542	.11097	-.00796	.00238	.00012	-.00080	.61925	-.02529	-.02405	-.02171
.521	300.810	-.23632	.10963	-.01167	.00237	.00012	-.00079	.61064	-.02569	-.02460	-.02233
.600	400.150	-.25365	.11072	-.00894	.00247	.00012	-.00078	.62477	-.02578	-.02473	-.02252
.450	500.290	-.25414	.11129	-.00883	.00249	.00012	-.00078	.62528	-.02577	-.02472	-.02253
	GRADIENT	.00000	.00000	.00000	.00000	.00000	.00000	.00000	.00000	.00000	.00000

AEDC VA422(IA17) ORB AND ET SEPARATING(ORB DATA) (RTR046) (24 JUL 75)

REFERENCE DATA

SREF = 2690.0000 SQ.FT. XMRP = 1089.6000 IN. XO
LREF = 1290.3000 IN. YMRP = .0000 IN. YO
BREF = 1290.3000 IN. ZMRP = 375.0000 IN. ZO
SCALE = .0100

PARAMETRIC DATA

DLT-Y = .000 ALPHA = -10.000
BETA = .000 DLTALF = .000
DLTBTA = .000 MACH = 5.930
AILRON = .000 ELEVON = -20.000
GRID = 10.000

RUN NO. 389/ 0 GRADIENT INTERVAL = -5.00/ 5.00

DLT-X	DLT-Z	CN	CA	CLM	CY	CYN	CBL	XCP/L	CPB1	CPB2	CPBC
400.420	31.970	-.12237	.11958	.01021	.00286	.00025	-.00045	.74345	-.02262	-.02041	-.01861
400.450	100.180	-.14427	.11481	-.00267	.00276	.00006	-.00055	.64152	-.01986	-.01793	-.01619
400.400	196.840	-.20547	.10999	-.01126	.00246	.00013	-.00080	.60520	-.01900	-.01731	-.01565
400.410	298.740	-.24488	.10950	-.01091	.00231	.00011	-.00078	.61546	-.01883	-.01721	-.01574
400.400	399.860	-.25365	.11093	-.00884	.00237	.00013	-.00078	.62516	-.01904	-.01741	-.01612
400.410	500.150	-.25384	.11123	-.00879	.00233	.00012	-.00078	.62536	-.01959	-.01800	-.01686
	GRADIENT	.00000	.00000	.00000	.00000	.00000	.00000	.00000	.00000	.00000	.00000

ORIGINAL PAGE IS OF POOR QUALITY

AEDC VA422(IA17) ORB AND ET SEPARATING(ORB DATA) (RTR047) (24 JUL 75)

REFERENCE DATA

SREF = 2690.0000 SQ.FT. XMRP = 1089.6000 IN. XO
LREF = 1290.3000 IN. YMRP = .0000 IN. YO
BREF = 1290.3000 IN. ZMRP = 375.0000 IN. ZO
SCALE = .0100

PARAMETRIC DATA

DLT-Y = .000 ALPHA = -10.000
BETA = .000 DLTALF = -10.000
DLTBTA = .000 MACH = 5.930
AILRON = .000 ELEVON = -20.000
GRID = 10.000

RUN NO. 389/ 0 GRADIENT INTERVAL = -5.00/ 5.00

DLT-X	DLT-Z	CN	CA	CLM	CY	CYN	CBL	XCP/L	CPB1	CPB2	CPBC
.577	403.390	-.07383	.10589	-.03424	.00334	-.00001	.00050	.19628	-.01894	-.01761	-.01554
.400	501.670	-.15581	.10062	-.03083	.00344	.00005	-.00067	.46215	-.02064	-.01920	-.01710
.477	600.480	-.23985	.10559	-.01246	.00242	.00014	-.00051	.60804	-.02240	-.02102	-.01949
.434	700.320	-.25303	.11024	-.00903	.00227	.00011	-.00078	.62433	-.02245	-.02113	-.01986
.552	800.280	-.25391	.11125	-.00881	.00235	.00011	-.00078	.62532	-.02205	-.02069	-.01947
	GRADIENT	.00000	.00000	.00000	.00000	.00000	.00000	.00000	.00000	.00000	.00000

RUN NO. 390/ 0 GRADIENT INTERVAL = -5.00/ 5.00

DLT-X	DLT-Z	CN	CA	CLM	CY	CYN	CBL	XCP/L	CPB1	CPB2	CPBC
400.480	397.260	-.19981	.10587	-.02048	.00247	.00012	-.00066	.55751	-.01382	-.01256	-.01001
400.430	499.340	-.24965	.10959	-.00988	.00213	.00013	-.00074	.62042	-.01254	-.01139	-.00911
400.430	600.210	-.25116	.11013	-.00935	.00216	.00013	-.00078	.62279	-.01267	-.01175	-.00988
400.320	700.130	-.25292	.11169	-.00899	.00215	.00012	-.00078	.62444	-.01353	-.01274	-.01116
400.480	800.160	-.25317	.11183	-.00896	.00223	.00012	-.00077	.62462	-.01495	-.01413	-.01284
	GRADIENT	.00000	.00000	.00000	.00000	.00000	.00000	.00000	.00000	.00000	.00000

AEDC VA422(IA17) ORB AND ET SEPARATING(ORB DATA) (RTR048) (24 JUL 75)

REFERENCE DATA

SREF = 2690.0000 SQ.FT. XMRP = 1089.6000 IN. XO
LREF = 1290.3000 IN. YMRP = .0000 IN. YO
BREF = 1290.3000 IN. ZMRP = 375.0000 IN. ZO
SCALE = .0100

PARAMETRIC DATA

DLT-Y = .000 ALPHA = -5.000
BETA = .000 DLTALF = .000
DLTBTA = .000 MACH = 5.930
AILRON = .000 ELEVON = -20.000
GRID = 11.000

RUN NO. 396/ 0 GRADIENT INTERVAL = -5.00/ 5.00

DLT-X	DLT-Z	CN	CA	CLM	CY	CYN	CBL	XCP/L	CPB1	CPB2	CPBC
.570	19.256	-.09433	.10601	-.00388	.00339	-.00012	-.00017	.61885	-.02646	-.02576	-.02516
.547	101.610	-.07481	.10539	.00064	.00383	.00019	-.00028	.66851	-.02671	-.02601	-.02546
.505	201.920	-.09315	.10234	-.00334	.00261	-.00007	-.00046	.62412	-.02689	-.02621	-.02576
.607	301.350	-.12344	.09508	-.00964	.00274	-.00009	-.00041	.58194	-.02700	-.02633	-.02597
.562	400.190	-.15876	.09420	-.00950	.00256	-.00009	-.00039	.60019	-.02701	-.02636	-.02607
.635	500.230	-.16747	.09523	-.00727	.00266	-.00009	-.00040	.61657	-.02695	-.02634	-.02612
.571	600.220	-.16751	.09546	-.00729	.00265	-.00009	-.00039	.61650	-.02685	-.02621	-.02603
	GRADIENT	.00000	.00000	.00000	.00000	.00000	.00000	.00000	.00000	.00000	.00000

RUN NO. 397/ 0 GRADIENT INTERVAL = -5.00/ 5.00

DLT-X	DLT-Z	CN	CA	CLM	CY	CYN	CBL	XCP/L	CPB1	CPB2	CPBC
400.480	20.133	-.04362	.10048	.01249	.00315	.00012	.00012	.94629	-.02732	-.02620	-.02543
400.460	100.170	-.07015	.10266	.00026	.00245	-.00005	-.00042	.66376	-.02590	-.02474	-.02378
400.500	197.570	-.10452	.09572	-.00880	.00262	-.00009	-.00039	.57578	-.02553	-.02446	-.02346
400.450	298.050	-.14839	.09398	-.01100	.00257	-.00010	-.00040	.58590	-.02543	-.02441	-.02344
400.400	399.980	-.16719	.09477	-.00731	.00255	-.00008	-.00040	.61628	-.02541	-.02445	-.02351
400.490	500.190	-.16746	.09537	-.00723	.00250	-.00009	-.00040	.61680	-.02542	-.02446	-.02354
400.530	600.100	-.16766	.09549	-.00725	.00253	-.00009	-.00040	.61674	-.02557	-.02467	-.02382
	GRADIENT	.00000	.00000	.00000	.00000	.00000	.00000	.00000	.00000	.00000	.00000

AEDC VA422(IA17) ORB AND ET SEPARATING(ORB DATA) (RTR049) (24 JUL 75)

REFERENCE DATA

SREF = 2690.0000 SQ.FT. XMRP = 1089.6000 IN. XO
LREF = 1290.3000 IN. YMRP = .0000 IN. YO
BREF = 1290.3000 IN. ZMRP = 375.0000 IN. ZO
SCALE = .0100

PARAMETRIC DATA

DLT-Y = .000 ALPHA = -5.000
BETA = .000 DLTALF = -10.000
DLTBTA = .000 MACH = 5.930
AILRON = .000 ELEVON = -20.000
GRID = 11.000

RUN NO. 398/ 0 GRADIENT INTERVAL = -5.00/ 5.00

DLT-X	DLT-Z	CN	CA	CLM	CY	CYN	CBL	XCP/L	CPB1	CPB2	CPBC
.520	404.110	.01659	.09082	-.03068	.00318	-.00025	-.00008	2.50970	-.02499	-.02431	-.02295
.503	500.870	-.11717	.08892	-.01998	.00277	-.00012	-.00027	.49037	-.02614	-.02538	-.02443
.428	600.380	-.16622	.09392	-.00750	.00238	-.00010	-.00041	.61485	-.02660	-.02583	-.02512
.453	750.200	-.16773	.09559	-.00727	.00242	-.00009	-.00040	.61667	-.02650	-.02569	-.02506
.177	800.590	-.16771	.09555	-.00726	.00248	-.00009	-.00040	.61673	-.02636	-.02554	-.02490
	GRADIENT	.00000	.00000	.00000	.00000	.00000	.00000	.00000	.00000	.00000	.00000

RUN NO. 399/ 0 GRADIENT INTERVAL = -5.00/ 5.00

DLT-X	DLT-Z	CN	CA	CLM	CY	CYN	CBL	XCP/L	CPB1	CPB2	CPBC
400.490	396.850	-.12349	.09211	-.01592	.00246	-.00011	-.00050	.53107	-.02088	-.02040	-.01829
400.410	499.520	-.16397	.09444	-.00832	.00252	-.00008	-.00040	.60926	-.02017	-.01971	-.01782
400.470	500.050	-.16647	.09571	-.00738	.00235	-.00009	-.00040	.61567	-.02028	-.01981	-.01822
400.390	750.200	-.16693	.09603	-.00738	.00251	-.00009	-.00040	.61581	-.02149	-.02100	-.01992
400.520	800.200	-.16706	.09603	-.00738	.00248	-.00009	-.00040	.61585	-.02216	-.02167	-.02074
	GRADIENT	.00000	.00000	.00000	.00000	.00000	.00000	.00000	.00000	.00000	.00000

AEDC VA422(IA17) ORB AND ET SEPARATING(ORB DATA) (RTR051) (24 JUL 75)

REFERENCE DATA

SREF = 2690.0000 SQ.FT. XMRP = 1089.6000 IN. XO
LREF = 1290.3000 IN. YMRP = .0000 IN. YO
BREF = 1290.3000 IN. ZMRP = 375.0000 IN. ZO
SCALE = .0100

PARAMETRIC DATA

DLT-Y = .000 ALPHA = -5.000
BETA = .000 DLTALF = -20.000
DLTBTA = .000 MACH = 5.930
AILRON = .000 ELEVON = -20.000
GRID = 11.000

RUN NO. 408/ 0 GRADIENT INTERVAL = -5.00/ 5.00

DLT-X	DLT-Z	CN	CA	CLM	CY	CYN	CBL	XCP/L	CPB1	CPB2	CPBC
.408	804.590	.02882	.08794	-.03324	.00369	-.00048	.00075	1.81370	-.02165	-.02113	-.01909
.429	900.820	-.12114	.08799	-.02016	.00272	-.00016	-.00015	.49358	-.02326	-.02258	-.02086
.538	1000.400	-.16845	.09390	-.00754	.00232	-.00008	-.00040	.61470	-.02468	-.02393	-.02251
	GRADIENT	.00000	.00000	.00000	.00000	.00000	.00000	.00000	.00000	.00000	.00000

AEDC VA422(IA17) ORB AND ET SEPARATING(ORB DATA) (RTR051) (24 JUL 75)

REFERENCE DATA

SREF = 2690.0000 SQ.FT. XMRP = 1089.6000 IN. XO
LREF = 1290.3000 IN. YMRP = .0000 IN. YO
BREF = 1290.3000 IN. ZMRP = 375.0000 IN. ZO
SCALE = .0100

PARAMETRIC DATA

DLT-Y = .000 ALPHA = -5.000
BETA = .000 DLTALF = -20.000
DLTBTA = .000 MACH = 5.930
AILRON = .000 ELEVON = -20.000
GRID = 11.000

RUN NO. 400/ 0 GRADIENT INTERVAL = -5.00/ 5.00

DLT-X	DLT-Z	CN	CA	CLM	CY	CYN	CBL	XCP/L	CPB1	CPB2	CPBC
400.440	751.120	-.12006	.08197	-.01684	.00322	-.00001	.00039	.51975	-.01822	-.01801	-.01458
400.460	800.570	-.16101	.08760	-.00879	.00245	-.00010	-.00039	.60539	-.02325	-.02269	-.02108
400.430	900.320	-.16567	.09256	-.00764	.00243	-.00009	-.00040	.61389	-.02468	-.02414	-.02343
400.500	1000.400	-.16675	.09567	-.00735	.00237	-.00010	-.00040	.61594	-.02446	-.02394	-.02328
	GRADIENT	.00000	.00000	.00000	.00000	.00000	.00000	.00000	.00000	.00000	.00000

AEDC VA422(IA17) ORB AND ET SEPARATING(ORB DATA) (RTR052) (24 JUL 75)

REFERENCE DATA

SREF = 2690.0000 SQ.FT. XMRP = 1089.6000 IN. XO
LREF = 1290.3000 IN. YMRP = .0000 IN. YO
BREF = 1290.3000 IN. ZMRP = 375.0000 IN. ZO
SCALE = .0100

PARAMETRIC DATA

DLT-Y = .000 ALPHA = 5.000
BETA = .000 DLTALF = .000
DLTBTA = .000 MACH = 5.930
AILRON = .000 ELEVON = -20.000
GRID = 12.000

RUN NO. 409/ 0 GRADIENT INTERVAL = -5.00/ 5.00

DLT-X	DLT-Z	CN	CA	CLM	CY	CYN	CBL	XCP/L	CPB1	CPB2	CPBC
.657	19.218	.02297	.06207	-.00931	.00068	-.00035	-.00006	1.06510	-.02645	-.02633	-.02615
.616	98.044	.02826	.07504	-.00198	.00133	-.00010	.00010	.72999	-.02601	-.02590	-.02569
.557	199.160	.04935	.07422	.01237	.00142	.00004	-.00017	.40943	-.02556	-.02547	-.02530
.633	300.180	.09568	.07666	.00405	.00143	.00000	-.00023	.61763	-.02510	-.02501	-.02482
.607	402.140	.12634	.07433	-.00876	.00172	-.00010	-.00027	.72931	-.02463	-.02454	-.02436
.628	500.990	.06969	.06670	-.00911	.00126	.00003	-.00024	.79077	-.02422	-.02411	-.02396
.691	598.250	.03355	.06749	-.00528	.00128	.00005	-.00022	.81741	-.02383	-.02370	-.02359
	GRADIENT	.00000	.00000	.00000	.00000	.00000	.00000	.00000	.00000	.00000	.00000

RUN NO. 410/ 0 GRADIENT INTERVAL = -5.00/ 5.00

DLT-X	DLT-Z	CN	CA	CLM	CY	CYN	CBL	XCP/L	CPB1	CPB2	CPBC
400.520	20.011	.07728	.07470	.01726	.00166	.00005	.00016	.43662	-.02921	-.02912	-.02884
400.430	98.263	.07415	.07393	.01111	.00104	.00013	-.00021	.51020	-.02917	-.02906	-.02874
400.520	199.950	.12387	.07757	-.00067	.00146	.00005	-.00019	.66540	-.02911	-.02898	-.02858
400.580	298.680	.11543	.06863	-.01053	.00129	-.00000	-.00018	.75120	-.02916	-.02899	-.02858
400.600	397.990	.05402	.06658	-.00802	.00116	.00002	-.00024	.80846	-.02924	-.02908	-.02864
400.580	499.530	.02878	.06769	-.00402	.00121	.00003	-.00023	.79983	-.02926	-.02910	-.02860
400.670	599.830	.02735	.06887	-.00346	.00119	.00003	-.00023	.78648	-.02910	-.02895	-.02333
	GRADIENT	.00000	.00000	.00000	.00000	.00000	.00000	.00000	.00000	.00000	.00000

AEDC VA422(IA17) ORB AND ET SEPARATING(ORB DATA) (RTR053) (24 JUL 75)

REFERENCE DATA

SREF = 2690.0000 SQ.FT. XMRP = 1089.6000 IN. XO
LREF = 1290.3000 IN. YMRP = .0000 IN. YO
BREF = 1290.3000 IN. ZMRP = 375.0000 IN. ZO
SCALE = .0100

PARAMETRIC DATA

DLT-Y = .000 ALPHA = 5.000
BETA = .000 DLTALF = -10.000
DLTBTA = .000 MACH = 5.930
AILRON = .000 ELEVON = -20.000
GRID = 12.000

RUN NO. 411/ 0 GRADIENT INTERVAL = -5.00/ 5.00

DLT-X	DLT-Z	CN	CA	CLM	CY	CYN	CBL	XCP/L	CPB1	CPB2	CPBC
.562	401.130	.16883	.07612	-.00217	.00147	-.00003	-.00005	.67288	-.02812	-.02800	-.02711
.462	502.800	.17077	.07619	-.01226	.00162	-.00012	-.00026	.73180	-.02816	-.02803	-.02713
.487	601.670	.09606	.06622	-.01272	.00126	-.00000	-.00005	.79239	-.02830	-.02815	-.02725
.628	750.080	.02942	.06713	-.00416	.00135	.00004	-.00022	.80134	-.02894	-.02877	-.02804
-.651	802.930	.02739	.06797	-.00342	.00127	.00002	-.00023	.78482	-.02912	-.02896	-.02831
	GRADIENT	.00000	.00000	.00000	.00000	.00000	.00000	.00000	.00000	.00000	.00000

RUN NO. 412/ 0 GRADIENT INTERVAL = -5.00/ 5.00

DLT-X	DLT-Z	CN	CA	CLM	CY	CYN	CBL	XCP/L	CPB1	CPB2	CPBC
400.470	398.070	.15492	.06804	-.01550	.00138	-.00002	.00020	.76002	-.02720	-.02702	-.02593
400.610	497.620	.07039	.06598	-.01005	.00121	.00001	-.00020	.80281	-.02693	-.02673	-.02565
400.460	599.230	.03226	.06716	-.00510	.00122	.00003	-.00022	.81803	-.02680	-.02663	-.02556
400.660	750.100	.02766	.06910	-.00350	.00124	.00002	-.00023	.78650	-.02658	-.02645	-.02535
400.600	800.160	.02760	.06908	-.00351	.00114	.00001	-.00023	.78703	-.02675	-.02663	-.02561
	GRADIENT	.00000	.00000	.00000	.00000	.00000	.00000	.00000	.00000	.00000	.00000

AEDC VA422(IA17) ORB AND ET SEPARATING(ORB DATA) (RTR055) (24 JUL 75)

REFERENCE DATA

SREF = 2690.0000 SQ.FT. XMRP = 1089.6000 IN. XO
LREF = 1290.3000 IN. YMRP = .0000 IN. YO
BREF = 1290.3000 IN. ZMRP = 375.0000 IN. ZO
SCALE = .0100

PARAMETRIC DATA

DLT-Y = .000 ALPHA = 5.000
BETA = .000 DLTALF = -20.000
DLTBTA = .000 MACH = 5.930
AILRON = .000 ELEVON = -20.000
GRID = 12.000

RUN NO. 419/ 0 GRADIENT INTERVAL = -5.00/ 5.00

DLT-X	DLT-Z	CN	CA	CLM	CY	CYN	CBL	XCP/L	CPB1	CPB2	CPBC
.420	801.230	.12603	.06073	-.02739	.00177	-.00019	-.00004	.87730	-.02452	-.02484	-.02217
.490	900.170	.03549	.06598	-.00620	.00125	-.00001	-.00018	.83478	-.02569	-.02591	-.02322
.412	1000.100	.02669	.06620	-.00334	.00111	.00002	-.00023	.78518	-.02768	-.02769	-.02576
	GRADIENT	.00000	.00000	.00000	.00000	.00000	.00000	.00000	.00000	.00000	.00000

AEDC VA422(IA17) ORB AND ET SEPARATING(ORB DATA) (RTR055) (24 JUL 75)

REFERENCE DATA

SREF = 2690.0000 SQ.FT. XMRP = 1089.6000 IN. XO
LREF = 1290.3000 IN. YMRP = .0000 IN. YO
BREF = 1290.3000 IN. ZMRP = 375.0000 IN. ZO
SCALE = .0100

PARAMETRIC DATA

DLT-Y = .000 ALPHA = 5.000
BETA = .000 DLTALF = -20.000
DLTBTA = .000 MACH = 5.930
AILRON = .000 ELEVON = -20.000
GRID = 12.000

RUN NO. 413/ 0 GRADIENT INTERVAL = -5.00/ 5.00

DLT-X	DLT-Z	CN	CA	CLM	CY	CYN	CBL	XCP/L	CPB1	CPB2	CPBC
400.500	750.220	.03175	.06529	-.00476	.00123	.00001	-.00022	.81004	-.02764	-.02748	-.02621
400.510	800.280	.02763	.06657	-.00339	.00120	.00003	-.00023	.78285	-.02819	-.02799	-.02721
400.430	900.070	.02785	.06834	-.00348	.00115	.00001	-.00023	.78497	-.02811	-.02794	-.02725
400.510	1000.300	.02784	.06905	-.00348	.00115	.00000	-.00023	.78516	-.02791	-.02774	-.02702
	GRADIENT	.00000	.00000	.00000	.00000	.00000	.00000	.00000	.00000	.00000	.00000

AEDC VA422(IA17) ORB AND ET SEPARATING(ORB DATA) (RTR056) (24 JUL 75)

REFERENCE DATA

SREF = 2690.0000 SQ.FT. XMRP = 1089.6000 IN. XO
LREF = 1290.3000 IN. YMRP = .0000 IN. YO
BREF = 1290.3000 IN. ZMRP = 375.0000 IN. ZO
SCALE = .0100

PARAMETRIC DATA

DLT-Y = .000 ALPHA = .000
BETA = .000 DLTALF = .000
DLTBTA = .000 MACH = 5.930
AILRON = .000 ELEVON = -20.000
GRID = 13.000

RUN NO. 422/ 0 GRADIENT INTERVAL = -5.00/ 5.00

DLT-X	DLT-Z	CN	CA	CLM	CY	CYN	CBL	XCP/L	CPB1	CPB2	CPBC
.558	18.831	-.03735	.08248	-.00788	.00172	.00000	-.00008	.44892	-.02605	-.02571	-.02540
.548	99.442	-.02733	.09134	.00132	.00207	.00018	.00002	.70815	-.02594	-.02561	-.02530
.534	200.570	-.00389	.08705	.00321	.00199	.00007	-.00047	.00000	-.02580	-.02547	-.02524
.572	302.170	.01539	.08504	-.00885	.00184	.00010	-.00040	1.22220	-.02564	-.02530	-.02512
.610	400.890	-.03074	.07731	-.01120	.00187	.00020	-.00031	.29548	-.02554	-.02519	-.02509
.645	499.990	-.06261	.07738	-.00848	.00148	.00020	-.00036	.52464	-.02541	-.02502	-.02503
.608	600.050	-.06823	.07847	-.00682	.00136	.00020	-.00036	.56010	-.02518	-.02478	-.02486
	GRADIENT	.00000	.00000	.00000	.00000	.00000	.00000	.00000	.00000	.00000	.00000

RUN NO. 423/ 0 GRADIENT INTERVAL = -5.00/ 5.00

DLT-X	DLT-Z	CN	CA	CLM	CY	CYN	CBL	XCP/L	CPB1	CPB2	CPBC
400.530	19.977	.02846	.08559	.01266	.00246	.00028	.00001	.21505	-.02855	-.02801	-.02763
400.490	97.644	.01391	.08440	.00330	.00240	-.00001	-.00022	.42273	-.02825	-.02761	-.02714
400.540	198.800	.02772	.08276	-.00886	.00164	.00011	-.00038	.97962	-.02793	-.02721	-.02672
400.430	297.670	-.02707	.07725	-.01167	.00150	.00019	-.00039	.22880	-.02780	-.02709	-.02656
400.460	399.060	-.06289	.07728	-.00861	.00136	.00019	-.00037	.52305	-.02769	-.02698	-.02645
400.460	500.090	-.06857	.07844	-.00682	.00138	.00020	-.00037	.56060	-.02754	-.02698	-.02627
400.520	600.200	-.06857	.07862	-.00682	.00135	.00020	-.00037	.56060	-.02744	-.02682	-.02621
	GRADIENT	.00000	.00000	.00000	.00000	.00000	.00000	.00000	.00000	.00000	.00000

AEDC VA422(IA17) ORB AND ET SEPARATING(ORB DATA) (RTR057) (24 JUL 75)

REFERENCE DATA

SREF = 2690.0000 SQ.FT. XMRP = 1089.6000 IN. XO
LREF = 1290.3000 IN. YMRP = .0000 IN. YO
BREF = 1290.3000 IN. ZMRP = 375.0000 IN. ZO
SCALE = .0100

PARAMETRIC DATA

DLT-Y = .000 ALPHA = .000
BETA = .000 DLTALF = -10.000
DLTBTA = .000 MACH = 5.930
AILRON = .000 ELEVON = -20.000
GRID = 13.000

RUN NO. 424/ 0 GRADIENT INTERVAL = -5.00/ 5.00

DLT-X	DLT-Z	CN	CA	CLM	CY	CYN	CBL	XCP/L	CPB1	CPB2	CPBC
.447	403.640	.12059	.08383	-.02276	.00159	.00008	-.00026	.84973	-.02692	-.02647	-.02548
.477	501.740	.00695	.07619	-.01541	.00148	.00018	-.00036	2.87530	-.02739	-.02693	-.02607
.522	600.190	-.05229	.07608	-.01108	.00137	.00018	-.00038	.44812	-.02768	-.02721	-.02646
.545	750.040	-.06846	.07850	-.00682	.00134	.00019	-.00037	.56038	-.02779	-.02729	-.02667
-.239	801.750	-.06846	.07861	-.00682	.00145	.00020	-.00037	.56039	-.02774	-.02724	-.02662
	GRADIENT	.00000	.00000	.00000	.00000	.00000	.00000	.00000	.00000	.00000	.00000

RUN NO. 425/ 0 GRADIENT INTERVAL = -5.00/ 5.00

DLT-X	DLT-Z	CN	CA	CLM	CY	CYN	CBL	XCP/L	CPB1	CPB2	CPBC
400.520	396.740	.00426	.07570	-.01611	.00128	.00018	-.00041	4.44320	-.02355	-.02334	-.02160
400.460	498.350	-.05426	.07673	-.01095	.00140	.00020	-.00036	.46004	-.02268	-.02246	-.02078
400.540	600.240	-.06799	.07713	-.00698	.00120	.00020	-.00037	.55731	-.02251	-.02226	-.02078
400.510	750.210	-.06804	.07897	-.00694	.00130	.00019	-.00037	.55796	-.02236	-.02208	-.02081
400.530	800.170	-.06819	.07901	-.00694	.00128	.00019	-.00037	.55821	-.02286	-.02256	-.02156
	GRADIENT	.00000	.00000	.00000	.00000	.00000	.00000	.00000	.00000	.00000	.00000

AEDC VA422(IA17) ORB AND ET SEPARATING(ORB DATA) (RTR059) (24 JUL 75)

REFERENCE DATA

SREF = 2690.0000 SQ.FT. XMRP = 1089.6000 IN. XO
LREF = 1290.3000 IN. YMRP = .0000 IN. YO
BREF = 1290.3000 IN. ZMRP = 375.0000 IN. ZO
SCALE = .0100

PARAMETRIC DATA

DLT-Y = .000 ALPHA = .000
BETA = .000 DLTALF = -20.000
DLTBTA = .000 MACH = 5.930
AILRON = .000 ELEVON = -20.000
GRID = 13.000

RUN NO. 432/ 0 GRADIENT INTERVAL = -5.00/ 5.00

DLT-X	DLT-Z	CN	CA	CLM	CY	CYN	CBL	XCP/L	CPB1	CPB2	CPBC
.442	801.840	.04392	.06920	-.03141	.00204	-.00002	-.00031	1.37530	-.01938	-.01986	-.01675
.500	900.600	-.05072	.07295	-.01274	.00127	.00018	-.00033	.40889	-.02105	-.02143	-.01813
.450	1000.200	-.06842	.07509	-.00699	.00133	.00023	-.00038	.55783	-.02393	-.02396	-.02150
	GRADIENT	.00000	.00000	.00000	.00000	.00000	.00000	.00000	.00000	.00000	.00000

ORIGINAL PAGE IS OF POOR QUALITY

AEDC VA422(IA17) ORB AND ET SEPARATING(ORB DATA) (RTR059) (24 JUL 75)

REFERENCE DATA

SREF = 2690.0000 SQ.FT. XMRP = 1089.6000 IN. XO
LREF = 1290.3000 IN. YMRP = .0000 IN. YO
BREF = 1290.3000 IN. ZMRP = 375.0000 IN. ZO
SCALE = .0100

PARAMETRIC DATA

DLT-Y = .000 ALPHA = .000
BETA = .000 DLTALF = -20.000
DLTBTA = .000 MACH = 5.930
AILRON = .000 ELEVON = -20.000
GRID = 13.000

RUN NO. 426/ 0 GRADIENT INTERVAL = -5.00/ 5.00

DLT-X	DLT-Z	CN	CA	CLM	CY	CYN	CBL	XCP/L	CPB1	CPB2	CPBC
400.400	750.280	-.06745	.07421	-.00705	.00126	.00021	-.00037	.55554	-.01970	-.01952	-.01743
400.450	800.310	-.06765	.07456	-.00699	.00108	.00021	-.00038	.55663	-.02203	-.02178	-.02010
400.470	900.460	-.06800	.07557	-.00696	.00126	.00021	-.00037	.55768	-.02377	-.02351	-.02228
400.460	1000.400	-.06812	.07674	-.00693	.00120	.00020	-.00037	.55830	-.02480	-.02451	-.02349
	GRADIENT	.00000	.00000	.00000	.00000	.00000	.00000	.00000	.00000	.00000	.00000

AEDC VA422(IA17) ORB AND ET SEPARATING(ORB DATA) (RTR060) (24 JUL 75)

REFERENCE DATA

SREF = 2690.0000 SQ.FT. XMRP = 1089.6000 IN. XO
LREF = 1290.3000 IN. YMRP = .0000 IN. YO
BREF = 1290.3000 IN. ZMRP = 375.0000 IN. ZO
SCALE = .0100

PARAMETRIC DATA

DLT-Y = .000 ALPHA = .000
BETA = 3.000 DLTALF = .000
DLTBTA = .000 MACH = 5.930
AILRON = .000 ELEVON = -20.000
GRID = 14.000

RUN NO. 435/ 0 GRADIENT INTERVAL = -5.00/ 5.00

DLT-X	DLT-Z	CN	CA	CLM	CY	CYN	CBL	XCP/L	CPB1	CPB2	CPBC
.610	18.820	-.03458	.08205	-.00869	-.03687	-.00221	-.00051	.40876	-.02523	-.02504	-.02510
.535	99.442	-.02291	.09201	.00076	-.03953	-.00157	.00006	.69307	-.02503	-.02481	-.02493
.678	200.620	-.00183	.08713	.00323	-.03851	-.00043	-.00133	.00000	-.02492	-.02463	-.02487
.642	302.040	.01147	.08592	-.00750	-.03203	-.00169	-.00010	1.31370	-.02467	-.02433	-.02465
.638	400.960	-.03204	.07926	-.01094	-.03313	-.00141	.00158	.31858	-.02446	-.02408	-.02452
.671	500.110	-.06604	.07940	-.00785	-.03372	-.00141	.00069	.54115	-.02419	-.02374	-.02432
.636	600.150	-.07113	.08041	-.00633	-.03381	-.00138	.00059	.57096	-.02373	-.02327	-.02396
	GRADIENT	.00000	.00000	.00000	.00000	.00000	.00000	.00000	.00000	.00000	.00000

AEDC VA422(IA17) ORB AND ET SEPARATING(ORB DATA) (RTR061) (24 JUL 75)

REFERENCE DATA

SREF = 2690.0000 SQ.FT. XMRP = 1089.6000 IN. XO
LREF = 1290.3000 IN. YMRP = .0000 IN. YO
BREF = 1290.3000 IN. ZMRP = 375.0000 IN. ZO
SCALE = .0100

PARAMETRIC DATA

DLT-Y = .000 ALPHA = .000
BETA = 3.000 DLTALF = -10.000
DLTBTA = .000 MACH = 5.930
AILRON = .000 ELEVON = -20.000
GRID = 14.000

RUN NO. 436/ 0 GRADIENT INTERVAL = -5.00/ 5.00

DLT-X	DLT-Z	CN	CA	CLM	CY	CYN	CBL	XCP/L	CPB1	CPB2	CPBC
.581	403.800	.12116	.08449	-.02239	-.03215	-.00142	.00050	.84482	-.02647	-.02642	-.02570
.503	501.810	.00607	.07781	-.01561	-.03237	-.00147	.00265	3.23370	-.02690	-.02685	-.02622
.528	600.170	-.05526	.07795	-.01058	-.03357	-.00145	.00081	.46889	-.02702	-.02695	-.02644
.599	750.090	-.07114	.08054	-.00639	-.03396	-.00138	.00058	.57019	-.02692	-.02687	-.02636
-.091	801.560	-.07119	.08066	-.00640	-.03395	-.00138	.00058	.57013	-.02684	-.02682	-.02627
	GRADIENT	.00000	.00000	.00000	.00000	.00000	.00000	.00000	.00000	.00000	.00000

AEDC VA422(IA17) ORB AND ET SEPARATING(ORB DATA) (RTR062) (24 JUL 75)

REFERENCE DATA

SREF = 2690.0000 SQ.FT. XMRP = 1089.6000 IN. XO
LREF = 1290.3000 IN. YMRP = .0000 IN. YO
BREF = 1290.3000 IN. ZMRP = 375.0000 IN. ZO
SCALE = .0100

PARAMETRIC DATA

DLT-Y = .000 ALPHA = .000
BETA = 3.000 DLTALF = -20.000
DLTBTA = .000 MACH = 5.930
AILRON = .000 ELEVON = -20.000
GRID = 14.000

RUN NO. 437/ 0 GRADIENT INTERVAL = -5.00/ 5.00

DLT-X	DLT-Z	CN	CA	CLM	CY	CYN	CBL	XCP/L	CPB1	CPB2	CPBC
.507	801.840	.04213	.07026	-.03152	-.03114	-.00168	.00160	1.40810	-.01974	-.02020	-.01853
.549	900.460	-.04965	.07468	-.01332	-.03363	-.00144	.00101	.39164	-.02005	-.02053	-.01894
.540	1000.200	-.07043	.07909	-.00639	-.03397	-.00142	.00058	.56925	-.02014	-.02058	-.01892
	GRADIENT	.00000	.00000	.00000	.00000	.00000	.00000	.00000	.00000	.00000	.00000

ORIGINAL PAGE IS OF POOR QUALITY

DATE 25 JUL 75 TABULATED SOURCE DATA - IA17A

AEDC VA422(IA17) ORB AND ET SEPARATING(ORB DATA) (RTR063) (24 JUL 75)

REFERENCE DATA

SREF = 2690.0000 SQ.FT. XMRP = 1089.6000 IN. XO
LREF = 1290.3000 IN. YMRP = .0000 IN. YO
BREF = 1290.3000 IN. ZMRP = 375.0000 IN. ZO
SCALE = .0100

PARAMETRIC DATA

DLT-Y = .000 ALPHA = .000
BETA = 3.000 DLTALF = .000
DLTBTA = .000 MACH = 5.930
AILRON = .000 ELEVON = -40.000
GRID = 14.000

RUN NO. 450/ 0 GRADIENT INTERVAL = -5.00/ 5.00

DLT-X	DLT-Z	CN	CA	CLM	CY	CYN	CBL	XCP/L	CPB1	CPB2	CPBC
.573	18.747	-.05856	.09646	-.00420	-.03693	-.00131	.00089	.58833	-.02653	-.02667	-.02589
.633	99.570	-.04898	.10877	.00587	-.03960	-.00036	.00180	.77994	-.02652	-.02665	-.02588
.563	200.630	-.02906	.10433	.00861	-.03873	.00046	.00005	.95619	-.02655	-.02668	-.02598
.653	302.090	-.01734	.10343	-.00192	-.03242	-.00129	.00083	.54907	-.02659	-.02669	-.02603
.562	401.000	-.05984	.09665	-.00561	-.03371	-.00104	.00255	.56619	-.02668	-.02673	-.02614
.637	500.070	-.09325	.09660	-.00259	-.03426	-.00104	.00160	.63227	-.02672	-.02675	-.02626
.646	600.090	-.09811	.09773	-.00112	-.03437	-.00101	.00151	.64856	-.02664	-.02664	-.02620
	GRADIENT	.00000	.00000	.00000	.00000	.00000	.00000	.00000	.00000	.00000	.00000

AEDC VA422(IA17) ORB AND ET SEPARATING(ORB DATA) (RTR064) (24 JUL 75)

REFERENCE DATA

SREF = 2690.0000 SQ.FT. XMRP = 1089.6000 IN. XO
LREF = 1290.3000 IN. YMRP = .0000 IN. YO
BREF = 1290.3000 IN. ZMRP = 375.0000 IN. ZO
SCALE = .0100

PARAMETRIC DATA

DLT-Y = .000 ALPHA = .000
BETA = 3.000 DLTALF = -10.000
DLTBTA = .000 MACH = 5.930
AILRON = .000 ELEVON = -40.000
GRID = 14.000

RUN NO. 451/ 0 GRADIENT INTERVAL = -5.00/ 5.00

DLT-X	DLT-Z	CN	CA	CLM	CY	CYN	CBL	XCP/L	CPB1	CPB2	CPBC
.552	403.780	.09151	.10193	-.01640	-.03345	-.00083	.00127	.83923	-.02726	-.02737	-.02623
.464	501.700	-.02170	.09521	-.01007	-.03290	-.00109	.00356	.19586	-.02792	-.02793	-.02704
.575	600.240	-.08256	.09517	-.00529	-.03417	-.00109	.00171	.59593	-.02823	-.02819	-.02747
.635	750.080	-.09831	.09789	-.00115	-.03446	-.00102	.00150	.64825	-.02827	-.02822	-.02757
-.274	801.130	-.09839	.09811	-.00116	-.03451	-.00102	.00151	.64825	-.02827	-.02821	-.02763
	GRADIENT	.00000	.00000	.00000	.00000	.00000	.00000	.00000	.00000	.00000	.00000

AEDC VA422(IA17) ORB AND ET SEPARATING(ORB DATA) (RTR065) (24 JUL 75)

REFERENCE DATA

SREF = 2690.0000 SQ.FT. XMRP = 1089.6000 IN. XO
LREF = 1290.3000 IN. YMRP = .0000 IN. YO
BREF = 1290.3000 IN. ZMRP = 375.0000 IN. ZO
SCALE = .0100

PARAMETRIC DATA

DLT-Y = .000 ALPHA = .000
BETA = 3.000 DLTALF = -20.000
DLTBTA = .000 MACH = 5.930
AILRON = .000 ELEVON = -40.000
GRID = 14.000

RUN NO. 452/ 0 GRADIENT INTERVAL = -5.00/ 5.00

DLT-X	DLT-Z	CN	CA	CLM	CY	CYN	CBL	XCP/L	CPB1	CPB2	CPBC
.524	801.760	.01285	.08787	-.02562	-.03222	-.00132	.00238	2.65380	-.02296	-.02356	-.02142
.562	900.470	-.07700	.09147	-.00804	-.03414	-.00106	.00188	.55564	-.02408	-.02463	-.02278
.525	1000.300	-.09747	.09635	-.00125	-.03440	-.00104	.00150	.64718	-.02494	-.02534	-.02372
	GRADIENT	.00000	.00000	.00000	.00000	.00000	.00000	.00000	.00000	.00000	.00000

AEDC VA422(IA17) ORB AND ET SEPARATING(ORB DATA) (RTR066) (24 JUL 75)

REFERENCE DATA

SREF = 2690.0000 SQ.FT. XMRP = 1089.6000 IN. XO
LREF = 1290.3000 IN. YMRP = .0000 IN. YO
BREF = 1290.3000 IN. ZMRP = 375.0000 IN. ZO
SCALE = .0100

PARAMETRIC DATA

DLT-Y = .000 ALPHA = .000
BETA = .000 DLTALF = .000
DLTBTA = .000 MACH = 5.930
AILRON = .000 ELEVON = -40.000
GRID = 13.000

RUN NO. 595/ 0 GRADIENT INTERVAL = -5.00/ 5.00

DLT-X	DLT-Z	CN	CA	CLM	CY	CYN	CBL	XCP/L	CPB1	CPB2	CPBC
.391	19.014	-.05254	.09798	-.00362	.00139	.00012	.00018	.60215	-.02520	-.02429	-.02462
.417	99.805	-.05464	.10881	.00592	.00168	.00035	.00028	.76828	-.02494	-.02409	-.02443
.449	200.450	-.03483	.10509	.00875	.00149	.00022	-.00025	.91127	-.02478	-.02396	-.02434
.600	302.060	-.01848	.10476	-.00298	.00155	.00018	-.00011	.48001	-.02484	-.02385	-.02424
.455	400.890	-.08071	.09727	-.00573	.00099	.00023	-.00005	.56568	-.02448	-.02372	-.02413
.481	500.120	-.09246	.09682	-.00319	.00087	.00024	-.00006	.62552	-.02438	-.02366	-.02412
.470	600.170	-.09788	.09800	-.00150	.00078	.00024	-.00006	.64465	-.02414	-.02344	-.02396
	GRADIENT	.00000	.00000	.00000	.00000	.00000	.00000	.00000	.00000	.00000	.00000

RUN NO. 596/ 0 GRADIENT INTERVAL = -5.00/ 5.00

DLT-X	DLT-Z	CN	CA	CLM	CY	CYN	CBL	XCP/L	CPB1	CPB2	CPBC
400.490	19.997	.00282	.09989	.01704	.00178	.00024	.00037	.00000	-.02713	-.02597	-.02613
400.520	97.724	-.01513	.10214	.00843	.00199	.00015	.00000	1.21740	-.02697	-.02575	-.02584
400.530	199.010	-.00308	.10274	-.00326	.00156	.00021	-.00003	.00000	-.02687	-.02558	-.02564
400.590	297.790	-.05664	.09732	-.00623	.00094	.00024	-.00001	.55004	-.02677	-.02546	-.02554
400.460	399.130	-.09208	.09672	-.00338	.00091	.00026	-.00006	.62330	-.02671	-.02541	-.02546
400.500	500.050	-.09811	.09802	-.00155	.00081	.00025	-.00006	.64420	-.02662	-.02529	-.02534
400.540	600.200	-.09812	.09817	-.00154	.00077	.00025	-.00006	.64431	-.02646	-.02513	-.02520
	GRADIENT	.00000	.00000	.00000	.00000	.00000	.00000	.00000	.00000	.00000	.00000

AEDC VA422(IA17) ORB AND ET SEPARATING(ORB DATA) (RTR067) (24 JUL 75)

REFERENCE DATA

SREF = 2690.0000 SQ.FT. XMRP = 1089.6000 IN. XO
LREF = 1290.3000 IN. YMRP = .0000 IN. YO
BREF = 1290.3000 IN. ZMRP = 375.0000 IN. ZO
SCALE = .0100

PARAMETRIC DATA

DLT-Y = .000 ALPHA = .000
BETA = .000 DLTALF = -10.000
DLTBTA = .000 MACH = 5.930
AILRON = .000 ELEVON = -40.000
GRID = 13.000

RUN NO. 597/ 0 GRADIENT INTERVAL = -5.00/ 5.00

DLT-X	DLT-Z	CN	CA	CLM	CY	CYN	CBL	XCP/L	CPB1	CPB2	CPBC
.550	403.430	.08839	.10381	-.01872	.00187	.00027	.00025	.84920	-.02604	-.02470	-.02454
.504	501.640	-.02397	.09805	-.00981	.00122	.00020	-.00002	.25080	-.02658	-.02532	-.02524
.506	600.170	-.08190	.09558	-.00578	.00097	.00024	-.00006	.58968	-.02695	-.02577	-.02575
.543	750.030	-.09797	.09800	-.00155	.00072	.00025	-.00006	.64415	-.02710	-.02598	-.02607
-.163	801.470	-.09798	.09810	-.00152	.00088	.00027	-.00006	.64453	-.02708	-.02593	-.02604
	GRADIENT	.00000	.00000	.00000	.00000	.00000	.00000	.00000	.00000	.00000	.00000

RUN NO. 598/ 0 GRADIENT INTERVAL = -5.00/ 5.00

DLT-X	DLT-Z	CN	CA	CLM	CY	CYN	CBL	XCP/L	CPB1	CPB2	CPBC
400.450	396.630	-.02724	.09548	-.01043	.00128	.00020	.00000	.27725	-.02250	-.02118	-.02030
400.500	498.630	-.08417	.09539	-.00528	.00087	.00024	-.00006	.59728	-.02173	-.02044	-.01964
400.440	600.150	-.09727	.09751	-.00156	.00078	.00026	-.00006	.64393	-.02160	-.02033	-.01971
400.540	750.330	-.09740	.09807	-.00158	.00082	.00026	-.00006	.64376	-.02238	-.02118	-.02093
400.460	800.150	-.09762	.09812	-.00156	.00076	.00026	-.00005	.64398	-.02286	-.02170	-.02157
	GRADIENT	.00000	.00000	.00000	.00000	.00000	.00000	.00000	.00000	.00000	.00000

AEDC VA422(IA17) ORB AND ET SEPARATING(ORB DATA) (RTR069) (24 JUL 75)

REFERENCE DATA

SREF = 2690.0000 SQ.FT. XMRP = 1089.6000 IN. XO
LREF = 1290.3000 IN. YMRP = .0000 IN. YO
BREF = 1290.3000 IN. ZMRP = 375.0000 IN. ZO
SCALE = .0100

PARAMETRIC DATA

DLT-Y = .000 ALPHA = .000
BETA = .000 DLTALF = -20.000
DLTBTA = .000 MACH = 5.930
AILRON = .000 ELEVON = -40.000
GRID = 13.000

RUN NO. 600/ 0 GRADIENT INTERVAL = -5.00/ 5.00

DLT-X	DLT-Z	CN	CA	CLM	CY	CYN	CBL	XCP/L	CPB1	CPB2	CPBC
.440	801.820	.01333	.08862	-.02543	.00170	-.00002	-.00003	2.56790	-.01457	-.01372	-.01266
.421	900.440	-.07990	.09162	-.00714	.00076	.00025	-.00003	.57064	-.01466	-.01382	-.01270
.399	1000.300	-.09666	.09533	-.00159	.00084	.00027	-.00006	.64353	-.01442	-.01359	-.01235
	GRADIENT	.00000	.00000	.00000	.00000	.00000	.00000	.00000	.00000	.00000	.00000

AEDC VA422(IA17) ORB AND ET SEPARATING(ORB DATA) (RTR069) (24 JUL 75)

REFERENCE DATA

SREF = 2690.0000 SQ.FT. XMRP = 1089.6000 IN. XO
LREF = 1290.3000 IN. YMRP = .0000 IN. YO
BREF = 1290.3000 IN. ZMRP = 375.0000 IN. ZO
SCALE = .0100

PARAMETRIC DATA

DLT-Y = .000 ALPHA = .000
BETA = .000 DLTALF = -20.000
DLTBTA = .000 MACH = 5.930
AILRON = .000 ELEVON = -40.000
GRID = 13.000

RUN NO. 599/ 0 GRADIENT INTERVAL = -5.00/ 5.00

DLT-X	DLT-Z	CN	CA	CLM	CY	CYN	CBL	XCP/L	CPB1	CPB2	CPBC
400.330	750.290	-.09653	.09291	-.00175	.00069	.00026	-.00006	.64190	-.02352	-.02226	-.02131
400.250	800.190	-.09691	.09406	-.00167	.00071	.00027	-.00006	.64278	-.02553	-.02432	-.02402
400.350	900.360	-.09704	.09538	-.00160	.00074	.00028	-.00006	.64352	-.02625	-.02521	-.02533
400.330	1000.300	-.09715	.09793	-.00157	.00089	.00028	-.00006	.64380	-.02611	-.02508	-.02523
	GRADIENT	.00000	.00000	.00000	.00000	.00000	.00000	.00000	.00000	.00000	.00000

AEDC VA422(IA17) ORB AND ET SEPARATING(ORB DATA) (RTR070) (24 JUL 75)

REFERENCE DATA

SREF = 2690.0000 SQ.FT. XMRP = 1089.6000 IN. XO
LREF = 1290.3000 IN. YMRP = .0000 IN. YO
BREF = 1290.3000 IN. ZMRP = 375.0000 IN. ZO
SCALE = .0100

PARAMETRIC DATA

DLT-Y = .000 ALPHA = 5.000
BETA = .000 DLTALF = .000
DLTBTA = .000 MACH = 5.930
AILRON = .000 ELEVON = -40.000
GRID = 12.000

RUN NO. 608/ 0 GRADIENT INTERVAL = -5.00/ 5.00

DLT-X	DLT-Z	CN	CA	CLM	CY	CYN	CBL	XCP/L	CPB1	CPB2	CPBC
.555	19.457	.00654	.07163	-.00668	.00024	-.00039	.00011	1.68030	-.02609	-.02541	-.02575
.632	98.375	.00895	.08521	.00087	.00043	-.00005	.00027	.56300	-.02559	-.02493	-.02527
.624	199.190	.02734	.08567	.01585	.00085	.00015	-.00013	.08015	-.02506	-.02442	-.02481
.636	300.100	.07236	.08941	.00773	.00066	.00016	-.00016	.55313	-.02452	-.02389	-.02429
.612	402.150	.10341	.08722	-.00511	.00115	-.00005	-.00008	.70942	-.02395	-.02329	-.02372
.566	500.950	.04698	.07933	-.00541	.00077	.00006	.00001	.77509	-.02345	-.02279	-.02324
.628	597.970	.01226	.07966	-.00187	.00060	.00004	-.00006	.81274	-.02296	-.02228	-.02282
	GRADIENT	.00000	.00000	.00000	.00000	.00000	.00000	.00000	.00000	.00000	.00000

RUN NO. 609/ 0 GRADIENT INTERVAL = -5.00/ 5.00

DLT-X	DLT-Z	CN	CA	CLM	CY	CYN	CBL	XCP/L	CPB1	CPB2	CPBC
400.470	20.016	.05635	.08531	.02054	.00143	.00001	.00027	.29553	-.02815	-.02750	-.02770
400.480	98.324	.05165	.08660	.01465	.00083	.00012	-.00003	.37630	-.02817	-.02747	-.02764
400.450	200.020	.10106	.08980	.00289	.00118	.00002	-.00020	.63142	-.02825	-.02751	-.02766
400.440	298.860	.09264	.08152	-.00590	.00090	.00004	-.00000	.73446	-.02835	-.02759	-.02772
400.480	398.050	.03212	.07903	-.00453	.00065	.00004	-.00006	.80088	-.02851	-.02772	-.02783
400.460	499.510	.00761	.08006	-.00063	.00063	.00007	-.00006	.74336	-.02861	-.02781	-.02787
400.550	599.830	.00618	.08092	-.00007	.00055	.00006	-.00006	.67169	-.02860	-.02779	-.02777
	GRADIENT	.00000	.00000	.00000	.00000	.00000	.00000	.00000	.00000	.00000	.00000

ORIGINAL PAGE IS OF POOR QUALITY

AEDC VA422(IA17) ORB AND ET SEPARATING(ORB DATA) (RTR071) (24 JUL 75)

REFERENCE DATA

SREF = 2690.0000 SQ.FT. XMRP = 1089.6000 IN. XO
LREF = 1290.3000 IN. YMRP = .0000 IN. YO
BREF = 1290.3000 IN. ZMRP = 375.0000 IN. ZO
SCALE = .0100

PARAMETRIC DATA

DLT-Y = .000 ALPHA = 5.000
BETA = .000 DLTALF = -10.000
DLTBTA = .000 MACH = 5.930
AILRON = .000 ELEVON = -40.000
GRID = 12.000

RUN NO. 610/ 0 GRADIENT INTERVAL = -5.00/ 5.00

DLT-X	DLT-Z	CN	CA	CLM	CY	CYN	CBL	XCP/L	CPB1	CPB2	CPBC
.505	401.010	.14464	.08913	.00179	.00116	.00013	.00011	.64765	-.02862	-.02790	-.02758
.491	502.650	.14763	.08908	-.00846	.00129	-.00004	.00002	.71733	-.02875	-.02792	-.02770
.525	601.580	.07393	.07890	-.00899	.00085	.00003	.00025	.78164	-.02888	-.02803	-.02785
.455	750.070	.00873	.07957	-.00078	.00048	.00008	-.00006	.74903	-.02917	-.02835	-.02828
-.547	802.760	.00673	.08041	-.00007	.00042	.00006	-.00006	.66967	-.02920	-.02840	-.02834
	GRADIENT	.00000	.00000	.00000	.00000	.00000	.00000	.00000	.00000	.00000	.00000

RUN NO. 611/ 0 GRADIENT INTERVAL = -5.00/ 5.00

DLT-X	DLT-Z	CN	CA	CLM	CY	CYN	CBL	XCP/L	CPB1	CPB2	CPBC
400.460	398.240	.13244	.08107	-.01175	.00100	.00005	.00011	.74875	-.02751	-.02662	-.02606
400.480	497.730	.04813	.07825	-.00638	.00072	.00005	.00002	.79257	-.02707	-.02621	-.02565
400.520	599.220	.01090	.07918	-.00162	.00052	.00008	-.00005	.80901	-.02695	-.02608	-.02558
400.520	750.130	.00649	.08070	-.00014	.00046	.00008	-.00006	.68084	-.02692	-.02606	-.02558
400.680	800.210	.00672	.08074	-.00008	.00041	.00006	-.00006	.67208	-.02712	-.02629	-.02592
	GRADIENT	.00000	.00000	.00000	.00000	.00000	.00000	.00000	.00000	.00000	.00000

AEDC VA422(IA17) ORB AND ET SEPARATING(ORB DATA) (RTR073) (24 JUL 75)

REFERENCE DATA

SREF = 2690.0000 SQ.FT. XMRP = 1089.6000 IN. XO
LREF = 1290.3000 IN. YMRP = .0000 IN. YO
BREF = 1290.3000 IN. ZMRP = 375.0000 IN. ZO
SCALE = .0100

PARAMETRIC DATA

DLT-Y = .000 ALPHA = 5.000
BETA = .000 DLTALF = -20.000
DLTBTA = .000 MACH = 5.930
AILRON = .000 ELEVON = -40.000
GRID = 12.000

RUN NO. 613/ 0 GRADIENT INTERVAL = -5.00/ 5.00

DLT-X	DLT-Z	CN	CA	CLM	CY	CYN	CBL	XCP/L	CPB1	CPB2	CPBC
.391	801.380	.10521	.07286	-.02375	.00140	-.00011	.00017	.88571	-.02556	-.02484	-.02407
.469	900.160	.01526	.07701	-.00279	.00057	.00006	-.00001	.84303	-.02618	-.02541	-.02430
.431	1000.100	.00728	.07945	-.00007	.00045	.00007	-.00006	.66930	-.02634	-.02554	-.02495
	GRADIENT	.00000	.00000	.00000	.00000	.00000	.00000	.00000	.00000	.00000	.00000

AEDC VA422(IA17) ORB AND ET SEPARATING(ORB DATA) (RTR073) (24 JUL 75)

REFERENCE DATA

SREF = 2690.0000 SQ.FT. XMRP = 1089.6000 IN. XO
LREF = 1290.3000 IN. YMRP = .0000 IN. YO
BREF = 1290.3000 IN. ZMRP = 375.0000 IN. ZO
SCALE = .0100

PARAMETRIC DATA

DLT-Y = .000 ALPHA = 5.000
BETA = .000 DLTALF = -20.000
DLTBTA = .000 MACH = 5.930
AILRON = .000 ELEVON = -40.000
GRID = 12.000

RUN NO. 812/ 0 GRADIENT INTERVAL = -5.00/ 5.00

DLT-X	DLT-Z	CN	CA	CLM	CY	CYN	CBL	XCP/L	CPB1	CPB2	CPBC
400.570	750.220	.01135	.07816	-.00146	.00038	.00007	-.00005	.78894	-.02938	-.02858	-.02845
400.500	800.120	.00709	.07953	-.00007	.00050	.00004	-.00006	.66951	-.02948	-.02870	-.02863
400.420	900.150	.00694	.08045	-.00009	.00046	.00006	-.00006	.67342	-.02942	-.02864	-.02857
400.580	1000.200	.00672	.08053	-.00012	.00044	.00006	-.00006	.67798	-.02929	-.02853	-.02844
	GRADIENT	.00000	.00000	.00000	.00000	.00000	.00000	.00000	.00000	.00000	.00000

AEDC VA422(IA17) ORB AND ET SEPARATING(ORB DATA) (RTR074) (24 JUL 75)

REFERENCE DATA

SREF = 2690.0000 SQ.FT. XMRP = 1089.6000 IN. XO
LREF = 1290.3000 IN. YMRP = .0000 IN. YO
BREF = 1290.3000 IN. ZMRP = 375.0000 IN. ZO
SCALE = .0100

PARAMETRIC DATA

DLT-Y = .000 ALPHA = -5.000
BETA = .000 DLTALF = .000
DLTBTA = .000 MACH = 5.930
AILRON = .000 ELEVON = -40.000
GRID = 11.000

RUN NO. 621/ 0 GRADIENT INTERVAL = -5.00/ 5.00

DLT-X	DLT-Z	CN	CA	CLM	CY	CYN	CBL	XCP/L	CPB1	CPB2	CPBC
.531	19.386	-.12967	.13210	.00283	.00316	.00002	.00031	.68181	-.02413	-.02230	-.02242
.485	101.480	-.11323	.13188	.00780	.00223	.00042	.00029	.72867	-.02432	-.02243	-.02260
.528	201.740	-.13777	.13432	.00519	.00186	-.00003	-.00002	.69765	-.02445	-.02254	-.02285
.444	301.320	-.16857	.12782	-.00099	.00221	-.00002	.00013	.65412	-.02439	-.02252	-.02291
.627	400.170	-.20290	.12721	-.00085	.00195	-.00002	.00008	.65579	-.02425	-.02237	-.02286
.466	500.230	-.21113	.12812	.00125	.00177	-.00003	.00008	.66594	-.02390	-.02204	-.02266
.491	600.130	-.21115	.12834	.00123	.00178	-.00002	.00008	.66585	-.02341	-.02160	-.02228
	GRADIENT	.00000	.00000	.00000	.00000	.00000	.00000	.00000	.00000	.00000	.00000

RUN NO. 622/ 0 GRADIENT INTERVAL = -5.00/ 5.00

DLT-X	DLT-Z	CN	CA	CLM	CY	CYN	CBL	XCP/L	CPB1	CPB2	CPBC
400.470	24.066	-.08441	.12815	.01932	.00206	.00024	.00060	.88890	-.02581	-.02389	-.02373
400.420	100.170	-.11522	.13511	.00842	.00228	-.00002	-.00007	.73312	-.02495	-.02298	-.02271
400.400	197.820	-.15020	.12834	-.00025	.00205	-.00002	.00016	.65832	-.02458	-.02266	-.02241
400.400	298.210	-.19236	.12672	-.00245	.00196	-.00004	.00009	.64727	-.02456	-.02266	-.02243
400.480	400.030	-.21069	.12748	.00121	.00182	-.00001	.00007	.66573	-.02456	-.02262	-.02240
400.430	500.200	-.21073	.12815	.00127	.00174	-.00001	.00008	.66602	-.02454	-.02259	-.02240
400.460	600.200	-.21113	.12823	.00126	.00193	-.00001	.00008	.66598	-.02477	-.02282	-.02268
	GRADIENT	.00000	.00000	.00000	.00000	.00000	.00000	.00000	.00000	.00000	.00000

AEDC VA422(1A17) ORB AND ET SEPARATING(ORB DATA) (RTR075) (24 JUL 75)

REFERENCE DATA

SREF = 2690.0000 SQ.FT. XMRP = 1089.6000 IN. XO
LREF = 1290.3000 IN. YMRP = .0000 IN. YO
BREF = 1290.3000 IN. ZMRP = 375.0000 IN. ZO
SCALE = .0100

PARAMETRIC DATA

DLT-Y = .000 ALPHA = -5.000
BETA = .000 DLTALF = -10.000
DLTBTA = .000 MACH = 5.930
AILRON = .000 ELEVON = -40.000
GRID = 11.000

RUN NO. 623/ 0 GRADIENT INTERVAL = -5.00/ 5.00

DLT-X	DLT-Z	CN	CA	CLM	CY	CYN	CBL	XCP/L	CPB1	CPB2	CPBC
.522	403.880	-.03248	.12366	-.02117	.00282	-.00029	.00050	.00824	-.02406	-.02173	-.02071
.429	500.940	-.16155	.12099	-.01114	.00214	-.00008	.00025	.59107	-.02611	-.02373	-.02326
.453	600.360	-.20955	.12630	.00104	.00188	-.00001	.00008	.66498	-.02699	-.02462	-.02442
.433	750.160	-.21103	.12825	.00126	.00173	-.00001	.00008	.66598	-.02709	-.02482	-.02473
.085	800.290	-.21124	.12816	.00127	.00186	-.00002	.00008	.66600	-.02698	-.02473	-.02464
	GRADIENT	.00000	.00000	.00000	.00000	.00000	.00000	.00000	.00000	.00000	.00000

RUN NO. 624/ 0 GRADIENT INTERVAL = -5.00/ 5.00

DLT-X	DLT-Z	CN	CA	CLM	CY	CYN	CBL	XCP/L	CPB1	CPB2	CPBC
400.530	397.080	-.16863	.12389	-.00701	.00198	-.00006	.00001	.51844	-.01789	-.01607	-.01422
400.430	499.620	-.20789	.12617	.00044	.00187	-.00002	.00007	.66212	-.01704	-.01538	-.01380
400.360	599.970	-.21006	.12781	.00125	.00167	-.00002	.00008	.66594	-.01732	-.01580	-.01465
400.430	750.190	-.21022	.12806	.00120	.00191	-.00001	.00008	.66570	-.01926	-.01776	-.01720
400.380	800.250	-.21057	.12816	.00120	.00182	-.00001	.00008	.66571	-.02028	-.01873	-.01836
	GRADIENT	.00000	.00000	.00000	.00000	.00000	.00000	.00000	.00000	.00000	.00000

AEDC VA422(1A17) ORB AND ET SEPARATING(ORB DATA) (RTR077) (24 JUL 75)

REFERENCE DATA

SREF = 2690.0000 SQ.FT. XMRP = 1089.6000 IN. XO
LREF = 1290.3000 IN. YMRP = .0000 IN. YO
BREF = 1290.3000 IN. ZMRP = 375.0000 IN. ZO
SCALE = .0100

PARAMETRIC DATA

DLT-Y = .000 ALPHA = -5.000
BETA = .000 DLTALF = -20.000
DLTBTA = .000 MACH = 5.930
AILRON = .000 ELEVON = -40.000
GRID = 11.000

RUN NO. 826/ 0 GRADIENT INTERVAL = -5.00/ 5.00

DLT-X	DLT-Z	CN	CA	CLM	CY	CYN	CBL	XCP/L	CPB1	CPB2	CPBC
.441	804.450	-.02119	.12054	-.02316	.00387	-.00053	.00138	-.43272	-.00693	-.00579	-.00476
.403	900.810	-.18585	.11884	-.01103	.00230	-.00009	.00034	.59348	-.00614	-.00504	-.00389
.477	1000.300	-.20946	.12501	.00110	.00163	.00000	.00009	.66524	-.00449	-.00346	-.00210
	GRADIENT	.00000	.00000	.00000	.00000	.00000	.00000	.00000	.00000	.00000	.00000

AEDC VA422(IA17) ORB AND ET SEPARATING(ORB DATA) (RTR077) (24 JUL 75)

REFERENCE DATA

SREF = 2690.0000 SQ.FT. XMRP = 1089.6000 IN. XO
LREF = 1290.3000 IN. YMRP = .0000 IN. YO
BREF = 1290.3000 IN. ZMRP = 375.0000 IN. ZO
SCALE = .0100

PARAMETRIC DATA

DLT-Y = .000 ALPHA = -5.000
BETA = .000 DLTALF = -20.000
DLTBTA = .000 MACH = 5.930
AILRON = .000 ELEVON = -40.000
GRID = 11.000

RUN NO. 625/ 0 GRADIENT INTERVAL = -5.00/ 5.00

DLT-X	DLT-Z	CN	CA	CLM	CY	CYN	CBL	XCP/L	CPB1	CPB2	CPBC
400.420	750.960	-.16832	.11289	-.00707	.00258	.00015	.00091	.61798	-.01652	-.01413	-.01124
400.490	800.510	-.20253	.11830	-.00041	.00180	.00000	.00009	.65796	-.02364	-.02122	-.01998
400.380	900.320	-.20899	.12442	.00093	.00175	.00002	.00008	.66447	-.02585	-.02369	-.02356
400.420	1000.400	-.21028	.12774	.00126	.00177	-.00001	.00009	.66600	-.02581	-.02375	-.02372
	GRADIENT	.00000	.00000	.00000	.00000	.00000	.00000	.00000	.00000	.00000	.00000

AEDC VA422(IA17) ORB AND ET SEPARATING(ORB DATA) (RTR078) (24 JUL 75)

REFERENCE DATA

SREF = 2690.0000 SQ.FT. XMRP = 1089.6000 IN. XO
LREF = 1290.3000 IN. YMRP = .0000 IN. YO
BREF = 1290.3000 IN. ZMRP = 375.0000 IN. ZO
SCALE = .0100

PARAMETRIC DATA

DLT-Y = .000 ALPHA = -10.000
BETA = .000 DLTALF = .000
DLTBTA = .000 MACH = 5.930
AILRON = .000 ELEVON = -40.000
GRID = 10.000

RUN NO. 634/ 0 GRADIENT INTERVAL = -5.00/ 5.00

DLT-X	DLT-Z	CN	CA	CLM	CY	CYN	CBL	XCP/L	CPB1	CPB2	CPBC
.415	31.183	-.17492	.16080	.00735	.00487	.00049	.00048	.70200	-.02068	-.01858	-.01635
.588	102.620	-.20080	.15784	.00923	.00247	.00028	.00024	.70595	-.02157	-.01955	-.01701
.508	202.190	-.24768	.14923	.00241	.00178	.00003	-.00031	.66974	-.02310	-.02117	-.01852
.389	300.650	-.28758	.14864	-.00143	.00181	.00003	-.00029	.65504	-.02401	-.02222	-.01964
.406	400.140	-.30505	.14952	.00124	.00167	.00004	-.00029	.66406	-.02431	-.02261	-.02015
.596	500.300	-.30534	.15029	.00136	.00174	.00004	-.00028	.66447	-.02427	-.02260	-.02017
	GRADIENT	.00000	.00000	.00000	.00000	.00000	.00000	.00000	.00000	.00000	.00000

RUN NO. 635/ 0 GRADIENT INTERVAL = -5.00/ 5.00

DLT-X	DLT-Z	CN	CA	CLM	CY	CYN	CBL	XCP/L	CPB1	CPB2	CPBC
400.490	31.587	-.17685	.15838	.02081	.00204	.00028	.00018	.77770	-.02118	-.01911	-.01639
400.430	97.783	-.19662	.15323	.00786	.00257	.00022	.00008	.70000	-.01973	-.01757	-.01500
400.520	197.220	-.25767	.14859	-.00101	.00192	.00004	-.00031	.65610	-.01826	-.01604	-.01382
400.430	298.840	-.29622	.14815	-.00068	.00180	.00001	-.00028	.65769	-.01764	-.01545	-.01352
400.420	399.780	-.30481	.14974	.00122	.00166	.00004	-.00029	.66400	-.01745	-.01536	-.01366
400.430	500.100	-.30507	.15005	.00135	.00165	.00004	-.00028	.66444	-.01802	-.01604	-.01451
	GRADIENT	.00000	.00000	.00000	.00000	.00000	.00000	.00000	.00000	.00000	.00000

AEDC VA422(IA17) ORB AND ET SEPARATING(ORB DATA) (RTR079) (24 JUL 75)

REFERENCE DATA

SREF = 2690.0000 SQ.FT. XMRP = 1089.6000 IN. XO
LREF = 1290.3000 IN. YMRP = .0000 IN. YO
BREF = 1290.3000 IN. ZMRP = 375.0000 IN. ZO
SCALE = .0100

PARAMETRIC DATA

DLT-Y = .000 ALPHA = -10.000
BETA = .000 DLTALF = -10.000
DLTBTA = .000 MACH = 5.930
AILRON = .000 ELEVON = -40.000
GRID = 10.000

RUN NO. 636/ 0 GRADIENT INTERVAL = -5.00/ 5.00

DLT-X	DLT-Z	CN	CA	CLM	CY	CYN	CBL	XCP/L	CPB1	CPB2	CPBC
.428	403.290	-.12822	.14445	-.02322	.00346	-.00020	.00146	.47890	-.01520	-.01335	-.01043
.370	501.650	-.21226	.13883	-.01908	.00294	-.00022	-.00013	.57011	-.01826	-.01610	-.01293
.407	600.420	-.29105	.14307	-.00230	.00187	.00006	-.00004	.65212	-.02211	-.02018	-.01765
.393	700.270	-.30417	.14886	.00108	.00166	.00004	-.00028	.66356	-.02292	-.02117	-.01899
.523	799.800	-.30550	.15010	.00133	.00176	.00004	-.00028	.66435	-.02288	-.02119	-.01921
	GRADIENT	.00000	.00000	.00000	.00000	.00000	.00000	.00000	.00000	.00000	.00000

RUN NO. 637/ 0 GRADIENT INTERVAL = -5.00/ 5.00

DLT-X	DLT-Z	CN	CA	CLM	CY	CYN	CBL	XCP/L	CPB1	CPB2	CPBC
400.350	397.450	-.25252	.14278	-.00980	.00202	.00002	-.00015	.62119	-.00598	-.00416	-.00120
400.240	499.400	-.30148	.14642	.00060	.00174	.00001	-.00026	.66200	-.00427	-.00246	-.00014
400.240	600.180	-.30256	.14801	.00098	.00163	.00003	-.00028	.66322	-.00492	-.00319	-.00178
400.330	700.270	-.30410	.14973	.00124	.00152	.00002	-.00028	.66408	-.00704	-.00549	-.00462
400.390	800.120	-.30434	.14987	.00129	.00171	.00002	-.00029	.66425	-.00975	-.00828	-.00767
	GRADIENT	.00000	.00000	.00000	.00000	.00000	.00000	.00000	.00000	.00000	.00000

AEDC VA422(IA17) ORB AND ET SEPARATING(ORB DATA) (RTR080) (24 JUL 75)

REFERENCE DATA

SREF = 2690.0000 SQ.FT. XMRP = 1089.6000 IN. XO
LREF = 1290.3000 IN. YMRP = .0000 IN. YO
BREF = 1290.3000 IN. ZMRP = 375.0000 IN. ZO
SCALE = .0100

PARAMETRIC DATA

DLT-Y = .000 ALPHA = .000
BETA = 3.000 DLTALF = .000
DLTBTA = .000 MACH = 5.930
AILRON = 15.000 ELEVON = .000
GRID = 14.000

RUN NO. 462/ 0 GRADIENT INTERVAL = -5.00/ 5.00

DLT-X	DLT-Z	CN	CA	CLM	CY	CYN	CBL	XCP/L	CPB1	CPB2	CPBC
.531	18.931	-.02074	.08271	-.01274	-.03829	-.00237	.00125	.04580	-.02604	-.02599	-.02597
.636	99.553	-.00881	.09142	-.00363	-.04179	-.00219	.00194	.24787	-.02598	-.02587	-.02593
.592	200.480	.01454	.08679	-.00173	-.04024	-.00072	.00117	.77922	-.02592	-.02574	-.02595
.519	301.990	.03284	.08614	-.01388	-.03282	-.00228	.00332	1.08280	-.02579	-.02560	-.02587
.515	401.030	-.01046	.08033	-.01747	-.03420	-.00198	.00499	-1.01100	-.02566	-.02545	-.02579
.620	500.150	-.04994	.07896	-.01232	-.03515	-.00155	.00299	.41325	-.02553	-.02530	-.02575
.734	597.020	-.05525	.07990	-.01085	-.03551	-.00148	.00290	.46361	-.02533	-.02507	-.02561
	GRADIENT	.00000	.00000	.00000	.00000	.00000	.00000	.00000	.00000	.00000	.00000

ORIGINAL PAGE IS OF POOR QUALITY

AEDC VA422(IA17) ORB AND ET SEPARATING(ORB DATA) (RTR081) (24 JUL 75)

REFERENCE DATA

SREF = 2690.0000 SQ.FT. XMRP = 1089.6000 IN. XO
LREF = 1290.3000 IN. YMRP = .0000 IN. YO
BREF = 1290.3000 IN. ZMRP = 375.0000 IN. ZO
SCALE = .0100

PARAMETRIC DATA

DLT-Y = .000 ALPHA = .000
BETA = 3.000 DLTALF = -10.000
DLTBTA = .000 MACH = 5.930
AILRON = 15.000 ELEVON = .000
GRID = 14.000

RUN NO. 463/ 0 GRADIENT INTERVAL = -5.00/ 5.00

DLT-X	DLT-Z	CN	CA	CLM	CY	CYN	CBL	XCP/L	CPB1	CPB2	CPBC
.562	403.700	.15024	.08748	-.03172	-.03296	-.00242	.00509	.87113	-.02695	-.02669	-.02611
.571	501.630	.03056	.08060	-.02367	-.03302	-.00243	.00692	1.43460	-.02728	-.02703	-.02654
.564	600.250	-.03816	.07798	-.01506	-.03493	-.00163	.00327	.26541	-.02746	-.02725	-.02684
.612	750.090	-.05492	.07988	-.01083	-.03550	-.00147	.00289	.46274	-.02756	-.02734	-.02703
-.253	802.070	-.05491	.07991	-.01081	-.03552	-.00145	.00288	.46315	-.02759	-.02736	-.02703
	GRADIENT	.00000	.00000	.00000	.00000	.00000	.00000	.00000	.00000	.00000	.00000

AEDC VA422(IA17) ORB AND ET SEPARATING(ORB DATA) (RTR082) (24 JUL 75)

REFERENCE DATA

SREF = 2690.0000 SQ.FT. XMRP = 1089.6000 IN. XO
LREF = 1290.3000 IN. YMRP = .0000 IN. YO
BREF = 1290.3000 IN. ZMRP = 375.0000 IN. ZO
SCALE = .0100

PARAMETRIC DATA

DLT-Y = .000 ALPHA = .000
BETA = 3.000 DLTALF = -20.000
DLTBTA = .000 MACH = 5.930
AILRON = 15.000 ELEVON = .000
GRID = 14.000

RUN NO. 464/ 0 GRADIENT INTERVAL = -5.00/ 5.00

DLT-X	DLT-Z	CN	CA	CLM	CY	CYN	CBL	XCP/L	CPB1	CPB2	CPBC
.514	801.770	.07012	.08229	-.04245	-.03868	-.00227	.00808	1.26540	-.01840	-.01831	-.01689
.565	900.440	-.04094	.08334	-.01840	-.03908	-.00174	.00310	.21052	-.01895	-.01881	-.01735
.531	1000.300	-.06072	.08778	-.01208	-.03975	-.00168	.00321	.46110	-.01906	-.01882	-.01729
	GRADIENT	.00000	.00000	.00000	.00000	.00000	.00000	.00000	.00000	.00000	.00000

AEDC VA422(IA17) ORB AND ET SEPARATING(ORB DATA) (RTR083) (24 JUL 75)

REFERENCE DATA

SREF = 2690.0000 SQ.FT. XMRP = 1089.6000 IN. XO
LREF = 1290.3000 IN. YMRP = .0000 IN. YO
BREF = 1290.3000 IN. ZMRP = 375.0000 IN. ZO
SCALE = .0100

PARAMETRIC DATA

DLT-Y = .000 ALPHA = .000
BETA = .000 DLTALF = .000
DLTBTA = .000 MACH = 5.930
AILRON = 15.000 ELEVON = .000
GRID = 13.000

RUN NO. 469/ 0 GRADIENT INTERVAL = -5.00/ 5.00

DLT-X	DLT-Z	CN	CA	CLM	CY	CYN	CBL	XCP/L	CPB1	CPB2	CPBC
.443	18.984	-.02034	.08321	-.01251	.00053	-.00011	.00263	.04476	-.02542	-.02669	-.02620
.520	99.559	-.00944	.09078	-.00350	.00057	.00013	.00304	.28871	-.02629	-.02661	-.02616
.531	200.450	.01669	.08684	-.00262	.00073	-.00016	.00310	.81712	-.02628	-.02663	-.02625
.459	302.010	.04105	.08569	-.01585	.00066	-.00025	.00399	1.04600	-.02611	-.02652	-.02614
.470	400.890	-.00636	.07821	-.01805	.00023	-.00008	.00359	-2.17810	-.02596	-.02644	-.02609
.528	500.150	-.04469	.07685	-.01331	.00002	.00027	.00255	.36218	-.02587	-.02640	-.02612
.504	600.130	-.04971	.07784	-.01180	-.00024	.00033	.00261	.42267	-.02559	-.02609	-.02586
	GRADIENT	.00000	.00000	.00000	.00000	.00000	.00000	.00000	.00000	.00000	.00000

RUN NO. 470/ 0 GRADIENT INTERVAL = -5.00/ 5.00

DLT-X	DLT-Z	CN	CA	CLM	CY	CYN	CBL	XCP/L	CPB1	CPB2	CPBC
400.530	19.913	.04505	.08544	.00773	.00115	.00003	.00315	.48832	-.02852	-.02841	-.02789
400.500	97.901	.03504	.08460	-.00274	.00112	-.00022	.00343	.73815	-.02821	-.02793	-.02739
400.540	198.970	.05309	.08360	-.01623	.00138	-.00039	.00433	.96562	-.02788	-.02752	-.02697
400.470	297.780	-.00188	.07832	-.01872	.00027	-.00008	.00366	.00000	-.02775	-.02739	-.02686
400.500	399.100	-.04471	.07675	-.01342	-.00008	.00030	.00254	.35992	-.02770	-.02735	-.02682
400.430	500.070	-.04999	.07771	-.01179	-.00026	.00033	.00260	.42417	-.02769	-.02729	-.02675
400.470	600.160	-.04986	.07800	-.01183	-.00031	.00033	.00260	.42274	-.02762	-.02727	-.02671
	GRADIENT	.00000	.00000	.00000	.00000	.00000	.00000	.00000	.00000	.00000	.00000

AEDC VA422(IA17) ORB AND ET SEPARATING(ORB DATA) (RTR084) (24 JUL 75)

REFERENCE DATA

SREF = 2690.0000 SQ.FT. XMRP = 1089.6000 IN. XO
LREF = 1290.3000 IN. YMRP = .0000 IN. YO
BREF = 1290.3000 IN. ZMRP = 375.0000 IN. ZO
SCALE = .0100

PARAMETRIC DATA

DLT-Y = .000 ALPHA = .000
BETA = .000 DLTALF = -10.000
DLTBTA = .000 MACH = 5.930
AILRON = 15.000 ELEVON = .000
GRID = 13.000

RUN NO. 471/ 0 GRADIENT INTERVAL = -5.00/ 5.00

DLT-X	DLT-Z	CN	CA	CLM	CY	CYN	CBL	XCP/L	CPB1	CPB2	CPBC
.586	403.580	.15534	.08723	-.03288	.00139	-.00078	.00574	.87166	-.02755	-.02766	-.02670
.476	501.670	.03798	.07851	-.02416	.00083	-.00049	.00463	1.29520	-.02788	-.02817	-.02726
.540	600.310	-.03292	.07567	-.01613	-.00006	.00027	.00262	.16985	-.02816	-.02857	-.02770
.603	750.020	-.04994	.07773	-.01180	-.00037	.00034	.00260	.42373	-.02826	-.02869	-.02790
-.150	802.260	-.04976	.07782	-.01179	-.00036	.00034	.00260	.42316	-.02821	-.02863	-.02785
	GRADIENT	.00000	.00000	.00000	.00000	.00000	.00000	.00000	.00000	.00000	.00000

RUN NO. 472/ 0 GRADIENT INTERVAL = -5.00/ 5.00

DLT-X	DLT-Z	CN	CA	CLM	CY	CYN	CBL	XCP/L	CPB1	CPB2	CPBC
400.410	396.820	.03383	.07756	-.02465	.00071	-.00041	.00458	1.38850	-.02445	-.02388	-.02258
400.410	498.550	-.03622	.07576	-.01547	-.00020	.00030	.00254	.23289	-.02369	-.02303	-.02186
400.450	600.170	-.04906	.07747	-.01183	-.00032	.00034	.00260	.41888	-.02358	-.02289	-.02188
400.470	750.320	-.04948	.07790	-.01187	-.00031	.00034	.00260	.42014	-.02410	-.02362	-.02286
400.490	800.140	-.04951	.07793	-.01182	-.00044	.00036	.00260	.42124	-.02446	-.02411	-.02342
	GRADIENT	.00000	.00000	.00000	.00000	.00000	.00000	.00000	.00000	.00000	.00000

AEDC VA422(IA17) ORB AND ET SEPARATING(ORB DATA) (RTR086) (24 JUL 75)

REFERENCE DATA

SREF = 2690.0000 SQ.FT. XMRP = 1089.6000 IN. XO
LREF = 1290.3000 IN. YMRP = .0000 IN. YO
BREF = 1290.3000 IN. ZMRP = 375.0000 IN. ZO
SCALE = .0100

PARAMETRIC DATA

DLT-Y = .000 ALPHA = .000
BETA = .000 DLTALF = -20.000
DLTBTA = .000 MACH = 5.930
AILRON = 15.000 ELEVON = .000
GRID = 13.000

RUN NO. 479/ 0 GRADIENT INTERVAL = -5.00/ 5.00

DLT-X	DLT-Z	CN	CA	CLM	CY	CYN	CBL	XCP/L	CPB1	CPB2	CPBC
.463	802.100	.07594	.07106	-.03909	.00022	-.00011	.00399	1.17480	-.02323	-.02319	-.02153
.435	900.520	-.03282	.07202	-.01698	-.00012	.00029	.00228	.14247	-.02468	-.02477	-.02320
.403	1000.200	-.04898	.07503	-.01179	-.00034	.00034	.00260	.41928	-.02608	-.02628	-.02490
	GRADIENT	.00000	.00000	.00000	.00000	.00000	.00000	.00000	.00000	.00000	.00000

AEDC VA422(IA17) ORB AND ET SEPARATING(ORB DATA) (RTR085) (24 JUL 75)

REFERENCE DATA

SREF = 2690.0000 SQ.FT. XMRP = 1089.6000 IN. XO
LREF = 1290.3000 IN. YMRP = .0000 IN. YO
BREF = 1290.3000 IN. ZMRP = 375.0000 IN. ZO
SCALE = .0100

PARAMETRIC DATA

DLT-Y = .000 ALPHA = .000
BETA = .000 DLTALF = -20.000
DLTBTA = .000 MACH = 5.930
AILRON = 15.000 ELEVON = .000
GRID = 13.000

RUN NO. 473/ 0 GRADIENT INTERVAL = -5.00/ 5.00

DLT-X	DLT-Z	CN	CA	CLM	CY	CYN	CBL	XCP/L	CPB1	CPB2	CPBC
400.380	750.210	-.04878	.07293	-.01187	-.00036	.00032	.00258	.41889	-.02444	-.02456	-.02287
400.410	800.250	-.04900	.07374	-.01181	-.00046	.00031	.00258	.41897	-.02664	-.02692	-.02583
400.320	900.470	-.04907	.07537	-.01179	-.00018	.00032	.00260	.41968	-.02741	-.02778	-.02707
400.290	1000.400	-.04914	.07779	-.01184	-.00033	.00035	.00280	.41907	-.02732	-.02769	-.02703
	GRADIENT	.00000	.00000	.00000	.00000	.00000	.00000	.00000	.00000	.00000	.00000

AEDC VA422(IA17) ORB AND ET SEPARATING(ORB DATA) (RTR087) (24 JUL 75)

REFERENCE DATA

SREF = 2690.0000 SQ.FT. XMRP = 1089.6000 IN. XO
LREF = 1290.3000 IN. YMRP = .0000 IN. YO
BREF = 1290.3000 IN. ZMRP = 375.0000 IN. ZO
SCALE = .0100

PARAMETRIC DATA

DLT-Y = .000 ALPHA = 5.000
BETA = .000 DLTALF = .000
DLTBTA = .000 MACH = 5.930
AILRON = 15.000 ELEVON = .000
GRID = 12.000

RUN NO. 482/ 0 GRADIENT INTERVAL = -5.00/ 5.00

DLT-X	DLT-Z	CN	CA	CLM	CY	CYN	CBL	XCP/L	CPB1	CPB2	CPBC
.550	19.283	.03849	.06473	-.01383	.00028	-.00081	.00275	1.01920	-.02724	-.02708	-.02592
.580	98.334	.04489	.07675	-.00636	.00058	-.00050	.00300	.80167	-.02695	-.02672	-.02660
.563	199.080	.06548	.07516	.00708	.00072	-.00045	.00307	.55354	-.02666	-.02641	-.02632
.492	300.170	.11737	.07840	-.00262	.00107	-.00068	.00366	.68230	-.02634	-.02607	-.02600
.545	402.010	.15361	.07778	-.01709	.00211	-.00135	.00498	.77123	-.02606	-.02579	-.02570
.632	501.120	.09835	.07097	-.01794	.00171	-.00121	.00502	.84241	-.02581	-.02557	-.02545
.677	598.440	.05168	.06933	-.01075	.00105	-.00055	.00310	.86806	-.02563	-.02541	-.02530
	GRADIENT	.00000	.00000	.00000	.00000	.00000	.00000	.00000	.00000	.00000	.00000

RUN NO. 483/ 0 GRADIENT INTERVAL = -5.00/ 5.00

DLT-X	DLT-Z	CN	CA	CLM	CY	CYN	CBL	XCP/L	CPB1	CPB2	CPBC
400.510	19.877	.09167	.07543	.01213	.00098	-.00038	.00330	.52763	-.02958	-.02945	-.02929
400.440	98.436	.09249	.07528	.00526	.00089	-.00062	.00353	.60307	-.02954	-.02933	-.02914
400.500	200.100	.14759	.08041	-.00805	.00174	-.00103	.00432	.71454	-.02948	-.02921	-.02898
400.540	298.830	.14339	.07339	-.01955	.00185	-.00140	.00564	.79636	-.02948	-.02918	-.02894
400.480	398.110	.07898	.06985	-.01547	.00130	-.00090	.00417	.85583	-.02950	-.02918	-.02894
400.530	499.470	.04733	.06960	-.00968	.00091	-.00055	.00315	.86443	-.02950	-.02913	-.02887
400.630	599.930	.04599	.07052	-.00912	.00081	-.00054	.00317	.85827	-.02935	-.02897	-.02864
	GRADIENT	.00000	.00000	.00000	.00000	.00000	.00000	.00000	.00000	.00000	.00000

AEDC VA422(IA17) ORB AND ET SEPARATING(ORB DATA) (RTR088) (24 JUL 75)

REFERENCE DATA

SREF = 2690.0000 SQ.FT. XMRP = 1089.6000 IN. XO
LREF = 1290.3000 IN. YMRP = .0000 IN. YO
BREF = 1290.3000 IN. ZMRP = 375.0000 IN. ZO
SCALE = .0100

PARAMETRIC DATA

DLT-Y = .000 ALPHA = 5.000
BETA = .000 DLTALF = -10.000
DLTBTA = .000 MACH = 5.930
AILRON = 15.000 ELEVON = .000
GRID = 12.000

RUN NO. 484/ 0 GRADIENT INTERVAL = -5.00/ 5.00

DLT-X	DLT-Z	CN	CA	CLM	CY	CYN	CBL	XCP/L	CPB1	CPB2	CPBC
.464	401.000	.19353	.07855	-.00975	.00157	-.00098	.00471	.71041	-.02867	-.02815	-.02777
.436	502.680	.20221	.08095	-.02195	.00245	-.00167	.00590	.76854	-.02876	-.02825	-.02787
.479	601.680	.12935	.07157	-.02275	.00199	-.00156	.00619	.83585	-.02896	-.02847	-.02809
.574	750.090	.04835	.06893	-.00974	.00079	-.00055	.00315	.86153	-.02940	-.02895	-.02871
-.719	803.270	.04652	.07004	-.00908	.00071	-.00054	.00317	.85522	-.02942	-.02898	-.02874
	GRADIENT	.00000	.00000	.00000	.00000	.00000	.00000	.00000	.00000	.00000	.00000

RUN NO. 485/ 0 GRADIENT INTERVAL = -5.00/ 5.00

DLT-X	DLT-Z	CN	CA	CLM	CY	CYN	CBL	XCP/L	CPB1	CPB2	CPBC
400.440	398.400	.18777	.07368	-.02561	.00221	-.00167	.00646	.79640	-.02713	-.02669	-.02581
400.550	497.710	.10127	.07014	-.01931	.00163	-.00119	.00522	.85072	-.02684	-.02640	-.02554
400.470	599.170	.05057	.06856	-.01051	.00076	-.00055	.00312	.86792	-.02676	-.02632	-.02552
400.620	750.030	.04648	.07057	-.00915	.00080	-.00054	.00317	.85681	-.02662	-.02618	-.02542
400.610	800.130	.04636	.07055	-.00913	.00085	-.00053	.00317	.85700	-.02682	-.02640	-.02573
	GRADIENT	.00000	.00000	.00000	.00000	.00000	.00000	.00000	.00000	.00000	.00000

AEDC VA422(IA17) ORB AND ET SEPARATING(ORB DATA) (RTR090) (24 JUL 75)

REFERENCE DATA

SREF = 2690.0000 SQ.FT. XMRP = 1089.6000 IN. XO
LREF = 1290.3000 IN. YMRP = .0000 IN. YO
BREF = 1290.3000 IN. ZMRP = 375.0000 IN. ZO
SCALE = .0100

PARAMETRIC DATA

DLT-Y = .000 ALPHA = 5.000
BETA = .000 DLTALF = -20.000
DLTBTA = .000 MACH = 5.930
AILRON = 15.000 ELEVON = .000
GRID = 12.000

RUN NO. 492/ 0 GRADIENT INTERVAL = -5.00/ 5.00

DLT-X	DLT-Z	CN	CA	CLM	CY	CYN	CBL	XCP/L	CPB1	CPB2	CPBC
.340	801.510	.16412	.06547	-.03840	.00167	-.00125	.00610	.89397	-.02662	-.02621	-.02499
.489	900.210	.05397	.06674	-.01143	.00091	-.00054	.00309	.87173	-.02774	-.02725	-.02622
.394	1000.200	.04655	.06827	-.00898	.00068	-.00053	.00316	.85297	-.02882	-.02827	-.02755
	GRADIENT	.00000	.00000	.00000	.00000	.00000	.00000	.00000	.00000	.00000	.00000

ORIGINAL PAGE IS OF POOR QUALITY

AEDC VA422(IA17) ORB AND ET SEPARATING(ORB DATA) (RTR090) (24 JUL 75)

REFERENCE DATA

SREF = 2690.0000 SQ.FT. XMRP = 1089.6000 IN. XO
LREF = 1290.3000 IN. YMRP = .0000 IN. YO
BREF = 1290.3000 IN. ZMRP = 375.0000 IN. ZO
SCALE = .0100

PARAMETRIC DATA

DLT-Y = .000 ALPHA = 5.000
BETA = .000 DLTALF = -20.000
DLTBTA = .000 MACH = 5.930
AILRON = 15.000 ELEVON = .000
GRID = 12.000

RUN NO. 486/ 0 GRADIENT INTERVAL = -5.00/ 5.00

DLT-X	DLT-Z	CN	CA	CLM	CY	CYN	CBL	XCP/L	CPB1	CPB2	CPBC
400.490	750.280	.05039	.08737	-.01033	.00100	-.00055	.00314	.86508	-.02911	-.02864	-.02834
400.460	800.100	.04684	.06901	-.00902	.00084	-.00052	.00317	.85266	-.02924	-.02880	-.02865
400.370	900.240	.04692	.07024	-.00909	.00085	-.00052	.00318	.85383	-.02922	-.02877	-.02864
400.500	1000.200	.04671	.07037	-.00912	.00074	-.00054	.00318	.85523	-.02908	-.02867	-.02851
	GRADIENT	.00000	.00000	.00000	.00000	.00000	.00000	.00000	.00000	.00000	.00000

AEDC VA422(IA17) ORB AND ET SEPARATING(ORB DATA) (RTR091) (24 JUL 75)

REFERENCE DATA

SREF = 2690.0000 SQ.FT. XMRP = 1089.6000 IN. XO
LREF = 1290.3000 IN. YMRP = .0000 IN. YO
BREF = 1290.3000 IN. ZMRP = 375.0000 IN. ZO
SCALE = .0100

PARAMETRIC DATA

DLT-Y = .000 ALPHA = -5.000
BETA = .000 DLTALF = .000
DLTBTA = .000 MACH = 5.930
AILRON = 15.000 ELEVON = .000
GRID = 11.000

RUN NO. 495/ 0 GRADIENT INTERVAL = -5.00/ 5.00

DLT-X	DLT-Z	CN	CA	CLM	CY	CYN	CBL	XCP/L	CPB1	CPB2	CPBC
.538	19.362	-.07025	.10569	-.00965	.00106	.00023	.00336	.52263	-.02591	-.02552	-.02527
.493	101.340	-.04922	.10276	-.00587	.00133	.00041	.00367	.54084	-.02610	-.02575	-.02556
.497	201.770	-.06364	.10035	-.01103	.00014	.00024	.00393	.48665	-.02620	-.02586	-.02575
.487	301.250	-.09556	.09342	-.01683	.00017	.00036	.00370	.48392	-.02623	-.02587	-.02584
.413	400.210	-.13307	.09176	-.01554	-.00003	.00053	.00320	.54323	-.02623	-.02585	-.02586
.545	500.170	-.14242	.09259	-.01337	-.00021	.00054	.00318	.56609	-.02611	-.02574	-.02582
.548	600.190	-.14246	.09285	-.01340	-.00007	.00054	.00318	.56592	-.02588	-.02550	-.02564
	GRADIENT	.00000	.00000	.00000	.00000	.00000	.00000	.00000	.00000	.00000	.00000

RUN NO. 496/ 0 GRADIENT INTERVAL = -5.00/ 5.00

DLT-X	DLT-Z	CN	CA	CLM	CY	CYN	CBL	XCP/L	CPB1	CPB2	CPBC
400.360	20.070	-.01968	.09779	.00530	.00095	.00036	.00397	.92911	-.02760	-.02657	-.02605
400.500	100.130	-.04069	.10058	-.00784	.00046	.00032	.00394	.46731	-.02662	-.02549	-.02494
400.450	197.810	-.07560	.09433	-.01650	.00036	.00023	.00410	.44173	-.02620	-.02512	-.02457
400.490	298.140	-.12165	.09184	-.01736	.00010	.00051	.00339	.51730	-.02606	-.02507	-.02455
400.500	400.040	-.14181	.09200	-.01343	-.00025	.00054	.00317	.56528	-.02602	-.02510	-.02463
400.470	500.200	-.14229	.09264	-.01338	-.00010	.00054	.00318	.56598	-.02591	-.02509	-.02462
400.510	600.120	-.14203	.09257	-.01334	-.00019	.00052	.00318	.56609	-.02602	-.02530	-.02486
	GRADIENT	.00000	.00000	.00000	.00000	.00000	.00000	.00000	.00000	.00000	.00000

AEDC VA422(IA17) ORB AND ET SEPARATING(ORB DATA) (RTR092) (24 JUL 75)

REFERENCE DATA

SREF = 2690.0000 SQ.FT. XMRP = 1089.6000 IN. XO
LREF = 1290.3000 IN. YMRP = .0000 IN. YO
BREF = 1290.3000 IN. ZMRP = 375.0000 IN. ZO
SCALE = .0100

PARAMETRIC DATA

DLT-Y = .000 ALPHA = -5.000
BETA = .000 DLTALF = -10.000
DLTBTA = .000 MACH = 5.930
AILRON = 15.000 ELEVON = .000
GRID = 11.000

RUN NO. 497/ 0 GRADIENT INTERVAL = -5.00/ 5.00

DLT-X	DLT-Z	CN	CA	CLM	CY	CYN	CBL	XCP/L	CPB1	CPB2	CPBC
.401	404.090	.05939	.09353	-.04289	.00185	-.00077	.00676	1.38220	-.02581	-.02532	-.02431
.418	500.930	-.08973	.08711	-.02606	.00031	.00042	.00362	.36962	-.02702	-.02658	-.02591
.505	600.300	-.14099	.09108	-.01362	-.00016	.00053	.00317	.56341	-.02753	-.02704	-.02659
.493	750.310	-.14207	.09265	-.01336	-.00013	.00053	.00318	.56597	-.02764	-.02712	-.02677
.137	801.370	-.14238	.09267	-.01339	-.00018	.00052	.00317	.56596	-.02761	-.02708	-.02673
	GRADIENT	.00000	.00000	.00000	.00000	.00000	.00000	.00000	.00000	.00000	.00000

RUN NO. 498/ 0 GRADIENT INTERVAL = -5.00/ 5.00

DLT-X	DLT-Z	CN	CA	CLM	CY	CYN	CBL	XCP/L	CPB1	CPB2	CPBC
400.440	397.020	-.09407	.08992	-.02256	.00029	.00043	.00362	.42014	-.02196	-.02105	-.01971
400.380	499.510	-.13889	.09104	-.01425	-.00016	.00051	.00316	.55741	-.02133	-.02041	-.01922
400.480	600.020	-.14128	.09242	-.01340	-.00014	.00054	.00318	.56518	-.02122	-.02039	-.01942
400.500	750.220	-.14157	.09261	-.01337	-.00012	.00053	.00318	.56555	-.02225	-.02158	-.02097
400.480	800.080	-.14170	.09264	-.01338	-.00023	.00054	.00317	.56556	-.02287	-.02223	-.02175
	GRADIENT	.00000	.00000	.00000	.00000	.00000	.00000	.00000	.00000	.00000	.00000

AEDC VA422(IA17) ORB AND ET SEPARATING(ORB DATA) (RTR094) (24 JUL 75)

REFERENCE DATA

SREF = 2690.0000 SQ.FT. XMRP = 1089.6000 IN. XO
LREF = 1290.3000 IN. YMRP = .0000 IN. YO
BREF = 1290.3000 IN. ZMRP = 375.0000 IN. ZO
SCALE = .0100

PARAMETRIC DATA

DLT-Y = .000 ALPHA = -5.000
BETA = .000 DLTALF = -20.000
DLTBTA = .000 MACH = 5.930
AILRON = 15.000 ELEVON = .000
GRID = 11.000

RUN NO. 505/ 0 GRADIENT INTERVAL = -5.00/ 5.00

DLT-X	DLT-Z	CN	CA	CLM	CY	CYN	CBL	XCP/L	CPB1	CPB2	CPBC
.512	804.240	.06610	.08905	-.04405	.00211	-.00066	.00649	1.32640	-.02202	-.02162	-.01997
.509	901.120	-.09282	.08544	-.02531	.00068	.00042	.00331	.38729	-.02334	-.02307	-.02155
.456	1000.400	-.14092	.08951	-.01342	-.00016	.00053	.00315	.56478	-.02495	-.02469	-.02343
	GRADIENT	.00000	.00000	.00000	.00000	.00000	.00000	.00000	.00000	.00000	.00000

AEDC VA422(IA17) ORB AND ET SEPARATING(ORB DATA) (RTR094) (24 JUL 75)

REFERENCE DATA

SREF = 2690.0000 SQ.FT. XMRP = 1089.6000 IN. XO
LREF = 1290.3000 IN. YMRP = .0000 IN. YO
BREF = 1290.3000 IN. ZMRP = 375.0000 IN. ZO
SCALE = .0100

PARAMETRIC DATA

DLT-Y = .000 ALPHA = -5.000
BETA = .000 DLTALF = -20.000
DLTBTA = .000 MACH = 5.930
AILRON = 15.000 ELEVON = .000
GRID = 11.000

RUN NO. 499/ 0 GRADIENT INTERVAL = -5.00/ 5.00

DLT-X	DLT-Z	CN	CA	CLM	CY	CYN	CBL	XCP/L	CPB1	CPB2	CPBC
400.560	751.020	-.09879	.07947	-.02121	.00119	.00034	.00239	.44528	-.01879	-.01858	-.01549
400.410	800.620	-.13326	.08505	-.01480	.00016	.00044	.00330	.54896	-.02472	-.02426	-.02283
400.460	900.330	-.14063	.08883	-.01359	-.00029	.00049	.00313	.56335	-.02668	-.02623	-.02589
400.320	1000.400	-.14146	.09243	-.01338	-.00031	.00054	.00317	.56540	-.02665	-.02622	-.02596
	GRADIENT	.00000	.00000	.00000	.00000	.00000	.00000	.00000	.00000	.00000	.00000

AEDC VA422(IA17) ORB AND ET SEPARATING(ORB DATA) (RTR095) (24 JUL 75)

REFERENCE DATA

SREF = 2690.0000 SQ.FT. XMRP = 1089.6000 IN. XO
LREF = 1290.3000 IN. YMRP = .0000 IN. YO
BREF = 1290.3000 IN. ZMRP = 375.0000 IN. ZO
SCALE = .0100

PARAMETRIC DATA

DLT-Y = .000 ALPHA = -10.000
BETA = .000 DLTALF = .000
DLTBTA = .000 MACH = 5.930
AILRON = 15.000 ELEVON = .000
GRID = 10.000

RUN NO. 521/ 0 GRADIENT INTERVAL = -5.00/ 5.00

DLT-X	DLT-Z	CN	CA	CLM	CY	CYN	CBL	XCP/L	CPB1	CPB2	CPBC
.495	31.218	-.10087	.12645	-.00759	-.00071	.00111	.00436	.58471	-.02318	-.02202	-.02109
.449	102.530	-.11072	.11077	-.01048	-.00254	.00133	.00450	.56537	-.02400	-.02282	-.02189
.530	202.090	-.15855	.10392	-.01680	-.00240	.00141	.00423	.55405	-.02509	-.02392	-.02311
.519	300.510	-.20053	.10272	-.01989	-.00256	.00151	.00391	.56079	-.02557	-.02441	-.02374
.487	400.150	-.21762	.10314	-.01711	-.00241	.00156	.00389	.58140	-.02577	-.02464	-.02409
.552	500.230	-.21888	.10389	-.01690	-.00264	.00157	.00388	.58281	-.02572	-.02460	-.02408
	GRADIENT	.00000	.00000	.00000	.00000	.00000	.00000	.00000	.00000	.00000	.00000

RUN NO. 522/ 0 GRADIENT INTERVAL = -5.00/ 5.00

DLT-X	DLT-Z	CN	CA	CLM	CY	CYN	CBL	XCP/L	CPB1	CPB2	CPBC
400.410	31.569	-.08690	.11230	.00091	-.01920	.00405	.00423	.67050	-.02305	-.02141	-.02024
400.390	97.797	-.10583	.10836	-.01186	-.00138	.00110	.00497	.54791	-.02165	-.02006	-.01879
400.440	197.140	-.16969	.10322	-.01994	-.00234	.00147	.00405	.54247	-.02030	-.01891	-.01769
400.510	298.800	-.20872	.10216	-.01898	-.00248	.00153	.00391	.56905	-.01963	-.01832	-.01733
400.370	399.930	-.21856	.10336	-.01689	-.00252	.00160	.00387	.58272	-.01957	-.01832	-.01751
400.380	500.020	-.21843	.10371	-.01683	-.00263	.00159	.00388	.58295	-.02010	-.01869	-.01831
	GRADIENT	.00000	.00000	.00000	.00000	.00000	.00000	.00000	.00000	.00000	.00000

AEDC VA422(IA17) ORB AND ET SEPARATING(ORB DATA) (RTR096) (24 JUL 75)

REFERENCE DATA

SREF = 2690.0000 SQ.FT. XMRP = 1089.6000 IN. XO
LREF = 1290.3000 IN. YMRP = .0000 IN. YO
BREF = 1290.3000 IN. ZMRP = 375.0000 IN. ZO
SCALE = .0100

PARAMETRIC DATA

DLT-Y = .000 ALPHA = -10.000
BETA = .000 DLTALF = -10.000
DLTBTA = .000 MACH = 5.930
AILRON = 15.000 ELEVON = .000
GRID = 10.000

RUN NO. 523/ 0 GRADIENT INTERVAL = -5.00/ 5.00

DLT-X	DLT-Z	CN	CA	CLM	CY	CYN	CBL	XCP/L	CPB1	CPB2	CPBC
.510	403.150	-.02524	.10281	-.04642	-.00007	.00061	.00727	-1.17910	-.01984	-.01896	-.01733
.401	501.690	-.10798	.09595	-.04107	-.00136	.00128	.00503	.27964	-.02190	-.02084	-.01923
.243	600.620	-.19935	.09850	-.02083	-.00177	.00151	.00430	.55553	-.02445	-.02329	-.02252
.481	700.260	-.21749	.10273	-.01710	-.00258	.00157	.00384	.58138	-.02480	-.02371	-.02325
.479	801.200	-.21853	.10383	-.01684	-.00261	.00158	.00388	.58292	-.02467	-.02357	-.02316
	GRADIENT	.00000	.00000	.00000	.00000	.00000	.00000	.00000	.00000	.00000	.00000

RUN NO. 524/ 0 GRADIENT INTERVAL = -5.00/ 5.00

DLT-X	DLT-Z	CN	CA	CLM	CY	CYN	CBL	XCP/L	CPB1	CPB2	CPBC
400.470	397.390	-.16173	.09878	-.02900	-.00207	.00152	.00431	.48071	-.01397	-.01326	-.01095
400.320	499.390	-.21384	.10125	-.01778	-.00237	.00154	.00389	.57685	-.01261	-.01193	-.00997
400.310	600.200	-.21626	.10224	-.01728	-.00264	.00156	.00382	.58008	-.01267	-.01194	-.01057
400.200	700.180	-.21788	.10362	-.01690	-.00261	.00159	.00388	.58245	-.01359	-.01290	-.01201
400.470	800.240	-.21830	.10371	-.01688	-.00270	.00160	.00387	.58267	-.01517	-.01445	-.01396
	GRADIENT	.00000	.00000	.00000	.00000	.00000	.00000	.00000	.00000	.00000	.00000

AEDC VA422(IA17) ORB AND ET SEPARATING(ORB DATA) (RTR097) (24 JUL 75)

REFERENCE DATA

SREF = 2690.0000 SQ.FT. XMRP = 1089.6000 IN. XO
LREF = 1290.3000 IN. YMRP = .0000 IN. YO
BREF = 1290.3000 IN. ZMRP = 375.0000 IN. ZO
SCALE = .0100

PARAMETRIC DATA

DLT-Y = .000 ALPHA = .000
BETA = 3.000 DLTALF = .000
DLTBTA = .000 MACH = 5.930
AILRON = .000 ELEVON = 15.000
GRID = 14.000

RUN NO. 581/ 0 GRADIENT INTERVAL = -5.00/ 5.00

DLT-X	DLT-Z	CN	CA	CLM	CY	CYN	CBL	XCP/L	CPB1	CPB2	CPBC
.628	18.911	-.00386	.08423	-.01676	-.03726	-.00213	-.00231	.00000	-.02573	-.02576	-.02559
.478	99.566	.00833	.09258	-.00777	-.04111	-.00178	-.00188	1.59330	-.02551	-.02549	-.02542
.586	200.480	.03530	.08897	-.00725	-.04003	-.00011	-.00343	.86548	-.02539	-.02531	-.02538
.580	302.120	.05645	.08884	-.02024	-.03243	-.00154	-.00188	1.01860	-.02503	-.02492	-.02505
.549	401.100	.00960	.08200	-.02252	-.03372	-.00159	.00079	3.00610	-.02478	-.02464	-.02465
.603	500.200	-.03448	.07934	-.01611	-.03442	-.00143	-.00048	.19270	-.02456	-.02440	-.02471
.784	597.170	-.03965	.08041	-.01472	-.03462	-.00139	-.00058	.28879	-.02408	-.02389	-.02431
	GRADIENT	.00000	.00000	.00000	.00000	.00000	.00000	.00000	.00000	.00000	.00000

AEDC VA422(IA17) ORB AND ET SEPARATING(ORB DATA) (RTR098) (24 JUL 75)

REFERENCE DATA

SREF = 2690.0000 SQ.FT. XMRP = 1089.6000 IN. XO
LREF = 1290.3000 IN. YMRP = .0000 IN. YO
BREF = 1290.3000 IN. ZMRP = 375.0000 IN. ZO
SCALE = .0100

PARAMETRIC DATA

DLT-Y = .000 ALPHA = .000
BETA = 3.000 DLTALF = -10.000
DLTBTA = .000 MACH = 5.930
AILRON = .000 ELEVON = 15.000
GRID = 14.000

RUN NO. 582/ 0 GRADIENT INTERVAL = -5.00/ 5.00

DLT-X	DLT-Z	CN	CA	CLM	CY	CYN	CBL	XCP/L	CPB1	CPB2	CPBC
.515	403.710	.18268	.09228	-.04031	-.03287	-.00126	-.00138	.88068	-.02692	-.02684	-.02609
.603	501.800	.05758	.08391	-.03074	-.03283	-.00162	.00168	1.19400	-.02725	-.02722	-.02651
.507	600.320	-.02304	.07843	-.01870	-.03426	-.00152	-.00006	-.15169	-.02745	-.02748	-.02683
.549	750.060	-.03957	.08047	-.01468	-.03461	-.00139	-.00057	.28895	-.02746	-.02750	-.02693
-.192	802.200	-.03957	.08049	-.01472	-.03464	-.00140	-.00058	.28796	-.02745	-.02749	-.02691
	GRADIENT	.00000	.00000	.00000	.00000	.00000	.00000	.00000	.00000	.00000	.00000

AEDC VA422(IA17) ORB AND ET SEPARATING(ORB DATA) (RTR099) (24 JUL 75)

REFERENCE DATA

SREF = 2690.0000 SQ.FT. XMRP = 1089.6000 IN. XO
LREF = 1290.3000 IN. YMRP = .0000 IN. YO
BREF = 1290.3000 IN. ZMRP = 375.0000 IN. ZO
SCALE = .0100

PARAMETRIC DATA

DLT-Y = .000 ALPHA = .000
BETA = 3.000 DLTALF = -20.000
DLTBTA = .000 MACH = 5.930
AILRON = .000 ELEVON = 15.000
GRID = 14.000

RUN NO. 583/ 0 GRADIENT INTERVAL = -5.00/ 5.00

DLT-X	DLT-Z	CN	CA	CLM	CY	CYN	CBL	XCP/L	CPB1	CPB2	CPBC
.529	802.200	.09438	.07496	-.04417	-.03143	-.00188	.00227	1.12800	-.02097	-.02060	-.01937
.586	900.460	-.02166	.07478	-.02016	-.03430	-.00146	-.00030	-.27047	-.02164	-.02127	-.02016
.388	1000.200	-.03923	.07912	-.01471	-.03462	-.00141	-.00058	.28495	-.02171	-.02126	-.02012
	GRADIENT	.00000	.00000	.00000	.00000	.00000	.00000	.00000	.00000	.00000	.00000

AEDC VA422(IA17) ORB AND ET SEPARATING(ORB DATA) (RTR100) (24 JUL 75)

REFERENCE DATA

SREF = 2690.0000 SQ.FT. XMRP = 1089.6000 IN. XO
LREF = 1290.3000 IN. YMRP = .0000 IN. YO
BREF = 1290.3000 IN. ZMRP = 375.0000 IN. ZO
SCALE = .0100

PARAMETRIC DATA

DLT-Y = .000 ALPHA = .000
BETA = .000 DLTALF = .000
DLTBTA = .000 MACH = 5.930
AILRON = .000 ELEVON = 15.000
GRID = 13.000

RUN NO. 568/ 0 GRADIENT INTERVAL = -5.00/ 5.00

DLT-X	DLT-Z	CN	CA	CLM	CY	CYN	CBL	XCP/L	CPB1	CPB2	CPBC
.479	19.009	-.00972	.08439	-.01539	.00112	.00009	-.00003	-.92395	-.02704	-.02707	-.02661
.417	99.507	.00295	.09218	-.00681	.00137	.00042	.00009	.00000	-.02702	-.02705	-.02662
.419	200.390	.03212	.08891	-.00684	.00129	.00035	-.00069	.87290	-.02697	-.02700	-.02666
.515	302.040	.06044	.08856	-.02115	.00101	.00040	-.00066	1.01000	-.02690	-.02691	-.02662
.517	400.960	.01319	.08056	-.02304	.00064	.00042	-.00033	2.40610	-.02686	-.02686	-.02662
.435	500.110	-.03172	.07765	-.01655	.00059	.00038	-.00032	.13819	-.02672	-.02675	-.02658
.419	597.360	-.03700	.07879	-.01514	.00056	.00040	-.00033	.25082	-.02645	-.02646	-.02638
	GRADIENT	.00000	.00000	.00000	.00000	.00000	.00000	.00000	.00000	.00000	.00000

RUN NO. 569/ 0 GRADIENT INTERVAL = -5.00/ 5.00

DLT-X	DLT-Z	CN	CA	CLM	CY	CYN	CBL	XCP/L	CPB1	CPB2	CPBC
400.440	19.941	.05763	.08715	.00432	.00163	.00045	-.00004	.58510	-.02815	-.02805	-.02743
400.530	97.986	.05111	.08674	-.00715	.00158	.00030	-.00043	.79985	-.02785	-.02757	-.02692
400.480	199.100	.07330	.08669	-.02169	.00159	.00034	-.00034	.95588	-.02759	-.02719	-.02656
400.530	297.750	.01769	.08090	-.02379	.00054	.00038	-.00023	2.00480	-.02752	-.02711	-.02651
400.480	399.020	-.03218	.07782	-.01664	.00065	.00039	-.00032	.14300	-.02751	-.02715	-.02655
400.500	500.140	-.03708	.07885	-.01515	.00057	.00040	-.00033	.25141	-.02746	-.02711	-.02648
400.480	600.220	-.03733	.07893	-.01517	.00043	.00040	-.00034	.25361	-.02747	-.02715	-.02654
	GRADIENT	.00000	.00000	.00000	.00000	.00000	.00000	.00000	.00000	.00000	.00000

ORIGINAL PAGE IS OF POOR QUALITY

AEDC VA422(IA17) ORB AND ET SEPARATING(ORB DATA) (RTR101) (24 JUL 75)

REFERENCE DATA

SREF = 2690.0000 SQ.FT. XMRP = 1089.6000 IN. XO
LREF = 1290.3000 IN. YMRP = .0000 IN. YO
BREF = 1290.3000 IN. ZMRP = 375.0000 IN. ZO
SCALE = .0100

PARAMETRIC DATA

DLT-Y = .000 ALPHA = .000
BETA = .000 DLTALF = -10.000
DLTBTA = .000 MACH = 5.930
AILRON = .000 ELEVON = 15.000
GRID = 13.000

RUN NO. 570/ 0 GRADIENT INTERVAL = -5.00/ 5.00

DLT-X	DLT-Z	CN	CA	CLM	CY	CYN	CBL	XCP/L	CPB1	CPB2	CPBC
.476	403.480	.18216	.09221	-.04011	.00128	.00032	-.00003	.88018	-.02773	-.02757	-.02664
.558	501.850	.06235	.08308	-.03109	.00087	.00045	-.00040	1.15870	-.02815	-.02807	-.02720
.554	600.180	-.01925	.07666	-.01933	.00053	.00036	-.00032	-.34414	-.02857	-.02856	-.02775
.609	750.110	-.03713	.07886	-.01515	.00048	.00040	-.00033	.25184	-.02877	-.02876	-.02811
-.154	802.370	-.03727	.07893	-.01516	.00031	.00040	-.00034	.25317	-.02871	-.02867	-.02803
	GRADIENT	.00000	.00000	.00000	.00000	.00000	.00000	.00000	.00000	.00000	.00000

RUN NO. 571/ 0 GRADIENT INTERVAL = -5.00/ 5.00

DLT-X	DLT-Z	CN	CA	CLM	CY	CYN	CBL	XCP/L	CPB1	CPB2	CPBC
400.500	396.870	.05878	.08177	-.03145	.00069	.00050	-.00053	1.19510	-.02495	-.02445	-.02308
400.370	498.430	-.02251	.07670	-.01873	.00045	.00036	-.00030	-.17229	-.02418	-.02363	-.02236
400.510	600.050	-.03652	.07848	-.01517	.00050	.00039	-.00033	.24454	-.02403	-.02347	-.02237
400.460	750.270	-.03692	.07887	-.01518	.00048	.00039	-.00033	.24892	-.02460	-.02411	-.02333
400.500	800.200	-.03710	.07902	-.01518	.00045	.00039	-.00033	.25086	-.02505	-.02463	-.02394
	GRADIENT	.00000	.00000	.00000	.00000	.00000	.00000	.00000	.00000	.00000	.00000

AEDC VA422(IA17) ORB AND ET SEPARATING(ORB DATA) (RTR103) (24 JUL 75)

REFERENCE DATA

SREF = 2690.0000 SQ.FT. XMRP = 1089.6000 IN. XO
LREF = 1290.3000 IN. YMRP = .0000 IN. YO
BREF = 1290.3000 IN. ZMRP = 375.0000 IN. ZO
SCALE = .0100

PARAMETRIC DATA

DLT-Y = .000 ALPHA = .000
BETA = .000 DLTALF = -20.000
DLTBTA = .000 MACH = 5.930
AILRON = .000 ELEVON = 15.000
GRID = 13.000

RUN NO. 578/ 0 GRADIENT INTERVAL = -5.00/ 5.00

DLT-X	DLT-Z	CN	CA	CLM	CY	CYN	CBL	XCP/L	CPB1	CPB2	CPBC
.436	802.430	.09787	.07384	-.04343	.00170	-.00003	.00068	1.10380	-.01918	-.01864	-.01751
.516	900.560	-.02088	.07304	-.02006	.00053	.00039	-.00025	-.30059	-.01973	-.01923	-.01815
.465	1000.400	-.03683	.07642	-.01509	.00060	.00043	-.00033	.24807	-.02010	-.01959	-.01852
	GRADIENT	.00000	.00000	.00000	.00000	.00000	.00000	.00000	.00000	.00000	.00000

AEDC VA422(IA17) ORB AND ET SEPARATING(ORB DATA) (RTR103) (24 JUL 75)

REFERENCE DATA

SREF = 2690.0000 SQ.FT. XMRP = 1089.6000 IN. XO
LREF = 1290.3000 IN. YMRP = .0000 IN. YO
BREF = 1290.3000 IN. ZMRP = 375.0000 IN. ZO
SCALE = .0100

PARAMETRIC DATA

DLT-Y = .000 ALPHA = .000
BETA = .000 DLTALF = -20.000
DLTBTA = .000 MACH = 5.930
AILRON = .000 ELEVON = 15.000
GRID = 13.000

RUN NO. 572/ 0 GRADIENT INTERVAL = -5.00/ 5.00

DLT-X	DLT-Z	CN	CA	CLM	CY	CYN	CBL	XCP/L	CPB1	CPB2	CPBC
400.290	750.170	-.03646	.07383	-.01523	.00045	.00039	-.00033	.24238	-.02459	-.02429	-.02286
400.270	800.290	-.03665	.07519	-.01513	.00050	.00041	-.00034	.24703	-.02639	-.02616	-.02528
400.360	900.460	-.03699	.07690	-.01510	.00048	.00041	-.00033	.25169	-.02681	-.02663	-.02605
400.320	1000.300	-.03689	.07884	-.01516	.00048	.00040	-.00033	.24897	-.02654	-.02632	-.02576
	GRADIENT	.00000	.00000	.00000	.00000	.00000	.00000	.00000	.00000	.00000	.00000

AEDC VA422(IA17) ORB AND ET SEPARATING(ORB DATA) (RTR104) (24 JUL 75)

REFERENCE DATA

SREF = 2690.0000 SQ.FT. XMRP = 1089.6000 IN. XO
LREF = 1290.3000 IN. YMRP = .0000 IN. YO
BREF = 1290.3000 IN. ZMRP = 375.0000 IN. ZO
SCALE = .0100

PARAMETRIC DATA

DLT-Y = .000 ALPHA = 5.000
BETA = .000 DLTALF = .000
DLTBTA = .000 MACH = 5.930
AILRON = .000 ELEVON = 15.000
GRID = 12.000

RUN NO. 555/ 0 GRADIENT INTERVAL = -5.00/ 5.00

DLT-X	DLT-Z	CN	CA	CLM	CY	CYN	CBL	XCP/L	CPB1	CPB2	CPBC
.579	19.268	.05143	.06687	-.01718	.00018	-.00025	-.00012	.99407	-.02670	-.02635	-.02650
.566	98.326	.05907	.07889	-.00991	.00044	.00012	-.00001	.82770	-.02633	-.02595	-.02611
.552	199.060	.08188	.07769	.00293	.00044	.00027	-.00041	.62422	-.02585	-.02545	-.02565
.652	300.060	.13651	.08195	-.00786	.00068	.00033	-.00059	.71760	-.02540	-.02497	-.02520
.664	402.090	.17965	.08296	-.02426	.00110	.00030	-.00090	.79503	-.02497	-.02454	-.02476
.614	501.130	.12648	.07649	-.02570	.00068	.00038	-.00071	.86319	-.02458	-.02414	-.02438
.655	598.560	.06786	.07194	-.01516	.00048	.00026	-.00048	.88343	-.02432	-.02386	-.02416
	GRADIENT	.00000	.00000	.00000	.00000	.00000	.00000	.00000	.00000	.00000	.00000

RUN NO. 556/ 0 GRADIENT INTERVAL = -5.00/ 5.00

DLT-X	DLT-Z	CN	CA	CLM	CY	CYN	CBL	XCP/L	CPB1	CPB2	CPBC
400.580	19.875	.10527	.07778	.00881	.00087	.00041	-.00013	.57819	-.02855	-.02829	-.02829
400.480	98.521	.10912	.07811	.00672	.00072	.00018	-.00025	.65336	-.02855	-.02827	-.02820
400.510	200.140	.15988	.08486	-.01413	.00104	.00038	-.00098	.74326	-.02857	-.02827	-.02815
400.500	298.950	.17208	.07947	-.02742	.00074	.00041	-.00072	.81936	-.02861	-.02831	-.02817
400.490	398.100	.10403	.07419	-.02184	.00057	.00033	-.00083	.86989	-.02866	-.02837	-.02820
400.580	499.340	.06414	.07207	-.01421	.00043	.00028	-.00048	.88161	-.02870	-.02840	-.02819
400.600	599.910	.06274	.07330	-.01370	.00055	.00028	-.00047	.87840	-.02855	-.02823	-.02794
	GRADIENT	.00000	.00000	.00000	.00000	.00000	.00000	.00000	.00000	.00000	.00000

AEDC VA422(IA17) ORB AND ET SEPARATING(ORB DATA) (RTR105) (24 JUL 75)

REFERENCE DATA

SREF = 2690.0000 SQ.FT. XMRP = 1089.6000 IN. XO
LREF = 1290.3000 IN. YMRP = .0000 IN. YO
BREF = 1290.3000 IN. ZMRP = 375.0000 IN. ZO
SCALE = .0100

PARAMETRIC DATA

DLT-Y = .000 ALPHA = 5.000
BETA = .000 DLTALF = -10.000
DLTBTA = .000 MACH = 5.930
AILRON = .000 ELEVON = 15.000
GRID = 12.000

RUN NO. 557/ 0 GRADIENT INTERVAL = -5.00/ 5.00

DLT-X	DLT-Z	CN	CA	CLM	CY	CYN	CBL	XCP/L	CPB1	CPB2	CPBC
.447	400.900	.21686	.08288	-.01601	.00101	.00035	-.00050	.73382	-.02841	-.02794	-.02754
.416	502.720	.23281	.08772	-.03042	.00136	.00028	-.00089	.79068	-.02850	-.02802	-.02762
.466	601.840	.16171	.07857	-.03183	.00082	.00039	-.00044	.85681	-.02865	-.02820	-.02782
.474	750.090	.06493	.07149	-.01433	.00039	.00029	-.00048	.88073	-.02912	-.02870	-.02852
-.815	803.350	.06298	.07277	-.01365	.00034	.00027	-.00047	.87675	-.02919	-.02878	-.02860
	GRADIENT	.00000	.00000	.00000	.00000	.00000	.00000	.00000	.00000	.00000	.00000

RUN NO. 558/ 0 GRADIENT INTERVAL = -5.00/ 5.00

DLT-X	DLT-Z	CN	CA	CLM	CY	CYN	CBL	XCP/L	CPB1	CPB2	CPBC
400.420	398.420	.22048	.08111	-.03483	.00103	.00042	-.00033	.81800	-.02701	-.02654	-.02573
400.520	497.740	.13029	.07586	-.02732	.00077	.00026	-.00031	.86971	-.02672	-.02626	-.02548
400.530	598.930	.06740	.07112	-.01509	.00059	.00026	-.00048	.88384	-.02664	-.02619	-.02545
400.530	750.100	.06297	.07321	-.01369	.00039	.00029	-.00047	.87739	-.02650	-.02604	-.02534
400.600	800.120	.06312	.07323	-.01369	.00042	.00027	-.00047	.87688	-.02681	-.02634	-.02577
	GRADIENT	.00000	.00000	.00000	.00000	.00000	.00000	.00000	.00000	.00000	.00000

AEDC VA422(IA17) ORB AND ET SEPARATING(ORB DATA) (RTR107) (24 JUL 75)

REFERENCE DATA

SREF = 2690.0000 SQ.FT. XMRP = 1089.6000 IN. XO
LREF = 1290.3000 IN. YMRP = .0000 IN. YO
BREF = 1290.3000 IN. ZMRP = 375.0000 IN. ZO
SCALE = .0100

PARAMETRIC DATA

DLT-Y = .000 ALPHA = 5.000
BETA = .000 DLTALF = -20.000
DLTBTA = .000 MACH = 5.930
AILRON = .000 ELEVON = 15.000
GRID = 12.000

RUN NO. 565/ 0 GRADIENT INTERVAL = -5.00/ 5.00

DLT-X	DLT-Z	CN	CA	CLM	CY	CYN	CBL	XCP/L	CPB1	CPB2	CPBC
.389	801.630	.19639	.07125	-.04739	.00073	.00029	-.00023	.90132	-.02800	-.02746	-.02669
.357	900.200	.07097	.06949	-.01604	.00047	.00029	-.00047	.88601	-.02885	-.02831	-.02782
.476	1000.200	.06307	.07162	-.01361	.00036	.00029	-.00047	.87586	-.02941	-.02890	-.02856
	GRADIENT	.00000	.00000	.00000	.00000	.00000	.00000	.00000	.00000	.00000	.00000

AEDC VA422(IA17) ORB AND ET SEPARATING(ORB DATA) (RTR107) (24 JUL 75)

REFERENCE DATA

SREF = 2690.0000 SQ.FT. XMRP = 1089.6000 IN. XO
LREF = 1290.3000 IN. YMRP = .0000 IN. YO
BREF = 1290.3000 IN. ZMRP = 375.0000 IN. ZO
SCALE = .0100

PARAMETRIC DATA

DLT-Y = .000 ALPHA = 5.000
BETA = .000 DLTALF = -20.000
DLTBTA = .000 MACH = 5.930
AILRON = .000 ELEVON = 15.000
GRID = 12.000

RUN NO. 559/ 0 GRADIENT INTERVAL = -5.00/ 5.00

DLT-X	DLT-Z	CN	CA	CLM	CY	CYN	CBL	XCP/L	CPB1	CPB2	CPBC
400.410	750.190	.06739	.07045	-.01494	.00045	.00027	-.00047	.88174	-.02912	-.02868	-.02844
400.430	800.100	.06332	.07188	-.01359	.00041	.00027	-.00047	.87467	-.02929	-.02887	-.02877
400.470	900.110	.06355	.07305	-.01366	.00040	.00027	-.00047	.87501	-.02922	-.02880	-.02870
400.460	1000.200	.06314	.07303	-.01367	.00036	.00028	-.00047	.87646	-.02912	-.02870	-.02859
	GRADIENT	.00000	.00000	.00000	.00000	.00000	.00000	.00000	.00000	.00000	.00000

AEDC VA422(IA17) ORB AND ET SEPARATING(ORB DATA) (RTR108) (24 JUL 75)

REFERENCE DATA

SREF = 2690.0000 SQ.FT. XMRP = 1089.6000 IN. XO
LREF = 1290.3000 IN. YMRP = .0000 IN. YO
BREF = 1290.3000 IN. ZMRP = 375.0000 IN. ZO
SCALE = .0100

PARAMETRIC DATA

DLT-Y = .000 ALPHA = -5.000
BETA = .000 DLTALF = .000
DLTBTA = .000 MACH = 5.930
AILRON = .000 ELEVON = 15.000
GRID = 11.000

RUN NO. 542/ 0 GRADIENT INTERVAL = -5.00/ 5.00

DLT-X	DLT-Z	CN	CA	CLM	CY	CYN	CBL	XCP/L	CPB1	CPB2	CPBC
.398	19.398	-.05840	.10454	-.01328	.00235	.00003	.00017	.42494	-.02650	-.02623	-.02586
.497	101.310	-.03377	.10151	-.01000	.00189	.00034	.00000	.36381	-.02664	-.02639	-.02608
.431	201.790	-.04522	.10000	-.01601	.00129	.00019	-.00034	.30588	-.02675	-.02654	-.02629
.503	301.290	-.07858	.09223	-.02146	.00137	.00010	-.00019	.38689	-.02659	-.02650	-.02628
.429	400.230	-.11895	.08994	-.01914	.00127	.00009	-.00012	.49912	-.02666	-.02645	-.02626
.559	500.170	-.12842	.09053	-.01704	.00116	.00011	-.00012	.52731	-.02658	-.02639	-.02627
.534	600.180	-.12838	.09072	-.01707	.00128	.00011	-.00012	.52707	-.02642	-.02621	-.02613
	GRADIENT	.00000	.00000	.00000	.00000	.00000	.00000	.00000	.00000	.00000	.00000

RUN NO. 543/ 0 GRADIENT INTERVAL = -5.00/ 5.00

DLT-X	DLT-Z	CN	CA	CLM	CY	CYN	CBL	XCP/L	CPB1	CPB2	CPBC
400.490	24.048	-.00270	.09671	.00061	.00165	.00025	.00019	.00000	-.02749	-.02710	-.02639
400.450	100.160	-.02259	.10004	-.01294	.00151	.00023	-.00030	.08732	-.02667	-.02611	-.02533
400.410	197.770	-.05678	.09382	-.02163	.00146	.00013	-.00016	.27906	-.02645	-.02587	-.02515
400.430	298.260	-.10561	.09004	-.02115	.00139	.00007	-.00013	.45970	-.02636	-.02579	-.02515
400.420	399.860	-.12828	.09015	-.01711	.00118	.00010	-.00012	.52661	-.02636	-.02581	-.02522
400.460	500.150	-.12833	.09067	-.01706	.00112	.00009	-.00012	.52707	-.02636	-.02583	-.02528
400.520	600.140	-.12843	.09068	-.01708	.00116	.00010	-.00012	.52717	-.02641	-.02593	-.02542
	GRADIENT	.00000	.00000	.00000	.00000	.00000	.00000	.00000	.00000	.00000	.00000

AEDC VA422(IA17) ORB AND ET SEPARATING(ORB DATA) (RTR109) (24 JUL 75)

REFERENCE DATA

SREF = 2690.0000 SQ.FT. XMRP = 1089.6000 IN. XO
LREF = 1290.3000 IN. YMRP = .0000 IN. YO
BREF = 1290.3000 IN. ZMRP = 375.0000 IN. ZO
SCALE = .0100

PARAMETRIC DATA

DLT-Y = .000 ALPHA = -5.000
BETA = .000 DLTALF = -10.000
DLTBTA = .000 MACH = 5.930
AILRON = .000 ELEVON = 15.000
GRID = 11.000

RUN NO. 544/ 0 GRADIENT INTERVAL = -5.00/ 5.00

DLT-X	DLT-Z	CN	CA	CLM	CY	CYN	CBL	XCP/L	CPB1	CPB2	CPBC
.414	404.010	.08911	.09633	-.05112	.00287	-.00023	.00049	1.23370	-.02610	-.02564	-.02473
.401	501.100	-.07212	.08595	-.03031	.00166	-.00001	.00001	.23982	-.02700	-.02666	-.02594
.505	600.400	-.12704	.08911	-.01730	.00113	.00010	-.00012	.52381	-.02751	-.02718	-.02664
.480	750.210	-.12853	.09067	-.01706	.00121	.00007	-.00012	.52726	-.02761	-.02728	-.02682
.132	801.490	-.12840	.09067	-.01705	.00134	.00009	-.00012	.52723	-.02751	-.02718	-.02671
	GRADIENT	.00000	.00000	.00000	.00000	.00000	.00000	.00000	.00000	.00000	.00000

RUN NO. 545/ 0 GRADIENT INTERVAL = -5.00/ 5.00

DLT-X	DLT-Z	CN	CA	CLM	CY	CYN	CBL	XCP/L	CPB1	CPB2	CPBC
400.490	396.970	-.07465	.08901	-.02710	.00148	.00002	-.00016	.29696	-.02278	-.02205	-.02064
400.400	499.420	-.12509	.08910	-.01800	.00131	.00010	-.00011	.51613	-.02201	-.02126	-.01999
400.490	599.960	-.12735	.09052	-.01706	.00117	.00011	-.00012	.52601	-.02189	-.02120	-.02014
400.500	750.180	-.12795	.09067	-.01707	.00115	.00011	-.00012	.52657	-.02273	-.02218	-.02149
400.470	800.140	-.12780	.09077	-.01705	.00120	.00011	-.00011	.52661	-.02328	-.02278	-.02219
	GRADIENT	.00000	.00000	.00000	.00000	.00000	.00000	.00000	.00000	.00000	.00000

AEDC VA422(IA17) ORB AND ET SEPARATING(ORB DATA) (RTR111) (24 JUL 75)

REFERENCE DATA

SREF = 2690.0000 SQ.FT. XMRP = 1089.6000 IN. XO
LREF = 1290.3000 IN. YMRP = .0000 IN. YO
BREF = 1290.3000 IN. ZMRP = 375.0000 IN. ZO
SCALE = .0100

PARAMETRIC DATA

DLT-Y = .000 ALPHA = -5.000
BETA = .000 DLTALF = -20.000
DLTBTA = .000 MACH = 5.930
AILRON = .000 ELEVON = 15.000
GRID = 11.000

RUN NO. 552/ 0 GRADIENT INTERVAL = -5.00/ 5.00

DLT-X	DLT-Z	CN	CA	CLM	CY	CYN	CBL	XCP/L	CPB1	CPB2	CPBC
.375	804.190	.09555	.09149	-.03151	.00385	-.00057	.00128	1.19900	-.01352	-.01306	-.01199
.484	901.250	-.07151	.08412	-.02883	.00148	.00001	-.00025	.25676	-.01335	-.01298	-.01182
.417	1000.400	-.12732	.08765	-.01716	.00134	.00009	-.00012	.52522	-.01331	-.01298	-.01176
	GRADIENT	.00000	.00000	.00000	.00000	.00000	.00000	.00000	.00000	.00000	.00000

AEDC VA422(IA17) ORB AND ET SEPARATING(ORB DATA) (RTR111) (24 JUL 75)

REFERENCE DATA

SREF = 2690.0000 SQ.FT. XMRP = 1089.6000 IN. XO
LREF = 1290.3000 IN. YMRP = .0000 IN. YO
BREF = 1290.3000 IN. ZMRP = 375.0000 IN. ZO
SCALE = .0100

PARAMETRIC DATA

DLT-Y = .000 ALPHA = -5.000
BETA = .000 DLTALF = -20.000
DLTBTA = .000 MACH = 5.930
AILRON = .000 ELEVON = 15.000
GRID = 11.000

RUN NO. 546/ 0 GRADIENT INTERVAL = -5.00/ 5.00

DLT-X	DLT-Z	CN	CA	CLM	CY	CYN	CBL	XCP/L	CPB1	CPB2	CPBC
400.440	751.720	-.05579	.07448	-.02722	.00163	-.00002	.00019	.17201	-.01815	-.01778	-.01441
400.350	800.660	-.11809	.08302	-.01852	.00168	.00008	.00027	.50320	-.02430	-.02368	-.02218
400.400	900.370	-.12689	.08659	-.01730	.00122	.00010	-.00012	.52362	-.02665	-.02635	-.02586
400.320	1000.400	-.12774	.09057	-.01706	.00124	.00008	-.00012	.52647	-.02665	-.02634	-.02598
	GRADIENT	.00000	.00000	.00000	.00000	.00000	.00000	.00000	.00000	.00000	.00000

AEDC VA422(IA17) ORB AND ET SEPARATING(ORB DATA) (RTR112) (24 JUL 75)

REFERENCE DATA

SREF = 2690.0000 SQ.FT. XMRP = 1089.6000 IN. XO
LREF = 1290.3000 IN. YMRP = .0000 IN. YO
BREF = 1290.3000 IN. ZMRP = 375.0000 IN. ZO
SCALE = .0100

PARAMETRIC DATA

DLT-Y = .000 ALPHA = -10.000
BETA = .000 DLTALF = .000
DLTBTA = .000 MACH = 5.930
AILRON = .000 ELEVON = 15.000
GRID = 10.000

RUN NO. 533/ 0 GRADIENT INTERVAL = -5.00/ 5.00

DLT-X	DLT-Z	CN	CA	CLM	CY	CYN	CBL	XCP/L	CPB1	CPB2	CPBC
.454	30.997	-.08308	.12595	-.01239	.00358	.00026	.00018	.51086	-.02307	-.02225	-.02141
.398	102.550	-.09187	.11002	-.01548	.00203	.00051	.00007	.49153	-.02368	-.02292	-.02206
.413	202.040	-.13917	.10291	-.02194	.00144	.00035	-.00034	.50236	-.02440	-.02374	-.02292
.426	300.610	-.18356	.10093	-.02437	.00142	.00032	-.00034	.52725	-.02485	-.02425	-.02351
.398	400.210	-.20144	.10117	-.02143	.00132	.00035	-.00029	.55361	-.02506	-.02446	-.02381
.616	500.290	-.20195	.10178	-.02124	.00118	.00033	-.00032	.55478	-.02495	-.02434	-.02375
	GRADIENT	.00000	.00000	.00000	.00000	.00000	.00000	.00000	.00000	.00000	.00000

RUN NO. 534/ 0 GRADIENT INTERVAL = -5.00/ 5.00

DLT-X	DLT-Z	CN	CA	CLM	CY	CYN	CBL	XCP/L	CPB1	CPB2	CPBC
400.480	31.769	-.06784	.11114	-.00396	.00259	.00062	.00013	.60168	-.02321	-.02223	-.02090
400.430	97.707	-.08523	.10766	-.01758	.00177	.00032	-.00023	.45373	-.02206	-.02100	-.01967
400.510	197.140	-.14986	.10211	-.02492	.00142	.00039	-.00040	.49373	-.02085	-.01980	-.01853
400.440	298.810	-.19196	.10045	-.02332	.00136	.00032	-.00030	.53851	-.02044	-.01943	-.01843
400.450	399.840	-.20166	.10130	-.02129	.00124	.00031	-.00031	.55444	-.02039	-.01943	-.01860
400.450	500.150	-.20178	.10158	-.02123	.00130	.00033	-.00032	.55481	-.02066	-.01980	-.01912
	GRADIENT	.00000	.00000	.00000	.00000	.00000	.00000	.00000	.00000	.00000	.00000

ORIGINAL PAGE IS OF POOR QUALITY

AEDC VA422(IA17) ORB AND ET SEPARATING(ORB DATA) (RTR113) (24 JUL 75)

REFERENCE DATA

SREF = 2690.0000 SQ.FT. XMRP = 1089.6000 IN. XO
LREF = 1290.3000 IN. YMRP = .0000 IN. YO
BREF = 1290.3000 IN. ZMRP = 375.0000 IN. ZO
SCALE = .0100

PARAMETRIC DATA

DLT-Y = .000 ALPHA = -10.000
BETA = .000 DLTALF = -10.000
DLTBTA = .000 MACH = 5.930
AILRON = .000 ELEVON = 15.000
GRID = 10.000

RUN NO. 535/ 0 GRADIENT INTERVAL = -5.00/ 5.00

DLT-X	DLT-Z	CN	CA	CLM	CY	CYN	CBL	XCP/L	CPB1	CPB2	CPBC
.413	402.740	.00146	.10457	-.05412	.00359	-.00007	.00151	.00000	-.02001	-.01915	-.01774
.482	502.280	-.07968	.09609	-.04488	.00239	-.00014	.00077	.09677	-.02170	-.02089	-.01940
.317	600.600	-.18371	.09676	-.02504	.00157	.00033	.00021	.52370	-.02396	-.02333	-.02237
.524	700.200	-.20108	.10049	-.02142	.00117	.00032	-.00031	.55349	-.02433	-.02378	-.02307
.482	801.380	-.20218	.10166	-.02126	.00120	.00032	-.00031	.55486	-.02416	-.02362	-.02296
	GRADIENT	.00000	.00000	.00000	.00000	.00000	.00000	.00000	.00000	.00000	.00000

RUN NO. 536/ 0 GRADIENT INTERVAL = -5.00/ 5.00

DLT-X	DLT-Z	CN	CA	CLM	CY	CYN	CBL	XCP/L	CPB1	CPB2	CPBC
400.400	397.230	-.14274	.09764	-.03416	.00167	.00033	-.00031	.42067	-.01515	-.01431	-.01233
400.410	499.430	-.19727	.09924	-.02206	.00128	.00033	-.00029	.54819	-.01392	-.01307	-.01137
400.230	600.150	-.19993	.10008	-.02158	.00112	.00034	-.00031	.55204	-.01367	-.01278	-.01154
400.220	700.170	-.20129	.10148	-.02127	.00114	.00032	-.00030	.55434	-.01427	-.01341	-.01261
400.520	800.280	-.20123	.10156	-.02125	.00120	.00033	-.00030	.55441	-.01560	-.01482	-.01434
	GRADIENT	.00000	.00000	.00000	.00000	.00000	.00000	.00000	.00000	.00000	.00000

AEDC VA422(IA17) ORB AND ET SEPARATING(ORB DATA) (RTR114) (24 JUL 75)

REFERENCE DATA

SREF = 2690.0000 SQ.FT. XMRP = 1089.6000 IN. XO
LREF = 1290.3000 IN. YMRP = .0000 IN. YO
BREF = 1290.3000 IN. ZMRP = 375.0000 IN. ZO
SCALE = .0100

PARAMETRIC DATA

DLT-Y = .000 ALPHA = 10.000
BETA = .000 DLTALF = -5.000
DLTBTA = .000 MACH = 5.930
AILRON = .000 ELEVON = .000
GRID = 23.000

RUN NO. 643/ 0 GRADIENT INTERVAL = -5.00/ 5.00

DLT-X	DLT-Z	CN	CA	CLM	CY	CYN	CBL	XCP/L	CPB1	CPB2	CPBC
.657	199.730	.17125	.06890	.00139	.00119	-.00010	.00071	.65186	-.03016	-.02961	-.02939
.611	298.630	.15196	.06429	.01531	.00027	.00025	-.00029	.55924	-.03002	-.02946	-.02922
.677	399.420	.20532	.06917	.00956	.00058	.00012	-.00021	.61343	-.02986	-.02926	-.02901
.630	500.830	.26637	.07201	-.00682	.00099	.00007	-.00057	.68561	-.02979	-.02917	-.02887
.660	602.190	.27341	.06297	-.01940	.00117	-.00001	.00008	.73095	-.02987	-.02925	-.02892
.589	700.710	.19517	.05949	-.01325	.00102	-.00001	.00010	.72787	-.03015	-.02953	-.02921
-.258	802.520	.15678	.06052	-.00608	.00068	.00000	-.00004	.69879	-.03048	-.02992	-.02968
	GRADIENT	.00000	.00000	.00000	.00000	.00000	.00000	.00000	.00000	.00000	.00000

RUN NO. 644/ 0 GRADIENT INTERVAL = -5.00/ 5.00

DLT-X	DLT-Z	CN	CA	CLM	CY	CYN	CBL	XCP/L	CPB1	CPB2	CPBC
200.590	200.920	.18027	.06129	.00589	.00113	.00011	.00037	.62733	-.03126	-.03079	-.03067
200.530	300.570	.19516	.06873	.01231	.00043	.00019	-.00044	.59693	-.03141	-.03094	-.03080
200.620	400.950	.26521	.07280	-.00447	.00098	.00013	-.00065	.67685	-.03143	-.03093	-.03078
200.530	499.270	.28436	.06391	-.01900	.00130	.00001	.00016	.72680	-.03148	-.03097	-.03083
200.650	597.780	.20911	.05966	-.01509	.00097	-.00001	.00015	.73218	-.03150	-.03099	-.03082
200.600	698.900	.16074	.06047	-.00728	.00082	.00001	-.00003	.70531	-.03149	-.03095	-.03075
200.660	799.970	.15325	.06193	-.00477	.00072	.00001	-.00004	.69115	-.03127	-.03070	-.03042
	GRADIENT	.00000	.00000	.00000	.00000	.00000	.00000	.00000	.00000	.00000	.00000

AEDC VA422(IA17) ORB AND ET SEPARATING(ORB DATA) (RTR115) (24 JUL 75)

REFERENCE DATA

SREF = 2690.0000 SQ.FT. XMRP = 1089.8000 IN. XO
LREF = 1290.3000 IN. YMRP = .0000 IN. YO
BREF = 1290.3000 IN. ZMRP = 375.0000 IN. ZO
SCALE = .0100

PARAMETRIC DATA

DLT-Y = .000 ALPHA = 10.000
BETA = .000 DLTALF = -10.000
DLTBTA = .000 MACH = 5.930
AILRON = .000 ELEVON = .000
GRID = 23.000

RUN NO. 645/ 0 GRADIENT INTERVAL = -5.00/ 5.00

DLT-X	DLT-Z	CN	CA	CLM	CY	CYN	CBL	XCP/L	CPB1	CPB2	CPBC
.472	399.480	.22945	.05816	.00848	.00112	.00004	-.00004	.62308	-.02894	-.02826	-.02785
.561	499.940	.26422	.07193	.00074	.00094	.00019	-.00072	.65721	-.02877	-.02806	-.02759
.649	602.520	.31332	.07168	-.01748	.00172	-.00017	-.00031	.71580	-.02875	-.02800	-.02748
.622	701.760	.25232	.06078	-.02070	.00104	-.00007	.00052	.74204	-.02881	-.02802	-.02745
-.983	805.230	.17562	.05942	-.01060	.00079	.00001	.00000	.72039	-.02910	-.02826	-.02767
	GRADIENT	.00000	.00000	.00000	.00000	.00000	.00000	.00000	.00000	.00000	.00000

RUN NO. 646/ 0 GRADIENT INTERVAL = -5.00/ 5.00

DLT-X	DLT-Z	CN	CA	CLM	CY	CYN	CBL	XCP/L	CPB1	CPB2	CPBC
200.490	400.590	.26134	.07058	.00316	.00074	.00029	-.00084	.64790	-.02983	-.02921	-.02892
200.670	500.550	.31681	.07302	-.01525	.00193	-.00020	-.00045	.70815	-.02973	-.02906	-.02873
200.540	597.620	.26869	.06170	-.02216	.00114	-.00005	.00041	.74248	-.02970	-.02903	-.02872
200.550	698.020	.18479	.05933	-.01210	.00094	-.00001	.00009	.72546	-.02968	-.02901	-.02872
200.540	799.530	.15379	.06052	-.00497	.00072	.00002	-.00005	.69231	-.02959	-.02894	-.02860
	GRADIENT	.00000	.00000	.00000	.00000	.00000	.00000	.00000	.00000	.00000	.00000

RUN NO. 647/ 0 GRADIENT INTERVAL = -5.00/ 5.00

DLT-X	DLT-Z	CN	CA	CLM	CY	CYN	CBL	XCP/L	CPB1	CPB2	CPBC
400.480	402.270	.32749	.07244	-.01509	.00206	-.00020	-.00023	.70609	-.02788	-.02708	-.02651
400.530	502.110	.27820	.06205	-.02290	.00138	-.00006	.00068	.74233	-.02794	-.02709	-.02643
400.480	600.720	.19378	.05893	-.01320	.00097	-.00002	.00011	.72814	-.02821	-.02734	-.02682
400.470	700.080	.15563	.05988	-.00546	.00071	.00002	-.00004	.69511	-.02862	-.02778	-.02721
400.530	800.010	.15382	.06170	-.00476	.00081	.00002	-.00004	.69094	-.02876	-.02793	-.02734
	GRADIENT	.00000	.00000	.00000	.00000	.00000	.00000	.00000	.00000	.00000	.00000

AEDC VA422(IA17) ORB AND ET SEPARATING(ORB DATA) (RTR118) (24 JUL 75)

REFERENCE DATA

SREF = 2690.0000 SQ.FT. XMRP = 1089.6000 IN. XO
LREF = 1290.3000 IN. YMRP = .0000 IN. YO
BREF = 1290.3000 IN. ZMRP = 375.0000 IN. ZO
SCALE = .0100

PARAMETRIC DATA

DLT-Y = .000 ALPHA = 10.000
BETA = .000 DLTALF = -15.000
DLTBTA = .000 MACH = 5.930
AILRON = .000 ELEVON = .000
GRID = 23.000

RUN NO. 651/ 0 GRADIENT INTERVAL = -5.00/ 5.00

DLT-X	DLT-Z	CN	CA	CLM	CY	CYN	CBL	XCP/L	CPB1	CPB2	CPBC
.442	501.760	.36660	.07164	-.00602	.00218	-.00005	.00161	.67642	-.02828	-.02775	-.02738
.458	601.060	.33203	.07310	-.01100	.00163	.00005	-.00048	.69312	-.02820	-.02765	-.02725
.534	703.200	.33935	.06476	-.02600	.00146	-.00008	.00011	.73662	-.02811	-.02757	-.02712
.457	800.010	.23474	.05874	-.02011	.00103	-.00006	.00046	.74569	-.02819	-.02766	-.02722
	GRADIENT	.00000	.00000	.00000	.00000	.00000	.00000	.00000	.00000	.00000	.00000

RUN NO. 652/ 0 GRADIENT INTERVAL = -5.00/ 5.00

DLT-X	DLT-Z	CN	CA	CLM	CY	CYN	CBL	XCP/L	CPB1	CPB2	CPBC
200.560	499.220	.39976	.06890	-.02858	.00231	-.00007	-.00017	.73149	-.02980	-.02934	-.02915
200.490	598.890	.35433	.06699	-.02527	.00200	-.00014	.00048	.73132	-.02996	-.02948	-.02926
200.540	696.650	.25008	.05934	-.02259	.00121	-.00005	.00054	.75034	-.02993	-.02942	-.02915
200.590	798.390	.17170	.05945	-.01011	.00076	.00001	.00000	.71888	-.02976	-.02923	-.02892
	GRADIENT	.00000	.00000	.00000	.00000	.00000	.00000	.00000	.00000	.00000	.00000

RUN NO. 653/ 0 GRADIENT INTERVAL = -5.00/ 5.00

DLT-X	DLT-Z	CN	CA	CLM	CY	CYN	CBL	XCP/L	CPB1	CPB2	CPBC
400.450	503.160	.35914	.06352	-.02576	.00194	-.00009	.00045	.73173	-.02769	-.02702	-.02638
400.440	801.900	.26050	.05923	-.02414	.00130	-.00003	.00060	.75268	-.02782	-.02715	-.02647
400.480	700.260	.17764	.05902	-.01136	.00083	.00001	.00002	.72393	-.02820	-.02753	-.02685
400.560	799.870	.15401	.06086	-.00472	.00063	.00003	-.00004	.69062	-.02880	-.02817	-.02754
	GRADIENT	.00000	.00000	.00000	.00000	.00000	.00000	.00000	.00000	.00000	.00000

AEDC VA422(IA17) ORB AND ET SEPARATING(ORB DATA) (RTR117) (24 JUL 75)

REFERENCE DATA

SREF = 2690.0000 SQ.FT. XMRP = 1089.6000 IN. XO
LREF = 1290.3000 IN. YMRP = .0000 IN. YO
BREF = 1290.3000 IN. ZMRP = 375.0000 IN. ZO
SCALE = .0100

PARAMETRIC DATA

DLT-Y = .000 ALPHA = 10.000
BETA = .000 DLTALF = -20.000
DLTBTA = .000 MACH = 5.930
AILRON = .000 ELEVON = .000
GRID = 23.000

RUN NO. 654/ 0 GRADIENT INTERVAL = -5.00/ 5.00

DLT-X	DLT-Z	CN	CA	CLM	CY	CYN	CBL	XCP/L	CPB1	CPB2	CPBC
.486	803.580	.37956	.06013	-.04202	.00216	-.00022	.00104	.77069	-.02522	-.02466	-.02407
.465	901.340	.22641	.05712	-.02001	.00102	-.00002	.00018	.74839	-.02535	-.02476	-.02413
.486	999.860	.16266	.05954	-.00764	.00080	.00000	-.00002	.70697	-.02565	-.02500	-.02436
	GRADIENT	.00000	.00000	.00000	.00000	.00000	.00000	.00000	.00000	.00000	.00000

RUN NO. 655/ 0 GRADIENT INTERVAL = -5.00/ 5.00

DLT-X	DLT-Z	CN	CA	CLM	CY	CYN	CBL	XCP/L	CPB1	CPB2	CPBC
200.550	796.920	.23744	.05730	-.02261	.00103	-.00004	.00019	.75523	-.02552	-.02482	-.02433
200.530	898.780	.16547	.05956	-.00864	.00073	.00001	-.00002	.71222	-.02554	-.02480	-.02435
200.600	1000.100	.15444	.06135	-.00477	.00068	.00002	-.00004	.69090	-.02551	-.02476	-.02430
	GRADIENT	.00000	.00000	.00000	.00000	.00000	.00000	.00000	.00000	.00000	.00000

RUN NO. 656/ 0 GRADIENT INTERVAL = -5.00/ 5.00

DLT-X	DLT-Z	CN	CA	CLM	CY	CYN	CBL	XCP/L	CPB1	CPB2	CPBC
400.470	800.070	.16745	.05908	-.00904	.00074	.00003	-.00002	.71401	-.02646	-.02578	-.02546
400.420	899.940	.15467	.06128	-.00478	.00076	.00003	-.00004	.69088	-.02623	-.02555	-.02525
400.490	1000.100	.15485	.06193	-.00482	.00060	.00001	-.00004	.69114	-.02586	-.02516	-.02481
	GRADIENT	.00000	.00000	.00000	.00000	.00000	.00000	.00000	.00000	.00000	.00000

AEDC VA422(IA17) ORB AND ET SEPARATING(ORB DATA) (RTR118) (24 JUL 75)

REFERENCE DATA

SREF = 2690.0000 SQ.FT. XMRP = 1089.6000 IN. XO
LREF = 1290.3000 IN. YMRP = .0000 IN. YO
BREF = 1290.3000 IN. ZMRP = 375.0000 IN. ZO
SCALE = .0100

PARAMETRIC DATA

DLT-Y = .000 ALPHA = 10.000
BETA = 3.000 DLTALF = -5.000
DLTBTA = .000 MACH = 5.930
AILRON = .000 ELEVON = .000
GRID = 27.000

RUN NO. 673/ 0 GRADIENT INTERVAL = -5.00/ 5.00

DLT-X	DLT-Z	CN	CA	CLM	CY	CYN	CBL	XCP/L	CPB1	CPB2	CPBC
.604	198.810	.15866	.06916	.00036	-.03089	-.00380	-.00341	.65773	-.02854	-.02818	-.02852
.498	298.650	.15936	.06559	.01564	-.03344	-.00262	-.00497	.56188	-.02817	-.02782	-.02819
.773	399.310	.21217	.06960	.00933	-.03293	-.00146	-.00595	.61600	-.02778	-.02743	-.02782
.607	501.050	.27282	.07206	-.00727	-.03065	-.00149	-.00628	.66866	-.02744	-.02705	-.02749
.634	602.200	.27644	.06412	-.02007	-.02584	-.00259	.00085	.73258	-.02711	-.02670	-.02722
.750	700.670	.19945	.05968	-.01421	-.02720	-.00230	-.00027	.73123	-.02681	-.02635	-.02698
-.109	802.640	.15672	.06[illegible]7	-.00616	-.02756	-.00238	-.00173	.69931	-.02649	-.02599	-.02676
	GRADIENT	.00000	.00000	.00000	.00000	.00000	.00000	.00000	.00000	.00000	.00000

RUN NO. 674/ 0 GRADIENT INTERVAL = -5.00/ 5.00

DLT-X	DLT-Z	CN	CA	CLM	CY	CYN	CBL	XCP/L	CPB1	CPB2	CPBC
200.460	201.550	.18133	.06202	.00699	-.03220	-.00301	-.00422	.62144	-.03025	-.02991	-.03016
200.600	300.630	.20192	.06943	.01207	-.03306	-.00157	-.00593	.60024	-.03045	-.03013	-.03033
200.670	400.840	.27086	.07300	-.00466	-.03112	-.00141	-.00627	.67721	-.03052	-.03021	-.03036
200.630	499.110	.28680	.06501	-.01999	-.02624	-.00242	-.00017	.72970	-.03064	-.03033	-.03045
200.600	597.710	.21262	.05986	-.01622	-.02735	-.00224	-.00022	.73630	-.03078	-.03048	-.03056
200.640	699.010	.16136	.06093	-.00760	-.02747	-.00236	-.00168	.70710	-.03080	-.03051	-.03051
200.700	799.880	.15303	.06182	-.00482	-.02774	-.00232	-.00174	.69149	-.03081	-.03053	-.03044
	GRADIENT	.00000	.00000	.00000	.00000	.00000	.00000	.00000	.00000	.00000	.00000

AEDC VA422(IA17) ORB AND ET SEPARATING(ORB DATA) (RTR119) (24 JUL 75)

REFERENCE DATA

SREF = 2690.0000 SQ.FT. XMRP = 1089.6000 IN. XO
LREF = 1290.3000 IN. YMRP = .0000 IN. YO
BREF = 1290.3000 IN. ZMRP = 375.0000 IN. ZO
SCALE = .0100

PARAMETRIC DATA

DLT-Y = .000 ALPHA = 10.000
BETA = 3.000 DLTALF = -10.000
DLTBTA = .000 MACH = 5.930
AILR(= .000 ELEVON = .000
GRID = 27.000

RUN NO. 675/ 0 GRADIENT INTERVAL = -5.00/ 5.00

DLT-X	DLT-Z	CN	CA	CLM	CY	CYN	CBL	XCP/L	CPB1	CPB2	CPBC
.453	399.470	.23462	.06683	.00871	-.03225	-.00216	-.00519	.62288	-.02911	-.02894	-.02852
.586	500.290	.27249	.07300	-.00008	-.03239	-.00103	-.00670	.66028	-.02889	-.02873	-.02825
.684	602.340	.30762	.06912	-.01729	-.02544	-.00264	-.00410	.71622	-.02876	-.02859	-.02810
.676	701.650	.25109	.06095	-.02123	-.02619	-.00247	.00170	.74456	-.02870	-.02852	-.02803
-.927	805.220	.17607	.05980	-.01097	-.02734	-.00238	-.00118	.72228	-.02870	-.02851	-.02800
	GRADIENT	.00000	.00000	.00000	.00000	.00000	.00000	.00000	.00000	.00000	.00000

RUN NO. 676/ 0 GRADIENT INTERVAL = -5.00/ 5.00

DLT-X	DLT-Z	CN	CA	CLM	CY	CYN	CBL	XCP/L	CPB1	CPB2	CPBC
200.560	400.480	.26681	.07185	.00303	-.03273	-.00104	-.00675	.64865	-.02986	-.02973	-.02932
200.720	500.130	.31564	.07128	-.01530	-.02703	-.00237	-.00506	.70847	-.02974	-.02962	-.02913
200.600	597.640	.26763	.06177	-.02276	-.02624	-.00238	.00133	.74503	-.02967	-.02954	-.02908
200.530	698.010	.18572	.05960	-.01266	-.02729	-.00232	-.00093	.72815	-.02977	-.02963	-.02919
200.560	799.500	.15257	.06015	-.00473	-.02766	-.00236	-.00175	.69097	-.02976	-.02964	-.02915
	GRADIENT	.00000	.00000	.00000	.00000	.00000	.00000	.00000	.00000	.00000	.00000

RUN NO. 677/ 0 GRADIENT INTERVAL = -5.00/ 5.00

DLT-X	DLT-Z	CN	CA	CLM	CY	CYN	CBL	XCP/L	CPB1	CPB2	CPBC
400.610	402.330	.32713	.07091	-.01545	-.02635	-.00257	-.00445	.70722	-.02714	-.02699	-.02634
400.570	502.000	.27772	.06209	-.02377	-.02655	-.00231	.00119	.74561	-.02699	-.02686	-.02610
400.520	600.640	.19410	.05905	-.01385	-.02740	-.00229	-.00086	.73135	-.02719	-.02706	-.02620
400.510	700.060	.15407	.05965	-.00520	-.02761	-.00238	-.00175	.69378	-.02776	-.02764	-.02689
400.510	800.020	.15343	.06176	-.00481	-.02776	-.00231	-.00174	.69132	-.02814	-.02799	-.02717
	GRADIENT	.00000	.00000	.00000	.00000	.00000	.00000	.00000	.00000	.00000	.00000

AEDC VA422(IA17) ORB AND ET SEPARATING(ORB DATA) (RTR120) (24 JUL 75)

REFERENCE DATA

SREF = 2690.0000 SQ.FT. XMRP = 1089.6000 IN. XO
LREF = 1290.3000 IN. YMRP = .0000 IN. YO
BREF = 1290.3000 IN. ZMRP = 375.0000 IN. ZO
SCALE = .0100

PARAMETRIC DATA

DLT-Y = .000 ALPHA = 10.000
BETA = 3.000 DLTALF = -15.000
DLTBTA = .000 MACH = 5.930
AILRON = .000 ELEVON = .000
GRID = 27.000

RUN NO. 681/ 0 GRADIENT INTERVAL = -5.00/ 5.00

DLT-X	DLT-Z	CN	CA	CLM	CY	CYN	CBL	XCP/L	CPB1	CPB2	CPBC
.627	501.600	.36647	.07244	-.00596	-.03241	-.00138	-.00557	.67625	-.02891	-.02880	-.02812
.514	601.800	.34340	.07350	-.01288	-.03042	-.00138	-.00659	.69751	-.02884	-.02874	-.02806
.561	702.940	.33104	.06672	-.02707	-.02332	-.00307	.00073	.74179	-.02884	-.02872	-.02803
.547	800.010	.23229	.05882	-.02043	-.02623	-.00239	.00142	.74796	-.02886	-.02874	-.02811
	GRADIENT	.00000	.00000	.00000	.00000	.00000	.00000	.00000	.00000	.00000	.00000

RUN NO. 682/ 0 GRADIENT INTERVAL = -5.00/ 5.00

DLT-X	DLT-Z	CN	CA	CLM	CY	CYN	CBL	XCP/L	CPB1	CPB2	CPBC
200.870	499.450	.40000	.07014	-.02706	-.03027	-.00135	-.00680	.72770	-.03023	-.03009	-.02968
200.530	598.470	.34938	.06828	-.02681	-.02374	-.00289	-.00043	.73673	-.03030	-.03016	-.02970
200.550	696.800	.24754	.05932	-.02305	-.02634	-.00235	.00138	.75312	-.03024	-.03013	-.02956
200.650	798.480	.17090	.05979	-.01025	-.02712	-.00243	-.00145	.71998	-.03016	-.03008	-.02951
	GRADIENT	.00000	.00000	.00000	.00000	.00000	.00000	.00000	.00000	.00000	.00000

RUN NO. 683/ 0 GRADIENT INTERVAL = -5.00/ 5.00

DLT-X	DLT-Z	CN	CA	CLM	CY	CYN	CBL	XCP/L	CPB1	CPB2	CPBC
400.400	503.030	.36070	.06469	-.02832	-.02468	-.00255	.00081	.73851	-.02796	-.02781	-.02700
400.500	601.730	.25792	.05897	-.02463	-.02653	-.00227	.00130	.75550	-.02811	-.02795	-.02708
400.500	700.210	.17724	.05938	-.01175	-.02709	-.00239	-.00133	.72629	-.02863	-.02849	-.02752
400.640	799.990	.15272	.05988	-.00458	-.02766	-.00237	-.00177	.68997	-.02957	-.02944	-.02865
	GRADIENT	.00000	.00000	.00000	.00000	.00000	.00000	.00000	.00000	.00000	.00000

AEDC VA422(IA17) ORB AND ET SEPARATING(ORB DATA) (RTR121) (24 JUL 75)

REFERENCE DATA

SREF = 2690.0000 SQ.FT. XMRP = 1089.6000 IN. XO
LREF = 1290.3000 IN. YMRP = .0000 IN. YO
BREF = 1290.3000 IN. ZMRP = 375.0000 IN. ZO
SCALE = .0100

PARAMETRIC DATA

DLT-Y = .000 ALPHA = 10.000
BETA = 3.000 DLTALF = -20.000
DLTBTA = .000 MACH = 5.930
AILRON = .000 ELEVON = .000
GRID = 27.000

RUN NO. 684/ 0 GRADIENT INTERVAL = -5.00/ 5.00

DLT-X	DLT-Z	CN	CA	CLM	CY	CYN	CBL	XCP/L	CPB1	CPB2	CPBC
.538	803.460	.37696	.05974	-.04343	-.02370	-.00281	.00483	.77521	-.02538	-.02496	-.02415
.529	901.250	.22311	.05686	-.01999	-.02621	-.00235	.00050	.74958	-.02555	-.02514	-.02433
.486	999.990	.15943	.05971	-.00687	-.02721	-.00242	-.00173	.70310	-.02574	-.02540	-.02457
	GRADIENT	.00000	.00000	.00000	.00000	.00000	.00000	.00000	.00000	.00000	.00000

RUN NO. 685/ 0 GRADIENT INTERVAL = -5.00/ 5.00

DLT-X	DLT-Z	CN	CA	CLM	CY	CYN	CBL	XCP/L	CPB1	CPB2	CPBC
200.530	797.110	.23560	.05716	-.02294	-.02616	-.00232	.00052	.75736	-.02512	-.02482	-.02396
200.540	898.920	.16299	.05961	-.00815	-.02714	-.00240	-.00166	.71001	-.02502	-.02480	-.02392
200.570	1000.100	.15352	.06098	-.00476	-.02769	-.00233	-.00174	.69101	-.02498	-.02472	-.02386
	GRADIENT	.00000	.00000	.00000	.00000	.00000	.00000	.00000	.00000	.00000	.00000

RUN NO. 686/ 0 GRADIENT INTERVAL = -5.00/ 5.00

DLT-X	DLT-Z	CN	CA	CLM	CY	CYN	CBL	XCP/L	CPB1	CPB2	CPBC
400.610	800.230	.16551	.05904	-.00880	-.02730	-.00243	-.00166	.71317	-.02555	-.02543	-.02480
400.530	899.970	.15390	.06087	-.00473	-.02773	-.00234	-.00175	.69072	-.02539	-.02522	-.02464
400.580	1000.100	.15436	.06220	-.00486	-.02795	-.00229	-.00174	.69150	-.02502	-.02483	-.02413
	GRADIENT	.00000	.00000	.00000	.00000	.00000	.00000	.00000	.00000	.00000	.00000

AEDC VA422(IA17) ORB AND ET SEPARATING(ORB DATA) (RTR122) (24 JUL 75)

REFERENCE DATA

SREF = 2690.0000 SQ.FT. XMRP = 1089.6000 IN. XO
LREF = 1290.3000 IN. YMRP = .0000 IN. YO
BREF = 1290.3000 IN. ZMRP = 375.0000 IN. ZO
SCALE = .0100

PARAMETRIC DATA

DLT-Y = .000 ALPHA = .000
BETA = .000 DLTALF = .000
DLTBTA = .000 MACH = 7.980
AILRON = .000 ELEVON = .000
GRID = 16.000

RUN NO. 717/ 0 GRADIENT INTERVAL = -5.00/ 5.00

DLT-X	DLT-Z	CN	CA	CLM	CY	CYN	CBL	XCP/L	CPB1	CPB2	CPBC
.435	18.419	-.02695	.07567	-.01230	.00043	.00007	.00011	.20340	-.01296	-.01235	-.01274
.518	99.435	-.01124	.08748	-.00166	.00107	.00047	.00027	.51232	-.01286	-.01228	-.01270
.464	201.340	.02240	.08514	-.00482	.00124	.00012	-.00034	.87529	-.01275	-.01217	-.01265
.443	302.350	.01934	.07409	-.01545	.00093	.00029	.00019	1.45870	-.01268	-.01209	-.01261
.587	400.450	-.03335	.07216	-.01492	.00046	.00030	-.00007	.21254	-.01257	-.01197	-.01258
.519	500.140	-.05149	.07291	-.01156	.00050	.00031	-.00008	.43543	-.01245	-.01184	-.01253
	GRADIENT	.00000	.00000	.00000	.00000	.00000	.00000	.00000	.00000	.00000	.00000

RUN NO. 718/ 0 GRADIENT INTERVAL = -5.00/ 5.00

DLT-X	DLT-Z	CN	CA	CLM	CY	CYN	CBL	XCP/L	CPB1	CPB2	CPBC
200.390	23.594	-.00203	.08692	.00233	.00150	.00059	.00041	.00000	-.01396	-.01338	-.01387
200.550	99.538	.00748	.08306	.00145	.00083	.00041	-.00018	.46666	-.01410	-.01353	-.01401
200.490	199.400	.03386	.08174	-.01033	.00069	.00037	-.00014	.96504	-.01403	-.01345	-.01377
200.460	297.840	-.00472	.07302	-.01594	.00058	.00031	-.00006	-2.71550	-.01392	-.01332	-.01357
200.420	398.620	-.04515	.07250	-.01338	.00047	.00030	-.00008	.36372	-.01387	-.01327	-.01349
200.530	500.030	-.05208	.07331	-.01141	.00035	.00031	-.00008	.44088	-.01384	-.01324	-.01340
	GRADIENT	.00000	.00000	.00000	.00000	.00000	.00000	.00000	.00000	.00000	.00000

ORIGINAL PAGE IS OF POOR QUALITY

AEDC VA422(IA17) ORB AND ET SEPARATING(ORB DATA) (RTR123) (24 JUL 75)

REFERENCE DATA

SREF = 2690.0000 SQ.FT. XMRP = 1089.6000 IN. XO
LREF = 1290.3000 IN. YMRP = .0000 IN. YO
BREF = 1290.3000 IN. ZMRP = 375.0000 IN. ZO
SCALE = .0100

PARAMETRIC DATA

DLT-Y = .000 ALPHA = .000
BETA = .000 DLTALF = -5.000
DLTBTA = .000 MACH = 7.990
AILRON = .000 ELEVON = .000
GRID = 16.000

RUN NO. 721/ 0 GRADIENT INTERVAL = -5.00/ 5.00

DLT-X	DLT-Z	CN	CA	CLM	CY	CYN	CBL	XCP/L	CPB1	CPB2	CPBC
.509	204.310	.13227	.08481	-.00556	.00247	.00042	.00056	.70201	-.01335	-.01294	-.01276
.502	302.860	.05677	.08121	-.01232	.00067	.00031	-.00010	.87705	-.01379	-.01311	-.01298
.463	401.680	.00444	.07205	-.01723	.00043	.00030	.00005	4.54090	-.01382	-.01314	-.01307
.452	500.250	-.04323	.07197	-.01344	.00036	.00031	-.00008	.34907	-.01385	-.01319	-.01314
-.033	599.110	-.05108	.07295	-.01134	.00035	.00031	-.00008	.43795	-.01385	-.01318	-.01315
	GRADIENT	.00000	.00000	.00000	.00000	.00000	.00000	.00000	.00000	.00000	.00000

RUN NO. 722/ 0 GRADIENT INTERVAL = -5.00/ 5.00

DLT-X	DLT-Z	CN	CA	CLM	CY	CYN	CBL	XCP/L	CPB1	CPB2	CPBC
200.480	198.560	.14122	.07948	-.02184	.00106	.00017	.00037	.81467	-.01380	-.01298	-.01290
200.440	296.560	.05119	.07500	-.01689	.00084	.00029	-.00002	.98998	-.01369	-.01281	-.01262
200.430	397.020	-.02019	.07166	-.01631	.00048	.00029	-.00003	-.14786	-.01348	-.01255	-.01232
200.410	499.380	-.04994	.07234	-.01180	.00036	.00030	-.00008	.42369	-.01334	-.01241	-.01216
200.450	600.080	-.05135	.07055	-.01136	.00028	.00031	-.00008	.43878	-.01320	-.01227	-.01199
	GRADIENT	.00000	.00000	.00000	.00000	.00000	.00000	.00000	.00000	.00000	.00000

AEDC VA422(IA17) ORB AND ET SEPARATING(ORB DATA) (RTR124) (24 JUL 75)

REFERENCE DATA

SREF = 2690.0000 SQ.FT. XMRP = 1089.6000 IN. XO
LREF = 1290.3000 IN. YMRP = .0000 IN. YO
BREF = 1290.3000 IN. ZMRP = 375.0000 IN. ZO
SCALE = .0100

PARAMETRIC DATA

DLT-Y = .000 ALPHA = .000
BETA = .000 DLTALF = -10.000
DLTBTA = .000 MACH = 7.980
AILRON = .000 ELEVON = .000
GRID = 16.000

RUN NO. 723/ 0 GRADIENT INTERVAL = -5.00/ 5.00

DLT-X	DLT-Z	CN	CA	CLM	CY	CYN	CBL	XCP/L	CPB1	CPB2	CPBC
.540	404.290	.11973	.07220	-.03059	.00143	.00010	.00033	.91550	-.00640	-.00590	-.00520
.545	501.170	-.00691	.07038	-.01792	.00033	.00029	-.00008	-1.93430	-.00588	-.00541	-.00444
.587	600.200	-.04795	.07164	-.01214	.00034	.00031	-.00008	.40675	-.00565	-.00516	-.00372
.585	750.060	-.05169	.06955	-.01142	.00033	.00032	-.00008	.43912	-.00756	-.00685	-.00560
-.040	802.280	-.05179	.07131	-.01133	.00044	.00033	-.00008	.44124	-.00793	-.00720	-.00603
	GRADIENT	.00000	.00000	.00000	.00000	.00000	.00000	.00000	.00000	.00000	.00000

PRECEDING PAGE BLANK NOT FILMED

AEDC VA422(1A17) ORB AND ET SEPARATING(ORB DATA) (RTR127) (24 JUL 75)

REFERENCE DATA

SREF = 2690.0000 SQ.FT. XMRP = 1089.6000 IN. XO
LREF = 1290.3000 IN. YMRP = .0000 IN. YO
BREF = 1290.3000 IN. ZMRP = 375.0000 IN. ZO
SCALE = .0100

PARAMETRIC DATA

DLT-Y = .000 ALPHA = .000
BETA = .000 DLTALF = -20.000
DLTBTA = .000 MACH = 7.980
AILRON = .000 ELEVON = .000
GRID = 16.000

RUN NO. 732/ 0 GRADIENT INTERVAL = -5.00/ 5.00

DLT-X	DLT-Z	CN	CA	CLM	CY	CYN	CBL	XCP/L	CPB1	CPB2	CPBC
200.330	751.400	.03313	.06244	-.03137	.00143	.00008	.00032	1.60700	.00203	.00234	.00251
200.350	800.420	-.03351	.06731	-.01585	.00084	.00019	-.00009	.18693	.00234	.00257	.00272
200.370	900.400	-.04920	.06933	-.01132	.00070	.00022	-.00007	.42991	.00266	.00289	.00307
200.390	1000.200	-.04936	.07000	-.01129	.00069	.00024	-.00007	.43130	.00337	.00361	.00388
	GRADIENT	.00000	.00000	.00000	.00000	.00000	.00000	.00000	.00000	.00000	.00000

RUN NO. 733/ 0 GRADIENT INTERVAL = -5.00/ 5.00

DLT-X	DLT-Z	CN	CA	CLM	CY	CYN	CBL	XCP/L	CPB1	CPB2	CPBC
400.420	748.880	-.04874	.06763	-.01144	.00061	.00024	-.00006	.42536	.00235	.00278	.00367
400.590	800.560	-.04882	.06925	-.01124	.00063	.00023	-.00007	.42973	.00313	.00355	.00452
400.410	900.290	-.04892	.06916	-.01128	.00063	.00024	-.00007	.42942	.00286	.00328	.00389
400.460	1000.300	-.04923	.06871	-.01135	.00061	.00024	-.00007	.42942	.00267	.00300	.00356
	GRADIENT	.00000	.00000	.00000	.00000	.00000	.00000	.00000	.00000	.00000	.00000

AEDC VA422(1A17) ORB AND ET SEPARATING(ORB DATA) (RTR128) (24 JUL 75)

REFERENCE DATA

SREF = 2690.0000 SQ.FT. XMRP = 1089.6000 IN. XO
LREF = 1290.3000 IN. YMRP = .0000 IN. YO
BREF = 1290.3000 IN. ZMRP = 375.0000 IN. ZO
SCALE = .0100

PARAMETRIC DATA

DLT-Y = .000 ALPHA = .000
BETA = .000 DLTALF = .000
DLTBTA = .000 MACH = 7.980
AILRON = .000 ELEVON = .000
GRID = 16.000 PO = 300.000

RUN NO. 868/ 0 GRADIENT INTERVAL = -5.00/ 5.00

DLT-X	DLT-Z	CN	CA	CLM	CY	CYN	CBL	XCP/L	CPB1	CPB2	CPBC
.453	18.942	-.01842	.07917	-.01177	.00035	.00009	.00028	.02102	-.00412	-.00423	-.00391
.487	99.799	-.00736	.08813	-.00027	.00093	.00050	.00020	.62318	-.00322	-.00337	-.00296
.588	201.130	.02804	.08563	-.00610	.00096	.00022	-.00024	.87757	-.00224	-.00243	-.00188
.557	301.660	.01944	.07516	-.01575	.00090	.00023	.00017	1.46990	-.00113	-.00140	-.00058
.450	400.340	-.03212	.07336	-.01460	.00058	.00024	-.00009	.20565	-.00031	-.00064	.00055
.557	497.530	-.04956	.07206	-.01141	.00034	.00025	-.00009	.42986	-.00023	-.00056	.00078
	GRADIENT	.00000	.00000	.00000	.00000	.00000	.00000	.00000	.00000	.00000	.00000

AEDC VA422(IA17) ORB AND ET SEPARATING(ORB DATA) (RTR128) (24 JUL 75)

REFERENCE DATA

SREF = 2690.0000 SQ.FT. XMRP = 1089.6000 IN. XO
LREF = 1290.3000 IN. YMRP = .0000 IN. YO
BREF = 1290.3000 IN. ZMRP = 375.0000 IN. ZO
SCALE = .0100

PARAMETRIC DATA

DLT-Y = .000 ALPHA = .000
BETA = .000 DLTALF = .000
DLTBTA = .000 MACH = 7.980
AILRON = .000 ELEVON = .000
GRID = 16.000 PO = 300.000

RUN NO. 869/ 0 GRADIENT INTERVAL = -5.00/ 5.00

DLT-X	DLT-Z	CN	CA	CLM	CY	CYN	CBL	XCP/L	CPB1	CPB2	CPBC
200.470	22.544	.00635	.08851	.00311	.00144	.00042	.00032	.17044	-.00819	-.00814	-.00830
200.520	99.419	.01060	.08460	.00102	.00084	.00032	-.00018	.56397	-.00872	-.00866	-.00884
200.510	199.620	.03707	.08314	-.01109	.00052	.00032	-.00016	.95905	-.00901	-.00894	-.00903
200.530	298.450	-.00458	.07413	-.01583	.00068	.00024	-.00004	.00000	-.00930	-.00922	-.00924
200.580	399.070	-.04348	.07388	-.01315	.00060	.00027	-.00009	.35759	-.00949	-.00938	-.00932
200.540	500.010	-.05060	.07170	-.01137	.00057	.00026	-.00009	.43537	-.00960	-.00950	-.00933
	GRADIENT	.00000	.00000	.00000	.00000	.00000	.00000	.00000	.00000	.00000	.00000

AEDC VA422(IA17) ORB AND ET SEPARATING(ORB DATA) (RTR129) (24 JUL 75)

REFERENCE DATA

SREF = 2690.0000 SQ.FT. XMRP = 1089.6000 IN. XO
LREF = 1290.3000 IN. YMRP = .0000 IN. YO
BREF = 1290.3000 IN. ZMRP = 375.0000 IN. ZO
SCALE = .0100

PARAMETRIC DATA

DLT-Y = .000 ALPHA = .000
BETA = .000 DLTALF = -5.000
DLTBTA = .000 MACH = 7.980
AILRON = .000 ELEVON = .000
GRID = 16.000 PO = 300.000

RUN NO. 872/ 0 GRADIENT INTERVAL = -5.00/ 5.00

DLT-X	DLT-Z	CN	CA	CLM	CY	CYN	CBL	XCP/L	CPB1	CPB2	CPBC
.654	203.240	.14048	.08628	-.00621	.00229	.00028	.00053	.70419	-.00420	-.00467	-.00313
.466	302.030	.05761	.08264	-.01269	.00070	.00031	-.00019	.88033	-.00388	-.00442	-.00259
.569	401.150	.00411	.07097	-.01707	.00051	.00026	-.00003	.00000	-.00385	-.00441	-.00253
.568	500.150	-.04182	.07301	-.01331	.00051	.00026	-.00008	.34166	-.00383	-.00442	-.00216
-.113	599.450	-.05028	.07109	-.01130	.00043	.00027	-.00009	.43524	-.00491	-.00535	-.00321
	GRADIENT	.00000	.00000	.00000	.00000	.00000	.00000	.00000	.00000	.00000	.00000

RUN NO. 873/ 0 GRADIENT INTERVAL = -5.00/ 5.00

DLT-X	DLT-Z	CN	CA	CLM	CY	CYN	CBL	XCP/L	CPB1	CPB2	CPBC
200.420	198.940	.14953	.07975	-.02332	.00111	.00023	.00026	.81598	-.00754	-.00771	-.00701
200.510	297.500	.05079	.07551	-.01739	.00098	.00022	.00003	1.00240	-.00790	-.00801	-.00728
200.450	398.050	-.01971	.07284	-.01610	.00060	.00024	-.00003	-.15651	-.00815	-.00820	-.00743
200.410	499.580	-.04836	.07330	-.01184	.00039	.00025	-.00009	.41523	-.00832	-.00834	-.00758
200.470	600.030	-.05032	.07110	-.01135	.00050	.00027	-.00009	.43443	-.00842	-.00844	-.00759
	GRADIENT	.00000	.00000	.00000	.00000	.00000	.00000	.00000	.00000	.00000	.00000

AEDC VA422(IA17) ORB AND ET SEPARATING(ORB DATA) (RTR130) (24 JUL 75)

REFERENCE DATA

SREF = 2690.0000 SQ.FT. XMRP = 1089.6000 IN. XO
LREF = 1290.3000 IN. YMRP = .0000 IN. YO
BREF = 1290.3000 IN. ZMRP = 375.0000 IN. ZO
SCALE = .0100

PARAMETRIC DATA

DLT-Y = .000 ALPHA = .000
BETA = .000 DLTALF = -10.000
DLTBTA = .000 MACH = 7.980
AILRON = .000 ELEVON = .000
GRID = 16.000 PO = 300.000

RUN NO. 874/ 0 GRADIENT INTERVAL = -5.00/ 5.00

DLT-X	DLT-Z	CN	CA	CLM	CY	CYN	CBL	XCP/L	CPB1	CPB2	CPBC
.550	403.110	.12181	.07330	-.03075	.00153	.00010	.00022	.91244	-.00089	-.00185	-.00013
.488	500.990	-.00595	.07145	-.01774	.00061	.00023	-.00008	-2.32050	.00003	-.00112	.00102
.557	600.080	-.04684	.07238	-.01216	.00052	.00026	-.00008	.40038	.00066	-.00065	.00200
.579	750.020	-.05077	.07032	-.01134	.00050	.00027	-.00008	.43666	-.00062	-.00178	.00107
-.280	801.740	-.05090	.07083	-.01132	.00051	.00027	-.00008	.43752	-.00156	-.00259	.00015
	GRADIENT	.00000	.00000	.00000	.00000	.00000	.00000	.00000	.00000	.00000	.00000

RUN NO. 875/ 0 GRADIENT INTERVAL = -5.00/ 5.00

DLT-X	DLT-Z	CN	CA	CLM	CY	CYN	CBL	XCP/L	CPB1	CPB2	CPBC
200.410	398.500	.04825	.07011	-.02390	.00069	.00024	.00003	1.15540	-.00483	-.00521	-.00437
200.440	498.340	-.02990	.07191	-.01595	.00060	.00025	-.00008	.12662	-.00494	-.00532	-.00430
200.440	599.880	-.04943	.07220	-.01127	.00050	.00023	-.00008	.43210	-.00505	-.00540	-.00442
200.450	750.120	-.04987	.07053	-.01132	.00043	.00027	-.00008	.43300	-.00423	-.00477	-.00306
200.450	800.130	-.05043	.07093	-.01131	.00043	.00025	-.00008	.43581	-.00305	-.00382	-.00172
	GRADIENT	.00000	.00000	.00000	.00000	.00000	.00000	.00000	.00000	.00000	.00000

RUN NO. 876/ 0 GRADIENT INTERVAL = -5.00/ 5.00

DLT-X	DLT-Z	CN	CA	CLM	CY	CYN	CBL	XCP/L	CPB1	CPB2	CPBC
400.450	401.090	-.00189	.06847	-.01895	.00057	.00024	-.00012	.00000	.00042	-.00064	.00153
400.330	500.060	-.04651	.07198	-.01218	.00042	.00027	-.00008	.39814	.00062	-.00053	.00199
400.410	600.110	-.05047	.07040	-.01129	.00036	.00027	-.00008	.43626	-.00031	-.00129	.00116
400.400	750.020	-.05082	.07098	-.01137	.00034	.00027	-.00008	.43622	-.00160	-.00235	-.00056
400.350	800.120	-.05066	.07313	-.01126	.00045	.00028	-.00008	.43765	-.00129	-.00213	-.00009
	GRADIENT	.00000	.00000	.00000	.00000	.00000	.00000	.00000	.00000	.00000	.00000

AEDC VA422(IA17) ORB AND ET SEPARATING(ORB DATA) (RTR131) (24 JUL 75)

REFERENCE DATA

SREF = 2890.0000 SQ.FT. XMRP = 1089.6000 IN. XO
LREF = 1290.3000 IN. YMRP = .0000 IN. YO
BREF = 1290.3000 IN. ZMRP = 375.0000 IN. ZO
SCALE = .0100

PARAMETRIC DATA

DLT-Y = .000 ALPHA = .000
BETA = 3.000 DLTALF = .000
DLTBTA = .000 MACH = 7.980
AILRON = .000 ELEVON = .000
GRID = 17.000 PO = 420.000

RUN NO. 747/ 0 GRADIENT INTERVAL = -5.00/ 5.00

DLT-X	DLT-Z	CN	CA	CLM	CY	CYN	CBL	XCP/L	CPB1	CPB2	CPBC
.534	18.217	-.02253	.07635	-.01302	-.03509	-.00255	-.00118	.08207	-.01338	-.01326	-.01317
.490	99.562	-.00594	.08744	-.00165	-.03919	-.00243	-.00088	.38281	-.01334	-.01321	-.01316
.507	201.490	.02410	.08358	-.00483	-.03370	-.00190	-.00179	.86037	-.01333	-.01322	-.01319
.583	302.370	.01768	.07547	-.01554	-.02878	-.00239	.00166	1.53900	-.01334	-.01321	-.01323
.600	400.530	-.03473	.07334	-.01457	-.03016	-.00225	.00061	.24050	-.01334	-.01320	-.01326
.659	500.080	-.05271	.07409	-.01129	-.03050	-.00219	.00022	.44583	-.01336	-.01320	-.01332
	GRADIENT	.00000	.00000	.00000	.00000	.00000	.00000	.00000	.00000	.00000	.00000

RUN NO. 749/ 0 GRADIENT INTERVAL = -5.00/ 5.00

DLT-X	DLT-Z	CN	CA	CLM	CY	CYN	CBL	XCP/L	CPB1	CPB2	CPBC
200.560	23.758	.00622	.08761	.00212	-.03761	-.00222	-.00110	.31969	-.01413	-.01397	-.01399
200.540	99.308	.01014	.08251	.00120	-.03762	-.00161	-.00138	.54147	-.01431	-.01414	-.01413
200.520	199.310	.03291	.08184	-.00983	-.03051	-.00234	-.00064	.95866	-.01426	-.01408	-.01394
200.480	297.730	-.00575	.07388	-.01628	-.02982	-.00219	.00105	-2.16620	-.01413	-.01395	-.01376
200.540	398.730	-.04664	.07351	-.01294	-.03051	-.00224	.00035	.38263	-.01407	-.01388	-.01367
200.540	499.920	-.05315	.07426	-.01117	-.03085	-.00218	.00021	.44991	-.01398	-.01381	-.01355
	GRADIENT	.00000	.00000	.00000	.00000	.00000	.00000	.00000	.00000	.00000	.00000

AEDC VA422(IA17) ORB AND ET SEPARATING(ORB DATA) (RTR132) (24 JUL 75)

REFERENCE DATA

SREF = 2690.0000 SQ. FT. XMRP = 1089.6000 IN. XO
LREF = 1290.3000 IN. YMRP = .0000 IN. YO
BREF = 1290.3000 IN. ZMRP = 375.0000 IN. ZO
SCALE = .0100

PARAMETRIC DATA

DLT-Y = .000 ALPHA = .000
BETA = 3.000 DLTALF = -5.000
DLTBTA = .000 MACH = 7.980
AILRON = .000 ELEVON = .000
GRID = 17.000 PO = 420.000

RUN NO. 751/ 0 GRADIENT INTERVAL = -5.00/ 5.00

DLT-X	DLT-Z	CN	CA	CLM	CY	CYN	CBL	XCP/L	CPB1	CPB2	CPBC
.605	204.390	.14752	.08385	-.00917	-.03504	-.00047	-.00036	.72216	-.01338	-.01334	-.01278
.575	303.020	.05545	.08139	-.01185	-.02975	-.00242	-.00023	.86999	-.01349	-.01345	-.01295
.510	401.620	.00346	.07295	-.01781	-.02941	-.00225	.00161	5.80410	-.01358	-.01354	-.01307
.524	500.230	-.04468	.07305	-.01315	-.03058	-.00223	.00039	.36573	-.01363	-.01357	-.01315
.103	598.990	-.05295	.07404	-.01113	-.03065	-.00216	.00021	.44973	-.01369	-.01361	-.01319
	GRADIENT	.00000	.00000	.00000	.00000	.00000	.00000	.00000	.00000	.00000	.00000

RUN NO. 752/ 0 GRADIENT INTERVAL = -5.00/ 5.00

DLT-X	DLT-Z	CN	CA	CLM	CY	CYN	CBL	XCP/L	CPB1	CPB2	CPBC
200.550	198.570	.15074	.07705	-.02407	-.03260	-.00177	-.00086	.81958	-.01360	-.01344	-.01294
200.510	296.480	.04996	.07684	-.01692	-.02701	-.00267	.00189	.99878	-.01346	-.01329	-.01266
200.530	397.110	-.02101	.07272	-.01617	-.03014	-.00224	.00089	-.10975	-.01314	-.01299	-.01231
200.580	499.420	-.05144	.07346	-.01153	-.03087	-.00221	.00023	.43579	-.01302	-.01289	-.01222
200.410	600.060	-.05292	.07414	-.01114	-.03078	-.00215	.00021	.44954	-.01296	-.01287	-.01220
	GRADIENT	.00000	.00000	.00000	.00000	.00000	.00000	.00000	.00000	.00000	.00000

AEDC VA422(IA17) ORB AND ET SEPARATING(ORB DATA) (RTR133) (24 JUL 75)

REFERENCE DATA

SREF = 2690.0000 SQ.FT. XMRP = 1089.6000 IN. XO
LREF = 1290.3000 IN. YMRP = .0000 IN. YO
BREF = 1290.3000 IN. ZMRP = 375.0000 IN. ZO
SCALE = .0100

PARAMETRIC DATA

DLT-Y = .000 ALPHA = .000
BETA = 3.000 DLTALF = -10.000
DLTBTA = .000 MACH = 7.980
AILRON = .000 ELEVON = .000
GRID = 17.000 PO = 420.000

RUN NO. 753/ 0 GRADIENT INTERVAL = -5.00/ 5.00

DLT-X	DLT-Z	CN	CA	CLM	CY	CYN	CBL	XCP/L	CPB1	CPB2	CPBC
.563	404.280	.12183	.07445	-.03094	-.02585	-.00292	.00271	.91395	-.01351	-.01349	-.01295
.533	501.200	-.00732	.07165	-.01808	-.02966	-.00225	.00111	-1.80890	-.01367	-.01363	-.01319
.626	600.170	-.04977	.07300	-.01197	-.03077	-.00222	.00026	.41948	-.01374	-.01369	-.01332
.625	750.080	-.05341	.07432	-.01115	-.03070	-.00215	.00021	.45132	-.01366	-.01362	-.01324
.032	802.090	-.05347	.07438	-.01119	-.03067	-.00215	.00021	.45066	-.01359	-.01354	-.01314
	GRADIENT	.00000	.00000	.00000	.00000	.00000	.00000	.00000	.00000	.00000	.00000

AEDC VA422(IA17) ORB AND ET SEPARATING(ORB DATA) (RTR133) (24 JUL 75)

REFERENCE DATA

SREF = 2690.0000 SQ.FT. XMRP = 1089.6000 IN. XO
LREF = 1290.3000 IN. YMRP = .0000 IN. YO
BREF = 1290.3000 IN. ZMRP = 375.0000 IN. ZO
SCALE = .0100

PARAMETRIC DATA

DLT-Y = .000 ALPHA = .000
BETA = 3.000 DLTALF = -10.000
DLTBTA = .000 MACH = 7.980
AILRON = .000 ELEVON = .000
GRID = 17.000 PO = 420.000

RUN NO. 754/ 0 GRADIENT INTERVAL = -5.00/ 5.00

DLT-X	DLT-Z	CN	CA	CLM	CY	CYN	CBL	XCP/L	CPB1	CPB2	CPBC
200.480	397.830	.04658	.07085	-.02403	-.02849	-.00230	.00228	1.17590	-.01230	-.01245	-.01148
200.500	497.690	-.03099	.07173	-.01607	-.03034	-.00230	.00056	.14144	-.01164	-.01185	-.01056
200.590	599.900	-.05177	.07338	-.01106	-.03095	-.00218	.00020	.44643	-.01120	-.01143	-.01022
200.480	750.040	-.05255	.07396	-.01111	-.03080	-.00215	.00021	.44868	-.01124	-.01143	-.01051
200.460	800.130	-.05293	.07404	-.01111	-.03078	-.00215	.00021	.45007	-.01146	-.01162	-.01082
	GRADIENT	.00000	.00000	.00000	.00000	.00000	.00000	.00000	.00000	.00000	.00000

RUN NO. 755/ 0 GRADIENT INTERVAL = -5.00/ 5.00

DLT-X	DLT-Z	CN	CA	CLM	CY	CYN	CBL	XCP/L	CPB1	CPB2	CPBC
400.400	401.660	-.00144	.07068	-.01955	-.02963	-.00225	.00101	.00000	-.01264	-.01273	-.01220
400.340	500.010	-.04950	.07262	-.01198	-.03055	-.00221	.00026	.41782	-.01262	-.01271	-.01226
400.310	600.120	-.05322	.07390	-.01112	-.03079	-.00215	.00021	.45096	-.01249	-.01258	-.01210
400.370	750.020	-.05369	.07437	-.01114	-.03078	-.00215	.00021	.45260	-.01219	-.01230	-.01178
400.380	800.110	-.05336	.07419	-.01116	-.03068	-.00215	.00021	.45093	-.01201	-.01213	-.01153
	GRADIENT	.00000	.00000	.00000	.00000	.00000	.00000	.00000	.00000	.00000	.00000

AEDC VA422(IA17) ORB AND ET SEPARATING(ORB DATA) (RTR134) (24 JUL 75)

REFERENCE DATA

SREF = 2690.0000 SQ.FT. XMRP = 1089.6000 IN. XO
LREF = 1290.3000 IN. YMRP = .0000 IN. YO
BREF = 1290.3000 IN. ZMRP = 375.0000 IN. ZO
SCALE = .0100

PARAMETRIC DATA

DLT-Y = .000 ALPHA = .000
BETA = 3.000 DLTALF = -15.000
DLTBTA = .000 MACH = 7.980
AILRON = .000 ELEVON = .000
GRID = 17.000 PO = 420.000

RUN NO. 759/ 0 GRADIENT INTERVAL = -5.00/ 5.00

DLT-X	DLT-Z	CN	CA	CLM	CY	CYN	CBL	XCP/L	CPB1	CPB2	CPBC
.460	500.600	.24419	.07479	-.04832	-.02756	-.00215	.00376	.85788	-.01083	-.01110	-.01003
.564	601.560	.03548	.06678	-.03202	-.02846	-.00247	.00150	1.56240	-.01159	-.01184	-.01078
.621	750.380	-.05129	.07240	-.01102	-.03076	-.00218	.00019	.44519	-.01241	-.01255	-.01191
.449	800.260	-.05183	.07281	-.01103	-.03069	-.00216	.00020	.44718	-.01258	-.01269	-.01216
	GRADIENT	.00000	.00000	.00000	.00000	.00000	.00000	.00000	.00000	.00000	.00000

AEDC VA422(IA17) ORB AND ET SEPARATING(ORB DATA) (RTR134) (24 JUL 75)

REFERENCE DATA

SREF = 2690.0000 SQ.FT. XMRP = 1089.6000 IN. XO
LREF = 1290.3000 IN. YMRP = .0000 IN. YO
BREF = 1290.3000 IN. ZMRP = 375.0000 IN. ZO
SCALE = .0100

PARAMETRIC DATA

DLT-Y = .000 ALPHA = .000
BETA = 3.000 DLTALF = -15.000
DLTBTA = .000 MACH = 7.980
AILRON = .000 ELEVON = .000
GRID = 17.000 PO = 420.000

RUN NO. 760/ 0 GRADIENT INTERVAL = -5.00/ 5.00

DLT-X	DLT-Z	CN	CA	CLM	CY	CYN	CBL	XCP/L	CPB1	CPB2	CPBC
200.420	500.270	.15224	.06354	-.05654	-.02740	-.00233	.00273	1.03140	-.01107	-.01129	-.01039
200.480	596.880	-.03350	.06947	-.01644	-.02983	-.00237	.00067	.16940	-.01074	-.01098	-.00986
200.590	750.300	-.05162	.07293	-.01104	-.03083	-.00216	.00019	.44612	-.00928	-.00958	-.00818
200.490	800.300	-.05138	.07356	-.01106	-.03063	-.00214	.00020	.44483	-.00918	-.00947	-.00824
	GRADIENT	.00000	.00000	.00000	.00000	.00000	.00000	.00000	.00000	.00000	.00000

RUN NO. 761/ 0 GRADIENT INTERVAL = -5.00/ 5.00

DLT-X	DLT-Z	CN	CA	CLM	CY	CYN	CBL	XCP/L	CPB1	CPB2	CPBC
400.330	501.230	-.00895	.06638	-.01911	-.02903	-.00240	.00099	-1.47570	-.01015	-.01036	-.00913
400.350	600.130	-.05017	.07136	-.01126	-.03061	-.00220	.00022	.43554	-.01072	-.01091	-.01026
400.400	750.410	-.05203	.07379	-.01107	-.03071	-.00214	.00020	.44716	-.01028	-.01048	-.00982
400.430	800.240	-.05205	.07377	-.01111	-.03075	-.00215	.00020	.44662	-.00991	-.01014	-.00936
	GRADIENT	.00000	.00000	.00000	.00000	.00000	.00000	.00000	.00000	.00000	.00000

AEDC VA422(IA17) ORB AND ET SEPARATING(ORB DATA) (RTR136) (24 JUL 75)

REFERENCE DATA

SREF = 2690.0000 SQ.FT. XMRP = 1089.6000 IN. XO
LREF = 1290.3000 IN. YMRP = .0000 IN. YO
BREF = 1290.3000 IN. ZMRP = 375.0000 IN. ZO
SCALE = .0100

PARAMETRIC DATA

DLT-Y = .000 ALPHA = .000
BETA = 3.000 DLTALF = -20.000
DLTBTA = .000 MACH = 7.980
AILRON = .000 ELEVON = .000
GRID = 17.000 PO = 420.000

RUN NO. 766/ 0 GRADIENT INTERVAL = -5.00/ 5.00

DLT-X	DLT-Z	CN	CA	CLM	CY	CYN	CBL	XCP/L	CPB1	CPB2	CPBC
.550	802.090	.04817	.06583	-.03243	-.02684	-.00237	.00169	1.33320	-.00633	-.00676	-.00615
.557	900.320	-.04298	.07010	-.01355	-.03041	-.00225	.00037	.34455	-.00655	-.00690	-.00658
.430	1000.300	-.05078	.07244	-.01102	-.03067	-.00218	.00019	.44300	-.00624	-.00659	-.00633
	GRADIENT	.00000	.00000	.00000	.00000	.00000	.00000	.00000	.00000	.00000	.00000

AEDC VA422(IA17) ORB AND ET SEPARATING(ORB DATA) (RTR136) (24 JUL 75)

REFERENCE DATA

SREF = 2690.0000 SQ.FT. XMRP = 1089.6000 IN. XO
LREF = 1290.3000 IN. YMRP = .0000 IN. YO
BREF = 1290.3000 IN. ZMRP = 375.0000 IN. ZO
SCALE = .0100

PARAMETRIC DATA

DLT-Y = .000 ALPHA = .000
BETA = 3.000 DLTALF = -20.000
DLTBTA = .000 MACH = 7.980
AILRON = .000 ELEVON = .000
GRID = 17.000 PO = 420.000

RUN NO. 762/ 0 GRADIENT INTERVAL = -5.00/ 5.00

DLT-X	DLT-Z	CN	CA	CLM	CY	CYN	CBL	XCP/L	CPB1	CPB2	CPBC
200.370	751.220	.02657	.06330	-.03086	-.02790	-.00241	.00114	1.82140	-.00327	-.00380	-.00219
200.430	800.390	-.03468	.06808	-.01566	-.03014	-.00227	.00058	.20852	-.00376	-.00418	-.00286
200.510	900.400	-.05092	.07154	-.01097	-.03061	-.00220	.00019	.44452	-.00338	-.00378	-.00253
200.490	1000.300	-.05086	.07310	-.01104	-.03076	-.00216	.00019	.44293	-.00220	-.00268	-.00106
	GRADIENT	.00000	.00000	.00000	.00000	.00000	.00000	.00000	.00000	.00000	.00000

RUN NO. 763/ 0 GRADIENT INTERVAL = -5.00/ 5.00

DLT-X	DLT-Z	CN	CA	CLM	CY	CYN	CBL	XCP/L	CPB1	CPB2	CPBC
400.370	749.250	-.05033	.06911	-.01111	-.03018	-.00228	.00020	.43930	-.00077	-.00165	.00079
400.410	800.390	-.05033	.07041	-.01098	-.03053	-.00221	.00019	.44193	.00024	-.00054	.00175
400.420	900.350	-.05032	.07200	-.01097	-.03064	-.00218	.00018	.44208	.00012	-.00052	.00120
400.370	1000.200	-.05075	.07334	-.01104	-.03069	-.00216	.00018	.44252	-.00097	-.00150	-.00035
	GRADIENT	.00000	.00000	.00000	.00000	.00000	.00000	.00000	.00000	.00000	.00000

AEDC VA422(IA17) ORB AND ET SEPARATING(ORB DATA) (RTR137) (24 JUL 75)

REFERENCE DATA

SREF = 2690.0000 SQ.FT. XMRP = 1089.6000 IN. XO
LREF = 1290.3000 IN. YMRP = .0000 IN. YO
BREF = 1290.3000 IN. ZMRP = 375.0000 IN. ZO
SCALE = .0100

PARAMETRIC DATA

DLT-Y = .000 ALPHA = 5.000
BETA = 3.000 DLTALF = .000
DLTBTA = .000 MACH = 7.980
AILRON = .000 ELEVON = .000
GRID = 25.000 PO = 420.000

RUN NO. 807/ 0 GRADIENT INTERVAL = -5.00/ 5.00

DLT-X	DLT-Z	CN	CA	CLM	CY	CYN	CBL	XCP/L	CPB1	CPB2	CPBC
.558	18.380	.02301	.05699	-.01299	-.02714	-.00166	-.00220	1.22480	-.01200	-.01184	-.01212
.661	97.592	.03569	.07306	-.00264	-.03090	-.00348	-.00235	.73390	-.01167	-.01149	-.01179
.674	199.170	.07177	.07091	.00764	-.03494	-.00206	-.00348	.55361	-.01137	-.01120	-.01154
.626	301.710	.12561	.07510	-.00528	-.03015	-.00201	-.00321	.70201	-.01099	-.01083	-.01120
.317	402.280	.11729	.06427	-.01657	-.02554	-.00255	.00064	.80129	-.01067	-.01053	-.01094
.743	498.100	.05260	.06240	-.01166	-.02619	-.00258	-.00034	.88167	-.01033	-.01018	-.01067
	GRADIENT	.00000	.00000	.00000	.00000	.00000	.00000	.00000	.00000	.00000	.00000

AEDC VA422(IA17) ORB AND ET SEPARATING(ORB DATA) (RTR137) (24 JUL 75)

REFERENCE DATA

SREF = 2690.0000 SQ.FT. XMRP = 1089.6000 IN. XO
LREF = 1290.3000 IN. YMRP = .0000 IN. YO
BREF = 1290.3000 IN. ZMRP = 375.0000 IN. ZO
SCALE = .0100

PARAMETRIC DATA

DLT-Y = .000 ALPHA = 5.000
BETA = 3.000 DLTALF = .000
DLTBTA = .000 MACH = 7.980
AILRON = .000 ELEVON = .000
GRID = 25.000 PO = 420.000

RUN NO. 808/ 0 GRADIENT INTERVAL = -5.00/ 5.00

DLT-X	DLT-Z	CN	CA	CLM	CY	CYN	CBL	XCP/L	CPB1	CPB2	CPBC
200.630	23.331	.04552	.07145	.00061	-.03000	-.00314	-.00215	.64658	-.01229	-.01227	-.01232
200.580	100.900	.06055	.06918	.00801	-.03422	-.00296	-.00286	.52770	-.01248	-.01250	-.01255
200.550	200.720	.10498	.07331	.00152	-.03213	-.00175	-.00341	.64455	-.01269	-.01271	-.01272
200.530	299.840	.14234	.06910	-.01389	-.02429	-.00299	-.00103	.75762	-.01272	-.01276	-.01265
200.550	396.910	.07578	.06269	-.01450	-.02588	-.00250	-.00014	.85129	-.01270	-.01275	-.01254
200.640	498.910	.03486	.06339	-.00865	-.02635	-.00260	-.00070	.90814	-.01272	-.01275	-.01251
	GRADIENT	.00000	.00000	.00000	.00000	.00000	.00000	.00000	.00000	.00000	.00000

AEDC VA422(IA17) ORB AND ET SEPARATING(ORB DATA) (RTR138) (24 JUL 75)

REFERENCE DATA

SREF = 2690.0000 SQ.FT. XMRP = 1089.6000 IN. XO
LREF = 1290.3000 IN. YMRP = .0000 IN. YO
BREF = 1290.3000 IN. ZMRP = 375.0000 IN. ZO
SCALE = .0100

PARAMETRIC DATA

DLT-Y = .000 ALPHA = 5.000
BETA = 3.000 DLTALF = -5.000
DLTBTA = .000 MACH = 7.980
AILRON = .000 ELEVON = .000
GRID = 25.000 PO = 420.000

RUN NO. 811/ 0 GRADIENT INTERVAL = -5.00/ 5.00

DLT-X	DLT-Z	CN	CA	CLM	CY	CYN	CBL	XCP/L	CPB1	CPB2	CPBC
.595	201.410	.15144	.07097	.00175	-.03362	-.00171	-.00266	.64843	-.01352	-.01353	-.01283
.595	300.450	.12206	.07460	.00256	-.03323	-.00150	-.00417	.63901	-.01341	-.01343	-.01270
.590	403.200	.15578	.07153	-.01412	-.02328	-.00341	-.00115	.75060	-.01338	-.01343	-.01266
.601	501.390	.09005	.06255	-.01636	-.02549	-.00255	.00085	.84169	-.01345	-.01351	-.01274
-.189	600.460	.03843	.06302	-.00951	-.02605	-.00263	-.00061	.90758	-.01352	-.01358	-.01284
	GRADIENT	.00000	.00000	.00000	.00000	.00000	.00000	.00000	.00000	.00000	.00000

RUN NO. 812/ 0 GRADIENT INTERVAL = -5.00/ 5.00

DLT-X	DLT-Z	CN	CA	CLM	CY	CYN	CBL	XCP/L	CPB1	CPB2	CPBC
200.580	200.150	.18754	.06687	-.01114	-.03444	-.00171	-.00291	.71940	-.01387	-.01389	-.01332
200.480	298.890	.15217	.07610	-.00693	-.02885	-.00233	-.00315	.70555	-.01387	-.01394	-.01329
200.480	397.540	.12277	.06404	-.01834	-.02530	-.00252	.00115	.80942	-.01385	-.01394	-.01327
200.540	497.680	.05418	.06242	-.01237	-.02595	-.00258	-.00027	.88829	-.01386	-.01393	-.01327
200.510	599.600	.03111	.06397	-.00742	-.02658	-.00253	-.00071	.89869	-.01383	-.01387	-.01316
	GRADIENT	.00000	.00000	.00000	.00000	.00000	.00000	.00000	.00000	.00000	.00000

ORIGINAL PAGE IS OF POOR QUALITY

AEDC VA422(IA17) ORB AND ET SEPARATING(ORB DATA) (RTR139) (24 JUL 75)

REFERENCE DATA

SREF = 2690.0000 SQ.FT. XMRP = 1089.6000 IN. XO
LREF = 1290.3000 IN. YMRP = .0000 IN. YO
BREF = 1290.3000 IN. ZMRP = 375.0000 IN. ZO
SCALE = .0100

PARAMETRIC DATA

DLT-Y = .000 ALPHA = 5.000
BETA = 3.000 DLTALF = -10.000
DLTBTA = .000 MACH = 7.980
AILRON = .000 ELEVON = .000
GRID = 25.000 PO = 420.000

RUN NO. 813/ 0 GRADIENT INTERVAL = -5.00/ 5.00

DLT-X	DLT-Z	CN	CA	CLM	CY	CYN	CBL	XCP/L	CPB1	CPB2	CPBC
.543	402.570	.18571	.07570	-.00766	-.03015	-.00176	-.00405	.70123	-.01317	-.01323	-.01234
.585	503.340	.16742	.06544	-.02196	-.02360	-.00286	.00244	.79119	-.01321	-.01329	-.01236
-.517	604.140	.07055	.08148	-.01465	-.02558	-.00258	.00029	.86766	-.01331	-.01338	-.01248
	GRADIENT	.00000	.00000	.00000	.00000	.00000	.00000	.00000	.00000	.00000	.00000

RUN NO. 814/ 0 GRADIENT INTERVAL = -5.00/ 5.00

DLT-X	DLT-Z	CN	CA	CLM	CY	CYN	CBL	XCP/L	CPB1	CPB2	CPBC
200.610	399.290	.19342	.07083	-.01813	-.02180	-.00344	-.00019	.75375	-.01313	-.01316	-.01227
200.560	496.180	.10724	.06196	-.01956	-.02522	-.00255	.00132	.84241	-.01303	-.01308	-.01217
200.570	598.300	.04151	.06238	-.01031	-.02583	-.00265	-.00055	.90850	-.01296	-.01302	-.01212
	GRADIENT	.00000	.00000	.00000	.00000	.00000	.00000	.00000	.00000	.00000	.00000

RUN NO. 815/ 0 GRADIENT INTERVAL = -5.00/ 5.00

DLT-X	DLT-Z	CN	CA	CLM	CY	CYN	CBL	XCP/L	CPB1	CPB2	CPBC
400.430	402.330	.14030	.06271	-.02240	-.02512	-.00248	.00134	.81968	-.01258	-.01268	-.01168
400.490	500.580	.05883	.06160	-.01323	-.02587	-.00260	-.00022	.88481	-.01264	-.01272	-.01174
400.490	599.910	.03174	.06362	-.00740	-.02647	-.00253	-.00032	.89307	-.01274	-.01282	-.01182
	GRADIENT	.00000	.00000	.00000	.00000	.00000	.00000	.00000	.00000	.00000	.00000

AEDC VA422(IA17) ORB AND ET SEPARATING(ORB DATA) (RTR140) (24 JUL 75)

REFERENCE DATA

SREF = 2690.0000 SQ.FT. XMRP = 1089.6000 IN. XO
LREF = 1290.3000 IN. YMRP = .0000 IN. YO
BREF = 1290.3000 IN. ZMRP = 375.0000 IN. ZO
SCALE = .0100

PARAMETRIC DATA

DLT-Y = .000 ALPHA = 5.000
BETA = 3.000 DLTALF = -15.000
DLTBTA = .000 MACH = 7.980
AILRON = .000 ELEVON = .000
GRID = 25.000 PO = 420.000

RUN NO. 818/ 0 GRADIENT INTERVAL = -5.00/ 5.00

DLT-X	DLT-Z	CN	CA	CLM	CY	CYN	CBL	XCP/L	CPB1	CPB2	CPBC
.627	401.800	.18132	.07253	-.00784	-.02357	-.00242	-.00341	.70322	-.01209	-.01228	-.01128
.621	497.370	.15468	.06932	-.02085	-.01762	-.00429	.00535	.79482	-.01212	-.01231	-.01132
.601	597.250	.07348	.06158	-.01536	-.02482	-.00276	.00183	.86908	-.01226	-.01241	-.01149
	GRADIENT	.00000	.00000	.00000	.00000	.00000	.00000	.00000	.00000	.00000	.00000

RUN NO. 820/ 0 GRADIENT INTERVAL = -5.00/ 5.00

DLT-X	DLT-Z	CN	CA	CLM	CY	CYN	CBL	XCP/L	CPB1	CPB2	CPBC
200.440	500.390	.27472	.06144	-.04652	-.02218	-.00303	.00381	.82934	-.01184	-.01203	-.01113
200.590	595.830	.09576	.06053	-.01925	-.02515	-.00244	.00069	.86098	-.01168	-.01191	-.01091
200.530	748.850	.03224	.06352	-.00737	-.02643	-.00253	-.00071	.88859	-.01137	-.01166	-.01055
200.510	800.010	.03124	.06103	-.00711	-.02599	-.00257	-.00088	.88775	-.01128	-.01159	-.01048
	GRADIENT	.00000	.00000	.00000	.00000	.00000	.00000	.00000	.00000	.00000	.00000

RUN NO. 821/ 0 GRADIENT INTERVAL = -5.00/ 5.00

DLT-X	DLT-Z	CN	CA	CLM	CY	CYN	CBL	XCP/L	CPB1	CPB2	CPBC
400.280	501.990	.12339	.05823	-.02328	-.02463	-.00248	.00108	.84862	-.00567	-.00633	-.00471
400.540	600.430	.04541	.06069	-.01121	-.02552	-.00269	-.00055	.90678	-.00539	-.00614	-.00431
400.530	750.070	.03073	.06071	-.00705	-.02587	-.00271	-.00068	.88956	-.00653	-.00734	-.00490
400.600	800.070	.03065	.06075	-.00709	-.02580	-.00270	-.00068	.89147	-.00808	-.00880	-.00653
	GRADIENT	.00000	.00000	.00000	.00000	.00000	.00000	.00000	.00000	.00000	.00000

ORIGINAL PAGE IS OF POOR QUALITY

AEDC VA422(IA17) ORB AND ET SEPARATING(ORB DATA) (RTR142) (24 JUL 75)

REFERENCE DATA

SREF = 2690.0000 SQ.FT. XMRP = 1089.6000 IN. XO
LREF = 1290.3000 IN. YMRP = .0000 IN. YO
BREF = 1290.3000 IN. ZMRP = 375.0000 IN. ZO
SCALE = .0100

PARAMETRIC DATA

DLT-Y = .000 ALPHA = 5.000
BETA = 3.000 DLTALF = -20.000
DLTBTA = .000 MACH = 7.980
AILRON = .000 ELEVON = .000
GRID = 25.000 PO = 420.000

RUN NO. 826/ 0 GRADIENT INTERVAL = -5.00/ 5.00

DLT-X	DLT-Z	CN	CA	CLM	CY	CYN	CBL	XCP/L	CPB1	CPB2	CPBC
.541	801.290	.10732	.05669	-.02631	-.02436	-.00275	.00037	.90513	.00036	-.00043	.00041
.492	900.260	.03272	.06085	-.00713	-.02597	-.00269	-.00074	.87798	.00085	-.00000	.00110
.513	1000.200	.03234	.06046	-.00700	-.02589	-.00270	-.00069	.87647	.00100	.00016	.00135
	GRADIENT	.00000	.00000	.00000	.00000	.00000	.00000	.00000	.00000	.00000	.00000

RUN NO. 822/ 0 GRADIENT INTERVAL = -5.00/ 5.00

DLT-X	DLT-Z	CN	CA	CLM	CY	CYN	CBL	XCP/L	CPB1	CPB2	CPBC
200.490	750.400	.05373	.05914	-.01356	-.02513	-.00273	-.00027	.91236	-.00168	-.00258	-.00100
200.460	800.240	.03276	.06058	-.00727	-.02563	-.00273	-.00074	.88182	-.00177	-.00272	-.00095
200.470	900.190	.03232	.06097	-.00709	-.02615	-.00266	-.00070	.87930	-.00212	-.00301	-.00109
200.500	1000.200	.03173	.06040	-.00700	-.02579	-.00270	-.00068	.88058	-.00295	-.00381	-.00183
	GRADIENT	.00000	.00000	.00000	.00000	.00000	.00000	.00000	.00000	.00000	.00000

RUN NO. 823/ 0 GRADIENT INTERVAL = -5.00/ 5.00

DLT-X	DLT-Z	CN	CA	CLM	CY	CYN	CBL	XCP/L	CPB1	CPB2	CPBC
400.560	750.020	.03305	.06154	-.00713	-.02619	-.00260	-.00073	.87585	-.00230	-.00312	-.00185
400.550	800.230	.03280	.06072	-.00705	-.02596	-.00268	-.00070	.87496	-.00248	-.00329	-.00212
400.600	900.190	.03240	.06038	-.00699	-.02593	-.00271	-.00069	.87588	-.00219	-.00313	-.00176
400.640	1000.300	.03147	.06024	-.00699	-.02562	-.00274	-.00069	.88216	-.00156	-.00259	-.00103
	GRADIENT	.00000	.00000	.00000	.00000	.00000	.00000	.00000	.00000	.00000	.00000

AEDC VA422(IA17) ORB AND ET SEPARATING(ORB DATA) (RTR143) (24 JUL 75)

REFERENCE DATA

SREF = 2690.0000 SQ.FT. XMRP = 1089.6000 IN. XO
LREF = 1290.3000 IN. YMRP = .0000 IN. YO
BREF = 1290.3000 IN. ZMRP = 375.0000 IN. ZO
SCALE = .0100

PARAMETRIC DATA

DLT-Y = .000 ALPHA = -5.000
BETA = 3.000 DLTALF = .000
DLTBTA = .000 MACH = 7.980
AILRON = .000 ELEVON = .000
GRID = 16.000 PO = 420.000

RUN NO. 838/ 0 GRADIENT INTERVAL = -5.00/ 5.00

DLT-X	DLT-Z	CN	CA	CLM	CY	CYN	CBL	XCP/L	CPB1	CPB2	CPBC
.588	18.871	-.06671	.10268	-.00986	-.04417	-.00153	.00046	.51223	-.01275	-.01291	-.01191
.498	102.280	-.04062	.09645	-.00586	-.04024	-.00200	.00022	.51569	-.01313	-.01339	-.01226
.668	202.400	-.06035	.09115	-.01373	-.03253	-.00239	.00140	.43254	-.01358	-.01387	-.01294
.459	300.820	-.10415	.08705	-.01754	-.03479	-.00190	.00132	.49157	-.01386	-.01411	-.01329
.625	400.150	-.12819	.08700	-.01531	-.03544	-.00189	.00100	.54061	-.01391	-.01416	-.01339
.616	500.200	-.13008	.08753	-.01475	-.03573	-.00187	.00092	.54664	-.01392	-.01415	-.01340
	GRADIENT	.00000	.00000	.00000	.00000	.00000	.00000	.00000	.00000	.00000	.00000

RUN NO. 839/ 0 GRADIENT INTERVAL = -5.00/ 5.00

DLT-X	DLT-Z	CN	CA	CLM	CY	CYN	CBL	XCP/L	CPB1	CPB2	CPBC
200.560	23.932	-.02714	.10511	.00176	-.04272	-.00222	.00030	.72472	-.01405	-.01354	-.01330
200.490	97.148	-.05070	.09335	-.00503	-.03745	-.00152	-.00001	.56070	-.01380	-.01330	-.01273
200.460	197.760	-.07061	.08817	-.01541	-.03342	-.00201	.00172	.44180	-.01332	-.01291	-.01214
200.470	297.960	-.11214	.08645	-.01760	-.03524	-.00195	.00125	.50309	-.01299	-.01262	-.01186
200.430	399.840	-.12968	.08672	-.01470	-.03552	-.00190	.00093	.54668	-.01286	-.01254	-.01180
200.520	500.150	-.13002	.08707	-.01463	-.03554	-.00189	.00092	.54746	-.01278	-.01252	-.01179
	GRADIENT	.00000	.00000	.00000	.00000	.00000	.00000	.00000	.00000	.00000	.00000

AEDC VA422(IA17) ORB AND ET SEPARATING(ORB DATA) (RTR144) (24 JUL 75)

REFERENCE DATA

SREF = 2690.0000 SQ.FT. XMRP = 1089.6000 IN. XO
LREF = 1290.3000 IN. YMRP = .0000 IN. YO
BREF = 1290.3000 IN. ZMRP = 375.0000 IN. ZO
SCALE = .0100

PARAMETRIC DATA

DLT-Y = .000 ALPHA = -5.000
BETA = 3.000 DLTALF = -5.000
DLTBTA = .000 MACH = 7.980
AILRON = .000 ELEVON = .000
GRID = 18.000 PO = 420.000

RUN NO. 842/ 0 GRADIENT INTERVAL = -5.00/ 5.00

DLT-X	DLT-Z	CN	CA	CLM	CY	CYN	CBL	XCP/L	CPB1	CPB2	CPBC
.606	200.090	.11566	.09392	-.01972	-.03262	-.00118	.00133	.83052	-.01235	-.01252	-.01145
.517	302.350	-.05418	.08551	-.02071	-.03302	-.00211	.00216	.27771	-.01294	-.01305	-.01222
.453	400.460	-.11267	.08570	-.01810	-.03482	-.00196	.00117	.49933	-.01306	-.01313	-.01239
.549	500.220	-.13015	.08661	-.01458	-.03530	-.00189	.00091	.54797	-.01305	-.01308	-.01240
.203	598.200	-.13027	.08708	-.01464	-.03559	-.00188	.00091	.54761	-.01298	-.01300	-.01231
	GRADIENT	.00000	.00000	.00000	.00000	.00000	.00000	.00000	.00000	.00000	.00000

RUN NO. 843/ 0 GRADIENT INTERVAL = -5.00/ 5.00

DLT-X	DLT-Z	CN	CA	CLM	CY	CYN	CBL	XCP/L	CPB1	CPB2	CPBC
200.540	196.120	.02765	.09027	-.02518	-.03347	-.00221	.00080	1.57080	-.01167	-.01154	-.01061
200.480	296.240	-.07387	.08610	-.01925	-.03394	-.00201	.00176	.39945	-.01137	-.01121	-.01010
200.470	398.250	-.12079	.08572	-.01661	-.03540	-.00198	.00104	.52251	-.01097	-.01085	-.00967
200.550	500.160	-.12882	.08646	-.01459	-.03534	-.00191	.00091	.54673	-.01080	-.01070	-.00961
200.480	600.130	-.12900	.08693	-.01462	-.03541	-.00191	.00091	.54665	-.01087	-.01080	-.00983
	GRADIENT	.00000	.00000	.00000	.00000	.00000	.00000	.00000	.00000	.00000	.00000

AEDC VA422(IA17) ORB AND ET SEPARATING(ORB DATA) (RTR145) (24 JUL 75)

REFERENCE DATA

SREF = 2690.0000 SQ.FT. XMRP = 1089.6000 IN. XO
LREF = 1290.3000 IN. YMRP = .0000 IN. YO
BREF = 1290.3000 IN. ZMRP = 375.0000 IN. ZO
SCALE = .0100

PARAMETRIC DATA

DLT-Y = .000 ALPHA = -5.000
BETA = 3.000 DLTALF = -10.000
DLTBTA = .000 MACH = 7.980
AILRON = .000 ELEVON = .000
GRID = 18.000 PO = 420.000

RUN NO. 844/ 0 GRADIENT INTERVAL = -5.00/ 5.00

DLT-X	DLT-Z	CN	CA	CLM	CY	CYN	CBL	XCP/L	CPB1	CPB2	CPBC
.490	404.050	.03841	.08287	-.04249	-.03281	-.00218	.00229	1.76610	-.01091	-.01107	-.00969
.478	500.510	-.10239	.08205	-.02179	-.03463	-.00208	.00130	.44717	-.01171	-.01182	-.01086
.487	601.450	-.12874	.08547	-.01461	-.03520	-.00191	.00090	.54649	-.01198	-.01205	-.01132
	GRADIENT	.00000	.00000	.00000	.00000	.00000	.00000	.00000	.00000	.00000	.00000

AEDC VA422(IA17) ORB AND ET SEPARATING(ORB DATA) (RTR145) (24 JUL 75)

REFERENCE DATA

SREF = 2690.0000 SQ.FT. XMRP = 1089.6000 IN. XO
LREF = 1290.3000 IN. YMRP = .0000 IN. YO
BREF = 1290.3000 IN. ZMRP = 375.0000 IN. ZO
SCALE = .0100

PARAMETRIC DATA

DLT-Y = .000 ALPHA = -5.000
BETA = 3.000 DLTALF = -10.000
DLTBTA = .000 MACH = 7.980
AILRON = .000 ELEVON = .000
GRID = 18.000 PO = 420.000

RUN NO. 845/ 0 GRADIENT INTERVAL = -5.00/ 5.00

DLT-X	DLT-Z	CN	CA	CLM	CY	CYN	CBL	XCP/L	CPB1	CPB2	CPBC
200.560	397.920	-.05463	.08057	-.02949	-.03369	-.00210	.00204	.12020	-.00987	-.01002	-.00865
200.430	498.610	-.12235	.08357	-.01622	-.03506	-.00199	.00096	.52747	-.00861	-.00894	-.00684
200.560	600.240	-.12796	.08574	-.01456	-.03518	-.00194	.00090	.54621	-.00741	-.00785	-.00564
	GRADIENT	.00000	.00000	.00000	.00000	.00000	.00000	.00000	.00000	.00000	.00000

RUN NO. 846/ 0 GRADIENT INTERVAL = -5.00/ 5.00

DLT-X	DLT-Z	CN	CA	CLM	CY	CYN	CBL	XCP/L	CPB1	CPB2	CPBC
400.520	401.190	-.10033	.08306	-.02040	-.03488	-.00205	.00118	.45671	-.00791	-.00823	-.00689
400.450	500.420	-.12700	.08464	-.01474	-.03528	-.00195	.00091	.54396	-.00792	-.00826	-.00702
400.510	599.990	-.12805	.08624	-.01456	-.03549	-.00194	.00090	.54631	-.00752	-.00789	-.00648
	GRADIENT	.00000	.00000	.00000	.00000	.00000	.00000	.00000	.00000	.00000	.00000

ORIGINAL PAGE IS OF POOR QUALITY

AEDC VA422(IA17) ORB AND ET SEPARATING(ORB DATA) (RTR146) (24 JUL 75)

REFERENCE DATA

SREF = 2690.0000 SQ.FT. XMRP = 1089.6000 IN. XO
LREF = 1290.3000 IN. YMRP = .0000 IN. YO
BREF = 1290.3000 IN. ZMRP = 375.0000 IN. ZO
SCALE = .0100

PARAMETRIC DATA

DLT-Y = .000 ALPHA = -5.000
BETA = 3.000 DLTALF = -15.000
DLTBTA = .000 MACH = 7.980
AILRON = .000 ELEVON = .000
GRID = 18.000 PO = 420.000

RUN NO. 850/ 0 GRADIENT INTERVAL = -5.00/ 5.00

DLT-X	DLT-Z	CN	CA	CLM	CY	CYN	CBL	XCP/L	CPB1	CPB2	CPBC
.386	500.170	.18618	.08736	-.04400	-.02808	-.00068	.00349	.92478	-.00594	-.00615	-.00520
.503	600.950	.10337	.08029	-.04541	-.02876	-.00029	.00308	1.09930	-.00564	-.00589	-.00468
.417	750.440	-.12146	.08366	-.01625	-.03508	-.00196	.00092	.52624	-.00633	-.00653	-.00550
1.270	805.100	-.12717	.08467	-.01477	-.03513	-.00195	.00088	.54388	-.00650	-.00670	-.00575
	GRADIENT	.00000	.00000	.00000	.00000	.00000	.00000	.00000	.00000	.00000	.00000

AEDC VA422(IA17) ORB AND ET SEPARATING(ORB DATA) (RTR146) (24 JUL 75)

REFERENCE DATA

SREF = 2690.0000 SQ.FT. XMRP = 1089.6000 IN. XO
LREF = 1290.3000 IN. YMRP = .0000 IN. YO
BREF = 1290.3000 IN. ZMRP = 375.0000 IN. ZO
SCALE = .0100

PARAMETRIC DATA

DLT-Y = .000 ALPHA = -5.000
BETA = 3.000 DLTALF = -15.000
DLTBTA = .000 MACH = 7.980
AILRON = .000 ELEVON = .000
GRID = 18.000 PO = 420.000

RUN NO. 851/ 0 GRADIENT INTERVAL = -5.00/ 5.00

DLT-X	DLT-Z	CN	CA	CLM	CY	CYN	CBL	XCP/L	CPB1	CPB2	CPBC
200.420	500.390	.08203	.07704	-.06122	-.03240	-.00230	.00377	1.40630	-.00830	-.00817	-.00774
200.190	599.870	.03518	.07346	-.04292	-.02948	-.00108	.00215	1.87980	-.00822	-.00815	-.00744
200.570	746.740	-.12724	.08456	-.01498	-.03519	-.00196	.00085	.54228	-.00511	-.00562	-.00350
200.480	800.230	-.12800	.08537	-.01469	-.03524	-.00193	.00089	.54523	-.00445	-.00495	-.00306
	GRADIENT	.00000	.00000	.00000	.00000	.00000	.00000	.00000	.00000	.00000	.00000

RUN NO. 852/ 0 GRADIENT INTERVAL = -5.00/ 5.00

DLT-X	DLT-Z	CN	CA	CLM	CY	CYN	CBL	XCP/L	CPB1	CPB2	CPBC
400.510	501.190	-.08058	.07801	-.02748	-.03405	-.00219	.00132	.31894	-.00080	-.00148	.00143
400.410	600.610	-.12105	.08096	-.01577	-.03492	-.00202	.00090	.52974	-.00392	-.00442	-.00234
400.390	750.250	-.12701	.08455	-.01481	-.03532	-.00195	.00088	.54340	-.00563	-.00600	-.00502
400.430	800.380	-.12810	.08614	-.01460	-.03538	-.00193	.00090	.54601	-.00505	-.00547	-.00430
	GRADIENT	.00000	.00000	.00000	.00000	.00000	.00000	.00000	.00000	.00000	.00000

AEDC VA422(IA17) ORB AND ET SEPARATING(ORB DATA) (RTR148) (24 JUL 75)

REFERENCE DATA

SREF = 2690.0000 SQ.FT. XMRP = 1089.6000 IN. XO
LREF = 1290.3000 IN. YMRP = .0000 IN. YO
BREF = 1290.3000 IN. ZMRP = 375.0000 IN. ZO
SCALE = .0100

PARAMETRIC DATA

DLT-Y = .000 ALPHA = -5.000
BETA = 3.000 DLTALF = -20.000
DLTBTA = .000 MACH = 7.980
AILRON = .000 ELEVON = .000
GRID = 18.000 PO = 370.000

RUN NO. 857/ 0 GRADIENT INTERVAL = -5.00/ 5.00

DLT-X	DLT-Z	CN	CA	CLM	CY	CYN	CBL	XCP/L	CPB1	CPB2	CPBC
.432	804.050	.06998	.08075	-.04363	-.02778	-.00135	.00539	1.28350	-.00047	-.00027	.00013
.507	901.120	-.07782	.08178	-.02615	-.03404	-.00213	.00146	.32404	-.00043	-.00002	.00009
.479	1000.300	-.12726	.08545	-.01482	-.03519	-.00196	.00091	.54359	-.00017	.00032	.00027
	GRADIENT	.00000	.00000	.00000	.00000	.00000	.00000	.00000	.00000	.00000	.00000

AEDC VA422(IA17) ORB AND ET SEPARATING(ORB DATA) (RTR148) (24 JUL 75)

REFERENCE DATA

SREF = 2690.0000 SQ.FT. XMRP = 1089.6000 IN. XO
LREF = 1290.3000 IN. YMRP = .0000 IN. YO
BREF = 1290.3000 IN. ZMRP = 375.0000 IN. ZO
SCALE = .0100

PARAMETRIC DATA

DLT-Y = .000 ALPHA = -5.000
BETA = 3.000 DLTALF = -20.000
DLTBTA = .000 MACH = 7.980
AILRON = .000 ELEVON = .000
GRID = 18.000 PO = 370.000

RUN NO. 853/ 0 GRADIENT INTERVAL = -5.00/ 5.00

DLT-X	DLT-Z	CN	CA	CLM	CY	CYN	CBL	XCP/L	CPB1	CPB2	CPBC
200.430	753.160	.12028	.07228	-.05444	-.02751	.00061	.00228	1.11270	-.00686	-.00756	-.00475
200.400	802.920	.01602	.07550	-.04252	-.02934	-.00221	.00329	3.31510	-.00894	-.00934	-.00728
200.470	900.460	-.12175	.08355	-.01598	-.03488	-.00197	.00092	.52878	-.01072	-.01092	-.00974
200.420	1000.300	-.12814	.08584	-.01473	-.03521	-.00193	.00086	.54502	-.01163	-.01178	-.01098
	GRADIENT	.00000	.00000	.00000	.00000	.00000	.00000	.00000	.00000	.00000	.00000

RUN NO. 854/ 0 GRADIENT INTERVAL = -5.00/ 5.00

DLT-X	DLT-Z	CN	CA	CLM	CY	CYN	CBL	XCP/L	CPB1	CPB2	CPBC
400.440	747.170	-.03073	.07227	-.02936	-.03123	-.00164	.00149	-.29517	-.00122	-.00245	.00269
400.320	800.390	-.02686	.07147	-.02692	-.03038	-.00116	.00092	-.34219	.00479	.00308	.01026
400.530	898.160	-.12504	.08363	-.01526	-.03475	-.00197	.00080	.53797	.00537	.00788	.01425
400.380	1000.300	-.12822	.08651	-.01449	-.03511	-.00195	.00089	.54702	.00722	.00617	.00916
	GRADIENT	.00000	.00000	.00000	.00000	.00000	.00000	.00000	.00000	.00000	.00000

AEDC VA422(IA17) ORB AND ET SEPARATING(ORB DATA) (RTR149) (24 JUL 75)

REFERENCE DATA

SREF = 2690.0000 SQ.FT. XMRP = 1089.6000 IN. XO
LREF = 1290.3000 IN. YMRP = .0000 IN. YO
BREF = 1290.3000 IN. ZMRP = 375.0000 IN. ZO
SCALE = .0100

PARAMETRIC DATA

DLT-Y = .000 ALPHA = .000
BETA = .000 DLTALF = .000
DLTBTA = .000 MACH = 7.980
AILRON = 15.000 ELEVON = .000
GRID = 21.000 PO = 300.000

RUN NO. 887/ 0 GRADIENT INTERVAL = -5.00/ 5.00

DLT-X	DLT-Z	CN	CA	CLM	CY	CYN	CBL	XCP/L	CPB1	CPB2	CPBC
.574	18.882	-.01782	.08029	-.01224	.00005	-.00006	.00225	-.02689	-.00883	-.00869	-.00863
.436	99.691	-.00601	.08941	-.00079	.00092	.00063	.00255	.52797	-.00845	-.00832	-.00828
.538	201.100	.03057	.08767	-.00699	.00136	-.00023	.00265	.88877	-.00797	-.00787	-.00784
.486	301.560	.02417	.07762	-.01717	.00083	-.00019	.00356	1.37040	-.00759	-.00746	-.00744
.527	400.370	-.03000	.07482	-.01506	.00033	.00020	.00220	.15813	-.00711	-.00698	-.00695
.553	497.480	-.04901	.07552	-.01164	-.00013	.00031	.00191	.42248	-.00670	-.00654	-.00652
	GRADIENT	.00000	.00000	.00000	.00000	.00000	.00000	.00000	.00000	.00000	.00000

AEDC VA422(IA17) ORB AND ET SEPARATING(ORB DATA) (RTR150) (24 JUL 75)

REFERENCE DATA

SREF = 2690.0000 SQ.FT. XMRP = 1089.6000 IN. XO
LREF = 1290.3000 IN. YMRP = .0000 IN. YO
BREF = 1290.3000 IN. ZMRP = 375.0000 IN. ZO
SCALE = .0100

PARAMETRIC DATA

DLT-Y = .000 ALPHA = .000
BETA = .000 DLTALF = -10.000
DLTBTA = .000 MACH = 7.980
AILRON = 15.000 ELEVON = .000
GRID = 21.000 PO = 300.000

RUN NO. 888/ 0 GRADIENT INTERVAL = -5.00/ 5.00

DLT-X	DLT-Z	CN	CA	CLM	CY	CYN	CBL	XCP/L	CPB1	CPB2	CPBC
.578	403.040	.13011	.07721	-.03312	.00162	-.00071	.00464	.91457	-.00644	-.00707	-.00545
.680	500.960	-.00093	.07365	-.01852	.00026	.00006	.00272	.00000	-.00618	-.00688	-.00504
.577	600.170	-.04578	.07413	-.01247	-.00007	.00029	.00187	.38770	-.00635	-.00711	-.00495
.587	750.100	-.04973	.07190	-.01164	-.00023	.00031	.00187	.42589	-.00859	-.00897	-.00730
-.364	801.740	-.04967	.07351	-.01155	-.00009	.00030	.00189	.42756	-.00964	-.00986	-.00839
	GRADIENT	.00000	.00000	.00000	.00000	.00000	.00000	.00000	.00000	.00000	.00000

AEDC VA422(IA17) ORB AND ET SEPARATING(ORB DATA) (RTR151) (24 JUL 75)

REFERENCE DATA

SREF = 2690.0000 SQ.FT. XMRP = 1089.6000 IN. XO
LREF = 1290.3000 IN. YMRP = .0000 IN. YO
BREF = 1290.3000 IN. ZMRP = 375.0000 IN. ZO
SCALE = .0100

PARAMETRIC DATA

DLT-Y = .000 ALPHA = .000
BETA = .000 DLTALF = -20.000
DLTBTA = .000 MACH = 7.980
AILRON = 15.000 ELEVON = .000
GRID = 21.000 PO = 300.000

RUN NO. 889/ 0 GRADIENT INTERVAL = -5.00/ 5.00

DLT-X	DLT-Z	CN	CA	CLM	CY	CYN	CBL	XCP/L	CPB1	CPB2	CPBC
.413	801.880	.06396	.06822	-.03338	.00023	.00011	.00235	1.18190	-.00442	-.00504	-.00260
.445	900.380	-.03860	.06944	-.01435	-.00009	.00024	.00168	.28832	-.00591	-.00639	-.00424
.432	1000.200	-.04825	.07184	-.01158	.00004	.00031	.00188	.41997	-.00720	-.00756	-.00576
	GRADIENT	.00000	.00000	.00000	.00000	.00000	.00000	.00000	.00000	.00000	.00000

AEDC VA422(IA17) ORB AND ET SEPARATING(ORB DATA) (RTR152) (24 JUL 75)

REFERENCE DATA

SREF = 2690.0000 SQ.FT. XMRP = 1089.6000 IN. XO
LREF = 1290.3000 IN. YMRP = .0000 IN. YO
BREF = 1290.3000 IN. ZMRP = 375.0000 IN. ZO
SCALE = .0100

PARAMETRIC DATA

DLT-Y = .000 ALPHA = -5.000
BETA = .000 DLTALF = .000
DLTBTA = .000 MACH = 7.980
AILRON = 15.000 ELEVON = .000
GRID = 20.000 PO = 300.000

RUN NO. 891/ 0 GRADIENT INTERVAL = -5.00/ 5.00

DLT-X	DLT-Z	CN	CA	CLM	CY	CYN	CBL	XCP/L	CPB1	CPB2	CPBC
.437	19.503	-.06361	.10511	-.00937	.00077	.00051	.00282	.51268	-.01107	-.01084	-.01074
.516	101.550	-.04184	.09801	-.00625	.00102	.00065	.00316	.51054	-.01105	-.01081	-.01079
.474	201.900	-.06051	.09533	-.01386	.00034	.00029	.00333	.43091	-.01091	-.01067	-.01072
.534	300.550	-.10661	.09059	-.01672	.00013	.00053	.00276	.50312	-.01082	-.01054	-.01066
.519	400.150	-.12995	.09032	-.01424	-.00023	.00057	.00257	.55045	-.01060	-.01032	-.01053
.538	496.730	-.13155	.09099	-.01374	-.00034	.00057	.00256	.55556	-.01033	-.01004	-.01028
	GRADIENT	.00000	.00000	.00000	.00000	.00000	.00000	.00000	.00000	.00000	.00000

AEDC VA422(IA17) ORB AND ET SEPARATING(ORB DATA) (RTR153) (24 JUL 75)

REFERENCE DATA

SREF = 2690.0000 SQ.FT. XMRP = 1089.6000 IN. XO
LREF = 1290.3000 IN. YMRP = .0000 IN. YO
BREF = 1290.3000 IN. ZMRP = 375.0000 IN. ZO
SCALE = .0100

PARAMETRIC DATA

DLT-Y = .000 ALPHA = -5.000
BETA = .000 DLTALF = -10.000
DLTBTA = .000 MACH = 7.980
AILRON = 15.000 ELEVON = .000
GRID = 20.000 PO = 300.000

RUN NO. 892/ 0 GRADIENT INTERVAL = -5.00/ 5.00

DLT-X	DLT-Z	CN	CA	CLM	CY	CYN	CBL	XCP/L	CPB1	CPB2	CPBC
.398	403.020	.03815	.08890	-.04181	.00100	-.00021	.00511	1.75580	-.01004	-.00968	-.00851
.411	500.440	-.10827	.08585	-.01956	.00020	.00050	.00266	.47931	-.01050	-.01010	-.00915
-.098	601.360	-.12966	.08880	-.01374	-.00005	.00056	.00253	.55403	-.01085	-.01034	-.00952
	GRADIENT	.00000	.00000	.00000	.00000	.00000	.00000	.00000	.00000	.00000	.00000

ORIGINAL PAGE IS OF POOR QUALITY

AEDC VA422(IA17) ORB AND ET SEPARATING(ORB DATA) (RTR154) (24 JUL 75)

REFERENCE DATA

SREF = 2690.0000 SQ.FT. XMRP = 1089.6000 IN. XO
LREF = 1290.3000 IN. YMRP = .0000 IN. YO
BREF = 1290.3000 IN. ZMRP = 375.0000 IN. ZO
SCALE = .0100

PARAMETRIC DATA

DLT-Y = .000 ALPHA = -5.000
BETA = .000 DLTALF = -20.000
DLTBTA = .000 MACH = 7.980
AILRON = 15.000 ELEVON = .000
GRID = 20.000 PO = 300.000

RUN NO. 893/ 0 GRADIENT INTERVAL = -5.00/ 5.00

DLT-X	DLT-Z	CN	CA	CLM	CY	CYN	CBL	XCP/L	CPB1	CPB2	CPBC
.371	803.700	.08271	.08515	-.04443	.00142	-.00058	.00585	1.19710	-.00449	-.00424	-.00241
.459	900.910	-.08262	.08337	-.02428	.00025	.00042	.00242	.36616	-.00490	-.00464	-.00283
.423	1000.300	-.12858	.08721	-.01391	-.00017	.00053	.00249	.55179	-.00534	-.00506	-.00321
	GRADIENT	.00000	.00000	.00000	.00000	.00000	.00000	.00000	.00000	.00000	.00000

AEDC VA422(IA17) ORB AND ET SEPARATING(ORB DATA) (RTR155) (24 JUL 75)

REFERENCE DATA

SREF = 2690.0000 SQ.FT. XMRP = 1089.6000 IN. XO
LREF = 1290.3000 IN. YMRP = .0000 IN. YO
BREF = 1290.3000 IN. ZMRP = 375.0000 IN. ZO
SCALE = .0100

PARAMETRIC DATA

DLT-Y = .000 ALPHA = .000
BETA = .000 DLTALF = .000
DLTBTA = .000 MACH = 7.980
AILRON = .000 ELEVON = -20.000
GRID = 21.000 PO = 300.000

RUN NO. 903/ 0 GRADIENT INTERVAL = -5.00/ 5.00

DLT-X	DLT-Z	CN	CA	CLM	CY	CYN	CBL	XCP/L	CPB1	CPB2	CPBC
.501	18.825	-.03397	.08003	-.00890	.00043	.00010	-.00005	.39786	-.01144	-.01124	-.01062
.512	99.677	-.02325	.09044	.00295	.00096	.00044	-.00006	.78702	-.01135	-.01115	-.01053
.468	201.070	.01128	.08748	-.00195	.00081	.00019	-.00046	.83305	-.01124	-.01105	-.01043
.440	301.680	.00282	.07721	-.01138	.00083	.00021	-.00022	.00000	-.01115	-.01095	-.01033
.520	400.360	-.04699	.07558	-.01106	.00057	.00024	-.00031	.42455	-.01112	-.01091	-.01031
.637	497.310	-.06367	.07606	-.00809	.00071	.00023	-.00032	.53300	-.01108	-.01088	-.01032
	GRADIENT	.00000	.00000	.00000	.00000	.00000	.00000	.00000	.00000	.00000	.00000

AEDC VA422(IA17) ORB AND ET SEPARATING(ORB DATA) (RTR156) (24 JUL 75)

REFERENCE DATA

SREF = 2690.0000 SQ.FT. XMRP = 1089.6000 IN. XO
LREF = 1290.3000 IN. YMRP = .0000 IN. YO
BREF = 1290.3000 IN. ZMRP = 375.0000 IN. ZO
SCALE = .0100

PARAMETRIC DATA

DLT-Y = .000 ALPHA = .000
BETA = .000 DLTALF = -10.000
DLTBTA = .000 MACH = 7.980
AILRON = .000 ELEVON = -20.000
GRID = 21.000 PO = 300.000

RUN NO. 904/ 0 GRADIENT INTERVAL = -5.00/ 5.00

DLT-X	DLT-Z	CN	CA	CLM	CY	CYN	CBL	XCP/L	CPB1	CPB2	CPBC
.508	403.050	.10218	.07545	-.02547	.00170	.00003	-.00007	.90928	-.00851	-.00856	-.00671
.589	500.890	-.02188	.07369	-.01381	.00072	.00022	-.00033	.02913	-.00854	-.00861	-.00657
.512	600.140	-.06014	.07513	-.00892	.00055	.00020	-.00031	.51162	-.00895	-.00901	-.00672
.455	749.990	-.06397	.07359	-.00805	.00058	.00025	-.00031	.53412	-.01070	-.01063	-.00886
-.251	801.550	-.06418	.07509	-.00797	.00059	.00025	-.00031	.53581	-.01142	-.01132	-.00969
	GRADIENT	.00000	.00000	.00000	.00000	.00000	.00000	.00000	.00000	.00000	.00000

AEDC VA422(IA17) ORB AND ET SEPARATING(ORB DATA) (RTR157) (24 JUL 75)

REFERENCE DATA

SREF = 2690.0000 SQ.FT. XMRP = 1089.6000 IN. XO
LREF = 1290.3000 IN. YMRP = .0000 IN. YO
BREF = 1290.3000 IN. ZMRP = 375.0000 IN. ZO
SCALE = .0100

PARAMETRIC DATA

DLT-Y = .000 ALPHA = .000
BETA = .000 DLTALF = -20.000
DLTBTA = .000 MACH = 7.980
AILRON = .000 ELEVON = -20.000
GRID = 21.000 PO = 300.000

RUN NO. 905/ 0 GRADIENT INTERVAL = -5.00/ 5.00

DLT-X	DLT-Z	CN	CA	CLM	CY	CYN	CBL	XCP/L	CPB1	CPB2	CPBC
.392	801.690	.03914	.06771	-.02888	.00153	.00002	-.00035	1.39780	.00145	-.00009	.00343
.441	900.370	-.05248	.06952	-.01099	.00050	.00020	-.00031	.45064	.00076	-.00082	.00285
.450	1000.300	-.06229	.07206	-.00802	.00047	.00020	-.00031	.53119	.00023	-.00140	.00237
	GRADIENT	.00000	.00000	.00000	.00000	.00000	.00000	.00000	.00000	.00000	.00000

AEDC VA422(IA17) ORB AND ET SEPARATING(ORB DATA) (RTR159) (24 JUL 75)

REFERENCE DATA

SREF = 2690.0000 SQ.FT. XMRP = 1089.6000 IN. XO
LREF = 1290.3000 IN. YMRP = .0000 IN. YO
BREF = 1290.3000 IN. ZMRP = 375.0000 IN. ZO
SCALE = .0100

PARAMETRIC DATA

DLT-Y = .000 ALPHA = -5.000
BETA = .000 DLTALF = .000
DLTBTA = .000 MACH = 7.980
AILRON = .000 ELEVON = -20.000
GRID = 20.000 PO = 300.000

RUN NO. 899/ 0 GRADIENT INTERVAL = -5.00/ 5.00

DLT-X	DLT-Z	CN	CA	CLM	CY	CYN	CBL	XCP/L	CPB1	CPB2	CPBC
.431	19.458	-.08291	.10724	-.00471	.00199	.00033	.00001	.60314	-.00839	-.00793	-.00803
.421	101.590	-.06441	.10084	-.00087	.00251	.00056	-.00002	.64647	-.00820	-.00774	-.00790
.587	201.820	-.08587	.09830	-.00740	.00188	-.00002	-.00021	.57383	-.00795	-.00748	-.00775
.519	300.620	-.12908	.09397	-.01117	.00085	.00012	-.00036	.57347	-.00755	-.00711	-.00743
.526	400.110	-.15061	.09399	-.00899	.00092	.00011	-.00036	.60033	-.00706	-.00660	-.00702
.491	496.560	-.15230	.09454	-.00860	.00095	.00012	-.00036	.60352	-.00642	-.00596	-.00642
	GRADIENT	.00000	.00000	.00000	.00000	.00000	.00000	.00000	.00000	.00000	.00000

AEDC VA422(IA17) ORB AND ET SEPARATING(ORB DATA) (RTR159) (24 JUL 75)

REFERENCE DATA

SREF = 2690.0000 SQ.FT. XMRP = 1089.6000 IN. XO
LREF = 1290.3000 IN. YMRP = .0000 IN. YO
BREF = 1290.3000 IN. ZMRP = 375.0000 IN. ZO
SCALE = .0100

PARAMETRIC DATA

DLT-Y = .000 ALPHA = -5.000
BETA = .000 DLTALF = -10.000
DLTBTA = .000 MACH = 7.980
AILRON = .000 ELEVON = -20.000
GRID = 20.000 PO = 300.000

RUN NO. 900/ 0 GRADIENT INTERVAL = -5.00/ 5.00

DLT-X	DLT-Z	CN	CA	CLM	CY	CYN	CBL	XCP/L	CPB1	CPB2	CPBC
.407	403.030	.00260	.08927	-.03229	.00179	-.00004	.00007	.00000	-.00885	-.00838	-.00735
.342	500.420	-.12959	.08919	-.01477	.00086	.00011	-.00023	.54603	-.00926	-.00881	-.00802
-.084	601.010	-.15062	.09280	-.00873	.00085	.00014	-.00036	.60203	-.00937	-.00890	-.00817
	GRADIENT	.00000	.00000	.00000	.00000	.00000	.00000	.00000	.00000	.00000	.00000

AEDC VA422(IA17) ORB AND ET SEPARATING(ORB DATA) (RTR160) (24 JUL 75)

REFERENCE DATA

SREF = 2690.0000 SQ.FT. XMRP = 1089.6000 IN. XO
LREF = 1290.3000 IN. YMRP = .0000 IN. YO
BREF = 1290.3000 IN. ZMRP = 375.0000 IN. ZO
SCALE = .0100

PARAMETRIC DATA

DLT-Y = .000 ALPHA = -5.000
BETA = .000 DLTALF = -20.000
DLTBTA = .000 MACH = 7.980
AILRON = .000 ELEVON = -20.000
GRID = 20.000 PO = 300.000

RUN NO. 901/ 0 GRADIENT INTERVAL = -5.00/ 5.00

DLT-X	DLT-Z	CN	CA	CLM	CY	CYN	CBL	XCP/L	CPB1	CPB2	CPBC
.338	804.020	.05227	.08527	-.03554	.00305	-.00049	.00142	1.34000	-.00412	-.00373	-.00172
.438	900.700	-.11050	.08652	-.01893	.00061	.00002	-.00053	.48871	-.00454	-.00412	-.00227
.447	1000.400	-.14922	.09130	-.00893	.00060	.00012	-.00035	.60015	-.00475	-.00434	-.00244
	GRADIENT	.00000	.00000	.00000	.00000	.00000	.00000	.00000	.00000	.00000	.00000

AEDC VA422(IA17) ORB AND ET SEPARATING(ORB DATA) (RTR161) (24 JUL 75)

REFERENCE DATA

SREF = 2690.0000 SQ.FT. XMRP = 1089.6000 IN. XO
LREF = 1290.3000 IN. YMRP = .0000 IN. YO
BREF = 1290.3000 IN. ZMRP = 375.0000 IN. ZO
SCALE = .0100

PARAMETRIC DATA

DLT-Y = .000 ALPHA = .000
BETA = .000 DLTALF = .000
DLTBTA = .000 MACH = 7.980
AILRON = .000 ELEVON = -40.000
GRID = 21.000 PO = 300.000

RUN NO. 914/ 0 GRADIENT INTERVAL = -5.00/ 5.00

DLT-X	DLT-Z	CN	CA	CLM	CY	CYN	CBL	XCP/L	CPB1	CPB2	CPBC
.574	18.977	-.05547	.09016	-.00582	.00025	.00009	.00012	.55511	-.01212	-.01164	-.01094
.448	99.634	-.04945	.10597	.00722	.00077	.00039	.00008	.80596	-.01211	-.01164	-.01095
.579	200.970	-.01627	.10174	.00334	.00128	.00010	-.00055	.86524	-.01209	-.01163	-.01092
.546	301.680	-.02099	.09261	-.00641	.00143	-.00003	.00012	.35453	-.01211	-.01169	-.01100
.407	400.400	-.07089	.09032	-.00649	.00087	.00011	-.00022	.56852	-.01214	-.01174	-.01109
.542	496.850	-.08830	.09127	-.00351	.00063	.00010	-.00024	.62024	-.01211	-.01172	-.01112
	GRADIENT	.00000	.00000	.00000	.00000	.00000	.00000	.00000	.00000	.00000	.00000

ORIGINAL PAGE IS OF POOR QUALITY

AEDC VA422(1A17) ORB AND ET SEPARATING(ORB DATA) (RTR162) (24 JUL 75)

REFERENCE DATA

SREF = 2690.0000 SQ.FT. XMRP = 1089.6000 IN. XO
LREF = 1290.3000 IN. YMRP = .0000 IN. YO
BREF = 1290.3000 IN. ZMRP = 375.0000 IN. ZO
SCALE = .0100

PARAMETRIC DATA

DLT-Y = .000 ALPHA = .000
BETA = .000 DLTALF = -10.000
DLTBTA = .000 MACH = 7.980
AILRON = .000 ELEVON = -40.000
GRID = 21.000 PO = 300.000

RUN NO. 915/ 0 GRADIENT INTERVAL = -5.00/ 5.00

DLT-X	DLT-Z	CN	CA	CLM	CY	CYN	CBL	XCP/L	CPB1	CPB2	CPBC
.537	403.060	.07504	.08975	-.02037	.00151	-.00009	-.00027	.93148	-.01287	-.00691	-.00820
.457	500.820	-.04675	.08834	-.00919	.00088	.00009	-.00025	.46349	-.01314	-.00671	-.00831
.529	600.120	-.08454	.08940	-.00444	.00069	.00011	-.00024	.60745	-.01335	-.00642	-.00834
.497	750.090	-.08834	.09116	-.00349	.00058	.00008	-.00024	.62053	-.01350	-.00539	-.00780
-.442	801.030	-.08833	.09117	-.00348	.00055	.00009	-.00024	.62066	-.01366	-.00483	-.00753
	GRADIENT	.00000	.00000	.00000	.00000	.00000	.00000	.00000	.00000	.00000	.00000

AEDC VA422(1A17) ORB AND ET SEPARATING(ORB DATA) (RTR163) (24 JUL 75)

REFERENCE DATA

SREF = 2690.0000 SQ.FT. XMRP = 1089.6000 IN. XO
LREF = 1290.3000 IN. YMRP = .0000 IN. YO
BREF = 1290.3000 IN. ZMRP = 375.0000 IN. ZO
SCALE = .0100

PARAMETRIC DATA

DLT-Y = .000 ALPHA = .000
BETA = .000 DLTALF = -20.000
DLTBTA = .000 MACH = 7.980
AILRON = .000 ELEVON = -40.000
GRID = 21.000 PO = 300.000

RUN NO. 916/ 0 GRADIENT INTERVAL = -5.00/ 5.00

DLT-X	DLT-Z	CN	CA	CLM	CY	CYN	CBL	XCP/L	CPB1	CPB2	CPBC
.419	801.670	.01317	.08177	-.02396	.00128	-.00012	-.00026	2.47980	-.00454	-.00350	-.00167
.427	900.390	-.07643	.08479	-.00642	.00072	.00005	-.00023	.57601	-.00508	-.00390	-.00223
.380	1000.300	-.08578	.08781	-.00356	.00076	.00009	-.00022	.61853	-.00530	-.00398	-.00230
	GRADIENT	.00000	.00000	.00000	.00000	.00000	.00000	.00000	.00000	.00000	.00000

AEDC VA422(IA17) ORB AND ET SEPARATING(ORB DATA) (RTR164) (24 JUL 75)

REFERENCE DATA

SREF = 2690.0000 SQ.FT. XMRP = 1089.6000 IN. XO
LREF = 1290.3000 IN. YMRP = .0000 IN. YO
BREF = 1290.3000 IN. ZMRP = 375.0000 IN. ZO
SCALE = .0100

PARAMETRIC DATA

DLT-Y = .000 ALPHA = -5.000
BETA = .000 DLTALF = .000
DLTBTA = .000 MACH = 7.980
AILRON = .000 ELEVON = -40.000
GRID = 20.000 PO = 300.000

RUN NO. 918/ 0 GRADIENT INTERVAL = -5.00/ 5.00

DLT-X	DLT-Z	CN	CA	CLM	CY	CYN	CBL	XCP/L	CPB1	CPB2	CPBC
.478	19.429	-.11920	.12770	.00169	.00177	.00021	.00016	.67422	-.01174	-.00981	-.00845
.516	101.650	-.10154	.12628	.00669	.00301	.00058	.00031	.72584	-.01202	-.01002	-.00865
.420	201.730	-.12964	.12696	.00170	.00197	-.00022	-.00023	.67309	-.01231	-.01026	-.00899
.563	300.640	-.17162	.12154	-.00238	.00111	.00002	-.00036	.64614	-.01248	-.01041	-.00923
.495	400.090	-.19420	.12158	-.00044	.00102	.00002	-.00036	.65775	-.01258	-.01053	-.00944
.421	500.120	-.19597	.12246	.00002	.00114	.00004	-.00036	.63009	-.01256	-.01051	-.00943
	GRADIENT	.00000	.00000	.00000	.00000	.00000	.00000	.00000	.00000	.00000	.00000

AEDC VA422(IA17) ORB AND ET SEPARATING(ORB DATA) (RTR165) (24 JUL 75)

REFERENCE DATA

SREF = 2690.0000 SQ.FT. XMRP = 1089.6000 IN. XO
LREF = 1290.3000 IN. YMRP = .0000 IN. YO
BREF = 1290.3000 IN. ZMRP = 375.0000 IN. ZO
SCALE = .0100

PARAMETRIC DATA

DLT-Y = .000 ALPHA = -5.000
BETA = .000 DLTALF = -10.000
DLTBTA = .000 MACH = 7.980
AILRON = .000 ELEVON = -40.000
GRID = 20.000 PO = 300.000

RUN NO. 919/ 0 GRADIENT INTERVAL = -5.00/ 5.00

DLT-X	DLT-Z	CN	CA	CLM	CY	CYN	CBL	XCP/L	CPB1	CPB2	CPBC
.471	403.030	-.03850	.11592	-.02333	.00206	-.00020	.00018	.05407	-.00826	-.00689	-.00443
.483	500.490	-.17060	.11552	-.00657	.00123	.00000	-.00025	.62148	-.00897	-.00761	-.00551
-.149	600.400	-.19228	.11960	-.00029	.00093	.00003	-.00039	.65847	-.00930	-.00795	-.00583
	GRADIENT	.00000	.00000	.00000	.00000	.00000	.00000	.00000	.00000	.00000	.00000

ORIGINAL PAGE IS OF POOR QUALITY

AEDC VA422(IA17) ORB AND ET SEPARATING(ORB DATA) (RTR168) (24 JUL 75)

REFERENCE DATA

SREF = 2690.0000 SQ.FT. XMRP = 1089.6000 IN. XO
LREF = 1290.3000 IN. YMRP = .0000 IN. YO
BREF = 1290.3000 IN. ZMRP = 375.0000 IN. ZO
SCALE = .0100

PARAMETRIC DATA

DLT-Y = .000 ALPHA = -5.000
BETA = .000 DLTALF = -20.000
DLTBTA = .000 MACH = 7.980
AILRON = .000 ELEVON = -40.000
GRID = 20.000 PO = 300.000

RUN NO. 920/ 0 GRADIENT INTERVAL = -5.00/ 5.00

DLT-X	DLT-Z	CN	CA	CLM	CY	CYN	CBL	XCP/L	CPB1	CPB2	CPBC
.352	804.080	.00850	.11485	-.02583	.00400	-.00079	.00143	3.69870	-.00123	-.00070	.00240
.426	900.760	-.15274	.11227	-.01037	.00098	-.00006	-.00063	.59208	-.00160	-.00109	.00187
.448	1000.300	-.19081	.11776	-.00053	.00086	.00003	-.00038	.65722	-.00169	-.00121	.00187
	GRADIENT	.00000	.00000	.00000	.00000	.00000	.00000	.00000	.00000	.00000	.00000

AEDC VA422(IA17) ORB AND ET SEPARATING(ORB DATA) (RTR167) (24 JUL 75)

REFERENCE DATA

SREF = 2690.0000 SQ.FT. XMRP = 1089.6000 IN. XO
LREF = 1290.3000 IN. YMRP = .0000 IN. YO
BREF = 1290.3000 IN. ZMRP = 375.0000 IN. ZO
SCALE = .0100

PARAMETRIC DATA

DLT-Y = .000 ALPHA = -10.000
BETA = 3.000 DLTALF = .000
DLTBTA = .000 MACH = 7.980
AILRON = .000 ELEVON = .000
GRID = 8.000 PO = 300.000

RUN NO. 922/ 0 GRADIENT INTERVAL = -5.00/ 5.00

DLT-X	DLT-Z	CN	CA	CLM	CY	CYN	CBL	XCP/L	CPB1	CPB2	CPBC
.539	31.721	-.09047	.12427	-.00724	-.04671	-.00146	.00217	.57999	-.00975	-.00867	-.00840
.554	102.450	-.10936	.10868	-.01341	-.04062	-.00045	.00194	.53742	-.01078	-.00949	-.00954
.479	201.450	-.15923	.10128	-.01970	-.04034	-.00041	.00266	.53630	-.01143	-.01004	-.01041
.486	300.190	-.19138	.10053	-.02085	-.04133	-.00049	.00222	.55104	-.01167	-.01024	-.01083
.539	400.120	-.19983	.10128	-.01928	-.04173	-.00041	.00203	.56352	-.01175	-.01029	-.01093
.631	500.230	-.20061	.10182	-.01909	-.04175	-.00041	.00208	.56486	-.01173	-.01029	-.01092
	GRADIENT	.00000	.00000	.00000	.00000	.00000	.00000	.00000	.00000	.00000	.00000

RUN NO. 923/ 0 GRADIENT INTERVAL = -5.00/ 5.00

DLT-X	DLT-Z	CN	CA	CLM	CY	CYN	CBL	XCP/L	CPB1	CPB2	CPBC
200.460	31.537	-.07495	.11497	-.00004	-.04503	-.00088	.00206	.65953	-.00981	-.00910	-.00873
200.530	97.248	-.11285	.10690	-.01215	-.03918	-.00054	.00216	.55233	-.00959	-.00889	-.00843
200.470	197.790	-.16119	.10129	-.02077	-.04035	-.00043	.00259	.53116	-.00904	-.00840	-.00764
200.340	299.080	-.19388	.10024	-.02035	-.04106	-.00050	.00218	.55503	-.00843	-.00788	-.00702
200.380	399.970	-.19928	.10105	-.01914	-.04141	-.00042	.00199	.56395	-.00806	-.00760	-.00669
200.430	500.140	-.20028	.10159	-.01898	-.04153	-.00042	.00205	.56522	-.00789	-.00746	-.00668
	GRADIENT	.00000	.00000	.00000	.00000	.00000	.00000	.00000	.00000	.00000	.00000

AEDC VA422(IA17) ORB AND ET SEPARATING(ORB DATA) (RTR168) (24 JUL 75)

REFERENCE DATA

SREF = 2690.0000 SQ.FT. XMRP = 1089.6000 IN. XO
LREF = 1290.3000 IN. YMRP = .0000 IN. YO
BREF = 1290.3000 IN. ZMRP = 375.0000 IN. ZO
SCALE = .0100

PARAMETRIC DATA

DLT-Y = .000 ALPHA = -10.000
BETA = 3.000 DLTALF = -5.000
DLTBTA = .000 MACH = 7.980
AILRON = .000 ELEVON = .000
GRID = 8.000 PO = 300.000

RUN NO. 926/ 0 GRADIENT INTERVAL = -5.00/ 5.00

DLT-X	DLT-Z	CN	CA	CLM	CY	CYN	CBL	XCP/L	CPB1	CPB2	CPBC
.420	203.890	-.02964	.10353	-.02804	-.03797	-.00065	.00320	-.28583	-.00612	-.00551	-.00439
.485	301.420	-.13473	.09720	-.02946	-.03966	-.00061	.00296	.44137	-.00749	-.00684	-.00599
.464	400.250	-.18879	.09727	-.02131	-.04116	-.00050	.00208	.54713	-.00865	-.00798	-.00786
.472	500.240	-.19605	.10004	-.01971	-.04155	-.00042	.00187	.55945	-.00879	-.00812	-.00822
.200	598.620	-.19991	.10143	-.01919	-.04153	-.00040	.00202	.56402	-.00859	-.00797	-.00804
	GRADIENT	.00000	.00000	.00000	.00000	.00000	.00000	.00000	.00000	.00000	.00000

RUN NO. 927/ 0 GRADIENT INTERVAL = -5.00/ 5.00

DLT-X	DLT-Z	CN	CA	CLM	CY	CYN	CBL	XCP/L	CPB1	CPB2	CPBC
200.410	199.120	-.06340	.09927	-.02933	-.03823	-.00060	.00391	.19739	-.00555	-.00507	-.00419
200.340	297.670	-.16181	.09867	-.02393	-.04050	-.00057	.00268	.51211	-.00509	-.00470	-.00356
200.360	399.220	-.19294	.09885	-.02029	-.04121	-.00048	.00201	.55486	-.00417	-.00383	-.00241
200.400	500.080	-.19434	.09957	-.01972	-.04146	-.00044	.00185	.55853	-.00350	-.00324	-.00183
200.430	600.100	-.19970	.10132	-.01901	-.04146	-.00042	.00204	.56480	-.00330	-.00309	-.00191
	GRADIENT	.00000	.00000	.00000	.00000	.00000	.00000	.00000	.00000	.00000	.00000

AEDC VA422(IA17) ORB AND ET SEPARATING(ORB DATA) (RTR169) (24 JUL 75)

REFERENCE DATA

SREF = 2690.0000 SQ.FT. XMRP = 1089.6000 IN. XO
LREF = 1290.3000 IN. YMRP = .0000 IN. YO
BREF = 1290.3000 IN. ZMRP = 375.0000 IN. ZO
SCALE = .0100

PARAMETRIC DATA

DLT-Y = .000 ALPHA = -10.000
BETA = 3.000 DLTALF = -10.000
DLTBTA = .000 MACH = 7.980
AILRON = .000 ELEVON = .000
GRID = 8.000 PO = 300.000

RUN NO. 928/ 0 GRADIENT INTERVAL = -5.00/ 5.00

DLT-X	DLT-Z	CN	CA	CLM	CY	CYN	CBL	XCP/L	CPB1	CPB2	CPBC
.456	400.560	-.01324	.09818	-.04777	-.03852	-.00062	.00430	-2.94920	-.00386	-.00360	-.00233
.327	503.520	-.02800	.09480	-.04117	-.03717	-.00058	.00328	-.92320	-.00525	-.00487	-.00389
.381	600.450	-.17990	.09818	-.02320	-.04108	-.00052	.00196	.53105	-.00638	-.00593	-.00587
.489	700.330	-.19593	.09979	-.01958	-.04156	-.00043	.00187	.55955	-.00644	-.00595	-.00590
.445	801.240	-.19908	.10110	-.01928	-.04148	-.00042	.00199	.56317	-.00616	-.00568	-.00563
	GRADIENT	.00000	.00000	.00000	.00000	.00000	.00000	.00000	.00000	.00000	.00000

AEDC VA422(IA17) ORB AND ET SEPARATING(ORB DATA) (RTR169) (24 JUL 75)

REFERENCE DATA

SREF = 2690.0000 SQ.FT. XMRP = 1089.6000 IN. XO
LREF = 1290.3000 IN. YMRP = .0000 IN. YO
BREF = 1290.3000 IN. ZMRP = 375.0000 IN. ZO
SCALE = .0100

PARAMETRIC DATA

DLT-Y = .000 ALPHA = -10.000
BETA = 3.000 DLTALF = -10.000
DLTBTA = .000 MACH = 7.980
AILRON = .000 ELEVON = .000
GRID = 8.000 PO = 300.000

RUN NO. 929/ 0 GRADIENT INTERVAL = -5.00/ 5.00

DLT-X	DLT-Z	CN	CA	CLM	CY	CYN	CBL	XCP/L	CPB1	CPB2	CPBC
200.330	398.160	-.11263	.09326	-.03883	-.03986	-.00073	.00322	.31523	-.00302	-.00292	-.00165
200.290	499.060	-.18590	.09505	-.02154	-.04107	-.00055	.00214	.54416	-.00128	-.00136	.00094
200.250	600.020	-.19022	.09657	-.02033	-.04105	-.00050	.00191	.55315	.00147	.00122	.00433
200.440	700.180	-.19478	.09953	-.01966	-.04138	-.00044	.00185	.55909	.00292	.00273	.00556
200.490	800.190	-.19900	.10116	-.01916	-.04138	-.00042	.00201	.56374	.00251	.00238	.00440
	GRADIENT	.00000	.00000	.00000	.00000	.00000	.00000	.00000	.00000	.00000	.00000

RUN NO. 930/ 0 GRADIENT INTERVAL = -5.00/ 5.00

DLT-X	DLT-Z	CN	CA	CLM	CY	CYN	CBL	XCP/L	CPB1	CPB2	CPBC
400.540	400.970	-.16023	.09555	-.02761	-.04043	-.00069	.00251	.48770	-.00126	-.00091	.00007
400.470	500.680	-.19002	.09723	-.02007	-.04129	-.00048	.00196	.55440	-.00208	-.00180	-.00120
400.390	600.620	-.19177	.09852	-.01990	-.04146	-.00046	.00190	.55621	-.00212	-.00187	-.00148
400.300	700.380	-.19550	.10002	-.01972	-.04170	-.00043	.00188	.55912	-.00147	-.00126	-.00087
400.370	800.110	-.19983	.10165	-.01906	-.04134	-.00042	.00206	.56463	-.00036	-.00024	.00046
	GRADIENT	.00000	.00000	.00000	.00000	.00000	.00000	.00000	.00000	.00000	.00000

AEDC VA422(IA17) ORB AND ET SEPARATING(ORB DATA) (RTR170) (24 JUL 75)

REFERENCE DATA

SREF = 2690.0000 SQ.FT. XMRP = 1089.6000 IN. XO
LREF = 1290.3000 IN. YMRP = .0000 IN. YO
BREF = 1290.3000 IN. ZMRP = 375.0000 IN. ZO
SCALE = .0100

PARAMETRIC DATA

DLT-Y = .000 ALPHA = -10.000
BETA = 3.000 DLTALF = -15.000
DLTBTA = .000 MACH = 7.980
AILRON = .000 ELEVON = .000
GRID = 8.000 PO = 300.000

RUN NO. 934/ 0 GRADIENT INTERVAL = -5.00/ 5.00

DLT-X	DLT-Z	CN	CA	CLM	CY	CYN	CBL	XCP/L	CPB1	CPB2	CPBC
.412	502.390	.09392	.10836	-.04103	-.03809	-.00079	.00499	1.09680	.00197	.00184	.00296
.497	603.410	.05981	.09841	-.04867	-.03485	-.00027	.00512	1.47370	.00217	.00209	.00351
.415	702.920	-.03590	.09336	-.04499	-.03696	-.00086	.00525	-.59321	.00137	.00138	.00277
.985	804.670	-.17846	.09569	-.02356	-.04072	-.00054	.00203	.52796	-.00062	-.00049	.00021
	GRADIENT	.00000	.00000	.00000	.00000	.00000	.00000	.00000	.00000	.00000	.00000

AEDC VA422(IA17) ORB AND ET SEPARATING(ORB DATA) (RTR170) (24 JUL 75)

REFERENCE DATA

SREF = 2690.0000 SQ.FT. XMRP = 1089.6000 IN. XO
LREF = 1290.3000 IN. YMRP = .0000 IN. YO
BREF = 1290.3000 IN. ZMRP = 375.0000 IN. ZO
SCALE = .0100

PARAMETRIC DATA

DLT-Y = .000 ALPHA = -10.000
BETA = 3.000 DLTALF = -15.000
DLTBTA = .000 MACH = 7.980
AILRON = .000 ELEVON = .000
GRID = 8.000 PO = 300.000

RUN NO. 935/ 0 GRADIENT INTERVAL = -5.00/ 5.00

DLT-X	DLT-Z	CN	CA	CLM	CY	CYN	CBL	XCP/L	CPB1	CPB2	CPBC
200.290	496.650	.01186	.09651	-.05558	-.03759	-.00097	.00536	5.34560	.00007	-.00002	.00049
200.540	600.540	-.04123	.08917	-.05223	-.03841	-.00080	.00344	-.60671	.00032	.00009	.00136
200.170	700.250	-.06489	.09001	-.03745	-.03848	-.00048	.00224	.08290	.00200	.00161	.00376
200.290	797.990	-.19054	.09653	-.02035	-.04090	-.00053	.00195	.55323	.00511	.00432	.00759
	GRADIENT	.00000	.00000	.00000	.00000	.00000	.00000	.00000	.00000	.00000	.00000

RUN NO. 936/ 0 GRADIENT INTERVAL = -5.00/ 5.00

DLT-X	DLT-Z	CN	CA	CLM	CY	CYN	CBL	XCP/L	CPB1	CPB2	CPBC
400.490	501.830	-.09965	.09118	-.04029	-.03936	-.00078	.00338	.25567	.01503	.01456	.01892
400.490	600.790	-.17869	.09198	-.02258	-.04002	-.00073	.00217	.53365	.01155	.01138	.01580
400.550	700.680	-.18720	.09314	-.02032	-.04033	-.00064	.00201	.55147	.00820	.00792	.01137
400.380	800.370	-.19029	.09681	-.01995	-.04079	-.00047	.00186	.55517	.00759	.00700	.01013
	GRADIENT	.00000	.00000	.00000	.00000	.00000	.00000	.00000	.00000	.00000	.00000

AEDC VA422(IA17) ORB AND ET SEPARATING(ORB DATA) (RTR171) (24 JUL 75)

REFERENCE DATA

SREF = 2690.0000 SQ.FT. XMRP = 1089.6000 IN. XO
LREF = 1290.3000 IN. YMRP = .0000 IN. YO
BREF = 1290.3000 IN. ZMRP = 375.0000 IN. ZO
SCALE = .0100

PARAMETRIC DATA

DLT-Y = .000 ALPHA = -5.000
BETA = .000 DLTALF = .000
DLTBTA = .000 MACH = 7.980
AILRON = .000 ELEVON = .000
GRID = 8.000 PO = 300.000

RUN NO. 938/ 0 GRADIENT INTERVAL = -5.00/ 5.00

DLT-X	DLT-Z	CN	CA	CLM	CY	CYN	CBL	XCP/L	CPB1	CPB2	CPBC
.412	19.367	-.06359	.10335	-.00954	.00237	.00036	.00027	.51004	-.01046	-.01113	-.01140
.481	101.490	-.04077	.09688	-.00641	.00308	.00060	.00023	.50277	-.01039	-.01109	-.01148
.475	201.840	-.05943	.09350	-.01372	.00245	.00002	.00014	.42921	-.01022	-.01094	-.01144
.484	300.620	-.10357	.08908	-.01720	.00127	.00016	-.00007	.49396	-.01005	-.01080	-.01141
.532	400.230	-.12625	.08893	-.01498	.00128	.00016	-.00007	.54139	-.00982	-.01059	-.01132
.556	496.790	-.12861	.08952	-.01438	.00138	.00019	-.00007	.54822	-.00951	-.01030	-.01114
	GRADIENT	.00000	.00000	.00000	.00000	.00000	.00000	.00000	.00000	.00000	.00000

ORIGINAL PAGE IS OF POOR QUALITY

AEDC VA422(IA17) ORB AND ET SEPARATING(ORB DATA) (RTR171) (24 JUL 75)

REFERENCE DATA

SREF = 2690.0000 SQ.FT. XMRP = 1089.6000 IN. XO
LREF = 1290.3000 IN. YMRP = .0000 IN. YO
BREF = 1290.3000 IN. ZMRP = 375.0000 IN. ZO
SCALE = .0100

PARAMETRIC DATA

DLT-Y = .000 ALPHA = -5.000
BETA = .000 DLTALF = .000
DLTBTA = .000 MACH = 7.980
AILRON = .000 ELEVON = .000
GRID = 8.000 PO = 300.000

RUN NO. 939/ 0 GRADIENT INTERVAL = -5.00/ 5.00

DLT-X	DLT-Z	CN	CA	CLM	CY	CYN	CBL	XCP/L	CPB1	CPB2	CPBC
200.460	22.614	-.02230	.10406	.00012	.00482	.00105	.00044	.66543	-.01169	-.01216	-.01222
200.390	97.983	-.04917	.09441	-.00561	.00160	.00053	-.00008	.54584	-.01193	-.01229	-.01221
200.440	198.540	-.06924	.09032	-.01513	.00172	.00015	.00018	.44147	-.01185	-.01208	-.01187
200.480	298.470	-.11112	.08847	-.01722	.00143	.00017	-.00007	.50503	-.01173	-.01189	-.01162
200.510	399.900	-.12813	.08866	-.01430	.00134	.00020	-.00007	.54842	-.01172	-.01186	-.01159
200.530	500.150	-.12838	.08909	-.01435	.00129	.00017	-.00007	.54820	-.01175	-.01188	-.01156
	GRADIENT	.00000	.00000	.00000	.00000	.00000	.00000	.00000	.00000	.00000	.00000

AEDC VA422(IA17) ORB AND ET SEPARATING(ORB DATA) (RTR172) (24 JUL 75)

REFERENCE DATA

SREF = 2690.0000 SQ.FT. XMRP = 1089.6000 IN. XO
LREF = 1290.3000 IN. YMRP = .0000 IN. YO
BREF = 1290.3000 IN. ZMRP = 375.0000 IN. ZO
SCALE = .0100

PARAMETRIC DATA

DLT-Y = .000 ALPHA = -5.000
BETA = .000 DLTALF = -5.000
DLTBTA = .000 MACH = 7.980
AILRON = .000 ELEVON = .000
GRID = 8.000 PO = 300.000

RUN NO. 942/ 0 GRADIENT INTERVAL = -5.00/ 5.00

DLT-X	DLT-Z	CN	CA	CLM	CY	CYN	CBL	XCP/L	CPB1	CPB2	CPBC
.566	200.050	.10171	.09477	-.01717	.00249	.00043	.00080	.82883	-.01208	-.01195	-.01113
.422	301.780	-.05551	.08724	-.01952	.00151	.00014	.00008	.30833	-.01272	-.01276	-.01203
.538	400.270	-.11172	.08770	-.01776	.00130	.00018	-.00008	.50107	-.01281	-.01281	-.01217
.454	500.200	-.12871	.08847	-.01429	.00129	.00017	-.00007	.54901	-.01277	-.01277	-.01215
-.037	598.900	-.12890	.08908	-.01427	.00115	.00018	-.00006	.54927	-.01271	-.01270	-.01209
	GRADIENT	.00000	.00000	.00000	.00000	.00000	.00000	.00000	.00000	.00000	.00000

RUN NO. 943/ 0 GRADIENT INTERVAL = -5.00/ 5.00

DLT-X	DLT-Z	CN	CA	CLM	CY	CYN	CBL	XCP/L	CPB1	CPB2	CPBC
200.450	197.470	.02475	.09152	-.02518	.00315	-.00000	-.00015	1.67750	-.01203	-.01177	-.01101
200.500	297.400	-.07536	.08790	-.01871	.00154	.00020	-.00006	.41170	-.01189	-.01158	-.01069
200.460	398.790	-.11959	.08750	-.01632	.00125	.00015	-.00008	.52356	-.01160	-.01125	-.01025
200.530	500.090	-.12790	.08831	-.01423	.00125	.00019	-.00007	.54878	-.01136	-.01104	-.01003
200.500	600.080	-.12819	.08878	-.01423	.00118	.00021	-.00007	.54899	-.01127	-.01099	-.01002
	GRADIENT	.00000	.00000	.00000	.00000	.00000	.00000	.00000	.00000	.00000	.00000

AEDC VA422(1A17) ORB AND ET SEPARATING(ORB DATA) (RTR173) (24 JUL 75)

REFERENCE DATA

SREF = 2690.0000 SQ.FT. XMRP = 1089.6000 IN. XO
LREF = 1290.3000 IN. YMRP = .0000 IN. YO
BREF = 1290.3000 IN. ZMRP = 375.0000 IN. ZO
SCALE = .0100

PARAMETRIC DATA

DLT-Y = .000 ALPHA = -5.000
BETA = .000 DLTALF = -10.000
DLTBTA = .000 MACH = 7.980
AILRON = .000 ELEVON = .000
GRID = 8.000 PO = 300.000

RUN NO. 944/ 0 GRADIENT INTERVAL = -5.00/ 5.00

DLT-X	DLT-Z	CN	CA	CLM	CY	CYN	CBL	XCP/L	CPB1	CPB2	CPBC
.439	403.050	.03818	.08458	-.04042	.00260	-.00005	.00072	1.71920	-.01145	-.01135	-.01020
.412	500.550	-.10452	.08412	-.02067	.00130	.00018	.00007	.46223	-.01186	-.01177	-.01087
-.083	601.320	-.12770	.08711	-.01435	.00124	.00020	-.00006	.54766	-.01199	-.01189	-.01110
	GRADIENT	.00000	.00000	.00000	.00000	.00000	.00000	.00000	.00000	.00000	.00000

RUN NO. 945/ 0 GRADIENT INTERVAL = -5.00/ 5.00

DLT-X	DLT-Z	CN	CA	CLM	CY	CYN	CBL	XCP/L	CPB1	CPB2	CPBC
200.410	398.530	-.05598	.08224	-.02830	.00179	.00014	.00022	.15455	-.01028	-.01016	-.00883
200.400	499.170	-.12142	.08509	-.01584	.00115	.00018	-.00006	.52955	-.00960	-.00953	-.00765
200.530	600.230	-.12740	.08738	-.01418	.00109	.00019	-.00006	.54859	-.00863	-.00857	-.00646
	GRADIENT	.00000	.00000	.00000	.00000	.00000	.00000	.00000	.00000	.00000	.00000

RUN NO. 946/ 0 GRADIENT INTERVAL = -5.00/ 5.00

DLT-X	DLT-Z	CN	CA	CLM	CY	CYN	CBL	XCP/L	CPB1	CPB2	CPBC
400.440	400.860	-.10077	.08458	-.01992	.00138	.00018	-.00006	.46232	-.00845	-.00848	-.00701
400.470	500.400	-.12658	.08606	-.01432	.00112	.00019	-.00006	.54689	-.00845	-.00847	-.00707
400.410	600.010	-.12735	.08805	-.01421	.00127	.00018	-.00006	.54844	-.00821	-.00819	-.00662
	GRADIENT	.00000	.00000	.00000	.00000	.00000	.00000	.00000	.00000	.00000	.00000

AEDC VA422(IA17) ORB AND ET SEPARATING(ORB DATA) (RTR174) (24 JUL 75)

REFERENCE DATA

SREF = 2690.0000 SQ.FT. XMRP = 1089.6000 IN. XO
LREF = 1290.3000 IN. YMRP = .0000 IN. YO
BREF = 1290.3000 IN. ZMRP = 375.0000 IN. ZO
SCALE = .0100

PARAMETRIC DATA

DLT-Y = .000 ALPHA = -5.000
BETA = .000 DLTALF = -15.000
DLTBTA = .000 MACH = 7.990
AILRON = .000 ELEVON = .000
GRID = 8.000 PO = 300.000

RUN NO. 950/ 0 GRADIENT INTERVAL = -5.00/ 5.00

DLT-X	DLT-Z	CN	CA	CLM	CY	CYN	CBL	XCP/L	CPB1	CPB2	CPBC
.552	502.270	.15924	.08828	-.04251	.00433	-.00024	.00220	.92699	-.00496	-.00491	-.00357
.394	600.410	.11622	.07948	-.04335	.00196	-.00019	.00070	1.03300	-.00503	-.00500	-.00358
.446	750.420	-.12023	.08469	-.01575	.00127	.00020	-.00003	.52902	-.00574	-.00573	-.00452
.297	804.100	-.12597	.08568	-.01438	.00131	.00019	-.00006	.54583	-.00584	-.00586	-.00465
	GRADIENT	.00000	.00000	.00000	.00000	.00000	.00000	.00000	.00000	.00000	.00000

RUN NO. 951/ 0 GRADIENT INTERVAL = -5.00/ 5.00

DLT-X	DLT-Z	CN	CA	CLM	CY	CYN	CBL	XCP/L	CPB1	CPB2	CPBC
200.340	496.310	.06839	.07899	-.05551	.00397	-.00033	.00151	1.47160	-.00695	-.00693	-.00617
200.250	600.000	.02950	.07536	-.04009	.00297	-.00024	.00043	2.01890	-.00712	-.00706	-.00619
200.500	747.630	-.12583	.08516	-.01454	.00122	.00021	-.00006	.54445	-.00536	-.00541	-.00336
200.540	800.200	-.12694	.08630	-.01431	.00138	.00021	-.00005	.54727	-.00464	-.00464	-.00269
	GRADIENT	.00000	.00000	.00000	.00000	.00000	.00000	.00000	.00000	.00000	.00000

RUN NO. 952/ 0 GRADIENT INTERVAL = -5.00/ 5.00

DLT-X	DLT-Z	CN	CA	CLM	CY	CYN	CBL	XCP/L	CPB1	CPB2	CPBC
400.430	500.910	-.08211	.07898	-.02629	.00145	.00014	.00002	.33981	-.00189	-.00221	.00057
400.300	600.520	-.12045	.08172	-.01525	.00131	.00019	-.00000	.53344	-.00423	-.00446	-.00246
400.350	750.150	-.12599	.08549	-.01448	.00131	.00020	-.00002	.54496	-.00507	-.00521	-.00399
400.440	800.300	-.12726	.08765	-.01413	.00119	.00020	-.00007	.54894	-.00465	-.00476	-.00334
	GRADIENT	.00000	.00000	.00000	.00000	.00000	.00000	.00000	.00000	.00000	.00000

DATE 25 JUL 75 TABULATED SOURCE DATA - 1A17A

AEDC VA422(IA17) ORB AND ET SEPARATING(ORB DATA) (RTR176) (24 JUL 75)

REFERENCE DATA

SREF = 2890.0000 SQ.FT. XMRP = 1089.8000 IN. XO
LREF = 1290.3000 IN. YMRP = .0000 IN. YO
BREF = 1290.3000 IN. ZMRP = 375.0000 IN. ZO
SCALE = .0100

PARAMETRIC DATA

DLT-Y = .000 ALPHA = -5.000
BETA = .000 DLTALF = -20.000
DLTBTA = .000 MACH = 7.980
AILRON = .000 ELEVON = .000
GRID = 8.000 PO = 300.000

RUN NO. 957/ 0 GRADIENT INTERVAL = -5.00/ 5.00

DLT-X	DLT-Z	CN	CA	CLM	CY	CYN	CBL	XCP/L	CPB1	CPB2	CPBC
.295	803.800	.07894	.08027	-.04364	.00334	-.00034	.00149	1.21280	.00040	.00032	.00078
.427	900.800	-.08355	.08173	-.02424	.00139	.00015	-.00016	.36981	.00075	.00065	.00087
.373	1000.400	-.12564	.08524	-.01443	.00137	.00021	-.00007	.54518	.00123	.00111	.00121
	GRADIENT	.00000	.00000	.00000	.00000	.00000	.00000	.00000	.00000	.00000	.00000

RUN NO. 953/ 0 GRADIENT INTERVAL = -5.00/ 5.00

DLT-X	DLT-Z	CN	CA	CLM	CY	CYN	CBL	XCP/L	CPB1	CPB2	CPBC
200.520	751.320	.11901	.07168	-.05390	.00255	-.00009	.00175	1.11290	.00464	.00419	.00617
200.400	803.580	.07298	.07243	-.04571	.00282	-.00014	.00084	1.28640	.00433	.00393	.00571
200.470	900.420	-.12175	.08331	-.01535	.00126	.00018	-.00002	.53392	.00464	.00424	.00587
200.360	1000.300	-.12572	.08550	-.01436	.00143	.00018	-.00003	.54575	.00588	.00548	.00750
	GRADIENT	.00000	.00000	.00000	.00000	.00000	.00000	.00000	.00000	.00000	.00000

RUN NO. 954/ 0 GRADIENT INTERVAL = -5.00/ 5.00

DLT-X	DLT-Z	CN	CA	CLM	CY	CYN	CBL	XCP/L	CPB1	CPB2	CPBC
400.430	747.760	-.03413	.07392	-.02734	.00293	-.00009	-.00004	-.14089	.00594	.00541	.00847
400.180	800.310	-.02756	.07248	-.02581	.00169	.00006	-.00001	-.27669	.00927	.00835	.01293
400.480	898.500	-.12351	.08365	-.01496	.00115	.00020	-.00014	.53891	.01236	.01132	.01598
400.310	1000.300	-.12704	.08654	-.01418	.00138	.00019	-.00006	.54838	.00964	.00900	.01120
	GRADIENT	.00000	.00000	.00000	.00000	.00000	.00000	.00000	.00000	.00000	.00000

ORIGINAL PAGE IS
OF POOR QUALITY

AEDC VA422(IA17) ORB AND ET SEPARATING(ORB DATA) (RTR177) (24 JUL 75)

REFERENCE DATA

SREF = 2690.0000 SQ.FT. XMRP = 1089.6000 IN. XO
LREF = 1290.3000 IN. YMRP = .0000 IN. YO
BREF = 1290.3000 IN. ZMRP = 375.0000 IN. ZO
SCALE = .0100

PARAMETRIC DATA

DLT-Y = .000 ALPHA = 5.000
BETA = .000 DLTALF = .000
DLTBTA = .000 MACH = 7.980
AILRON = .000 ELEVON = .000
GRID = 24.000 PO = 300.000

RUN NO. 968/ 0 GRADIENT INTERVAL = -5.00/ 5.00

DLT-X	DLT-Z	CN	CA	CLM	CY	CYN	CBL	XCP/L	CPB1	CPB2	CPBC
.494	18.595	.02324	.05985	-.01241	-.00022	-.00052	.00012	1.19390	-.01257	-.01263	-.01193
.551	98.645	.03861	.07427	-.00071	.00051	.00020	.00018	.67842	-.01238	-.01243	-.01169
.559	199.360	.07108	.07259	.00703	.00027	.00025	-.00021	.56109	-.01225	-.01230	-.01155
.518	301.220	.12675	.07712	-.00661	.00076	.00014	-.00033	.71213	-.01219	-.01222	-.01151
.529	401.600	.11342	.06477	-.01580	.00077	.00010	.00007	.79933	-.01213	-.01217	-.01153
.777	498.710	.05056	.06384	-.01121	.00042	.00012	-.00007	.88165	-.01211	-.01214	-.01157
	GRADIENT	.00000	.00000	.00000	.00000	.00000	.00000	.00000	.00000	.00000	.00000

RUN NO. 969/ 0 GRADIENT INTERVAL = -5.00/ 5.00

DLT-X	DLT-Z	CN	CA	CLM	CY	CYN	CBL	XCP/L	CPB1	CPB2	CPBC
200.630	22.589	.04669	.07249	.00266	.00078	.00032	.00017	.60294	-.01389	-.01402	-.01347
200.510	100.220	.05903	.06989	.00814	.00094	.00029	.00001	.52207	-.01418	-.01429	-.01375
200.620	200.500	.10650	.07653	.00034	.00047	.00022	-.00029	.65680	-.01425	-.01435	-.01376
200.580	299.820	.13999	.06916	-.01427	.00159	-.00002	.00009	.76191	-.01422	-.01429	-.01364
200.580	397.870	.07069	.06395	-.01352	.00047	.00012	.00004	.85132	-.01424	-.01428	-.01361
200.580	499.340	.03540	.06512	-.00859	.00062	.00014	-.00008	.90268	-.01421	-.01423	-.01351
	GRADIENT	.00000	.00000	.00000	.00000	.00000	.00000	.00000	.00000	.00000	.00000

AEDC VA422(IA17) ORB AND ET SEPARATING(ORB DATA) (RTR178) (24 JUL 75)

REFERENCE DATA

SREF = 2690.0000 SQ.FT. XMRP = 1089.6000 IN. XO
LREF = 1290.3000 IN. YMRP = .0000 IN. YO
BREF = 1290.3000 IN. ZMRP = 375.0000 IN. ZO
SCALE = .0100

PARAMETRIC DATA

DLT-Y = .000 ALPHA = 5.000
BETA = .000 DLTALF = -5.000
DLTBTA = .000 MACH = 7.980
AILRON = .000 ELEVON = .000
GRID = 24.000 PO = 300.000

RUN NO. 972/ 0 GRADIENT INTERVAL = -5.00/ 5.00

DLT-X	DLT-Z	CN	CA	CLM	CY	CYN	CBL	XCP/L	CPB1	CPB2	CPBC
.472	201.540	.15878	.07179	.00388	.00159	.00066	.00057	.63555	-.01371	-.01369	-.01243
.504	300.210	.12087	.07625	.00185	.00058	.00029	-.00050	.64473	-.01366	-.01366	-.01236
.468	402.200	.15846	.07352	-.01466	.00193	-.00019	.00004	.75252	-.01364	-.01364	-.01231
.524	501.110	.08867	.06350	-.01534	.00076	.00009	.00013	.83302	-.01373	-.01372	-.01243
-.308	600.440	.03919	.06437	-.00944	.00046	.00014	-.00009	.90082	-.01381	-.01380	-.01253
	GRADIENT	.00000	.00000	.00000	.00000	.00000	.00000	.00000	.00000	.00000	.00000

RUN NO. 973/ 0 GRADIENT INTERVAL = -5.00/ 5.00

DLT-X	DLT-Z	CN	CA	CLM	CY	CYN	CBL	XCP/L	CPB1	CPB2	CPBC
200.400	199.720	.18663	.06864	-.00937	.00065	.00028	.00020	.71018	-.01416	-.01418	-.01320
200.590	299.030	.15453	.07761	-.00845	.00164	-.00006	-.00049	.71466	-.01422	-.01423	-.01322
200.540	398.260	.12004	.06476	-.01711	.00098	.00004	.00064	.80257	-.01420	-.01418	-.01315
200.500	498.370	.05221	.06357	-.01195	.00056	.00010	-.00007	.88897	-.01422	-.01419	-.01315
200.460	599.750	.03186	.06518	-.00750	.00030	.00013	-.00010	.89545	-.01416	-.01412	-.01303
	GRADIENT	.00000	.00000	.00000	.00000	.00000	.00000	.00000	.00000	.00000	.00000

AEDC VA422(IA17) ORB AND ET SEPARATING(ORB DATA) (RTR179) (24 JUL 75)

REFERENCE DATA

SREF = 2690.0000 SQ.FT. XMRP = 1089.6000 IN. XO
LREF = 1290.3000 IN. YMRP = .0000 IN. YO
BREF = 1290.3000 IN. ZMRP = 375.0000 IN. ZO
SCALE = .0100

PARAMETRIC DATA

DLT-Y = .000 ALPHA = 5.000
BETA = .000 DLTALF = -10.000
DLTBTA = .000 MACH = 7.980
AILRON = .000 ELEVON = .000
GRID = 24.000 PO = 300.000

RUN NO. 974/ 0 GRADIENT INTERVAL = -5.00/ 5.00

DLT-X	DLT-Z	CN	CA	CLM	CY	CYN	CBL	XCP/L	CPB1	CPB2	CPBC
.592	401.640	.18272	.07757	-.00863	.00102	.00013	-.00044	.70726	-.01257	-.01264	-.01124
.453	502.380	.15908	.06439	-.02057	.00097	.00008	.00042	.78929	-.01263	-.01268	-.01128
-.874	603.040	.06625	.06205	-.01371	.00047	.00013	.00005	.86699	-.01274	-.01278	-.01143
	GRADIENT	.00000	.00000	.00000	.00000	.00000	.00000	.00000	.00000	.00000	.00000

ORIGINAL PAGE IS OF POOR QUALITY

AEDC VA422(IA17) ORB AND ET SEPARATING(ORB DATA) (RTR179) (24 JUL 75)

REFERENCE DATA

SREF = 2690.0000 SQ.FT. XMRP = 1089.6000 IN. XO
LREF = 1290.3000 IN. YMRP = .0000 IN. YO
BREF = 1290.3000 IN. ZMRP = 375.0000 IN. ZO
SCALE = .0100

PARAMETRIC DATA

DLT-Y = .000 ALPHA = 5.000
BETA = .000 DLTALF = -10.000
DLTBTA = .000 MACH = 7.980
AILRON = .000 ELEVON = .000
GRID = 24.000 PO = 300.000

RUN NO. 975/ 0 GRADIENT INTERVAL = -5.00/ 5.00

DLT-X	DLT-Z	CN	CA	CLM	CY	CYN	CBL	XCP/L	CPB1	CPB2	CPBC
200.330	399.730	.19430	.07061	-.01833	.00215	-.00011	-.00011	.75432	-.01265	-.01265	-.01137
200.540	497.180	.10121	.06237	-.01744	.00082	.00011	.00024	.83232	-.01261	-.01258	-.01127
200.530	598.820	.04099	.06358	-.01003	.00044	.00014	-.00006	.90473	-.01255	-.01251	-.01121
	GRADIENT	.00000	.00000	.00000	.00000	.00000	.00000	.00000	.00000	.00000	.00000

RUN NO. 976/ 0 GRADIENT INTERVAL = -5.00/ 5.00

DLT-X	DLT-Z	CN	CA	CLM	CY	CYN	CBL	XCP/L	CPB1	CPB2	CPBC
400.360	401.760	.13268	.06273	-.02004	.00111	.00005	.00069	.81105	-.01193	-.01202	-.01042
400.460	500.360	.05534	.06217	-.01263	.00048	.00010	-.00002	.88823	-.01207	-.01213	-.01054
400.500	600.000	.03254	.06405	-.00735	.00035	.00016	-.00007	.88572	-.01238	-.01237	-.01088
	GRADIENT	.00000	.00000	.00000	.00000	.00000	.00000	.00000	.00000	.00000	.00000

AEDC VA422(IA17) ORB AND ET SEPARATING(ORB DATA) (RTR180) (24 JUL 75)

REFERENCE DATA

SREF = 2690.0000 SQ.FT. XMRP = 1089.6000 IN. XO
LREF = 1290.3000 IN. YMRP = .0000 IN. YO
BREF = 1290.3000 IN. ZMRP = 375.0000 IN. ZO
SCALE = .0100

PARAMETRIC DATA

DLT-Y = .000 ALPHA = 5.000
BETA = .000 DLTALF = -15.000
DLTBTA = .000 MACH = 7.980
AILRON = .000 ELEVON = .000
GRID = 24.000 PO = 300.000

RUN NO. 980/ 0 GRADIENT INTERVAL = -5.00/ 5.00

DLT-X	DLT-Z	CN	CA	CLM	CY	CYN	CBL	XCP/L	CPB1	CPB2	CPBC
.560	504.300	.30874	.07795	-.02977	.00282	-.00030	.00088	.75707	-.00954	-.01004	-.00799
.524	602.780	.16468	.06074	-.02622	.00113	.00001	.00070	.81922	-.00988	-.01039	-.00823
.488	750.180	.03898	.06163	-.00914	.00022	.00012	-.00006	.89436	-.01074	-.01109	-.00923
-.853	804.710	.03339	.06339	-.00727	.00026	.00014	-.00007	.87777	-.01105	-.01136	-.00959
	GRADIENT	.00000	.00000	.00000	.00000	.00000	.00000	.00000	.00000	.00000	.00000

AEDC VA422(IA17) ORB AND ET SEPARATING(ORB DATA) (RTR180) (24 JUL 75)

REFERENCE DATA

SREF = 2690.0000 SQ.FT. XMRP = 1089.6000 IN. XO
LREF = 1290.3000 IN. YMRP = .0000 IN. YO
BREF = 1290.3000 IN. ZMRP = 375.0000 IN. ZO
SCALE = .0100

PARAMETRIC DATA

DLT-Y = .000 ALPHA = 5.000
BETA = .000 DLTALF = -15.000
DLTBTA = .000 MACH = 7.980
AILRON = .000 ELEVON = .000
GRID = 24.000 PO = 300.000

RUN NO. 981/ 0 GRADIENT INTERVAL = -5.00/ 5.00

DLT-X	DLT-Z	CN	CA	CLM	CY	CYN	CBL	XCP/L	CPB1	CPB2	CPBC
200.510	500.410	.26934	.06014	-.04558	.00170	-.00006	.00054	.82924	-.01094	-.01109	-.00985
200.470	597.230	.09156	.06086	-.01686	.00056	.00011	-.00003	.84418	-.01100	-.01112	-.00988
200.430	749.210	.03295	.06392	-.00735	.00032	.00013	-.00008	.88293	-.01062	-.01078	-.00920
200.530	800.010	.03340	.06467	-.00740	.00031	.00013	-.00007	.88165	-.01035	-.01055	-.00890
	GRADIENT	.00000	.00000	.00000	.00000	.00000	.00000	.00000	.00000	.00000	.00000

RUN NO. 982/ 0 GRADIENT INTERVAL = -5.00/ 5.00

DLT-X	DLT-Z	CN	CA	CLM	CY	CYN	CBL	XCP/L	CPB1	CPB2	CPBC
400.420	501.550	.11845	.05798	-.02002	.00073	.00010	.00038	.82906	-.00584	-.00591	-.00388
400.410	600.270	.04486	.06129	-.01077	.00031	.00010	-.00005	.90002	-.00597	-.00601	-.00381
400.450	750.020	.03151	.06134	-.00703	.00007	.00016	-.00006	.88314	-.00811	-.00824	-.00572
400.480	800.030	.03088	.06079	-.00694	.00021	.00014	-.00005	.88467	-.00971	-.00982	-.00780
	GRADIENT	.00000	.00000	.00000	.00000	.00000	.00000	.00000	.00000	.00000	.00000

ORIGINAL PAGE IS OF POOR QUALITY

AEDC VA422(IA17) ORB AND ET SEPARATING(ORB DATA) (RTR182) (24 JUL 75)

REFERENCE DATA

SREF = 2690.0000 SQ.FT. XMRP = 1089.6000 IN. XO
LREF = 1290.3000 IN. YMRP = .0000 IN. YO
BREF = 1290.3000 IN. ZMRP = 375.0000 IN. ZO
SCALE = .0100

PARAMETRIC DATA

DLT-Y = .000 ALPHA = 5.000
BETA = .000 DLTALF = -20.000
DLTBTA = .000 MACH = 7.980
AILRON = .000 ELEVON = .000
GRID = 24.000 PO = 300.000

RUN NO. 987/ 0 GRADIENT INTERVAL = -5.00/ 5.00

DLT-X	DLT-Z	CN	CA	CLM	CY	CYN	CBL	XCP/L	CPB1	CPB2	CPBC
.531	801.010	.10401	.05790	-.02387	.00095	-.00005	.00016	.88948	.00040	.00136	.00290
.374	900.180	.03369	.08117	-.00706	.00023	.00013	-.00007	.86947	-.00013	.00094	.00258
.524	1000.300	.03282	.06143	-.00689	.00024	.00015	-.00006	.86992	-.00098	.00004	.00171
	GRADIENT	.00000	.00000	.00000	.00000	.00000	.00000	.00000	.00000	.00000	.00000

AEDC VA422(IA17) ORB AND ET SEPARATING(ORB DATA) (RTR182) (24 JUL 75)

REFERENCE DATA

SREF = 2690.0000 SQ.FT. XMRP = 1089.6000 IN. XO
LREF = 1290.3000 IN. YMRP = .0000 IN. YO
BREF = 1290.3000 IN. ZMRP = 375.0000 IN. ZO
SCALE = .0100

PARAMETRIC DATA

DLT-Y = .000 ALPHA = 5.000
BETA = .000 DLTALF = -20.000
DLTBTA = .000 MACH = 7.980
AILRON = .000 ELEVON = .000
GRID = 24.000 PO = 300.000

RUN NO. 963/ 0 GRADIENT INTERVAL = -5.00/ 5.00

DLT-X	DLT-Z	CN	CA	CLM	CY	CYN	CBL	XCP/L	CPB1	CPB2	CPBC
200.410	750.350	.05178	.05994	-.01285	.00045	.00010	-.00002	.90448	.00003	.00059	.00219
200.410	800.210	.03391	.06091	-.00741	.00020	.00017	-.00008	.87863	-.00022	.00037	.00218
200.490	900.260	.03235	.06116	-.00699	.00022	.00017	-.00006	.87601	-.00065	-.00012	.00189
200.420	1000.200	.03195	.06106	-.00698	.00004	.00015	-.00005	.87841	-.00127	-.00093	.00131
	GRADIENT	.00000	.00000	.00000	.00000	.00000	.00000	.00000	.00000	.00000	.00000

RUN NO. 984/ 0 GRADIENT INTERVAL = -5.00/ 5.00

DLT-X	DLT-Z	CN	CA	CLM	CY	CYN	CBL	XCP/L	CPB1	CPB2	CPBC
400.540	750.160	.03312	.06077	-.00699	.00015	.00012	-.00006	.87091	-.00061	-.00022	.00102
400.520	800.210	.03319	.06088	-.00698	.00018	.00013	-.00006	.87016	-.00029	.00004	.00138
400.450	900.220	.03254	.06058	-.00691	.00013	.00017	-.00004	.87227	.00010	.00045	.00179
400.530	1000.300	.03170	.06029	-.00684	.00023	.00015	-.00006	.87583	.00063	.00113	.00250
	GRADIENT	.00000	.00000	.00000	.00000	.00000	.00000	.00000	.00000	.00000	.00000

AEDC VA422(IA17) ORB AND ET SEPARATING(ORB DATA) (RTR201) (24 JUL 75)

REFERENCE DATA

SREF = 2690.0000 SQ.FT. XMRP = 1089.6000 IN. XO
LREF = 1290.3000 IN. YMRP = .0000 IN. YO
BREF = 1290.3000 IN. ZMRP = 375.0000 IN. ZO
SCALE = .0100

PARAMETRIC DATA

DLT-Y = 60.000 ALPHA = .000
BETA = .000 DLTALF = .000
DLTBTA = .000 MACH = 5.930
AILRON = .000 ELEVON = .000
GRID = 1.000

RUN NO. 61/ 0 GRADIENT INTERVAL = -5.00/ 5.00

DLT-X	DLT-Z	CN	CA	CLM	CY	CYN	CBL	XCP/L	CPB1	CPB2	CPBC
.462	17.363	-.01756	.08309	-.01249	-.00045	.00071	.00124	-.05099	-.03974	-.03981	-.03964
.448	101.480	-.00764	.08871	-.00254	.00471	.00268	-.00045	.32722	-.03973	-.03981	-.03963
.508	200.690	.01848	.08267	-.00208	.00458	.00040	-.00160	.78612	-.03972	-.03981	-.03962
.523	299.570	.03349	.08032	-.01409	.00583	-.00096	.00084	1.08070	-.03973	-.03981	-.03961
.562	398.180	-.00901	.07433	-.01680	.00094	.00006	.00113	-1.20480	-.03974	-.03982	-.03962
.607	499.360	-.04395	.07451	-.01289	.00035	.00016	-.00009	.36674	-.03972	-.03979	-.03959
.621	600.100	-.04901	.07554	-.01137	.00029	.00018	-.00013	.42813	-.03970	-.03979	-.03958
	GRADIENT	.00000	.00000	.00000	.00000	.00000	.00000	.00000	.00000	.00000	.00000

AEDC VA422(IA17) ORB AND ET SEPARATING(ORB DATA) (RTR201) (24 JUL 75)

REFERENCE DATA

SREF = 2690.0000 SQ.FT. XMRP = 1089.6000 IN. XO
LREF = 1290.3000 IN. YMRP = .0000 IN. YO
BREF = 1290.3000 IN. ZMRP = 375.0000 IN. ZO
SCALE = .0100

PARAMETRIC DATA

DLT-Y = 60.000 ALPHA = .000
BETA = .000 DLTALF = .000
DLTBTA = .000 MACH = 5.930
AILRON = .000 ELEVON = .000
GRID = 1.000

RUN NO. 60/ 0 GRADIENT INTERVAL = -5.00/ 5.00

DLT-X	DLT-Z	CN	CA	CLM	CY	CYN	CBL	XCP/L	CPB1	CPB2	CPBC
200.450	20.354	.00147	.08955	.00236	.00567	.00317	-.00056	.00000	-.03980	-.03988	-.03968
200.560	100.660	.01050	.08109	.00214	.00469	.00155	-.00142	.45649	-.03979	-.03987	-.03968
200.500	201.470	.03657	.08339	-.00863	.00411	-.00009	-.00077	.89603	-.03981	-.03989	-.03969
200.650	302.010	.02294	.07595	-.01697	.00213	-.00012	.00312	1.39970	-.03982	-.03990	-.03972
200.610	400.290	-.03098	.07386	-.01531	.00071	.00012	.00014	.16587	-.03980	-.03988	-.03970
200.430	500.070	-.04878	.07445	-.01147	.00035	.00018	-.00013	.42486	-.03979	-.03989	-.03969
200.490	600.040	-.04898	.07558	-.01139	.00028	.00018	-.00013	.42751	-.03981	-.03989	-.03969
	GRADIENT	.00000	.00000	.00000	.00000	.00000	.00000	.00000	.00000	.00000	.00000

RUN NO. 59/ 0 GRADIENT INTERVAL = -5.00/ 5.00

DLT-X	DLT-Z	CN	CA	CLM	CY	CYN	CBL	XCP/L	CPB1	CPB2	CPBC
400.460	19.632	.04005	.08172	.00722	.00794	.00186	-.00047	.47964	-.03981	-.03987	-.03969
400.510	97.863	.02967	.08223	-.00177	.00474	.00030	-.00085	.71970	-.03981	-.03987	-.03970
400.650	198.730	.04107	.07999	-.01449	.00669	-.00097	.00233	1.01290	-.03979	-.03985	-.03968
400.410	297.980	-.00449	.07410	-.01749	.00119	.00006	.00119	-3.23360	-.03978	-.03985	-.03967
400.620	399.120	-.04374	.07430	-.01297	.00046	.00018	-.00007	.36353	-.03979	-.03985	-.03967
400.580	500.220	-.04888	.07541	-.01138	.00031	.00018	-.00013	.42719	-.03982	-.03989	-.03972
400.600	600.210	-.04902	.07559	-.01139	.00023	.00018	-.00013	.42760	-.03985	-.03991	-.03973
	GRADIENT	.00000	.00000	.00000	.00000	.00000	.00000	.00000	.00000	.00000	.00000

ORIGINAL PAGE IS OF POOR QUALITY

AEDC VA422(IA17) ORB AND ET SEPARATING(ORB DATA) (RTR202) (24 JUL 75)

REFERENCE DATA

SREF = 2690.0000 SQ.FT. XMRP = 1089.6000 IN. XO
LREF = 1290.3000 IN. YMRP = .0000 IN. YO
BREF = 1290.3000 IN. ZMRP = 375.0000 IN. ZO
SCALE = .0100

PARAMETRIC DATA

DLT-Y = 60.000 ALPHA = .000
BETA = .000 DLTALF = -10.000
DLTBTA = .000 MACH = 5.930
AILRON = .000 ELEVON = .000
GRID = 1.000

RUN NO. 69/ 0 GRADIENT INTERVAL = -5.00/ 5.00

DLT-X	DLT-Z	CN	CA	CLM	CY	CYN	CBL	XCP/L	CPB1	CPB2	CPBC
.460	402.090	.14138	.08069	-.02875	.00915	-.00132	.00268	.86333	-.02293	-.02280	-.02145
.552	496.940	.03476	.07446	-.02194	.00255	-.00005	.00287	1.29110	-.02299	-.02288	-.02164
.625	598.500	-.03266	.07420	-.01566	.00122	.00017	.00003	.18053	-.02310	-.02298	-.02175
.471	800.170	-.04870	.07637	-.01130	.00091	.00023	-.00009	.42801	-.02303	-.02288	-.02163
	GRADIENT	.00000	.00000	.00000	.00000	.00000	.00000	.00000	.00000	.00000	.00000

RUN NO. 68/ 0 GRADIENT INTERVAL = -5.00/ 5.00

DLT-X	DLT-Z	CN	CA	CLM	CY	CYN	CBL	XCP/L	CPB1	CPB2	CPBC
200.470	403.090	.08445	.07407	-.02613	.00466	-.00043	.00520	.96944	-.02449	-.02423	-.02320
200.390	500.650	-.01112	.07296	-.01905	.00167	.00011	.00052	-1.05220	-.02470	-.02442	-.02349
200.400	600.020	-.04733	.07417	-.01184	.00094	.00023	-.00008	.40993	-.02487	-.02462	-.02385
200.480	800.140	-.04911	.07630	-.01128	.00086	.00023	-.00009	.43029	-.02397	-.02373	-.02289
	GRADIENT	.00000	.00000	.00000	.00000	.00000	.00000	.00000	.00000	.00000	.00000

RUN NO. 67/ 0 GRADIENT INTERVAL = -5.00/ 5.00

DLT-X	DLT-Z	CN	CA	CLM	CY	CYN	CBL	XCP/L	CPB1	CPB2	CPBC
400.530	400.360	.02488	.07245	-.02226	.00240	-.00001	.00213	1.55480	-.02343	-.02322	-.02168
400.490	498.490	-.03759	.07416	-.01457	.00111	.00018	.00001	.27252	-.02277	-.02262	-.02103
400.490	600.260	-.04887	.07396	-.01128	.00096	.00024	-.00009	.42923	-.02268	-.02252	-.02104
400.570	800.310	-.04884	.07627	-.01128	.00092	.00023	-.00009	.42896	-.02248	-.02230	-.02105
	GRADIENT	.00000	.00000	.00000	.00000	.00000	.00000	.00000	.00000	.00000	.00000

AEDC VA422(IA17) ORB AND ET SEPARATING(ORB DATA) (RTR203) (24 JUL 75)

REFERENCE DATA

SREF = 2690.0000 SQ.FT. XMRP = 1089.6000 IN. XO
LREF = 1290.3000 IN. YMRP = .0000 IN. YO
BREF = 1290.3000 IN. ZMRP = 375.0000 IN. ZO
SCALE = .0100

PARAMETRIC DATA

DLT-Y = 60.000 ALPHA = .000
BETA = .000 DLTALF = -20.000
DLTBTA = .000 MACH = 5.930
AILRON = .000 ELEVON = .000
GRID = 1.000

RUN NO. 78/ 0 GRADIENT INTERVAL = -5.00/ 5.00

DLT-X	DLT-Z	CN	CA	CLM	CY	CYN	CBL	XCP/L	CPB1	CPB2	CPBC
.395	801.810	.06429	.06753	-.03653	.00413	-.00045	.00189	1.22830	-.01533	-.01540	-.01433
.446	998.650	-.04855	.07416	-.01134	.00094	.00022	-.00008	.42641	-.01534	-.01542	-.01414
	GRADIENT	.00000	.00000	.00000	.00000	.00000	.00000	.00000	.00000	.00000	.00000

RUN NO. 77/ 0 GRADIENT INTERVAL = -5.00/ 5.00

DLT-X	DLT-Z	CN	CA	CLM	CY	CYN	CBL	XCP/L	CPB1	CPB2	CPBC
200.490	800.510	-.03225	.07108	-.01655	.00128	.00019	.00020	.14678	-.01614	-.01607	-.01511
200.460	1000.400	-.04844	.07524	-.01130	.00091	.00021	-.00009	.42674	-.01606	-.01601	-.01534
	GRADIENT	.00000	.00000	.00000	.00000	.00000	.00000	.00000	.00000	.00000	.00000

RUN NO. 76/ 0 GRADIENT INTERVAL = -5.00/ 5.00

DLT-X	DLT-Z	CN	CA	CLM	CY	CYN	CBL	XCP/L	CPB1	CPB2	CPBC
400.490	800.380	-.04842	.07315	-.01135	.00089	.00023	-.00009	.42565	-.01431	-.01446	-.01299
400.470	1000.300	-.04840	.07522	-.01132	.00106	.00023	-.00008	.42619	-.01352	-.01366	-.01251
	GRADIENT	.00000	.00000	.00000	.00000	.00000	.00000	.00000	.00000	.00000	.00000

AEDC VA422(IA17) ORB AND ET SEPARATING(ORB DATA) (RTR205) (24 JUL 75)

REFERENCE DATA

SREF = 2690.0000 SQ.FT. XMRP = 1089.6000 IN. XO
LREF = 1290.3000 IN. YMRP = .0000 IN. YO
BREF = 1290.3000 IN. ZMRP = 375.0000 IN. ZO
SCALE = .0100

PARAMETRIC DATA

DLT-Y = 60.000 ALPHA = .000
BETA = .000 DLTALF = -20.000
DLTBTA = .000 MACH = 5.930
AILRON = .000 ELEVON = .000
GRID = 26.000

RUN NO. 382/ 0 GRADIENT INTERVAL = -5.00/ 5.00

DLT-X	DLT-Z	CN	CA	CLM	CY	CYN	CBL	XCP/L	CPB1	CPB2	CPBC
.431	800.170	.06499	.06752	-.03680	.00428	-.00044	.00184	1.22630	-.01882	-.01936	-.01731
.487	898.880	-.03335	.07124	-.01662	.00128	.00022	.00016	.16158	-.01872	-.01924	-.01716
.449	1000.100	-.04886	.07392	-.01145	.00111	.00022	-.00010	.42567	-.01776	-.01829	-.01604
	GRADIENT	.00000	.00000	.00000	.00000	.00000	.00000	.00000	.00000	.00000	.00000

AEDC VA422(IA17) ORB AND ET SEPARATING(ORB DATA) (RTR205) (24 JUL 75)

REFERENCE DATA

SREF = 2690.0000 SQ.FT. XMRP = 1089.6000 IN. XO
LREF = 1290.3000 IN. YMRP = .0000 IN. YO
BREF = 1290.3000 IN. ZMRP = 375.0000 IN. ZO
SCALE = .0160

PARAMETRIC DATA

DLT-Y = 60.000 ALPHA = .000
BETA = .000 DLTALF = -20.000
DLTBTA = .000 MACH = 5.930
AILRON = .000 ELEVON = .000
GRID = 26.000

RUN NO. 375/ 0 GRADIENT INTERVAL = -5.00/ 5.00

DLT-X	DLT-Z	CN	CA	CLM	CY	CYN	CBL	XCP/L	CPB1	CPB2	CPBC
200.530	751.030	.03133	.06381	-.03350	.00327	-.00023	.00086	1.72920	-.01318	-.01306	-.01160
200.430	799.860	-.03093	.06952	-.01705	.00169	.00021	.00020	.10863	-.01306	-.01298	-.01164
200.380	900.300	-.04840	.07234	-.01136	.00136	.00026	-.00010	.42522	-.01301	-.01296	-.01167
200.460	1000.200	-.04833	.07381	-.01134	.00132	.00025	-.00010	.42540	-.01310	-.01303	-.01190
	GRADIENT	.00000	.00000	.00000	.00000	.00000	.00000	.00000	.00000	.00000	.00000

RUN NO. 374/ 0 GRADIENT INTERVAL = -5.00/ 5.00

DLT-X	DLT-Z	CN	CA	CLM	CY	CYN	CBL	XCP/L	CPB1	CPB2	CPBC
400.500	750.270	-.04817	.07106	-.01136	.00137	.00026	-.00010	.42415	-.01645	-.01633	-.01488
400.470	800.330	-.04838	.07154	-.01135	.00127	.00026	-.00010	.42545	-.01772	-.01753	-.01637
400.510	900.500	-.04852	.07293	-.01133	.00127	.00025	-.00010	.42658	-.01775	-.01757	-.01663
400.350	1000.200	-.04828	.07537	-.01135	.00122	.00024	-.00010	.42495	-.01634	-.01618	-.01500
	GRADIENT	.00000	.00000	.00000	.00000	.00000	.00000	.00000	.00000	.00000	.00000

AEDC VA422(IA17) ORB AND ET SEPARATING(ORB DATA) (RTR206) (24 JUL 75)

REFERENCE DATA

SREF = 2690.0000 SQ.FT. XMRP = 1089.6000 IN. XO
LREF = 1290.3000 IN. YMRP = .0000 IN. YO
BREF = 1290.3000 IN. ZMRP = 375.0000 IN. ZO
SCALE = .0100

PARAMETRIC DATA

DLT-Y = 60.000 ALPHA = .000
BETA = .000 DLTALF = .000
DLTBTA = 3.000 MACH = 5.930
AILRON = .000 ELEVON = .000
GRID = 1.000

RUN NO. 91/ 0 GRADIENT INTERVAL = -5.00/ 5.00

DLT-X	DLT-Z	CN	CA	CLM	CY	CYN	CBL	XCP/L	CPB1	CPB2	CPBC
.533	18.952	-.01349	.08367	-.01177	-.00256	.00011	-.00118	-.21217	-.02730	-.02693	-.02623
.520	99.531	-.00575	.09035	-.00208	.00157	.00175	-.00108	.29737	-.02727	-.02695	-.02624
.568	200.670	.01907	.08577	-.00164	.00225	.00052	-.00167	.74575	-.02729	-.02700	-.02634
.580	302.250	.03909	.08240	-.01422	.00365	-.00039	-.00025	1.02390	-.02725	-.02695	-.02631
.591	400.940	-.00849	.07803	-.01655	.00143	.00015	.00046	-1.28990	-.02720	-.02690	-.02629
.627	500.100	-.04317	.07620	-.01287	.00118	.00018	-.00006	.36182	-.02718	-.02690	-.02632
.640	600.090	-.04852	.07718	-.01126	.00115	.00020	-.00008	.42791	-.02707	-.02678	-.02622
	GRADIENT	.00000	.00000	.00000	.00000	.00000	.00000	.00000	.00000	.00000	.00000

AEDC VA422(IA17) ORB AND ET SEPARATING(ORB DATA) (RTR206) (24 JUL 75)

REFERENCE DATA

SREF = 2690.0000 SQ.FT. XMRP = 1089.6000 IN. XO
LREF = 1290.3000 IN. YMRP = .0000 IN. YO
BREF = 1290.3000 IN. ZMRP = 375.0000 IN. ZO
SCALE = .0100

PARAMETRIC DATA

DLT-Y = 60.000 ALPHA = .000
BETA = .000 DLTALF = .000
DLTBTA = 3.000 MACH = 5.930
AILRON = .000 ELEVON = .000
GRID = 1.000

RUN NO. 92/ 0 GRADIENT INTERVAL = -5.00/ 5.00

DLT-X	DLT-Z	CN	CA	CLM	CY	CYN	CBL	XCP/L	CPB1	CPB2	CPBC
200.560	23.025	.00733	.09174	.00298	.00291	.00209	-.00128	.25297	-.02808	-.02788	-.02717
200.550	99.612	.01149	.08395	.00259	.00193	.00111	-.00172	.43458	-.02834	-.02786	-.02744
200.500	199.590	.03936	.08518	-.00794	.00243	.00022	-.00070	.86173	-.02824	-.02783	-.02715
200.650	298.650	.02350	.07739	-.01663	.00195	.00009	.00139	1.36760	-.02805	-.02760	-.02692
200.530	398.200	-.02957	.07556	-.01534	.00136	.00018	.00004	.14119	-.02799	-.02753	-.02684
200.580	499.910	-.04851	.07596	-.01134	.00109	.00019	-.00008	.42620	-.02792	-.02748	-.02676
200.570	600.150	-.04876	.07716	-.01121	.00109	.00018	-.00008	.43001	-.02766	-.02723	-.02643
	GRADIENT	.00000	.00000	.00000	.00000	.00000	.00000	.00000	.00000	.00000	.00000

AEDC VA422(IA17) ORB AND ET SEPARATING(ORB DATA) (RTR207) (24 JUL 75)

REFERENCE DATA

SREF = 2690.0000 SQ.FT. XMRP = 1089.6000 IN. XO
LREF = 1290.3000 IN. YMRP = .0000 IN. YO
BREF = 1290.3000 IN. ZMRP = 375.0000 IN. ZO
SCALE = .0100

PARAMETRIC DATA

DLT-Y = 60.000 ALPHA = .000
BETA = .000 DLTALF = -10.000
DLTBTA = 3.000 MACH = 5.930
AILRON = .000 ELEVON = .000
GRID = 1.000

RUN NO. 85/ 0 GRADIENT INTERVAL = -5.00/ 5.00

DLT-X	DLT-Z	CN	CA	CLM	CY	CYN	CBL	XCP/L	CPB1	CPB2	CPBC
.502	403.750	.15274	.08208	-.03089	.00263	-.00005	-.00073	.86225	-.02222	-.02193	-.02138
.574	501.740	.03126	.07491	-.02167	.00170	.00010	.00104	1.35320	-.02209	-.02176	-.02136
.440	600.100	-.03312	.07506	-.01546	.00110	.00018	-.00005	.19312	-.02182	-.02149	-.02114
-.038	802.120	-.04855	.07740	-.01129	.00094	.00019	-.00009	.42737	-.02070	-.02038	-.02016
	GRADIENT	.00000	.00000	.00000	.00000	.00000	.00000	.00000	.00000	.00000	.00000

RUN NO. 86/ 0 GRADIENT INTERVAL = -5.00/ 5.00

DLT-X	DLT-Z	CN	CA	CLM	CY	CYN	CBL	XCP/L	CPB1	CPB2	CPBC
200.470	398.500	.09438	.07425	-.02787	.00293	-.00014	.00246	.95525	-.02252	-.02234	-.02147
200.470	497.310	-.00554	.07406	-.01970	.00135	.00014	.00028	-2.89580	-.02180	-.02173	-.02056
200.480	599.620	-.04615	.07630	-.01209	.00100	.00019	-.00007	.39793	-.02157	-.02156	-.02039
200.560	800.350	-.04851	.07755	-.01134	.00093	.00019	-.00008	.42631	-.02146	-.02139	-.02020
	GRADIENT	.00000	.00000	.00000	.00000	.00000	.00000	.00000	.00000	.00000	.00000

AEDC VA422(IA17) ORB AND ET SEPARATING(ORB DATA) (RTR207) (24 JUL 75)

REFERENCE DATA

SREF = 2690.0000 SQ.FT. XMRP = 1089.6000 IN. XO
LREF = 1290.3000 IN. YMRP = .0000 IN. YO
BREF = 1290.3000 IN. ZMRP = 375.0000 IN. ZO
SCALE = .0100

PARAMETRIC DATA

DLT-Y = 60.000 ALPHA = .000
BETA = .000 DLTALF = -10.000
DLTBTA = 3.000 MACH = 5.930
AILRON = .000 ELEVON = .000
GRID = 1.000

RUN NO. 87/ 0 GRADIENT INTERVAL = -5.00/ 5.00

DLT-X	DLT-Z	CN	CA	CLM	CY	CYN	CBL	XCP/L	CPB1	CPB2	CPBC
400.360	401.970	.02610	.07294	-.02226	.00182	.00008	.00112	1.51270	-.02349	-.02330	-.02236
400.420	500.030	-.03618	.07517	-.01484	.00116	.00016	-.00003	.24968	-.02373	-.02354	-.02268
400.380	599.990	-.04872	.07507	-.01128	.00102	.00020	-.00008	.42849	-.02405	-.02389	-.02325
400.450	800.170	-.04868	.07751	-.01131	.00098	.00019	-.00009	.42770	-.02288	-.02276	-.02204
	GRADIENT	.00000	.00000	.00000	.00000	.00000	.00000	.00000	.00000	.00000	.00000

AEDC VA422(IA17) ORB AND ET SEPARATING(ORB DATA) (RTR208) (24 JUL 75)

REFERENCE DATA

SREF = 2690.0000 SQ.FT. XMRP = 1089.6000 IN. XO
LREF = 1290.3000 IN. YMRP = .0000 IN. YO
BREF = 1290.3000 IN. ZMRP = 375.0000 IN. ZO
SCALE = .0100

PARAMETRIC DATA

DLT-Y = 60.000 ALPHA = .000
BETA = .000 DLTALF = -20.000
DLTBTA = 3.000 MACH = 5.930
AILRON = .000 ELEVON = .000
GRID = 1.000

RUN NO. 79/ 0 GRADIENT INTERVAL = -5.00/ 5.00

DLT-X	DLT-Z	CN	CA	CLM	CY	CYN	CBL	XCP/L	CPB1	CPB2	CPBC
.518	802.140	.07090	.06748	-.03749	.00104	.00016	-.00037	1.18880	-.01021	-.01097	-.00896
.469	1000.400	-.04868	.07313	-.01128	.00095	.00022	-.00009	.42833	-.01067	-.01129	-.00911
	GRADIENT	.00000	.00000	.00000	.00000	.00000	.00000	.00000	.00000	.00000	.00000

RUN NO. 80/ 0 GRADIENT INTERVAL = -5.00/ 5.00

DLT-X	DLT-Z	CN	CA	CLM	CY	CYN	CBL	XCP/L	CPB1	CPB2	CPBC
200.460	798.670	-.02825	.07054	-.01797	.00071	.00021	-.00005	.02391	-.01240	-.01300	-.01118
200.430	1000.100	-.04839	.07546	-.01131	.00093	.00021	-.00008	.42622	-.01199	-.01259	-.01079
	GRADIENT	.00000	.00000	.00000	.00000	.00000	.00000	.00000	.00000	.00000	.00000

RUN NO. 81/ 0 GRADIENT INTERVAL = -5.00/ 5.00

DLT-X	DLT-Z	CN	CA	CLM	CY	CYN	CBL	XCP/L	CPB1	CPB2	CPBC
400.450	800.420	-.04839	.07321	-.01134	.00089	.00021	-.00009	.42556	-.01537	-.01548	-.01434
400.470	1000.300	-.04850	.07520	-.01132	.00097	.00020	-.00008	.42668	-.01476	-.01502	-.01401
	GRADIENT	.00000	.00000	.00000	.00000	.00000	.00000	.00000	.00000	.00000	.00000

AEDC VA422(IA17) ORB AND ET SEPARATING(ORB DATA) (RTR210) (24 JUL 75)

REFERENCE DATA

SREF = 2690.0000 SQ.FT. XMRP = 1089.6000 IN. XO
LREF = 1290.3000 IN. YMRP = .0000 IN. YO
BREF = 1290.3000 IN. ZMRP = 375.0000 IN. ZO
SCALE = .0100

PARAMETRIC DATA

DLT-Y = 60.000 ALPHA = .000
BETA = .000 DLTALF = -20.000
DLTBTA = 3.000 MACH = 5.930
AILRON = .000 ELEVON = .000
GRID = 26.000

RUN NO. 383/ 0 GRADIENT INTERVAL = -5.00/ 5.00

DLT-X	DLT-Z	CN	CA	CLM	CY	CYN	CBL	XCP/L	CPB1	CPB2	CPBC
.475	802.090	.07186	.06697	-.03766	.00113	.00017	-.00044	1.18400	-.01298	-.01359	-.01165
.560	900.390	-.03205	.06996	-.01688	.00105	.00022	-.00012	.13331	-.01367	-.01413	-.01213
.466	1000.300	-.04877	.07294	-.01140	.00105	.00022	-.00011	.42626	-.01473	-.01500	-.01316
	GRADIENT	.00000	.00000	.00000	.00000	.00000	.00000	.00000	.00000	.00000	.00000

RUN NO. 376/ 0 GRADIENT INTERVAL = -5.00/ 5.00

DLT-X	DLT-Z	CN	CA	CLM	CY	CYN	CBL	XCP/L	CPB1	CPB2	CPBC
200.400	751.060	.04156	.06285	-.03568	.00120	.00020	-.00003	1.51860	-.01545	-.01564	-.01425
200.540	800.420	-.02877	.06846	-.01772	.00117	.00026	-.00009	.04418	-.01645	-.01642	-.01535
200.590	900.480	-.04840	.07155	-.01134	.00129	.00025	-.00010	.42583	-.01761	-.01745	-.01683
200.530	1000.300	-.04839	.07396	-.01131	.00121	.00024	-.00010	.42618	-.01719	-.01700	-.01654
	GRADIENT	.00000	.00000	.00000	.00000	.00000	.00000	.00000	.00000	.00000	.00000

RUN NO. 377/ 0 GRADIENT INTERVAL = -5.00/ 5.00

DLT-X	DLT-Z	CN	CA	CLM	CY	CYN	CBL	XCP/L	CPB1	CPB2	CPBC
400.500	749.510	-.04817	.07118	-.01144	.00118	.00025	-.00010	.42253	-.01375	-.01399	-.01183
400.440	800.350	-.04824	.07136	-.01140	.00114	.00024	-.00010	.42365	-.01239	-.01257	-.01038
400.450	900.360	-.04829	.07315	-.01134	.00115	.00023	-.00010	.42514	-.01150	-.01165	-.00973
400.440	1000.300	-.04834	.07382	-.01136	.00113	.00024	-.00010	.42491	-.01214	-.01220	-.01077
	GRADIENT	.00000	.00000	.00000	.00000	.00000	.00000	.00000	.00000	.00000	.00000

ORIGINAL PAGE IS OF POOR QUALITY

AEDC VA422(IA17) ORB AND ET SEPARATING(ORB DATA) (RTR211) (24 JUL 75)

REFERENCE DATA

SREF = 2690.0000 SQ.FT. XMRP = 1089.8000 IN. XO
LREF = 1290.3000 IN. YMRP = .0000 IN. YO
BREF = 1290.3000 IN. ZMRP = 375.0000 IN. ZO
SCALE = .0100

PARAMETRIC DATA

DLT-Y = 60.000 ALPHA = .000
BETA = 3.000 DLTALF = .000
DLTBTA = .000 MACH = 5.930
AILRON = .000 ELEVON = .000
GRID = 3.000

RUN NO. 114/ 0 GRADIENT INTERVAL = -5.00/ 5.00

DLT-X	DLT-Z	CN	CA	CLM	CY	CYN	CBL	XCP/L	CPB1	CPB2	CPBC
.554	20.086	-.01541	.08318	-.01195	-.03891	-.00123	-.00011	-.11514	-.02797	-.02787	-.02728
.598	101.560	-.00150	.09045	-.00275	-.03614	.00043	-.00149	.00000	-.02828	-.02816	-.02764
.660	200.540	.01833	.08268	-.00150	-.03347	-.00070	-.00259	.74160	-.02851	-.02838	-.02780
.697	299.330	.02585	.08177	-.01247	-.02816	-.00234	.00054	1.14250	-.02843	-.02834	-.02762
.639	398.370	-.00878	.07691	-.01665	-.03211	-.00179	.00277	-1.23630	-.02831	-.02823	-.02749
.633	499.160	-.04764	.07698	-.01204	-.03333	-.00164	.00015	.40726	-.02825	-.02818	-.02743
.590	600.170	-.05201	.07792	-.01070	-.03387	-.00158	.00004	.45422	-.02811	-.02804	-.02727
	GRADIENT	.00000	.00000	.00000	.00000	.00000	.00000	.00000	.00000	.00000	.00000

RUN NO. 113/ 0 GRADIENT INTERVAL = -5.00/ 5.00

DLT-X	DLT-Z	CN	CA	CLM	CY	CYN	CBL	XCP/L	CPB1	CPB2	CPBC
200.600	20.363	.00968	.09062	.00257	-.03389	.00102	-.00243	.39447	-.02775	-.02768	-.02692
200.550	100.950	.01671	.08142	.00260	-.03357	-.00018	-.00255	.50418	-.02801	-.02796	-.02730
200.550	201.540	.03336	.08387	-.00722	-.03133	-.00146	-.00162	.87633	-.02803	-.02796	-.02733
200.610	301.890	.02142	.07961	-.01682	-.02940	-.00223	.00439	1.44520	-.02813	-.02805	-.02743
200.560	400.390	-.03160	.07619	-.01501	-.03293	-.00171	.00086	.18506	-.02828	-.02819	-.02760
200.620	500.170	-.05180	.07747	-.01084	-.03383	-.00160	.00005	.45075	-.02834	-.02826	-.02769
200.590	600.160	-.05210	.07794	-.01072	-.03382	-.00157	.00004	.45415	-.02829	-.02818	-.02760
	GRADIENT	.00000	.00000	.00000	.00000	.00000	.00000	.00000	.00000	.00000	.00000

AEDC VA422(IA17) ORB AND ET SEPARATING(ORB DATA) (RTR212) (24 JUL 75)

REFERENCE DATA

SREF = 2690.0000 SQ.FT. XMRP = 1089.6000 IN. XO
LREF = 1290.3000 IN. YMRP = .0000 IN. YO
BREF = 1290.3000 IN. ZMRP = 375.0000 IN. ZO
SCALE = .0100

PARAMETRIC DATA

DLT-Y = 60.000 ALPHA = .000
BETA = 3.000 DLTALF = -10.000
DLTBTA = .000 MACH = 5.930
AILRON = .000 ELEVON = .000
GRID = 3.000

RUN NO. 122/ 0 GRADIENT INTERVAL = -5.00/ 5.00

DLT-X	DLT-Z	CN	CA	CLM	CY	CYN	CBL	XCP/L	CPB1	CPB2	CPBC
.462	402.160	.13936	.08125	-.02853	-.02316	-.00304	.00351	.86474	-.02419	-.02435	-.02310
.517	496.980	.03602	.07709	-.02208	-.02972	-.00205	.00565	1.27300	-.02410	-.02421	-.02308
.549	598.330	-.03582	.07679	-.01481	-.03251	-.00172	.00049	.24660	-.02400	-.02411	-.02300
.634	750.010	-.05134	.07881	-.01073	-.03331	-.00155	.00005	.45105	-.02417	-.02423	-.02332
.656	800.140	-.05135	.07884	-.01072	-.03324	-.00154	.00005	.45116	-.02451	-.02457	-.02375
	GRADIENT	.00000	.00000	.00000	.00000	.00000	.00000	.00000	.00000	.00000	.00000

RUN NO. 121/ 0 GRADIENT INTERVAL = -5.00/ 5.00

DLT-X	DLT-Z	CN	CA	CLM	CY	CYN	CBL	XCP/L	CPB1	CPB2	CPBC
200.550	402.990	.07730	.07897	-.02517	-.02553	-.00293	.00640	.98556	-.02630	-.02638	-.02563
200.430	500.740	-.01167	.07561	-.01881	-.03189	-.00179	.00162	-.95157	-.02650	-.02657	-.02595
200.480	600.150	-.05010	.07766	-.01120	-.03322	-.00159	.00009	.43648	-.02656	-.02662	-.02608
200.470	750.120	-.05182	.07878	-.01072	-.03332	-.00154	.00005	.45316	-.02625	-.02632	-.02577
200.480	800.170	-.05173	.07878	-.01071	-.03338	-.00155	.00005	.45300	-.02598	-.02606	-.02548
	GRADIENT	.00000	.00000	.00000	.00000	.00000	.00000	.00000	.00000	.00000	.00000

RUN NO. 120/ 0 GRADIENT INTERVAL = -5.00/ 5.00

DLT-X	DLT-Z	CN	CA	CLM	CY	CYN	CBL	XCP/L	CPB1	CPB2	CPBC
400.530	400.290	.02668	.07522	-.02258	-.03050	-.00192	.00393	1.50620	-.02554	-.02569	-.02463
400.530	498.510	-.03948	.07649	-.01404	-.03280	-.00169	.00034	.30450	-.02487	-.02506	-.02390
400.520	600.220	-.05109	.07827	-.01071	-.03342	-.00155	.00004	.45037	-.02456	-.02472	-.02364
400.530	750.140	-.05135	.07867	-.01071	-.03331	-.00154	.00005	.45148	-.02486	-.02500	-.02416
400.560	800.160	-.05157	.07873	-.01071	-.03335	-.00155	.00005	.45228	-.02516	-.02528	-.02454
	GRADIENT	.00000	.00000	.00000	.00000	.00000	.00000	.00000	.00000	.00000	.00000

AEDC VA422(IA17) ORB AND ET SEPARATING(ORB DATA) (RTR214) (24 JUL 75)

REFERENCE DATA

SREF = 2890.0000 SQ.FT. XMRP = 1089.6000 IN. XO
LREF = 1290.3000 IN. YMRP = .0000 IN. YO
BREF = 1290.3000 IN. ZMRP = 375.0000 IN. ZO
SCALE = .0100

PARAMETRIC DATA

DLT-Y = 60.000 ALPHA = .000
BETA = 3.000 DLTALF = -20.000
DLTBTA = .000 MACH = 5.930
AILRON = .000 ELEVON = .000
GRID = 3.000

RUN NO. 131/ 0 GRADIENT INTERVAL = -5.00/ 5.00

DLT-X	DLT-Z	CN	CA	CLM	CY	CYN	CBL	XCP/L	CPB1	CPB2	CPBC
.443	800.230	.06416	.07001	-.03629	-.02762	-.00229	.00375	1.22560	-.01964	-.01988	-.01871
.578	898.760	-.03549	.07510	-.01589	-.03215	-.00168	.00053	.21800	-.01943	-.01967	-.01843
.550	1000.200	-.05078	.07853	-.01070	-.03290	-.00156	.00006	.44935	-.01913	-.01938	-.01809
	GRADIENT	.00000	.00000	.00000	.00000	.00000	.00000	.00000	.00000	.00000	.00000

RUN NO. 129/ 0 GRADIENT INTERVAL = -5.00/ 5.00

DLT-X	DLT-Z	CN	CA	CLM	CY	CYN	CBL	XCP/L	CPB1	CPB2	CPBC
200.490	751.250	.03224	.06800	-.03243	-.02932	-.00221	.00163	1.66610	-.01407	-.01457	-.01281
200.550	799.670	-.03129	.07299	-.01684	-.03205	-.00171	.00052	.12184	-.01398	-.01429	-.01268
200.530	900.360	-.05068	.07752	-.01066	-.03300	-.00158	.00005	.44956	-.01380	-.01416	-.01261
200.550	1000.300	-.05054	.07884	-.01068	-.03296	-.00154	.00005	.44864	-.01453	-.01483	-.01368
	GRADIENT	.00000	.00000	.00000	.00000	.00000	.00000	.00000	.00000	.00000	.00000

RUN NO. 128/ 0 GRADIENT INTERVAL = -5.00/ 5.00

DLT-X	DLT-Z	CN	CA	CLM	CY	CYN	CBL	XCP/L	CPB1	CPB2	CPBC
400.390	750.330	-.05093	.07484	-.01062	-.03272	-.00163	.00004	.45160	-.01853	-.01876	-.01793
400.430	800.280	-.05092	.07643	-.01061	-.03298	-.00159	.00005	.45157	-.01898	-.01915	-.01871
400.440	900.360	-.05093	.07826	-.01066	-.03301	-.00156	.00005	.45073	-.01814	-.01834	-.01796
400.420	1000.300	-.05086	.07929	-.01071	-.03308	-.00155	.00005	.44944	-.01669	-.01698	-.01644
	GRADIENT	.00000	.00000	.00000	.00000	.00000	.00000	.00000	.00000	.00000	.00000

AEDC VA422(IA17) ORB AND ET SEPARATING(ORB DATA) (RTR215) (24 JUL 75)

REFERENCE DATA

SREF = 2690.0000 SQ.FT. XMRP = 1089.6000 IN. XO
LREF = 1290.3000 IN. YMRP = .0000 IN. YO
BREF = 1290.3000 IN. ZMRP = 375.0000 IN. ZO
SCALE = .0100

PARAMETRIC DATA

DLT-Y = 60.000 ALPHA = .000
BETA = 3.000 DLTALF = .000
DLTBTA = 3.000 MACH = 5.930
AILRON = .000 ELEVON = .000
GRID = 3.000

RUN NO. 156/ 0 GRADIENT INTERVAL = -5.00/ 5.00

DLT-X	DLT-Z	CN	CA	CLM	CY	CYN	CBL	XCP/L	CPB1	CPB2	CPBC
.647	18.811	-.00778	.08157	-.01282	-.04134	-.00219	-.00299	-.98745	-.02724	-.02731	-.02664
.618	99.381	.00169	.09051	-.00276	-.03998	-.00057	-.00230	.00000	-.02723	-.02729	-.02664
.700	200.830	.02510	.08421	-.00088	-.03682	-.00048	-.00356	.69488	-.02724	-.02729	-.02669
.726	302.140	.03634	.08257	-.01267	-.03005	-.00211	-.00055	1.00860	-.02723	-.02727	-.02667
.640	401.070	-.00494	.07684	-.01659	-.03241	-.00172	.00212	-2.69710	-.02729	-.02734	-.02673
.634	500.180	-.04519	.07685	-.01234	-.03339	-.00166	.00014	.38694	-.02740	-.02741	-.02687
.873	596.970	-.05093	.07789	-.01068	-.03371	-.00159	.00002	.45039	-.02741	-.02742	-.02695
	GRADIENT	.00000	.00000	.00000	.00000	.00000	.00000	.00000	.00000	.00000	.00000

RUN NO. 157/ 0 GRADIENT INTERVAL = -5.00/ 5.00

DLT-X	DLT-Z	CN	CA	CLM	CY	CYN	CBL	XCP/L	CPB1	CPB2	CPBC
200.660	23.085	.01298	.09174	.00204	-.03905	-.00037	-.00312	.50262	-.02804	-.02805	-.02756
200.520	99.783	.01959	.08338	.00298	-.03919	-.00026	-.00338	.50769	-.02836	-.02834	-.02786
200.590	199.350	.03888	.08470	-.00640	-.03431	-.00104	-.00209	.82456	-.02828	-.02827	-.02760
200.630	298.540	.02707	.07879	-.01684	-.03092	-.00190	.00299	1.28210	-.02805	-.02806	-.02733
200.580	398.180	-.02792	.07632	-.01529	-.03299	-.00169	.00075	.11223	-.02798	-.02796	-.02724
200.620	499.790	-.05074	.07757	-.01083	-.03374	-.00161	.00005	.44652	-.02787	-.02788	-.02713
200.660	600.100	-.05132	.07814	-.01065	-.03375	-.00159	.00003	.45242	-.02776	-.02777	-.02701
	GRADIENT	.00000	.00000	.00000	.00000	.00000	.00000	.00000	.00000	.00000	.00000

ORIGINAL PAGE IS OF POOR QUALITY

AEDC VA422(IA17) ORB AND ET SEPARATING(ORB DATA) (RTR216) (24 JUL 75)

REFERENCE DATA

SREF = 2690.0000 SQ.FT. XMRP = 1089.6000 IN. XO
LREF = 1290.3000 IN. YMRP = .0000 IN. YO
BREF = 1290.3000 IN. ZMRP = 375.0000 IN. ZO
SCALE = .0100

PARAMETRIC DATA

DLT-Y = 60.000 ALPHA = .000
BETA = 3.000 DLTALF = -10.000
DLTBTA = 3.000 MACH = 5.930
AILRON = .000 ELEVON = .000
GRID = 3.000

RUN NO. 150/ 0 GRADIENT INTERVAL = -5.00/ 5.00

DLT-X	DLT-Z	CN	CA	CLM	CY	CYN	CBL	XCP/L	CPB1	CPB2	CPBC
.532	403.820	.15258	.08084	-.02926	-.03024	-.00197	-.00107	.85175	-.02751	-.02759	-.02659
.454	502.010	.03574	.07503	-.02202	-.03138	-.00183	.00374	1.27610	-.02801	-.02806	-.02721
.486	600.240	-.03418	.07509	-.01509	-.03319	-.00171	.00037	.21866	-.02832	-.02838	-.02764
.471	750.100	-.05149	.07749	-.01065	-.03389	-.00158	.00002	.45320	-.02846	-.02851	-.02788
.146	801.950	-.05166	.07766	-.01067	-.03396	-.00157	.00002	.45345	-.02848	-.02854	-.02789
	GRADIENT	.00000	.00000	.00000	.00000	.00000	.00000	.00000	.00000	.00000	.00000

RUN NO. 151/ 0 GRADIENT INTERVAL = -5.00/ 5.00

DLT-X	DLT-Z	CN	CA	CLM	CY	CYN	CBL	XCP/L	CPB1	CPB2	CPBC
200.510	398.380	.09394	.07776	-.02684	-.02741	-.00268	.00391	.94569	-.02646	-.02660	-.02537
200.510	497.270	-.00249	.07517	-.01980	-.03271	-.00176	.00150	.00000	-.02530	-.02561	-.02399
200.540	599.410	-.04809	.07671	-.01164	-.03385	-.00162	.00007	.41797	-.02474	-.02507	-.02354
200.550	750.090	-.05097	.07794	-.01073	-.03394	-.00158	.00002	.44948	-.02477	-.02503	-.02373
200.540	800.160	-.05110	.07793	-.01072	-.03396	-.00158	.00002	.45011	-.02506	-.02527	-.02419
	GRADIENT	.00000	.00000	.00000	.00000	.00000	.00000	.00000	.00000	.00000	.00000

RUN NO. 152/ 0 GRADIENT INTERVAL = -5.00/ 5.00

DLT-X	DLT-Z	CN	CA	CLM	CY	CYN	CBL	XCP/L	CPB1	CPB2	CPBC
400.500	402.090	.03123	.07404	-.02290	-.03170	-.00180	.00284	1.39330	-.02647	-.02661	-.02575
400.560	500.180	-.03676	.07526	-.01467	-.03335	-.00172	.00029	.26090	-.02664	-.02677	-.02604
400.450	600.100	-.05120	.07739	-.01069	-.03385	-.00158	.00002	.45130	-.02661	-.02673	-.02604
400.520	750.020	-.05137	.07798	-.01073	-.03385	-.00158	.00003	.45120	-.02615	-.02629	-.02552
400.480	800.130	-.05132	.07798	-.01073	-.03386	-.00158	.00003	.45089	-.02591	-.02607	-.02524
	GRADIENT	.00000	.00000	.00000	.00000	.00000	.00000	.00000	.00000	.00000	.00000

AEDC VA422(1A17) ORB AND ET SEPARATING(ORB DATA) (RTR218) (24 JUL 75)

REFERENCE DATA

SREF = 2690.0000 SQ.FT. XMRP = 1089.8000 IN. XO
LREF = 1290.3000 IN. YMRP = .0000 IN. YO
BREF = 1290.3000 IN. ZMRP = 375.0000 IN. ZO
SCALE = .0100

PARAMETRIC DATA

DLT-Y = 60.000 ALPHA = .000
BETA = 3.000 DLTALF = -20.000
DLTBTA = 3.000 MACH = 5.930
AILRON = .000 ELEVON = .000
GRID = 3.000

RUN NO. 136/ 0 GRADIENT INTERVAL = -5.00/ 5.00

DLT-X	DLT-Z	CN	CA	CLM	CY	CYN	CBL	XCP/L	CPB1	CPB2	CPBC
.529	801.890	.07544	.06934	-.03883	-.03076	-.00156	.00092	1.17460	-.01937	-.01969	-.01874
.506	900.430	-.02787	.07382	-.01811	-.03238	-.00164	.00025	.01032	-.01984	-.02013	-.01942
.470	1000.300	-.05058	.07785	-.01056	-.03280	-.00158	.00007	.45131	-.01996	-.02020	-.01961
	GRADIENT	.00000	.00000	.00000	.00000	.00000	.00000	.00000	.00000	.00000	.00000

RUN NO. 132/ 0 GRADIENT INTERVAL = -5.00/ 5.00

DLT-X	DLT-Z	CN	CA	CLM	CY	CYN	CBL	XCP/L	CPB1	CPB2	CPBC
200.550	751.100	.04583	.06677	-.03659	-.03155	-.00168	.00050	1.45830	-.01971	-.02026	-.01861
200.470	800.490	-.02403	.07183	-.01911	-.03251	-.00163	.00020	-.13529	-.02130	-.02161	-.02055
200.490	900.350	-.05089	.07681	-.01059	-.03287	-.00159	.00006	.45191	-.02205	-.02230	-.02165
200.530	1000.300	-.05059	.07875	-.01062	-.03286	-.00155	.00006	.44999	-.02173	-.02196	-.02134
	GRADIENT	.00000	.00000	.00000	.00000	.00000	.00000	.00000	.00000	.00000	.00000

RUN NO. 133/ 0 GRADIENT INTERVAL = -5.00/ 5.00

DLT-X	DLT-Z	CN	CA	CLM	CY	CYN	CBL	XCP/L	CPB1	CPB2	CPBC
400.540	749.520	-.05064	.07479	-.01069	-.03272	-.00164	.00007	.44890	-.01528	-.01633	-.01350
400.580	800.480	-.05074	.07623	-.01059	-.03276	-.00161	.00006	.45127	-.01327	-.01423	-.01133
400.570	900.470	-.05043	.07815	-.01059	-.03285	-.00157	.00006	.45010	-.01284	-.01367	-.01127
400.570	1000.300	-.05048	.07951	-.01065	-.03288	-.00153	.00006	.44905	-.01398	-.01459	-.01291
	GRADIENT	.00000	.00000	.00000	.00000	.00000	.00000	.00000	.00000	.00000	.00000

AEDC VA422(IA17) ORB AND ET SEPARATING(ORB DATA) (RTR219) (24 JUL 75)

REFERENCE DATA

SREF = 2690.0000 SQ.FT. XMRP = 1089.6000 IN. XO
LREF = 1290.3000 IN. YMRP = .0000 IN. YO
BREF = 1290.3000 IN. ZMRP = 375.0000 IN. ZO
SCALE = .0100

PARAMETRIC DATA

DLT-Y = 60.000 ALPHA = 5.000
BETA = .000 DLTALF = .000
DLTBTA = .000 MACH = 5.930
AILRON = .000 ELEVON = .000
GRID = 5.000

RUN NO. 204/ 0 GRADIENT INTERVAL = -5.00/ 5.00

DLT-X	DLT-Z	CN	CA	CLM	CY	CYN	CBL	XCP/L	CPB1	CPB2	CPBC
.603	17.641	.03401	.06304	-.01283	-.00305	-.00105	.00028	1.03740	-.02946	-.02916	-.02854
.533	101.180	.04252	.07566	-.00402	.00034	.00105	.00001	.75459	-.02972	-.02944	-.02886
.572	201.910	.06641	.07320	.00837	.00109	.00147	-.00152	.53394	-.02994	-.02970	-.02910
.551	300.810	.11238	.07495	-.00047	.00105	.00081	-.00214	.66419	-.03005	-.02977	-.02916
.643	399.630	.13957	.07262	-.01320	.00528	-.00104	.00051	.75460	-.03012	-.02978	-.02918
.737	498.180	.09258	.06610	-.01484	.00190	-.00024	.00207	.82030	-.03015	-.02977	-.02917
.722	598.810	.04878	.06678	-.00926	.00096	-.00008	-.00002	.84986	-.03009	-.02972	-.02909
	GRADIENT	.00000	.00000	.00000	.00000	.00000	.00000	.00000	.00000	.00000	.00000

RUN NO. 203/ 0 GRADIENT INTERVAL = -5.00/ 5.00

DLT-X	DLT-Z	CN	CA	CLM	CY	CYN	CBL	XCP/L	CPB1	CPB2	CPBC
200.600	19.121	.04612	.07471	-.00004	-.00001	.00151	-.00018	.66076	-.02898	-.02869	-.02794
200.510	99.580	.06118	.07265	.00818	.00163	.00241	-.00103	.52632	-.02894	-.02866	-.02791
200.580	199.880	.09911	.07459	.00417	.00030	.00099	-.00251	.61790	-.02885	-.02858	-.02784
200.650	301.700	.14242	.07478	-.00987	.00422	-.00070	-.00086	.72934	-.02873	-.02843	-.02767
200.630	401.640	.11521	.06675	-.01618	.00235	-.00030	.00311	.80044	-.02876	-.02844	-.02768
200.660	500.290	.05856	.06581	-.01123	.00127	-.00009	.00018	.85177	-.02881	-.02850	-.02775
200.710	599.880	.04284	.06756	-.00731	.00089	-.00002	-.00004	.83061	-.02879	-.02845	-.02772
	GRADIENT	.00000	.00000	.00000	.00000	.00000	.00000	.00000	.00000	.00000	.00000

RUN NO. 202/ 0 GRADIENT INTERVAL = -5.00/ 5.00

DLT-X	DLT-Z	CN	CA	CLM	CY	CYN	CBL	XCP/L	CPB1	CPB2	CPBC
400.510	19.718	.09109	.07270	.01232	.00263	.00253	-.00174	.52475	-.02890	-.02866	-.02790
400.440	98.530	.09059	.07234	.00678	.00040	.00129	-.00260	.58514	-.02895	-.02867	-.02793
400.510	199.860	.13482	.07557	-.00482	.00336	-.00020	-.00176	.69424	-.02894	-.02856	-.02787
400.500	299.120	.13834	.06850	-.01582	.00343	-.00045	.00405	.77437	-.02895	-.02855	-.02791
400.430	397.910	.07458	.06545	-.01335	.00148	-.00012	.00085	.83899	-.02905	-.02865	-.02801
400.650	499.460	.04432	.06651	-.00792	.00086	-.00003	-.00003	.83880	-.02907	-.02869	-.02801
400.630	599.820	.04282	.06791	-.00732	.00100	-.00002	-.00004	.83092	-.02888	-.02851	-.02771
	GRADIENT	.00000	.00000	.00000	.00000	.00000	.00000	.00000	.00000	.00000	.00000

PRECEDING PAGE BLANK NOT FILMED

ORIGINAL PAGE IS OF POOR QUALITY

AEDC VA422(IA17) ORB AND ET SEPARATING(ORB DATA) (RTR223) (24 JUL 75)

REFERENCE DATA

SREF = 2690.0000 SQ.FT. XMRP = 1089.6000 IN. XO
LREF = 1290.3000 IN. YMRP = .0000 IN. YO
BREF = 1290.3000 IN. ZMRP = 375.0000 IN. ZO
SCALE = .0100

PARAMETRIC DATA

DLT-Y = 60.000 ALPHA = 5.000
BETA = .000 DLTALF = .000
DLTBTA = 3.000 MACH = 5.930
AILRON = .000 ELEVON = .000
GRID = 5.000

RUN NO. 234/ 0 GRADIENT INTERVAL = -5.00/ 5.00

DLT-X	DLT-Z	CN	CA	CLM	CY	CYN	CBL	XCP/L	CPB1	CPB2	CPBC
.576	19.297	.03776	.06314	-.01273	-.00412	-.00083	-.00170	.99713	-.02792	-.02775	-.02702
.590	97.867	.03816	.07635	-.00477	-.00201	.00024	-.00109	.78509	-.02761	-.02746	-.02668
.648	199.160	.06533	.07471	.00917	-.00005	.00077	-.00151	.51962	-.02734	-.02724	-.02639
.661	300.190	.11393	.07705	.00028	.00011	.00031	-.00148	.65753	-.02706	-.02700	-.02610
.638	402.060	.14900	.07531	-.01369	.00242	-.00056	-.00047	.75191	-.02682	-.02678	-.02580
.712	501.230	.09681	.06751	-.01522	.00142	-.00021	.00082	.81719	-.02664	-.02661	-.02556
.660	598.490	.05068	.06820	-.00955	.00103	-.00015	-.00003	.84839	-.02662	-.02658	-.02550
	GRADIENT	.00000	.00000	.00000	.00000	.00000	.00000	.00000	.00000	.00000	.00000

RUN NO. 235/ 0 GRADIENT INTERVAL = -5.00/ 5.00

DLT-X	DLT-Z	CN	CA	CLM	CY	CYN	CBL	XCP/L	CPB1	CPB2	CPBC
200.560	22.412	.04659	.07631	.00024	-.00191	.00073	-.00140	.65492	-.02881	-.02862	-.02811
200.510	101.040	.06395	.07411	.00849	-.00028	.00118	-.00137	.52724	-.02920	-.02900	-.02851
200.600	200.480	.10031	.07596	.00499	-.00022	.00054	-.00194	.61029	-.02941	-.02917	-.02864
200.610	300.260	.14720	.07693	-.00950	.00215	-.00040	-.00114	.72447	-.02947	-.02920	-.02862
200.650	398.270	.12066	.06830	-.01657	.00165	-.00025	.00130	.79730	-.02954	-.02925	-.02867
200.700	498.390	.06222	.06715	-.01170	.00123	-.00016	.00008	.84811	-.02958	-.02929	-.02868
200.580	599.610	.04343	.06900	-.00738	.00093	-.00014	-.00004	.82993	-.02951	-.02924	-.02856
	GRADIENT	.00000	.00000	.00000	.00000	.00000	.00000	.00000	.00000	.00000	.00000

AEDC VA422(IA17) ORB AND ET SEPARATING(ORB DATA) (RTR224) (24 JUL 75)

REFERENCE DATA

SREF = 2690.0000 SQ.FT. XMRP = 1089.6000 IN. XO
LREF = 1290.3000 IN. YMRP = .0000 IN. YO
BREF = 1290.3000 IN. ZMRP = 375.0000 IN. ZO
SCALE = .0100

PARAMETRIC DATA

DLT-Y = 60.000 ALPHA = 5.000
BETA = .000 DLTALF = -10.000
DLTBTA = 3.000 MACH = 5.930
AILRON = .000 ELEVON = .000
GRID = 5.000

RUN NO. 228/ 0 GRADIENT INTERVAL = -5.00/ 5.00

DLT-X	DLT-Z	CN	CA	CLM	CY	CYN	CBL	XCP/L	CPB1	CPB2	CPBC
.508	401.240	.19301	.07662	-.00750	.00012	.00057	-.00194	.69887	-.02587	-.02584	-.02506
.457	502.820	.19436	.07700	-.01800	.00312	-.00069	-.00071	.75261	-.02567	-.02565	-.02484
.504	601.900	.12341	.06705	-.01937	.00150	-.00026	.00145	.81693	-.02556	-.02553	-.02471
.555	749.970	.04568	.06771	-.00819	.00093	-.00012	-.00004	.83934	-.02578	-.02570	-.02510
-.568	803.080	.04381	.06933	-.00745	.00098	-.00011	-.00004	.83013	-.02550	-.02543	-.02482
	GRADIENT	.00000	.00000	.00000	.00000	.00000	.00000	.00000	.00000	.00000	.00000

RUN NO. 229/ 0 GRADIENT INTERVAL = -5.00/ 5.00

DLT-X	DLT-Z	CN	CA	CLM	CY	CYN	CBL	XCP/L	CPB1	CPB2	CPBC
200.560	399.810	.20163	.07712	-.01456	.00297	-.00043	-.00154	.73224	-.02622	-.02608	-.02523
200.490	497.890	.15842	.06834	-.02171	.00190	-.00028	.00202	.79705	-.02591	-.02574	-.02477
200.560	597.760	.07457	.06667	-.01372	.00129	-.00016	.00025	.84399	-.02586	-.02570	-.02480
200.550	749.640	.04368	.06947	-.00746	.00100	-.00012	-.00004	.83086	-.02571	-.02560	-.02453
200.610	800.150	.04377	.06972	-.00746	.00088	-.00012	-.00004	.83038	-.02569	-.02558	-.02459
	GRADIENT	.00000	.00000	.00000	.00000	.00000	.00000	.00000	.00000	.00000	.00000

RUN NO. 230/ 0 GRADIENT INTERVAL = -5.00/ 5.00

DLT-X	DLT-Z	CN	CA	CLM	CY	CYN	CBL	XCP/L	CPB1	CPB2	CPBC
400.430	402.750	.18204	.06849	-.02201	.00228	-.00031	.00243	.78092	-.02654	-.02647	-.02550
400.540	501.050	.09325	.06613	-.01591	.00140	-.00021	.00072	.83065	-.02677	-.02667	-.02574
400.540	600.240	.04832	.06734	-.00903	.00102	-.00012	-.00002	.84685	-.02714	-.02698	-.02622
400.540	750.070	.04365	.06969	-.00745	.00089	-.00013	-.00004	.83059	-.02682	-.02666	-.02600
400.520	800.070	.04359	.06971	-.00746	.00098	-.00012	-.00004	.83108	-.02649	-.02634	-.02562
	GRADIENT	.00000	.00000	.00000	.00000	.00000	.00000	.00000	.00000	.00000	.00000

AEDC VA422(IA17) ORB AND ET SEPARATING(ORB DATA) (RTR226) (24 JUL 75)

REFERENCE DATA

SREF = 2690.0000 SQ.FT. XMRP = 1089.6000 IN. XO
LREF = 1290.3000 IN. YMRP = .0000 IN. YO
BREF = 1290.3000 IN. ZMRP = 375.0000 IN. ZO
SCALE = .0100

PARAMETRIC DATA

DLT-Y = 60.000 ALPHA = 5.000
BETA = .000 DLTALF = -20.000
DLTBTA = 3.000 MACH = 5.930
AILRON = .000 ELEVON = .000
GRID = 5.000

RUN NO. 226/ 0 GRADIENT INTERVAL = -5.00/ 5.00

DLT-X	DLT-Z	CN	CA	CLM	CY	CYN	CBL	XCP/L	CPB1	CPB2	CPBC
.436	801.370	.15757	.05975	-.03521	.00109	-.00014	.00032	.88344	-.02125	-.02175	-.01986
.590	900.260	.05237	.06517	-.01034	.00080	-.00010	.00002	.85753	-.02214	-.02252	-.02057
.513	1000.200	.04314	.06627	-.00724	.00085	-.00010	-.00004	.82775	-.02366	-.02390	-.02224
	GRADIENT	.00000	.00000	.00000	.00000	.00000	.00000	.00000	.00000	.00000	.00000

RUN NO. 222/ 0 GRADIENT INTERVAL = -5.00/ 5.00

DLT-X	DLT-Z	CN	CA	CLM	CY	CYN	CBL	XCP/L	CPB1	CPB2	CPBC
200.440	750.800	.10124	.06128	-.02207	.00137	-.00019	.00021	.87802	-.02204	-.02249	-.02106
200.390	800.230	.05847	.06511	-.01194	.00085	-.00013	.00002	.86419	-.02246	-.02287	-.02155
200.470	900.270	.04360	.06731	-.00734	.00077	-.00010	-.00005	.82823	-.02251	-.02292	-.02177
200.550	1000.100	.04400	.06919	-.00745	.00083	-.00011	-.00004	.82925	-.02168	-.02218	-.02091
	GRADIENT	.00000	.00000	.00000	.00000	.00000	.00000	.00000	.00000	.00000	.00000

RUN NO. 223/ 0 GRADIENT INTERVAL = -5.00/ 5.00

DLT-X	DLT-Z	CN	CA	CLM	CY	CYN	CBL	XCP/L	CPB1	CPB2	CPBC
400.440	749.710	.04845	.06599	-.00905	.00091	-.00011	-.00002	.84690	-.02097	-.02142	-.01978
400.540	800.360	.04359	.06719	-.00736	.00080	-.00010	-.00004	.82878	-.02045	-.02095	-.01920
400.730	900.460	.04415	.06917	-.00744	.00084	-.00011	-.00004	.82848	-.02014	-.02063	-.01895
400.550	1000.500	.04406	.06937	-.00745	.00091	-.00011	-.00004	.82917	-.02078	-.02118	-.01987
	GRADIENT	.00000	.00000	.00000	.00000	.00000	.00000	.00000	.00000	.00000	.00000

AEDC VA422(IA17) ORB AND ET SEPARATING(ORB DATA) (RTR227) (24 JUL 75)

REFERENCE DATA

SREF = 2690.0000 SQ.FT. XMRP = 1089.6000 IN. XO
LREF = 1290.3000 IN. YMRP = .0000 IN. YO
BREF = 1290.3000 IN. ZMRP = 375.0000 IN. ZO
SCALE = .0100

PARAMETRIC DATA

DLT-Y = 60.000 ALPHA = 5.000
BETA = 3.000 DLTALF = .000
DLTBTA = .000 MACH = 5.930
AILRON = .000 ELEVON = .000
GRID = 4.000

RUN NO. 164/ 0 GRADIENT INTERVAL = -5.00/ 5.00

DLT-X	DLT-Z	CN	CA	CLM	CY	CYN	CBL	XCP/L	CPB1	CPB2	CPBC
.673	17.677	.03634	.06116	-.01350	-.03169	-.00163	-.00250	1.03140	-.02977	-.02973	-.02917
.675	101.010	.04057	.07835	-.00451	-.03294	-.00331	-.00235	.77114	-.02999	-.02996	-.02942
.601	202.160	.06890	.07384	.00897	-.03675	-.00194	-.00347	.52980	-.03020	-.03019	-.02965
.680	300.800	.11705	.07524	-.00040	-.03512	-.00086	-.00431	.66339	-.03028	-.03029	-.02971
.704	399.540	.14446	.07208	-.01386	-.02764	-.00263	-.00193	.75592	-.03032	-.03032	-.02972
.676	497.920	.09474	.06528	-.01581	-.02916	-.00205	.00068	.82691	-.03034	-.03032	-.02972
.799	599.020	.04969	.06594	-.00977	-.02964	-.00209	-.00094	.85656	-.03030	-.03026	-.02964
	GRADIENT	.00000	.00000	.00000	.00000	.00000	.00000	.00000	.00000	.00000	.00000

RUN NO. 163/ 0 GRADIENT INTERVAL = -5.00/ 5.00

DLT-X	DLT-Z	CN	CA	CLM	CY	CYN	CBL	XCP/L	CPB1	CPB2	CPBC
200.530	18.918	.04620	.07498	-.00069	-.03227	-.00287	-.00281	.67490	-.02931	-.02923	-.02855
200.670	99.616	.06553	.07289	.00826	-.03619	-.00253	-.00286	.53393	-.02930	-.02924	-.02857
200.650	199.790	.10313	.07491	.00448	-.03620	-.00105	-.00420	.61653	-.02918	-.02915	-.02846
200.710	301.960	.14842	.07487	-.01022	-.03036	-.00212	-.00309	.72889	-.02911	-.02908	-.02836
200.670	401.470	.11801	.06605	-.01759	-.02901	-.00205	.00091	.80901	-.02918	-.02914	-.02842
200.670	500.240	.06059	.06503	-.01190	-.02957	-.00209	-.00068	.85632	-.02927	-.02923	-.02852
200.790	600.070	.04337	.06683	-.00769	-.03021	-.00202	-.00100	.83729	-.02939	-.02937	-.02868
	GRADIENT	.00000	.00000	.00000	.00000	.00000	.00000	.00000	.00000	.00000	.00000

AEDC VA422(1A17) ORB AND ET SEPARATING(ORB DATA) (RTR228) (24 JUL 75)

REFERENCE DATA

SREF = 2690.0000 SQ.FT. XMRP = 1089.6000 IN. XO
LREF = 1290.3000 IN. YMRP = .0000 IN. YO
BREF = 1290.3000 IN. ZMRP = 375.0000 IN. ZO
SCALE = .0100

PARAMETRIC DATA

DLT-Y = 60.000 ALPHA = 5.000
BETA = 3.000 DLTALF = -10.000
DLTBTA = .000 MACH = 5.930
AILRON = .000 ELEVON = .000
GRID = 4.000

RUN NO. 172/ 0 GRADIENT INTERVAL = -5.00/ 5.00

DLT-X	DLT-Z	CN	CA	CLM	CY	CYN	CBL	XCP/L	CPB1	CPB2	CPBC
.666	400.870	.19659	.07583	-.00816	-.03483	-.00080	-.00407	.70149	-.02753	-.02746	-.02640
.677	498.780	.18938	.07408	-.01777	-.02714	-.00271	-.00224	.75383	-.02745	-.02732	-.02633
.646	597.400	.12286	.06560	-.02031	-.02827	-.00222	.00211	.82532	-.02753	-.02738	-.02646
.553	748.390	.04524	.06707	-.00839	-.02997	-.00208	-.00099	.84545	-.02759	-.02744	-.02656
.669	800.040	.04358	.06770	-.00777	-.03022	-.00205	-.00100	.83833	-.02754	-.02739	-.02647
	GRADIENT	.00000	.00000	.00000	.00000	.00000	.00000	.00000	.00000	.00000	.00000

RUN NO. 171/ 0 GRADIENT INTERVAL = -5.00/ 5.00

DLT-X	DLT-Z	CN	CA	CLM	CY	CYN	CBL	XCP/L	CPB1	CPB2	CPBC
200.500	402.860	.19984	.07555	-.01458	-.02946	-.00219	-.00321	.73296	-.02830	-.02829	-.02742
200.480	502.110	.15081	.06645	-.02267	-.02798	-.00226	.00252	.81033	-.02836	-.02834	-.02748
200.500	600.510	.07142	.06500	-.01380	-.02935	-.00212	-.00037	.85314	-.02850	-.02849	-.02767
200.630	750.150	.04364	.06755	-.00773	-.03007	-.00203	-.00100	.83719	-.02842	-.02839	-.02764
200.690	800.110	.04368	.06781	-.00775	-.03023	-.00204	-.00101	.83740	-.02826	-.02822	-.02745
	GRADIENT	.00000	.00000	.00000	.00000	.00000	.00000	.00000	.00000	.00000	.00000

RUN NO. 170/ 0 GRADIENT INTERVAL = -5.00/ 5.00

DLT-X	DLT-Z	CN	CA	CLM	CY	CYN	CBL	XCP/L	CPB1	CPB2	CPBC
400.570	400.040	.18095	.06755	-.02365	-.02786	-.00216	.00204	.79073	-.02816	-.02810	-.02721
400.520	497.640	.09206	.06473	-.01673	-.02925	-.00202	.00008	.84175	-.02797	-.02792	-.02697
400.590	599.210	.04723	.06658	-.00903	-.02981	-.00210	-.00099	.85112	-.02785	-.02779	-.02683
400.640	750.020	.04379	.06787	-.00777	-.03014	-.00203	-.00100	.83756	-.02773	-.02769	-.02677
400.710	800.100	.04379	.06782	-.00776	-.03017	-.00204	-.00100	.83711	-.02784	-.02780	-.02692
	GRADIENT	.00000	.00000	.00000	.00000	.00000	.00000	.00000	.00000	.00000	.00000

AEDC VA422(IA17) ORB AND ET SEPARATING(ORB DATA) (RTR230) (24 JUL 75)

REFERENCE DATA

SREF = 2690.0000 SQ.FT. XMRP = 1089.8000 IN. XO
LREF = 1290.3000 IN. YMRP = .0000 IN. YO
BREF = 1290.3000 IN. ZMRP = 375.0000 IN. ZO
SCALE = .0100

PARAMETRIC DATA

DLT-Y = 60.000 ALPHA = 5.000
BETA = 3.000 DLTALF = -20.000
DLTBTA = .000 MACH = 5.930
AILRON = .000 ELEVON = .000
GRID = 4.000

RUN NO. 181/ 0 GRADIENT INTERVAL = -5.00/ 5.00

DLT-X	DLT-Z	CN	CA	CLM	CY	CYN	CBL	XCP/L	CPB1	CPB2	CPBC
.556	800.230	.15450	.05867	-.03604	-.02746	-.00230	.00126	.89327	-.02347	-.02345	-.02240
.601	899.210	.04995	.06573	-.01006	-.02934	-.00216	-.00094	.86140	-.02323	-.02321	-.02214
.643	1000.300	.04391	.06761	-.00778	-.03004	-.00207	-.00100	.83720	-.02293	-.02293	-.02183
	GRADIENT	.00000	.00000	.00000	.00000	.00000	.00000	.00000	.00000	.00000	.00000

RUN NO. 179/ 0 GRADIENT INTERVAL = -5.00/ 5.00

DLT-X	DLT-Z	CN	CA	CLM	CY	CYN	CBL	XCP/L	CPB1	CPB2	CPBC
200.620	750.870	.09675	.06077	-.02149	-.02853	-.00222	.00004	.88216	-.02466	-.02488	-.02369
200.510	799.870	.05605	.06463	-.01167	-.02923	-.00221	-.00087	.86830	-.02387	-.02416	-.02282
200.620	900.290	.04406	.06724	-.00773	-.02999	-.00207	-.00100	.83550	-.02326	-.02360	-.02220
200.650	1000.400	.04442	.06822	-.00779	-.03006	-.00206	-.00101	.83549	-.02317	-.02349	-.02219
	GRADIENT	.00000	.00000	.00000	.00000	.00000	.00000	.00000	.00000	.00000	.00000

RUN NO. 178/ 0 GRADIENT INTERVAL = -5.00/ 5.00

DLT-X	DLT-Z	CN	CA	CLM	CY	CYN	CBL	XCP/L	CPB1	CPB2	CPBC
400.480	750.220	.04693	.06608	-.00882	-.02960	-.00214	-.00101	.84795	-.02557	-.02568	-.02490
400.560	800.220	.04423	.06744	-.00773	-.03016	-.00207	-.00101	.83479	-.02536	-.02548	-.02472
400.460	900.200	.04428	.06817	-.00779	-.03007	-.00206	-.00101	.83597	-.02491	-.02506	-.02426
400.620	1000.300	.04416	.06824	-.00779	-.03011	-.00206	-.00101	.83630	-.02428	-.02447	-.02358
	GRADIENT	.00000	.00000	.00000	.00000	.00000	.00000	.00000	.00000	.00000	.00000

AEDC VA422(IA17) ORB AND ET SEPARATING(ORB DATA) (RTR231) (24 JUL 75)

REFERENCE DATA

SREF = 2690.0000 SQ.FT. XMRP = 1089.6000 IN. XO
LREF = 1290.3000 IN. YMRP = .0000 IN. YO
BREF = 1290.3000 IN. ZMRP = 375.0000 IN. ZO
SCALE = .0100

PARAMETRIC DATA

DLT-Y = 60.000 ALPHA = 5.000
BETA = 3.000 DLTALF = .000
DLTBTA = 3.000 MACH = 5.930
AILRON = .000 ELEVON = .000
GRID = 4.000

RUN NO. 194/ 0 GRADIENT INTERVAL = -5.00/ 5.00

DLT-X	DLT-Z	CN	CA	CLM	CY	CYN	CBL	XCP/L	CPB1	CPB2	CPBC
.660	19.251	.03677	.06227	-.01419	-.03309	-.00177	-.00471	1.04600	-.02846	-.02835	-.02775
.715	97.629	.03445	.07745	-.00488	-.03487	-.00380	-.00326	.80177	-.02818	-.02808	-.02742
.689	199.110	.06837	.07543	.00916	-.03812	-.00297	-.00358	.53308	-.02794	-.02787	-.02716
.827	300.230	.11786	.07720	.00011	-.03636	-.00123	-.00362	.65904	-.02768	-.02764	-.02686
.824	402.230	.15228	.07509	-.01420	-.03089	-.00211	-.00295	.75322	-.02754	-.02751	-.02668
.674	501.170	.09971	.06689	-.01632	-.02978	-.00199	-.00091	.82368	-.02745	-.02743	-.02654
.953	598.500	.05150	.06743	-.01008	-.02957	-.00216	-.00096	.85570	-.02744	-.02743	-.02654
	GRADIENT	.00000	.00000	.00000	.00000	.00000	.00000	.00000	.00000	.00000	.00000

RUN NO. 195/ 0 GRADIENT INTERVAL = -5.00/ 5.00

DLT-X	DLT-Z	CN	CA	CLM	CY	CYN	CBL	XCP/L	CPB1	CPB2	CPBC
200.700	22.555	.04569	.07686	-.00061	-.03434	-.00359	-.00366	.67327	-.02928	-.02918	-.02874
200.690	100.990	.06215	.07399	.00844	-.03794	-.00395	-.00351	.52420	-.02961	-.02951	-.02911
200.660	200.680	.10292	.07607	.00498	-.03718	-.00165	-.00354	.61163	-.02975	-.02964	-.02921
200.670	300.170	.15182	.07725	-.00995	-.03394	-.00143	-.00350	.72552	-.02984	-.02971	-.02926
200.650	398.080	.12354	.06769	-.01780	-.02987	-.00194	-.00165	.80405	-.02988	-.02974	-.02930
200.590	498.400	.06404	.06656	-.01244	-.02961	-.00212	-.00084	.85418	-.02993	-.02979	-.02932
200.680	599.720	.04362	.06831	-.00768	-.02992	-.00211	-.00099	.83600	-.02989	-.02975	-.02922
	GRADIENT	.00000	.00000	.00000	.00000	.00000	.00000	.00000	.00000	.00000	.00000

ORIGINAL PAGE IS OF POOR QUALITY

AEDC VA422(IA17) ORB AND ET SEPARATING(ORB DATA) (RTR232) (24 JUL 75)

REFERENCE DATA

SREF = 2690.0000 SQ.FT. XMRP = 1089.6000 IN. XO
LREF = 1290.3000 IN. YMRP = .0000 IN. YO
BREF = 1290.3000 IN. ZMRP = 375.0000 IN. ZO
SCALE = .0100

PARAMETRIC DATA

DLT-Y = 60.000 ALPHA = 5.000
BETA = 3.000 DLTALF = -10.000
DLTBTA = 3.000 MACH = 5.930
AILRON = .000 ELEVON = .000
GRID = 4.000

RUN NO. 188/ 0 GRADIENT INTERVAL = -5.00/ 5.00

DLT-X	DLT-Z	CN	CA	CLM	CY	CYN	CBL	XCP/L	CPB1	CPB2	CPBC
.646	401.220	.19028	.07733	-.00558	-.03822	-.00070	-.00537	.68934	-.02640	-.02641	-.02577
.575	502.980	.19914	.07624	-.01876	-.03005	-.00225	-.00355	.75422	-.02618	-.02622	-.02552
.541	601.750	.12525	.06620	-.02075	-.02912	-.00209	.00035	.82565	-.02606	-.02610	-.02539
.611	750.080	.04580	.06772	-.00843	-.02994	-.00212	-.00098	.84411	-.02576	-.02584	-.02517
-.326	803.160	.04425	.06847	-.00777	-.03012	-.00209	-.00100	.83564	-.02549	-.02558	-.02488
	GRADIENT	.00000	.00000	.00000	.00000	.00000	.00000	.00000	.00000	.00000	.00000

RUN NO. 189/ 0 GRADIENT INTERVAL = -5.00/ 5.00

DLT-X	DLT-Z	CN	CA	CLM	CY	CYN	CBL	XCP/L	CPB1	CPB2	CPBC
200.690	399.890	.20629	.07828	-.01418	-.03309	-.00155	-.00488	.72876	-.02675	-.02671	-.02601
200.600	497.390	.16104	.06790	-.02344	-.02936	-.00198	-.00055	.80558	-.02670	-.02661	-.02588
200.560	597.890	.07568	.06622	-.01447	-.02956	-.00208	-.00061	.85121	-.02676	-.02667	-.02596
200.590	749.590	.04391	.06869	-.00779	-.03004	-.00208	-.00100	.83749	-.02685	-.02676	-.02602
200.590	800.090	.04392	.06894	-.00781	-.03003	-.00208	-.00100	.83781	-.02688	-.02682	-.02609
	GRADIENT	.00000	.00000	.00000	.00000	.00000	.00000	.00000	.00000	.00000	.00000

RUN NO. 190/ 0 GRADIENT INTERVAL = -5.00/ 5.00

DLT-X	DLT-Z	CN	CA	CLM	CY	CYN	CBL	XCP/L	CPB1	CPB2	CPBC
400.600	402.630	.18657	.06894	-.02424	-.02961	-.00186	-.00129	.78992	-.02780	-.02777	-.02705
400.570	501.090	.09493	.06549	-.01716	-.02954	-.00199	-.00067	.84077	-.02790	-.02787	-.02716
400.550	600.170	.04845	.06734	-.00934	-.02974	-.00215	-.00099	.85281	-.02796	-.02791	-.02728
400.600	750.020	.04395	.06892	-.00779	-.03010	-.00208	-.00100	.83736	-.02764	-.02758	-.02698
400.640	800.090	.04404	.06894	-.00779	-.03014	-.00209	-.00100	.83680	-.02742	-.02736	-.02672
	GRADIENT	.00000	.00000	.00000	.00000	.00000	.00000	.00000	.00000	.00000	.00000

AEDC VA422(IA17) ORB AND ET SEPARATING(ORB DATA) (RTR234) (24 JUL 75)

REFERENCE DATA

SREF = 2690.0000 SQ.FT. XMRP = 1089.6000 IN. XO
LREF = 1290.3000 IN. YMRP = .0000 IN. YO
BREF = 1290.3000 IN. ZMRP = 375.0000 IN. ZO
SCALE = .0100

PARAMETRIC DATA

DLT-Y = 60.000 ALPHA = 5.000
BETA = 3.000 DLTALF = -20.000
DLTBTA = 3.000 MACH = 5.930
AILRON = .000 ELEVON = .000
GRID = 4.000

RUN NO. 188/ 0 GRADIENT INTERVAL = -5.00/ 5.00

DLT-X	DLT-Z	CN	CA	CLM	CY	CYN	CBL	XCP/L	CPB1	CPB2	CPBC
.644	801.340	.16038	.05922	-.03717	-.03085	-.00159	-.00115	.89181	-.02387	-.02403	-.02289
.487	900.270	.05144	.06523	-.01031	-.02967	-.00215	-.00100	.86037	-.02427	-.02441	-.02338
.575	1000.200	.04411	.06732	-.00768	-.03005	-.00209	-.00100	.83407	-.02435	-.02451	-.02353
	GRADIENT	.00000	.00000	.00000	.00000	.00000	.00000	.00000	.00000	.00000	.00000

RUN NO. 182/ 0 GRADIENT INTERVAL = -5.00/ 5.00

DLT-X	DLT-Z	CN	CA	CLM	CY	CYN	CBL	XCP/L	CPB1	CPB2	CPBC
200.680	750.750	.10054	.06071	-.02242	-.02930	-.00211	-.00069	.88298	-.02516	-.02520	-.02427
200.530	800.370	.05783	.06437	-.01219	-.02934	-.00221	-.00090	.87087	-.02570	-.02568	-.02497
200.560	900.250	.04401	.06712	-.00769	-.03007	-.00209	-.00100	.83485	-.02562	-.02563	-.02503
200.490	1000.100	.04443	.06841	-.00779	-.03019	-.00207	-.00101	.83531	-.02518	-.02519	-.02458
	GRADIENT	.00000	.00000	.00000	.00000	.00000	.00000	.00000	.00000	.00000	.00000

RUN NO. 183/ 0 GRADIENT INTERVAL = -5.00/ 5.00

DLT-X	DLT-Z	CN	CA	CLM	CY	CYN	CBL	XCP/L	CPB1	CPB2	CPBC
400.560	749.700	.04818	.06527	-.00924	-.02961	-.00214	-.00101	.85178	-.02323	-.02337	-.02211
400.600	800.410	.04420	.06763	-.00774	-.03005	-.00208	-.00100	.83518	-.02291	-.02310	-.02188
400.580	900.370	.04440	.06843	-.00779	-.03011	-.00207	-.00101	.83535	-.02299	-.02316	-.02205
400.590	1000.400	.04441	.06855	-.00779	-.03011	-.00208	-.00101	.83536	-.02348	-.02361	-.02269
	GRADIENT	.00000	.00000	.00000	.00000	.00000	.00000	.00000	.00000	.00000	.00000

AEDC VA422(IA17) ORB AND ET SEPARATING(ORB DATA) (RTR235) (24 JUL 75)

REFERENCE DATA

SREF = 2890.0000 SQ.FT. XMRP = 1089.6000 IN. XO
LREF = 1290.3000 IN. YMRP = .0000 IN. YO
BREF = 1290.3000 IN. ZMRP = 375.0000 IN. ZO
SCALE = .0100

PARAMETRIC DATA

DLT-Y = 60.000 ALPHA = -5.000
BETA = .000 DLTALF = .000
DLTBTA = .000 MACH = 5.930
AILRON = .000 ELEVON = .000
GRID = 6.000

RUN NO. 244/ 0 GRADIENT INTERVAL = -5.00/ 5.00

DLT-X	DLT-Z	CN	CA	CLM	CY	CYN	CBL	XCP/L	CPB1	CPB2	CPBC
.558	17.571	-.06803	.10156	-.01075	.00831	.00147	.00134	.50197	-.02726	-.02621	-.02559
.498	100.800	-.05707	.09808	-.00550	.01445	.00188	.00015	.56355	-.02760	-.02654	-.02597
.514	199.120	-.06238	.09459	-.01085	.00625	-.00018	.00023	.48601	-.02776	-.02665	-.02598
.534	298.490	-.09106	.08850	-.01731	.00290	-.00006	.00113	.46990	-.02757	-.02645	-.02570
.471	399.000	-.12865	.08748	-.01641	.00236	-.00001	.00014	.53243	-.02748	-.02640	-.02566
.587	500.070	-.13852	.08831	-.01401	.00214	.00000	-.00001	.55888	-.02745	-.02640	-.02568
.581	600.020	-.13858	.08859	-.01402	.00211	.00000	-.00001	.55886	-.02742	-.02638	-.02569
	GRADIENT	.00000	.00000	.00000	.00000	.00000	.00000	.00000	.00000	.00000	.00000

RUN NO. 243/ 0 GRADIENT INTERVAL = -5.00/ 5.00

DLT-X	DLT-Z	CN	CA	CLM	CY	CYN	CBL	XCP/L	CPB1	CPB2	CPBC
200.500	21.952	-.04367	.10233	.00113	.01850	.00343	.00056	.68583	-.02721	-.02619	-.02541
200.530	101.770	-.05526	.09424	-.00475	.00816	.00107	.00093	.57402	-.02757	-.02662	-.02599
200.540	202.190	-.06230	.09341	-.01471	.00784	-.00102	.00179	.42382	-.02757	-.02664	-.02603
200.410	300.670	-.10655	.08759	-.01813	.00266	.00002	.00038	.48987	-.02758	-.02665	-.02606
200.580	400.130	-.13478	.08767	-.01514	.00218	-.00002	.00007	.54769	-.02756	-.02665	-.02607
200.560	500.130	-.13867	.08858	-.01403	.00208	.00000	-.00000	.55881	-.02737	-.02644	-.02586
200.480	600.150	-.13858	.08853	-.01402	.00217	.00000	-.00000	.55003	-.02718	-.02625	-.02564
	GRADIENT	.00000	.00000	.00000	.00000	.00000	.00000	.00000	.00000	.00000	.00000

RUN NO. 242/ 0 GRADIENT INTERVAL = -5.00/ 5.00

DLT-X	DLT-Z	CN	CA	CLM	CY	CYN	CBL	XCP/L	CPB1	CPB2	CPBC
400.420	19.570	-.02229	.09570	.00369	.01177	.00214	.00193	.82566	-.02748	-.02638	-.02545
400.450	100.100	-.04165	.09400	-.00815	.00830	.00003	.00056	.46431	-.02666	-.02554	-.02460
400.400	197.790	-.07099	.08914	-.01684	.00360	-.00013	.00211	.42281	-.02646	-.02539	-.02447
400.430	298.180	-.11843	.08711	-.01805	.00255	-.00003	.00030	.50760	-.02649	-.02544	-.02456
400.510	399.950	-.13812	.08791	-.01408	.00221	.00000	-.00000	.55824	-.02654	-.02553	-.02469
400.510	500.090	-.13840	.08839	-.01402	.00214	.00001	-.00000	.55869	-.02657	-.02557	-.02477
400.570	600.090	-.13845	.08845	-.01402	.00215	.00000	-.00000	.55876	-.02671	-.02574	-.02501
	GRADIENT	.00000	.00000	.00000	.00000	.00000	.00000	.00000	.00000	.00000	.00000

AEDC VA422(IA17) ORB AND ET SEPARATING(ORB DATA) (RTR236) (24 JUL 75)

REFERENCE DATA

SREF = 2690.0000 SQ.FT. XMRP = 1089.6000 IN. XO
LREF = 1290.3000 IN. YMRP = .0000 IN. YO
BREF = 1290.3000 IN. ZMRP = 375.0000 IN. ZO
SCALE = .0100

PARAMETRIC DATA

DLT-Y = 60.000 ALPHA = -5.000
BETA = .000 DLTALF = -10.000
DLTBTA = .000 MACH = 5.930
AILRON = .000 ELEVON = .000
GRID = 6.000

RUN NO. 252/ 0 GRADIENT INTERVAL = -5.00/ 5.00

DLT-X	DLT-Z	CN	CA	CLM	CY	CYN	CBL	XCP/L	CPB1	CPB2	CPBC
.404	402.690	.05549	.08545	-.04105	.00724	-.00092	.00693	1.39980	-.02239	-.02172	-.02027
.413	496.640	-.08937	.08379	-.02579	.00286	-.00010	.00078	.37143	-.02240	-.02174	-.02040
.446	599.740	-.13653	.08823	-.01453	.00210	-.00003	.00003	.55360	-.02179	-.02121	-.01964
.447	750.080	-.13766	.08937	-.01413	.00199	-.00003	-.00001	.55738	-.02208	-.02150	-.02035
.447	800.210	-.13783	.08941	-.01412	.00208	-.00002	-.00001	.55752	-.02272	-.02211	-.02116
	GRADIENT	.00000	.00000	.00000	.00000	.00000	.00000	.00000	.00000	.00000	.00000

RUN NO. 251/ 0 GRADIENT INTERVAL = -5.00/ 5.00

DLT-X	DLT-Z	CN	CA	CLM	CY	CYN	CBL	XCP/L	CPB1	CPB2	CPBC
200.500	402.120	-.04084	.08245	-.03082	.00412	-.00033	.00190	-.09464	-.02591	-.02511	-.02413
200.640	500.540	-.12259	.08557	-.01819	.00228	-.00007	.00020	.51161	-.02668	-.02594	-.02534
200.440	600.230	-.13770	.08873	-.01409	.00201	-.00002	-.00001	.55766	-.02669	-.02594	-.02542
200.410	750.190	-.13812	.08940	-.01413	.00211	-.00002	-.00001	.55767	-.02620	-.02547	-.02491
200.450	800.140	-.13819	.08940	-.01414	.00205	-.00002	-.00001	.55766	-.02509	-.02515	-.02455
	GRADIENT	.00000	.00000	.00000	.00000	.00000	.00000	.00000	.00000	.00000	.00000

RUN NO. 250/ 0 GRADIENT INTERVAL = -5.00/ 5.00

DLT-X	DLT-Z	CN	CA	CLM	CY	CYN	CBL	XCP/L	CPB1	CPB2	CPBC
400.340	400.230	-.09374	.08532	-.02272	.00280	-.00006	.00054	.41764	-.02511	-.02441	-.02327
400.460	499.550	-.13451	.08777	-.01504	.00216	-.00003	.00007	.54822	-.02431	-.02360	-.02232
400.460	600.010	-.13737	.08919	-.01413	.00210	-.00001	-.00001	.55716	-.02399	-.02325	-.02208
400.470	750.170	-.13780	.08931	-.01413	.00213	-.00001	-.00001	.55749	-.02456	-.02384	-.02297
400.430	800.180	-.13786	.08934	-.01412	.00216	-.00001	-.00001	.55756	-.02494	-.02423	-.02347
	GRADIENT	.00000	.00000	.00000	.00000	.00000	.00000	.00000	.00000	.00000	.00000

AEDC VA422(IA17) ORB AND ET SEPARATING(ORB DATA) (RTR238) (24 JUL 75)

REFERENCE DATA

SREF = 2690.0000 SQ.FT. XMRP = 1089.6000 IN. XO
LREF = 1290.3000 IN. YMRP = .0000 IN. YO
BREF = 1290.3000 IN. ZMRP = 375.0000 IN. ZO
SCALE = .0100

PARAMETRIC DATA

DLT-Y = 60.000 ALPHA = -5.000
BETA = .000 DLTALF = -20.000
DLTBTA = .000 MACH = 5.930
AILRON = .000 ELEVON = .000
GRID = 6.000

RUN NO. 281/ 0 GRADIENT INTERVAL = -5.00/ 5.00

DLT-X	DLT-Z	CN	CA	CLM	CY	CYN	CBL	XCP/L	CPB1	CPB2	CPBC
.453	800.020	.05375	.08256	-.04267	.00564	-.00080	.00382	1.45370	-.01561	-.01533	-.01473
.473	896.810	-.08685	.08329	-.02637	.00352	-.00027	.00071	.35641	-.01599	-.01563	-.01498
.412	999.740	-.13705	.08785	-.01429	.00205	-.00004	-.00000	.55573	-.01589	-.01552	-.01473
	GRADIENT	.00000	.00000	.00000	.00000	.00000	.00000	.00000	.00000	.00000	.00000

RUN NO. 259/ 0 GRADIENT INTERVAL = -5.00/ 5.00

DLT-X	DLT-Z	CN	CA	CLM	CY	CYN	CBL	XCP/L	CPB1	CPB2	CPBC
200.250	754.720	.10541	.07479	-.05060	.00681	-.00109	.00494	1.14000	.00033	-.00039	.00133
200.450	797.380	-.01664	.07781	-.03706	.00538	-.00088	.00133	-1.56690	-.00156	-.00204	-.00070
200.540	898.240	-.13409	.08590	-.01505	.00209	-.00008	.00014	.54773	-.00297	-.00320	-.00206
200.360	1000.300	-.13702	.08835	-.01419	.00194	-.00004	-.00001	.55645	-.00474	-.00479	-.00410
	GRADIENT	.00000	.00000	.00000	.00000	.00000	.00000	.00000	.00000	.00000	.00000

RUN NO. 258/ 0 GRADIENT INTERVAL = -5.00/ 5.00

DLT-X	DLT-Z	CN	CA	CLM	CY	CYN	CBL	XCP/L	CPB1	CPB2	CPBC
400.410	750.860	-.10285	.07854	-.02009	.00341	-.00016	.00095	.46463	-.00721	-.00753	-.00521
400.360	800.670	-.12330	.08224	-.01659	.00277	-.00007	.00060	.52548	-.01137	-.01127	-.00996
400.430	900.440	-.13682	.08624	-.01435	.00198	-.00005	-.00002	.55512	-.01170	-.01157	-.01089
400.480	1000.300	-.13724	.08963	-.01415	.00190	-.00005	-.00001	.55691	-.00916	-.00915	-.00820
	GRADIENT	.00000	.00000	.00000	.00000	.00000	.00000	.00000	.00000	.00000	.00000

AEDC VA422(IA17) ORB AND ET SEPARATING(ORB DATA) (RTR239) (24 JUL 75)

REFERENCE DATA

SREF = 2690.0000 SQ.FT. XMRP = 1089.6000 IN. XO
LREF = 1290.3000 IN. YMRP = .0000 IN. YO
BREF = 1290.3000 IN. ZMRP = 375.0000 IN. ZO
SCALE = .0100

PARAMETRIC DATA

DLT-Y = 60.000 ALPHA = -5.000
BETA = .000 DLTALF = .000
DLTBTA = 3.000 MACH = 5.930
AILRON = .000 ELEVON = .000
GRID = 6.000

RUN NO. 274/ 0 GRADIENT INTERVAL = -5.00/ 5.00

DLT-X	DLT-Z	CN	CA	CLM	CY	CYN	CBL	XCP/L	CPB1	CPB2	CPBC
.583	19.637	-.05987	.10378	-.00988	.00239	.00042	-.00119	.49500	-.02683	-.02609	-.02550
.638	101.530	-.04639	.09952	-.00573	.00693	.00088	-.00088	.53657	-.02709	-.02628	-.02575
.705	201.940	-.05893	.09719	-.01125	.00319	-.00005	-.00035	.46911	-.02719	-.02637	-.02596
.539	301.370	-.09142	.08990	-.01726	.00233	-.00008	.00030	.47116	-.02720	-.02637	-.02600
.521	400.200	-.12814	.08912	-.01657	.00214	-.00010	.00005	.53071	-.02717	-.02634	-.02603
.537	500.190	-.13788	.08994	-.01412	.00218	-.00007	-.00001	.55756	-.02705	-.02621	-.02596
.478	600.170	-.13803	.09026	-.01415	.00208	-.00008	-.00001	.55748	-.02685	-.02603	-.02578
	GRADIENT	.00000	.00000	.00000	.00000	.00000	.00000	.00000	.00000	.00000	.00000

RUN NO. 275/ 0 GRADIENT INTERVAL = -5.00/ 5.00

DLT-X	DLT-Z	CN	CA	CLM	CY	CYN	CBL	XCP/L	CPB1	CPB2	CPBC
200.420	22.932	-.03274	.10566	.00155	.00991	.00214	-.00110	.70730	-.02758	-.02671	-.02625
200.600	98.087	-.05022	.09419	-.00412	.00303	.00082	.00027	.57788	-.02787	-.02692	-.02642
200.480	198.510	-.05660	.09402	-.01469	.00513	-.00062	.00096	.40048	-.02748	-.02651	-.02574
200.550	297.930	-.10455	.08914	-.01823	.00231	-.00005	.00013	.48564	-.02717	-.02622	-.02545
200.570	399.600	-.13374	.08909	-.01529	.00217	-.00009	.00003	.54564	-.02712	-.02619	-.02546
200.490	500.060	-.13784	.08990	-.01408	.00217	-.00007	-.00001	.55786	-.02711	-.02615	-.02545
200.580	600.150	-.13789	.08990	-.01407	.00214	-.00008	-.00001	.55794	-.02718	-.02626	-.02560
	GRADIENT	.00000	.00000	.00000	.00000	.00000	.00000	.00000	.00000	.00000	.00000

AEDC VA422(IA17) ORB AND ET SEPARATING(ORB DATA) (RTR240) (24 JUL 75)

REFERENCE DATA

SREF = 2690.0000 SQ.FT. XMRP = 1089.6000 IN. XO
LREF = 1290.3000 IN. YMRP = .0000 IN. YO
BREF = 1290.3000 IN. ZMRP = 375.0000 IN. ZO
SCALE = .0100

PARAMETRIC DATA

DLT-Y = 60.000 ALPHA = -5.000
BETA = .000 DLTALF = -10.000
DLTBTA = 3.000 MACH = 5.930
AILRON = .000 ELEVON = .000
GRID = 8.000

RUN NO. 268/ 0 GRADIENT INTERVAL = -5.00/ 5.00

DLT-X	DLT-Z	CN	CA	CLM	CY	CYN	CBL	XCP/L	CPB1	CPB2	CPBC
.424	404.110	.05995	.08588	-.04197	.00187	.00001	-.00059	1.36010	-.02327	-.02279	-.02205
.520	500.900	-.08895	.08389	-.02624	.00219	-.00008	.00011	.36498	-.02421	-.02363	-.02327
.616	600.410	-.13625	.08863	-.01443	.00204	-.00007	.00000	.55406	-.02435	-.02374	-.02363
.533	750.200	-.13756	.09016	-.01414	.00197	-.00007	-.00001	.55721	-.02360	-.02296	-.02300
.354	801.130	-.13755	.09018	-.01414	.00209	-.00006	-.00001	.55721	-.02300	-.02238	-.02242
	GRADIENT	.00000	.00000	.00000	.00000	.00000	.00000	.00000	.00000	.00000	.00000

RUN NO. 269/ 0 GRADIENT INTERVAL = -5.00/ 5.00

DLT-X	DLT-Z	CN	CA	CLM	CY	CYN	CBL	XCP/L	CPB1	CPB2	CPBC
200.490	397.910	-.03460	.08286	-.03239	.00249	-.00013	.00033	-.27609	-.02277	-.02229	-.02129
200.510	498.510	-.12103	.08648	-.01860	.00218	-.00008	.00008	.50633	-.02133	-.02099	-.01940
200.470	599.980	-.13716	.08975	-.01418	.00197	-.00006	-.00001	.55664	-.02026	-.01993	-.01842
200.600	750.120	-.13741	.09028	-.01416	.00207	-.00006	-.00001	.55697	-.02115	-.02079	-.01986
200.540	800.050	-.13763	.09031	-.01416	.00199	-.00007	-.00001	.55710	-.02192	-.02152	-.02077
	GRADIENT	.00000	.00000	.00000	.00000	.00000	.00000	.00000	.00000	.00000	.00000

RUN NO. 270/ 0 GRADIENT INTERVAL = -5.00/ 5.00

DLT-X	DLT-Z	CN	CA	CLM	CY	CYN	CBL	XCP/L	CPB1	CPB2	CPBC
400.420	401.140	-.09273	.08603	-.02321	.00229	-.00008	.00015	.40974	-.02542	-.02476	-.02423
400.510	500.620	-.13429	.08860	-.01512	.00204	-.00007	.00001	.54739	-.02540	-.02478	-.02443
400.420	600.210	-.13748	.09008	-.01413	.00208	-.00006	-.00001	.55721	-.02504	-.02447	-.02412
400.470	750.180	-.13784	.09032	-.01416	.00204	-.00006	-.00001	.55730	-.02415	-.02362	-.02320
400.490	800.160	-.13777	.09032	-.01416	.00205	-.00007	-.00001	.55722	-.02369	-.02317	-.02270
	GRADIENT	.00000	.00000	.00000	.00000	.00000	.00000	.00000	.00000	.00000	.00000

AEDC VA422(IA17) ORB AND ET SEPARATING(ORB DATA) (RTR242) (24 JUL 75)

REFERENCE DATA

SREF = 2890.0000 SQ.FT. XMRP = 1089.6000 IN. XO
LREF = 1290.3000 IN. YMRP = .0000 IN. YO
BREF = 1290.3000 IN. ZMRP = 375.0000 IN. ZO
SCALE = .0100

PARAMETRIC DATA

DLT-Y = 60.000 ALPHA = -5.000
BETA = .000 DLTALF = -20.000
DLTBTA = 3.000 MACH = 5.930
AILRON = .000 ELEVON = .000
GRID = 6.000

RUN NO. 266/ 0 GRADIENT INTERVAL = -5.00/ 5.00

DLT-X	DLT-Z	CN	CA	CLM	CY	CYN	CBL	XCP/L	CPB1	CPB2	CPBC
.465	804.520	.06904	.08242	-.04385	.00210	-.00019	-.00003	1.29520	-.01532	-.01496	-.01423
.590	900.950	-.08920	.08264	-.02621	.00143	-.00007	-.00068	.36615	-.01548	-.01500	-.01462
.512	1000.400	-.13693	.08769	-.01421	.00200	-.00005	-.00001	.55621	-.01531	-.01476	-.01465
	GRADIENT	.00000	.00000	.00000	.00000	.00000	.00000	.00000	.00000	.00000	.00000

RUN NO. 262/ 0 GRADIENT INTERVAL = -5.00/ 5.00

DLT-X	DLT-Z	CN	CA	CLM	CY	CYN	CBL	XCP/L	CPB1	CPB2	CPBC
200.350	753.700	.11531	.07393	-.05327	.00077	-.00010	-.00187	1.12200	-.01489	-.01507	-.01312
200.430	802.210	-.02129	.07724	-.03727	.00223	-.00014	-.00055	-1.09000	-.01665	-.01659	-.01542
200.410	900.340	-.13422	.08532	-.01487	.00208	-.00004	-.00003	.54919	-.01827	-.01804	-.01757
200.450	1000.400	-.13684	.08815	-.01411	.00205	-.00005	-.00001	.55689	-.01819	-.01787	-.01755
	GRADIENT	.00000	.00000	.00000	.00000	.00000	.00000	.00000	.00000	.00000	.00000

RUN NO. 263/ 0 GRADIENT INTERVAL = -5.00/ 5.00

DLT-X	DLT-Z	CN	CA	CLM	CY	CYN	CBL	XCP/L	CPB1	CPB2	CPBC
400.350	747.040	-.04636	.07523	-.02852	.00138	.00003	-.00008	.04482	-.01019	-.01074	-.00654
400.510	798.810	-.12398	.08197	-.01648	.00165	-.00005	-.00031	.52711	-.00526	-.00641	-.00131
400.330	900.090	-.13641	.08627	-.01439	.00203	-.00004	-.00001	.55450	-.00295	-.00359	.00023
400.380	1000.400	-.13691	.08987	-.01414	.00185	-.00005	-.00001	.55670	-.00476	-.00505	-.00268
	GRADIENT	.00000	.00000	.00000	.00000	.00000	.00000	.00000	.00000	.00000	.00000

ORIGINAL PAGE IS OF POOR QUALITY

AEDC VA482(IA17) ORB AND ET SEPARATING(ORB DATA) (RTR243) (24 JUL 75)

REFERENCE DATA

SREF = 2690.0000 SQ.FT. XMRP = 1089.6000 IN. XO
LREF = 1290.3000 IN. YMRP = .0000 IN. YO
BREF = 1290.3000 IN. ZMRP = 375.0000 IN. ZO
SCALE = .0100

PARAMETRIC DATA

DLT-Y = 60.000 ALPHA = -5.000
BETA = 3.000 DLTALF = .000
DLTBTA = .000 MACH = 5.930
AILRON = .000 ELEVON = .000
GRID = 7.000

RUN NO. 282/ 0 GRADIENT INTERVAL = -5.00/ 5.00

DLT-X	DLT-Z	CN	CA	CLM	CY	CYN	CBL	XCP/L	CPB1	CPB2	CPBC
.633	17.466	-.05991	.10365	-.01079	-.03877	-.00014	.00081	.47998	-.02695	-.02658	-.02581
.539	100.700	-.05368	.09783	-.00507	-.03228	.00085	.00006	.56563	-.02724	-.02683	-.02613
.620	198.760	-.06497	.09322	-.01106	-.03302	-.00124	.00095	.48976	-.02726	-.02681	-.02603
.647	298.330	-.09541	.08876	-.01796	-.03746	-.00109	.00258	.47173	-.02703	-.02655	-.02572
.592	399.100	-.13227	.08804	-.01597	-.03903	-.00106	.00097	.53924	-.02685	-.02643	-.02561
.615	500.010	-.13965	.08894	-.01413	-.03927	-.00100	.00070	.55882	-.02678	-.02637	-.02557
.697	600.150	-.13962	.08908	-.01412	-.03932	-.00100	.00070	.55884	-.02679	-.02644	-.02567
	GRADIENT	.00000	.00000	.00000	.00000	.00000	.00000	.00000	.00000	.00000	.00000

RUN NO. 281/ 0 GRADIENT INTERVAL = -5.00/ 5.00

DLT-X	DLT-Z	CN	CA	CLM	CY	CYN	CBL	XCP/L	CPB1	CPB2	CPBC
200.520	22.218	-.03631	.10285	.00166	-.03118	.00156	-.00035	.70582	-.02704	-.02679	-.02585
200.590	102.090	-.05333	.09445	-.00484	-.03512	.00005	.00071	.56928	-.02755	-.02728	-.02650
200.580	202.190	-.06909	.09307	-.01490	-.03229	-.00213	.00252	.44434	-.02766	-.02739	-.02662
200.650	300.660	-.10986	.08790	-.01823	-.03814	-.00103	.00157	.49405	-.02780	-.02750	-.02677
200.550	400.120	-.13720	.08817	-.01490	-.03911	-.00103	.00083	.55144	-.02785	-.02752	-.02683
200.550	500.140	-.13989	.08903	-.01414	-.03923	-.00099	.00070	.55889	-.02775	-.02740	-.02672
200.490	600.090	-.13971	.08895	-.01412	-.03925	-.00099	.00070	.55892	-.02768	-.02730	-.02661
	GRADIENT	.00000	.00000	.00000	.00000	.00000	.00000	.00000	.00000	.00000	.00000

AEDC VA422(IA17) ORB AND ET SEPARATING(ORB DATA) (RTR244) (24 JUL 75)

REFERENCE DATA

SREF = 2690.0000 SQ.FT. XMRP = 1089.6000 IN. XO
LREF = 1290.3000 IN. YMRP = .0000 IN. YO
BREF = 1290.3000 IN. ZMRP = 375.0000 IN. ZO
SCALE = .0100

PARAMETRIC DATA

DLT-Y = 60.000 ALPHA = -5.000
BETA = 3.000 DLTALF = -10.000
DLTBTA = .000 MACH = 5.930
AILRON = .000 ELEVON = .000
GRID = 7.000

RUN NO. 290/ 0 GRADIENT INTERVAL = -5.00/ 5.00

DLT-X	DLT-Z	CN	CA	CLM	CY	CYN	CBL	XCP/L	CPB1	CPB2	CPBC
.541	402.510	.04882	.08519	-.04234	-.03178	-.00211	.00882	1.52730	-.02101	-.02132	-.01959
.533	496.760	-.09367	.08394	-.02569	-.03747	-.00132	.00203	.38573	-.02099	-.02121	-.01965
.575	593.850	-.13791	.08847	-.01452	-.03906	-.00105	.00075	.55468	-.02034	-.02054	-.01889
.478	750.220	-.13885	.08981	-.01424	-.03918	-.00103	.00069	.55741	-.02086	-.02093	-.01980
.552	800.150	-.13912	.08987	-.01425	-.03919	-.00103	.00069	.55755	-.02160	-.02164	-.02069
	GRADIENT	.00000	.00000	.00000	.00000	.00000	.00000	.00000	.00000	.00000	.00000

RUN NO. 289/ 0 GRADIENT INTERVAL = -5.00/ 5.00

DLT-X	DLT-Z	CN	CA	CLM	CY	CYN	CBL	XCP/L	CPB1	CPB2	CPBC
200.610	402.180	-.04700	.08256	-.03055	-.03589	-.00149	.00360	.01002	-.02502	-.02508	-.02384
200.610	500.510	-.12728	.08579	-.01740	-.03865	-.00115	.00105	.52333	-.02613	-.02610	-.02537
200.500	600.070	-.13924	.08909	-.01419	-.03904	-.00103	.00069	.55811	-.02608	-.02606	-.02543
200.520	750.190	-.13943	.08975	-.01423	-.03922	-.00102	.00069	.55795	-.02556	-.02559	-.02490
200.590	800.130	-.13929	.08975	-.01423	-.03918	-.00102	.00069	.55787	-.02521	-.02524	-.02455
	GRADIENT	.00000	.00000	.00000	.00000	.00000	.00000	.00000	.00000	.00000	.00000

RUN NO. 288/ 0 GRADIENT INTERVAL = -5.00/ 5.00

DLT-X	DLT-Z	CN	CA	CLM	CY	CYN	CBL	XCP/L	CPB1	CPB2	CPBC
400.490	400.270	-.09736	.08545	-.02260	-.03772	-.00123	.00183	.42784	-.02414	-.02422	-.02296
400.460	499.570	-.13619	.08829	-.01494	-.03911	-.00106	.00083	.55031	-.02315	-.02334	-.02192
400.540	600.000	-.13866	.08955	-.01424	-.03914	-.00104	.00069	.55730	-.02288	-.02309	-.02180
400.560	750.220	-.13896	.08967	-.01423	-.03916	-.00102	.00069	.55763	-.02364	-.02377	-.02282
400.510	800.060	-.13919	.08972	-.01423	-.03921	-.00103	.00069	.55776	-.02413	-.02423	-.02338
	GRADIENT	.00000	.00000	.00000	.00000	.00000	.00000	.00000	.00000	.00000	.00000

AEDC VA422(IA17) ORB AND ET SEPARATING(ORB DATA) (RTR248) (24 JUL 75)

REFERENCE DATA

SREF = 2690.0000 SQ.FT. XMRP = 1089.6000 IN. XO
LREF = 1290.3000 IN. YMRP = .0000 IN. YO
BREF = 1290.3000 IN. ZMRP = 375.0000 IN. ZO
SCALE = .0100

PARAMETRIC DATA

DLT-Y = 60.000 ALPHA = -5.000
BETA = 3.000 DLTALF = -20.000
DLTBTA = .000 MACH = 5.930
AILRON = .000 ELEVON = .000
GRID = 7.000

RUN NO. 299/ 0 GRADIENT INTERVAL = -5.00/ 5.00

DLT-X	DLT-Z	CN	CA	CLM	CY	CYN	CBL	XCP/L	CPB1	CPB2	CPBC
.384	800.330	.05705	.08239	-.04342	-.03025	-.00184	.00764	1.42120	-.01439	-.01478	-.01405
.574	896.640	-.09443	.08354	-.02532	-.03709	-.00141	.00184	.39188	-.01470	-.01511	-.01424
.475	1000.000	-.13782	.08843	-.01447	-.03908	-.00107	.00069	.55498	-.01444	-.01484	-.01383
	GRADIENT	.00000	.00000	.00000	.00000	.00000	.00000	.00000	.00000	.00000	.00000

RUN NO. 297/ 0 GRADIENT INTERVAL = -5.00/ 5.00

DLT-X	DLT-Z	CN	CA	CLM	CY	CYN	CBL	XCP/L	CPB1	CPB2	CPBC
200.330	754.870	.10888	.07411	-.05210	-.02732	-.00035	.00719	1.13650	-.00103	-.00151	.00020
200.520	797.220	-.02365	.07848	-.03624	-.03418	-.00185	.00274	-.87215	-.00246	-.00287	-.00143
200.470	898.350	-.13427	.08597	-.01540	-.03888	-.00109	.00082	.54532	-.00339	-.00390	-.00250
200.460	1000.400	-.13861	.08887	-.01428	-.03910	-.00106	.00068	.55700	-.00471	-.00529	-.00428
	GRADIENT	.00000	.00000	.00000	.00000	.00000	.00000	.00000	.00000	.00000	.00000

RUN NO. 296/ 0 GRADIENT INTERVAL = -5.00/ 5.00

DLT-X	DLT-Z	CN	CA	CLM	CY	CYN	CBL	XCP/L	CPB1	CPB2	CPBC
400.510	750.850	-.11028	.07969	-.01943	-.03813	-.00135	.00071	.48380	-.00676	-.00759	-.00558
400.480	800.530	-.12880	.08243	-.01612	-.03813	-.00121	.00107	.53481	-.01087	-.01130	-.01042
400.550	900.330	-.13780	.08723	-.01447	-.03914	-.00107	.00065	.55496	-.01078	-.01103	-.01082
400.500	1000.300	-.13849	.09004	-.01427	-.03922	-.00105	.00069	.55699	-.00797	-.00835	-.00791
	GRADIENT	.00000	.00000	.00000	.00000	.00000	.00000	.00000	.00000	.00000	.00000

AEDC VA422(IA17) ORB AND ET SEPARATING(ORB DATA) (RTR247) (24 JUL 75)

REFERENCE DATA

SREF = 2690.0000 SQ.FT. XMRP = 1089.6000 IN. XO
LREF = 1290.3000 IN. YMRP = .0000 IN. YO
BREF = 1290.3000 IN. ZMRP = 375.0000 IN. ZO
SCALE = .0100

PARAMETRIC DATA

DLT-Y = 60.000 ALPHA = -5.000
BETA = 3.000 DLTALF = .000
DLTBTA = 3.000 MACH = 5.930
AILRON = .000 ELEVON = .000
GRID = 7.000

RUN NO. 312/ 0 GRADIENT INTERVAL = -5.00/ 5.00

DLT-X	DLT-Z	CN	CA	CLM	CY	CYN	CBL	XCP/L	CPB1	CPB2	CPBC
.560	19.403	-.05812	.10606	-.01058	-.04627	-.00078	-.00201	.47805	-.02634	-.02622	-.02548
.564	101.640	-.04305	.09994	-.00587	-.03911	-.00017	-.00118	.52363	-.02657	-.02647	-.02578
.696	202.190	-.05849	.09596	-.01129	-.03559	-.00121	-.00006	.46705	-.02678	-.02666	-.02608
.668	301.270	-.09331	.09036	-.01799	-.03770	-.00111	.00190	.46723	-.02684	-.02671	-.02618
.649	400.280	-.13097	.08951	-.01630	-.03888	-.00114	.00092	.53554	-.02683	-.02668	-.02622
.709	500.320	-.13922	.09058	-.01427	-.03911	-.00108	.00069	.55746	-.02670	-.02656	-.02613
.570	600.140	-.13921	.09075	-.01426	-.03915	-.00108	.00069	.55740	-.02645	-.02631	-.02591
	GRADIENT	.00000	.00000	.00000	.00000	.00000	.00000	.00000	.00000	.00000	.00000

RUN NO. 313/ 0 GRADIENT INTERVAL = -5.00/ 5.00

DLT-X	DLT-Z	CN	CA	CLM	CY	CYN	CBL	XCP/L	CPB1	CPB2	CPBC
200.400	23.080	-.02504	.10656	.00082	-.04015	.00020	-.00229	.69293	-.02701	-.02668	-.02617
200.470	98.046	-.04775	.09545	-.00400	-.03936	-.00015	-.00024	.57618	-.02725	-.02684	-.02630
200.600	198.290	-.06080	.09419	-.01455	-.03386	-.00200	.00177	.42067	-.02687	-.02643	-.02567
200.590	297.990	-.10610	.08943	-.01850	-.03833	-.00110	.00140	.48559	-.02657	-.02615	-.02541
200.620	399.540	-.13601	.08956	-.01518	-.03914	-.00112	.00083	.54840	-.02646	-.02610	-.02536
200.600	500.160	-.13903	.09033	-.01419	-.03915	-.00108	.00069	.55792	-.02639	-.02607	-.02533
200.600	600.050	-.13914	.09036	-.01418	-.03919	-.00107	.00069	.55805	-.02647	-.02618	-.02548
	GRADIENT	.00000	.00000	.00000	.00000	.00000	.00000	.00000	.00000	.00000	.00000

AEDC VA422(IA17) ORB AND ET SEPARATING(ORB DATA) (RTR248) (24 JUL 75)

REFERENCE DATA

SREF = 2890.0000 SQ.FT. XMRP = 1089.6000 IN. XO
LREF = 1290.3000 IN. YMRP = .0000 IN. YO
BREF = 1290.3000 IN. ZMRP = 375.0000 IN. ZO
SCALE = .0100

PARAMETRIC DATA

DLT-Y = 60.000 ALPHA = -5.000
BETA = 3.000 DLTALF = -10.000
DLTBTA = 3.000 MACH = 5.930
AILRON = .000 ELEVON = .000
GRID = 7.000

RUN NO. 306/ 0 GRADIENT INTERVAL = -5.00/ 5.00

DLT-X	DLT-Z	CN	CA	CLM	CY	CYN	CBL	XCP/L	CPB1	CPB2	CPBC
.538	404.140	.06122	.08561	-.04409	-.03645	-.00128	.00252	1.38010	-.02253	-.02250	-.02155
.455	500.820	-.08944	.08369	-.02692	-.03815	-.00128	.00132	.35898	-.02361	-.02349	-.02292
.455	600.230	-.13777	.08863	-.01454	-.03909	-.00108	.00074	.55448	-.02404	-.02389	-.02361
.590	750.180	-.13897	.09067	-.01427	-.03915	-.00106	.00069	.55731	-.02340	-.02323	-.02312
.553	801.090	-.13886	.09064	-.01426	-.03915	-.00107	.00069	.55729	-.02279	-.02263	-.02251
	GRADIENT	.00000	.00000	.00000	.00000	.00000	.00000	.00000	.00000	.00000	.00000

RUN NO. 307/ 0 GRADIENT INTERVAL = -5.00/ 5.00

DLT-X	DLT-Z	CN	CA	CLM	CY	CYN	CBL	XCP/L	CPB1	CPB2	CPBC
200.560	397.950	-.03513	.08276	-.03342	-.03737	-.00128	.00216	-.29150	-.02179	-.02179	-.02071
200.490	498.510	-.12445	.08672	-.01810	-.03884	-.00119	.00095	.51455	-.02007	-.02024	-.01848
200.540	600.020	-.13864	.08992	-.01428	-.03921	-.00109	.00069	.55698	-.01886	-.01909	-.01737
200.590	750.190	-.13871	.09071	-.01429	-.03926	-.00107	.00069	.55697	-.01986	-.02001	-.01897
200.460	800.120	-.13893	.09076	-.01430	-.03924	-.00107	.00069	.55709	-.02083	-.02086	-.02005
	GRADIENT	.00000	.00000	.00000	.00000	.00000	.00000	.00000	.00000	.00000	.00000

RUN NO. 308/ 0 GRADIENT INTERVAL = -5.00/ 5.00

DLT-X	DLT-Z	CN	CA	CLM	CY	CYN	CBL	XCP/L	CPB1	CPB2	CPBC
400.410	401.260	-.09371	.08600	-.02326	-.03816	-.00122	.00143	.41181	-.02472	-.02466	-.02405
400.370	500.450	-.13567	.08902	-.01521	-.03905	-.00110	.00080	.54791	-.02478	-.02468	-.02427
400.480	600.160	-.13885	.09055	-.01426	-.03912	-.00107	.00069	.55728	-.02438	-.02429	-.02388
400.480	750.140	-.13909	.09076	-.01428	-.03918	-.00106	.00069	.55730	-.02340	-.02333	-.02286
400.560	800.090	-.13913	.09082	-.01430	-.03923	-.00107	.00069	.55726	-.02285	-.02279	-.02226
	GRADIENT	.00000	.00000	.00000	.00000	.00000	.00000	.00000	.00000	.00000	.00000

AEDC VA422(IA17) ORB AND ET SEPARATING(ORB DATA) (RTR250) (24 JUL 75)

REFERENCE DATA

SREF = 2690.0000 SQ.FT. XMRP = 1089.6000 IN. XO
LREF = 1290.3000 IN. YMRP = .0000 IN. YO
BREF = 1290.3000 IN. ZMRP = 375.0000 IN. ZO
SCALE = .0100

PARAMETRIC DATA

DLT-Y = 60.000 ALPHA = -5.000
BETA = 3.000 DLTALF = -20.000
DLTBTA = 3.000 MACH = 5.930
AILRON = .000 ELEVON = .000
GRID = 7.000

RUN NO. 304/ 0 GRADIENT INTERVAL = -5.00/ 5.00

DLT-X	DLT-Z	CN	CA	CLM	CY	CYN	CBL	XCP/L	CPB1	CPB2	CPBC
.548	804.040	.08053	.08207	-.04381	-.03371	-.00098	.00321	1.38370	-.01695	-.01714	-.01612
.427	900.970	-.08279	.08282	-.02754	-.03874	-.00128	.00080	.32730	-.01763	-.01769	-.01697
.482	1000.400	-.13809	.08807	-.01440	-.03914	-.00109	.00066	.55572	-.01803	-.01797	-.01750
	GRADIENT	.00000	.00000	.00000	.00000	.00000	.00000	.00000	.00000	.00000	.00000

RUN NO. 300/ 0 GRADIENT INTERVAL = -5.00/ 5.00

DLT-X	DLT-Z	CN	CA	CLM	CY	CYN	CBL	XCP/L	CPB1	CPB2	CPBC
200.370	754.220	.13639	.07332	-.05482	-.03214	.00172	.00073	1.06200	-.01474	-.01521	-.01354
200.470	802.470	-.01806	.07793	-.03730	-.03615	-.00134	.00085	-1.40520	-.01651	-.01685	-.01562
200.540	900.450	-.13654	.08612	-.01484	-.03911	-.00109	.00066	.55135	-.01787	-.01817	-.01740
200.350	1000.400	-.13842	.08834	-.01424	-.03918	-.00109	.00068	.55711	-.01781	-.01807	-.01743
	GRADIENT	.00000	.00000	.00000	.00000	.00000	.00000	.00000	.00000	.00000	.00000

RUN NO. 301/ 0 GRADIENT INTERVAL = -5.00/ 5.00

DLT-X	DLT-Z	CN	CA	CLM	CY	CYN	CBL	XCP/L	CPB1	CPB2	CPBC
400.450	746.870	-.02187	.07248	-.03259	-.03499	-.00068	.00072	-.83056	-.00817	-.00931	-.00560
400.560	798.480	-.11682	.08154	-.01757	-.03916	-.00129	.00024	.50961	-.00216	-.00388	.00115
400.390	899.970	-.13744	.08723	-.01458	-.03924	-.00107	.00062	.55393	-.00009	-.00160	.00223
400.340	1000.400	-.13830	.09014	-.01425	-.03928	-.00107	.00069	.55696	-.00290	-.00396	-.00160
	GRADIENT	.00000	.00000	.00000	.00000	.00000	.00000	.00000	.00000	.00000	.00000

AEDC VA422(IA17) ORB AND ET SEPARATING(ORB DATA) (RTR251) (24 JUL 75)

REFERENCE DATA

SREF = 2690.0000 SQ.FT. XMRP = 1089.6000 IN. XO
LREF = 1290.3000 IN. YMRP = .0000 IN. YO
BREF = 1290.3000 IN. ZMRP = 375.0000 IN. ZO
SCALE = .0100

PARAMETRIC DATA

DLT-Y = 60.000 ALPHA = -10.000
BETA = 3.000 DLTALF = .000
DLTBTA = .000 MACH = 5.930
AILRON = .000 ELEVON = .000
GRID = 8.000

RUN NO. 321/ 0 GRADIENT INTERVAL = -5.00/ 5.00

DLT-X	DLT-Z	CN	CA	CLM	CY	CYN	CBL	XCP/L	CPB1	CPB2	CPBC
.554	28.971	-.09295	.12259	-.00794	-.03139	.00168	.00275	.57461	-.01980	-.01990	-.01886
.537	98.805	-.11087	.10773	-.01202	-.03262	.00115	.00327	.55155	-.02044	-.02045	-.01940
.670	197.700	-.15633	.10042	-.01834	-.04097	-.00036	.00381	.54267	-.02007	-.02012	-.01893
.512	298.190	-.19806	.09858	-.02072	-.04369	-.00025	.00225	.55539	-.01938	-.01951	-.01827
.563	399.940	-.21368	.09944	-.01811	-.04428	-.00018	.00178	.57526	-.01917	-.01937	-.01820
.607	500.120	-.21440	.10006	-.01798	-.04432	-.00017	.00183	.57615	-.01945	-.01967	-.01863
	GRADIENT	.00000	.00000	.00000	.00000	.00000	.00000	.00000	.00000	.00000	.00000

RUN NO. 320/ 0 GRADIENT INTERVAL = -5.00/ 5.00

DLT-X	DLT-Z	CN	CA	CLM	CY	CYN	CBL	XCP/L	CPB1	CPB2	CPBC
200.410	32.961	-.08465	.11276	-.00244	-.02944	.00285	.00368	.63114	-.01969	-.01996	-.01862
200.480	103.020	-.12001	.10458	-.01089	-.03447	-.00048	.00232	.56922	-.02063	-.02085	-.01967
200.520	201.830	-.16355	.09957	-.02031	-.04269	-.00012	.00298	.53584	-.02108	-.02119	-.02017
200.530	300.540	-.20259	.09852	-.02037	-.04394	-.00025	.00216	.55946	-.02123	-.02126	-.02038
200.450	400.100	-.21389	.09969	-.01808	-.04430	-.00017	.00180	.57549	-.02090	-.02088	-.02004
200.400	500.090	-.21435	.10014	-.01800	-.04444	-.00017	.00183	.57603	-.02025	-.02028	-.01933
	GRADIENT	.00000	.00000	.00000	.00000	.00000	.00000	.00000	.00000	.00000	.00000

AEDC VA422(IA17) ORB AND ET SEPARATING(ORB DATA) (RTR252) (24 JUL 75)

REFERENCE DATA

SREF = 2890.0000 SQ.FT. XMRP = 1089.6000 IN. XO
LREF = 1290.3000 IN. YMRP = .0000 IN. YO
BREF = 1290.3000 IN. ZMRP = 375.0000 IN. ZO
SCALE = .0100

PARAMETRIC DATA

DLT-Y = 60.000 ALPHA = -10.000
BETA = 3.000 DLTALF = -10.000
DLTBTA = .000 MACH = 5.930
AILRON = .000 ELEVON = .000
GRID = 8.000

RUN NO. 329/ 0 GRADIENT INTERVAL = -5.00/ 5.00

DLT-X	DLT-Z	CN	CA	CLM	CY	CYN	CBL	XCP/L	CPB1	CPB2	CPBC
.418	402.580	-.02497	.09546	-.04872	-.03750	-.00108	.00908	-1.29110	-.01142	-.01143	-.00983
.468	497.530	-.12178	.09137	-.03911	-.04168	-.00090	.00435	.33882	-.01214	-.01222	-.01077
.402	599.300	-.20080	.09625	-.02088	-.04387	-.00028	.00188	.55604	-.01152	-.01163	-.01001
.470	700.090	-.21092	.09963	-.01858	-.04427	-.00019	.00167	.57192	-.01090	-.01098	-.00944
.605	800.200	-.21356	.10088	-.01815	-.04425	-.00019	.00162	.57500	-.01205	-.01212	-.01108
	GRADIENT	.00000	.00000	.00000	.00000	.00000	.00000	.00000	.00000	.00000	.00000

RUN NO. 328/ 0 GRADIENT INTERVAL = -5.00/ 5.00

DLT-X	DLT-Z	CN	CA	CLM	CY	CYN	CBL	XCP/L	CPB1	CPB2	CPBC
200.490	401.860	-.11317	.09112	-.04007	-.04097	-.00062	.00473	.30597	-.01394	-.01373	-.01191
200.560	500.730	-.20020	.09495	-.02068	-.04390	-.00029	.00189	.55669	-.01687	-.01677	-.01559
200.350	600.470	-.20803	.09692	-.01888	-.04428	-.00021	.00169	.56923	-.01865	-.01849	-.01809
200.480	700.200	-.21226	.10005	-.01833	-.04434	-.00018	.00173	.57364	-.01812	-.01791	-.01771
200.530	800.290	-.21376	.10065	-.01810	-.04440	-.00019	.00183	.57533	-.01700	-.01681	-.01656
	GRADIENT	.00000	.00000	.00000	.00000	.00000	.00000	.00000	.00000	.00000	.00000

RUN NO. 327/ 0 GRADIENT INTERVAL = -5.00/ 5.00

DLT-X	DLT-Z	CN	CA	CLM	CY	CYN	CBL	XCP/L	CPB1	CPB2	CPBC
400.500	400.320	-.16628	.09472	-.02845	-.04266	-.00047	.00329	.48890	-.01426	-.01423	-.01283
400.410	499.650	-.20864	.09790	-.01905	-.04427	-.00021	.00182	.56866	-.01277	-.01274	-.01131
400.460	600.240	-.20720	.09865	-.01891	-.04444	-.00019	.00148	.56876	-.01248	-.01243	-.01125
400.370	700.080	-.21335	.10055	-.01810	-.04420	-.00019	.00181	.57518	-.01313	-.01304	-.01217
400.470	800.210	-.21352	.10061	-.01810	-.04433	-.00019	.00182	.57523	-.01461	-.01448	-.01395
	GRADIENT	.00000	.00000	.00000	.00000	.00000	.00000	.00000	.00000	.00000	.00000

ORIGINAL PAGE IS OF POOR QUALITY

AEDC VA422(IA17) ORB AND ET SEPARATING(ORB DATA) (RTR253) (24 JUL 75)

REFERENCE DATA

SREF = 2690.0000 SQ.FT. XMRP = 1089.8000 IN. XO
LREF = 1290.3000 IN. YMRP = .0000 IN. YO
BREF = 1290.3000 IN. ZMRP = 375.0000 IN. ZO
SCALE = .0100

PARAMETRIC DATA

DLT-Y = 60.000 ALPHA = -10.000
BETA = 3.000 DLTALF = .000
DLTBTA = 3.000 MACH = 5.930
AILRON = .000 ELEVON = .000
GRID = 8.000

RUN NO. 339/ 0 GRADIENT INTERVAL = -5.00/ 5.00

DLT-X	DLT-Z	CN	CA	CLM	CY	CYN	CBL	XCP/L	CPB1	CPB2	CPBC
.586	31.770	-.08222	.12429	-.00821	-.04143	.00028	-.00031	.56012	-.01843	-.01854	-.01778
.472	102.830	-.09964	.10847	-.01319	-.04023	.00093	.00157	.52766	-.01839	-.01846	-.01763
.483	202.210	-.15345	.10099	-.01826	-.04200	-.00027	.00320	.54098	-.01989	-.01980	-.01939
.522	300.550	-.19589	.09968	-.02115	-.04385	-.00029	.00218	.55204	-.02001	-.01976	-.01961
.546	400.170	-.21300	.10045	-.01830	-.04434	-.00022	.00177	.57406	-.01966	-.01931	-.01933
.471	500.210	-.21373	.10120	-.01813	-.04440	-.00021	.00182	.57517	-.01813	-.01777	-.01780
	GRADIENT	.00000	.00000	.00000	.00000	.00000	.00000	.00000	.00000	.00000	.00000

RUN NO. 340/ 0 GRADIENT INTERVAL = -5.00/ 5.00

DLT-X	DLT-Z	CN	CA	CLM	CY	CYN	CBL	XCP/L	CPB1	CPB2	CPBC
200.590	31.452	-.07222	.11409	-.00179	-.03961	.00230	.00160	.63526	-.02096	-.02078	-.02003
200.530	97.397	-.11104	.10651	-.00931	-.03900	-.00008	.00111	.57613	-.01980	-.01972	-.01845
200.540	197.180	-.15821	.10038	-.01970	-.04287	-.00016	.00274	.53551	-.01790	-.01785	-.01654
200.450	298.450	-.20041	.09912	-.02072	-.04395	-.00029	.00213	.55661	-.01771	-.01785	-.01661
200.650	399.850	-.21326	.10031	-.01815	-.04422	-.00021	.00178	.57490	-.01780	-.01800	-.01685
200.490	500.180	-.21414	.10089	-.01805	-.04435	-.00022	.00182	.57572	-.01836	-.01857	-.01760
	GRADIENT	.00000	.00000	.00000	.00000	.00000	.00000	.00000	.00000	.00000	.00000

AEDC VA422(IA17) ORB AND ET SEPARATING(ORB DATA) (RTR254) (24 JUL 75)

REFERENCE DATA

SREF = 2690.0000 SQ.FT. XMRP = 1089.6000 IN. XO
LREF = 1290.3000 IN. YMRP = .0000 IN. YO
BREF = 1290.3000 IN. ZMRP = 375.0000 IN. ZO
SCALE = .0100

PARAMETRIC DATA

DLT-Y = 60.000 ALPHA = -10.000
BETA = 3.000 DLTALF = -10.000
DLTBTA = 3.000 MACH = 5.930
AILRON = .000 ELEVON = .000
GRID = 8.000

RUN NO. 333/ 0 GRADIENT INTERVAL = -5.00/ 5.00

DLT-X	DLT-Z	CN	CA	CLM	CY	CYN	CBL	XCP/L	CPB1	CPB2	CPBC
.524	403.780	.00300	.09649	-.04972	-.04355	-.00021	.00178	.00000	-.01047	-.01071	-.01005
.533	501.740	-.10254	.09080	-.04192	-.04373	-.00044	.00247	.25117	-.01062	-.01091	-.01024
.515	600.610	-.19347	.09554	-.02210	-.04441	-.00029	.00155	.54576	-.01130	-.01151	-.01135
.508	700.270	-.21077	.09935	-.01858	-.04428	-.00021	.00167	.57186	-.01035	-.01046	-.01057
.916	800.710	-.21352	.10097	-.01815	-.04432	-.00021	.00182	.57502	-.00594	-.00615	-.00606
	GRADIENT	.00000	.00000	.00000	.00000	.00000	.00000	.00000	.00000	.00000	.00000

RUN NO. 334/ 0 GRADIENT INTERVAL = -5.00/ 5.00

DLT-X	DLT-Z	CN	CA	CLM	CY	CYN	CBL	XCP/L	CPB1	CPB2	CPBC
200.500	397.560	-.09652	.09133	-.04365	-.04284	-.00028	.00294	.20771	-.01216	-.01242	-.01168
200.420	498.870	-.19870	.09534	-.02117	-.04432	-.00032	.00166	.55240	-.01060	-.01102	-.00958
200.350	599.990	-.20812	.09699	-.01895	-.04440	-.00023	.00161	.56893	-.00822	-.00880	-.00681
200.460	700.190	-.21024	.10004	-.01858	-.04441	-.00021	.00163	.57165	-.00775	-.00823	-.00653
200.530	800.190	-.21329	.10109	-.01815	-.04435	-.00021	.00182	.57493	-.00968	-.01004	-.00898
	GRADIENT	.00000	.00000	.00000	.00000	.00000	.00000	.00000	.00000	.00000	.00000

RUN NO. 335/ 0 GRADIENT INTERVAL = -5.00/ 5.00

DLT-X	DLT-Z	CN	CA	CLM	CY	CYN	CBL	XCP/L	CPB1	CPB2	CPBC
400.480	401.120	-.16022	.09410	-.02982	-.04330	-.00047	.00265	.47391	-.01503	-.01502	-.01389
400.450	500.620	-.20601	.09706	-.01932	-.04433	-.00024	.00169	.56622	-.01672	-.01673	-.01610
400.410	600.840	-.20596	.09864	-.01894	-.04464	-.00022	.00144	.56803	-.01714	-.01716	-.01689
400.470	700.460	-.21237	.10062	-.01836	-.04439	-.00021	.00174	.57354	-.01621	-.01621	-.01603
400.460	800.080	-.21360	.10112	-.01813	-.04433	-.00021	.00182	.57511	-.01470	-.01476	-.01447
	GRADIENT	.00000	.00000	.00000	.00000	.00000	.00000	.00000	.00000	.00000	.00000

AEDC VA422(IA17) ORB AND ET SEPARATING(ORB DATA) (RTR255) (24 JUL 75)

REFERENCE DATA

SREF = 2690.0000 SQ.FT. XMRP = 1089.6000 IN. XO
LREF = 1290.3000 IN. YMRP = .0000 IN. YO
BREF = 1290.3000 IN. ZMRP = 375.0000 IN. ZO
SCALE = .0100

PARAMETRIC DATA

DLT-Y = 60.000 ALPHA = -10.000
BETA = .000 DLTALF = .000
DLTBTA = .000 MACH = 5.930
AILRON = .000 ELEVON = .000
GRID = 9.000

RUN NO. 349/ 0 GRADIENT INTERVAL = -5.00/ 5.00

DLT-X	DLT-Z	CN	CA	CLM	CY	CYN	CBL	XCP/L	CPB1	CPB2	CPBC
.436	28.646	-.09962	.12239	-.00933	.01980	.00226	.00127	.56631	-.02103	-.01955	-.01910
.434	99.386	-.10851	.10706	-.01172	.01288	.00201	.00204	.55196	-.02177	-.02016	-.01974
.509	197.710	-.15252	.09954	-.01753	.00358	.00018	.00088	.54508	-.02176	-.02011	-.01950
.448	297.990	-.19615	.09819	-.02078	.00243	.00026	-.00018	.55407	-.02116	-.01960	-.01885
.423	399.720	-.21296	.09871	-.01795	.00231	.00028	-.00029	.57570	-.02087	-.01942	-.01873
.511	500.180	-.21370	.09954	-.01784	.00222	.00027	-.00030	.57652	-.02088	-.01949	-.01892
	GRADIENT	.00000	.00000	.00000	.00000	.00000	.00000	.00000	.00000	.00000	.00000

RUN NO. 348/ 0 GRADIENT INTERVAL = -5.00/ 5.00

DLT-X	DLT-Z	CN	CA	CLM	CY	CYN	CBL	XCP/L	CPB1	CPB2	CPBC
200.430	32.716	-.08438	.11252	-.00256	.02197	.00409	.00300	.62961	-.02017	-.01926	-.01850
200.440	102.840	-.11808	.10475	-.01067	.00957	.00012	.00013	.56964	-.02092	-.02015	-.01955
200.520	201.890	-.16167	.09904	-.01971	.00292	.00034	.00006	.53811	-.02124	-.02050	-.02005
200.480	300.560	-.20136	.09807	-.02029	.00244	.00026	-.00022	.55923	-.02126	-.02058	-.02024
200.510	400.150	-.21351	.09909	-.01793	.00217	.00026	-.00031	.57603	-.02097	-.02034	-.02001
200.390	500.150	-.21358	.09946	-.01784	.00227	.00027	-.00030	.57647	-.02041	-.01976	-.01940
	GRADIENT	.00000	.00000	.00000	.00000	.00000	.00000	.00000	.00000	.00000	.00000

RUN NO. 347/ 0 GRADIENT INTERVAL = -5.00/ 5.00

DLT-X	DLT-Z	CN	CA	CLM	CY	CYN	CBL	XCP/L	CPB1	CPB2	CPBC
400.510	29.802	-.08696	.10871	-.00132	.01379	.00190	.00206	.64477	-.01950	-.01862	-.01761
400.510	100.120	-.11051	.10450	-.01337	.00933	-.00094	.00123	.53898	-.01826	-.01745	-.01634
400.470	197.200	-.16612	.09840	-.02091	.00287	.00036	-.00018	.53411	-.01762	-.01695	-.01585
400.350	298.740	-.20479	.09785	-.01977	.00245	.00026	-.00021	.56347	-.01774	-.01705	-.01610
400.430	399.920	-.21331	.09903	-.01787	.00230	.00027	-.00030	.57622	-.01807	-.01733	-.01654
400.320	500.140	-.21365	.09943	-.01784	.00222	.00026	-.00030	.57649	-.01869	-.01795	-.01734
	GRADIENT	.00000	.00000	.00000	.00000	.00000	.00000	.00000	.00000	.00000	.00000

AEDC VA422(IA17) ORB AND ET SEPARATING(ORB DATA) (RTR256) (24 JUL 75)

REFERENCE DATA

SREF = 2690.0000 SQ.FT. XMRP = 1089.6000 IN. XO
LREF = 1290.3000 IN. YMRP = .0000 IN. YO
BREF = 1290.3000 IN. ZMRP = 375.0000 IN. ZO
SCALE = .0100

PARAMETRIC DATA

DLT-Y = 60.000 ALPHA = -10.000
BETA = .000 DLTALF = -10.000
DLTBTA = .000 MACH = 5.930
AILRON = .000 ELEVON = .000
GRID = 9.000

RUN NO. 357/ 0 GRADIENT INTERVAL = -5.00/ 5.00

DLT-X	DLT-Z	CN	CA	CLM	CY	CYN	CBL	XCP/L	CPB1	CPB2	CPBC
.378	402.670	-.03007	.09582	-.04599	.00698	-.00044	.00462	-.86918	-.01405	-.01326	-.01213
.466	500.450	-.12324	.09174	-.03890	.00495	-.00009	.00113	.34432	-.01436	-.01352	-.01236
.388	599.350	-.19614	.09625	-.02182	.00286	.00025	.00041	.54876	-.01367	-.01285	-.01152
.431	699.970	-.21156	.09951	-.01831	.00226	.00026	-.00028	.57343	-.01314	-.01237	-.01110
.418	800.170	-.21282	.10046	-.01802	.00215	.00024	-.00030	.57533	-.01406	-.01330	-.01247
	GRADIENT	.00000	.00000	.00000	.00000	.00000	.00000	.00000	.00000	.00000	.00000

RUN NO. 358/ 0 GRADIENT INTERVAL = -5.00/ 5.00

DLT-X	DLT-Z	CN	CA	CLM	CY	CYN	CBL	XCP/L	CPB1	CPB2	CPBC
200.420	401.830	-.11307	.09167	-.03952	.00472	-.00007	.00135	.31050	-.01665	-.01585	-.01444
200.390	500.870	-.19836	.09496	-.02084	.00279	.00027	.00028	.55496	-.01965	-.01892	-.01810
200.310	600.420	-.20857	.09742	-.01872	.00222	.00024	-.00024	.57026	-.02101	-.02037	-.02014
200.460	700.250	-.21292	.09975	-.01806	.00226	.00025	-.00030	.57520	-.02080	-.02019	-.02011
200.430	800.230	-.21324	.10032	-.01797	.00218	.00025	-.00030	.57572	-.02021	-.01981	-.01953
	GRADIENT	.00000	.00000	.00000	.00000	.00000	.00000	.00000	.00000	.00000	.00000

RUN NO. 355/ 0 GRADIENT INTERVAL = -5.00/ 5.00

DLT-X	DLT-Z	CN	CA	CLM	CY	CYN	CBL	XCP/L	CPB1	CPB2	CPBC
400.390	400.330	-.16410	.09439	-.02844	.00321	.00019	.00037	.48669	-.01341	-.01268	-.01099
400.410	499.480	-.20906	.09789	-.01877	.00227	.00024	-.00022	.57021	-.01236	-.01163	-.01001
400.390	600.150	-.21119	.09892	-.01830	.00223	.00025	-.00028	.57337	-.01246	-.01172	-.01048
400.390	700.260	-.21264	.10013	-.01799	.00224	.00025	-.00030	.57542	-.01349	-.01271	-.01188
400.400	800.240	-.21291	.10024	-.01798	.00215	.00024	-.00030	.57553	-.01499	-.01424	-.01374
	GRADIENT	.00000	.00000	.00000	.00000	.00000	.00000	.00000	.00000	.00000	.00000

ORIGINAL PAGE IS OF POOR QUALITY

AEDC VA422(IA17) ORB AND ET SEPARATING(ORB DATA) (RTR257) (24 JUL 75)

REFERENCE DATA

SREF = 2690.0000 SQ.FT. XMRP = 1089.6000 IN. XO
LREF = 1290.3000 IN. YMRP = .0000 IN. YO
BREF = 1290.3000 IN. ZMRP = 375.0000 IN. ZO
SCALE = .0100

PARAMETRIC DATA

DLT-Y = 60.000 ALPHA = -10.000
BETA = .000 DLTALF = .000
DLTBTA = 3.000 MACH = 5.930
AILRON = .000 ELEVON = .000
GRID = 9.000

RUN NO. 367/ 0 GRADIENT INTERVAL = -5.00/ 5.00

DLT-X	DLT-Z	CN	CA	CLM	CY	CYN	CBL	XCP/L	CPB1	CPB2	CPBC
.370	31.559	-.08529	.12425	-.00871	.00910	.00138	-.00108	.55707	-.02132	-.02061	-.01994
.484	102.840	-.10427	.10777	-.01193	.00572	.00144	.00009	.54563	-.02182	-.02113	-.02049
.514	202.320	-.15301	.10062	-.01794	.00256	.00023	.00009	.54277	-.02263	-.02190	-.02149
.597	300.590	-.19556	.09960	-.02099	.00220	.00022	-.00029	.55268	-.02296	-.02229	-.02204
.519	400.140	-.21256	.10009	-.01813	.00212	.00023	-.00030	.57469	-.02305	-.02242	-.02229
.440	500.240	-.21324	.10092	-.01803	.00207	.00022	-.00031	.57547	-.02280	-.02215	-.02207
	GRADIENT	.00000	.00000	.00000	.00000	.00000	.00000	.00000	.00000	.00000	.00000

RUN NO. 368/ 0 GRADIENT INTERVAL = -5.00/ 5.00

DLT-X	DLT-Z	CN	CA	CLM	CY	CYN	CBL	XCP/L	CPB1	CPB2	CPBC
200.370	31.606	-.07616	.11403	-.00062	.00982	.00301	.00068	.65187	-.02350	-.02210	-.02152
200.450	100.270	-.11316	.10705	-.00973	.00545	.00055	-.00077	.57403	-.02144	-.02002	-.01866
200.520	197.480	-.15807	.10023	-.01918	.00245	.00028	-.00023	.53867	-.02000	-.01872	-.01729
200.490	298.400	-.19987	.09904	-.02048	.00226	.00023	-.00027	.55752	-.01956	-.01840	-.01717
200.510	399.780	-.21301	.09999	-.01801	.00211	.00023	-.00030	.57545	-.01956	-.01843	-.01739
200.490	500.200	-.21354	.10058	-.01795	.00217	.00023	-.00030	.57594	-.01988	-.01878	-.01796
	GRADIENT	.00000	.00000	.00000	.00000	.00000	.00000	.00000	.00000	.00000	.00000

AEDC VA422(1A17) ORB AND ET SEPARATING(ORB DATA) (RTR258) (24 JUL 75)

REFERENCE DATA

SREF = 2890.0000 SQ.FT. XMRP = 1089.6000 IN. XO
LREF = 1290.3000 IN. YMRP = .0000 IN. YO
BREF = 1290.3000 IN. ZMRP = 375.0000 IN. ZO
SCALE = .0100

PARAMETRIC DATA

DLT-Y = 80.000 ALPHA = -10.000
BETA = .000 DLTALF = -10.000
DLTBTA = 3.000 MACH = 5.930
AILRON = .000 ELEVON = .000
GRID = 9.000

RUN NO. 361/ 0 GRADIENT INTERVAL = -5.00/ 5.00

DLT-X	DLT-Z	CN	CA	CLM	CY	CYN	CBL	XCP/L	CPB1	CPB2	CPBC
.476	403.570	-.01628	.09609	-.04820	.00183	.00042	-.00119	-2.30080	-.01233	-.01189	-.01138
.374	501.500	-.11198	.09127	-.04099	.00122	.00010	-.00101	.29400	-.01245	-.01197	-.01160
.396	600.470	-.19945	.09604	-.02116	.00209	.00025	-.00022	.55390	-.01316	-.01254	-.01277
.449	700.270	-.21180	.09962	-.01823	.00210	.00023	-.00031	.57395	-.01204	-.01144	-.01185
.734	800.680	-.21279	.10058	-.01802	.00202	.00022	-.00030	.57530	-.00813	-.00756	-.00779
	GRADIENT	.00000	.00000	.00000	.00000	.00000	.00000	.00000	.00000	.00000	.00000

RUN NO. 362/ 0 GRADIENT INTERVAL = -5.00/ 5.00

DLT-X	DLT-Z	CN	CA	CLM	CY	CYN	CBL	XCP/L	CPB1	CPB2	CPBC
200.420	397.980	-.10234	.09172	-.04179	.00266	.00030	-.00026	.25163	-.01396	-.01344	-.01280
200.410	498.680	-.19853	.09567	-.02144	.00205	.00023	-.00033	.55202	-.01256	-.01221	-.01085
200.290	600.110	-.20840	.09735	-.01876	.00207	.00025	-.00033	.56997	-.01064	-.01032	-.00867
200.450	700.080	-.21216	.10013	-.01815	.00210	.00024	-.00030	.57443	-.01032	-.00992	-.00863
200.440	800.150	-.21282	.10083	-.01805	.00207	.00023	-.00030	.57521	-.01190	-.01143	-.01069
	GRADIENT	.00000	.00000	.00000	.00000	.00000	.00000	.00000	.00000	.00000	.00000

RUN NO. 363/ 0 GRADIENT INTERVAL = -5.00/ 5.00

DLT-X	DLT-Z	CN	CA	CLM	CY	CYN	CBL	XCP/L	CPB1	CPB2	CPBC
400.360	401.220	-.16207	.09467	-.02919	.00247	.00025	-.00006	.47986	-.01751	-.01692	-.01634
400.440	500.690	-.20868	.09798	-.01885	.00221	.00023	-.00028	.56969	-.01835	-.01778	-.01756
400.470	600.690	-.21160	.09936	-.01835	.00215	.00024	-.00030	.57327	-.01813	-.01762	-.01756
400.350	700.360	-.21302	.10071	-.01804	.00219	.00023	-.00030	.57531	-.01719	-.01666	-.01661
400.460	800.140	-.21295	.10076	-.01802	.00224	.00024	-.00030	.57538	-.01594	-.01543	-.01529
	GRADIENT	.00000	.00000	.00000	.00000	.00000	.00000	.00000	.00000	.00000	.00000

AEDC VA422(IA17) ORB AND ET SEPARATING(ORB DATA) (RTR259) (24 JUL 75)

REFERENCE DATA

SREF = 2690.0000 SQ.FT. XMRP = 1089.6000 IN. XO
LREF = 1290.3000 IN. YMRP = .0000 IN. YO
BREF = 1290.3000 IN. ZMRP = 375.0000 IN. ZO
SCALE = .0100

PARAMETRIC DATA

DLT-Y = 60.000 ALPHA = -10.000
BETA = .000 DLTALF = .000
DLTBTA = 3.000 MACH = 5.930
AILRON = .000 ELEVON = -20.000
GRID = 10.000

RUN NO. 393/ 0 GRADIENT INTERVAL = -5.00/ 5.00

DLT-X	DLT-Z	CN	CA	CLM	CY	CYN	CBL	XCP/L	CPB1	CPB2	CPBC
.410	31.483	-.12217	.13259	-.00074	.00932	.00154	-.00115	.65395	-.01974	-.01864	-.01741
.500	102.750	-.14569	.11788	-.00238	.00549	.00148	-.00005	.64369	-.02004	-.01903	-.01770
.542	202.350	-.19499	.11171	-.00823	.00234	.00010	-.00044	.61777	-.02058	-.01953	-.01830
.495	300.660	-.23623	.11047	-.01181	.00215	.00012	-.00076	.61002	-.02053	-.01961	-.01849
.520	400.150	-.25322	.11156	-.00907	.00207	.00010	-.00078	.62418	-.02003	-.01920	-.01815
.443	500.170	-.25366	.11211	-.00897	.00202	.00010	-.00078	.62464	-.01925	-.01845	-.01742
	GRADIENT	.00000	.00000	.00000	.00000	.00000	.00000	.00000	.00000	.00000	.00000

RUN NO. 394/ 0 GRADIENT INTERVAL = -5.00/ 5.00

DLT-X	DLT-Z	CN	CA	CLM	CY	CYN	CBL	XCP/L	CPB1	CPB2	CPBC
400.440	32.761	-.12371	.11986	.00785	.00698	.00141	.00001	.72344	-.02352	-.02225	-.01962
400.510	103.250	-.14719	.11522	-.00501	.00438	-.00025	.00015	.62594	-.02482	-.02347	-.02095
400.420	201.570	-.20907	.11138	-.01198	.00221	.00016	-.00085	.60278	-.02560	-.02435	-.02188
400.660	300.630	-.24569	.11098	-.01099	.00209	.00010	-.00076	.61529	-.02597	-.02488	-.02246
400.600	400.250	-.25353	.11243	-.00907	.00207	.00011	-.00080	.62422	-.02604	-.02497	-.02259
400.430	500.300	-.25369	.11274	-.00905	.00185	.00009	-.00080	.62431	-.02603	-.02497	-.02261
	GRADIENT	.00000	.00000	.00000	.00000	.00000	.00000	.00000	.00000	.00000	.00000

AEDC VA422(IA17) ORB AND ET SEPARATING(ORB DATA) (RTR260) (24 JUL 75)

REFERENCE DATA

SREF = 2690.0000 SQ.FT. XMRP = 1089.6000 IN. XO
LREF = 1290.3000 IN. YMRP = .0000 IN. YO
BREF = 1290.3000 IN. ZMRP = 375.0000 IN. ZO
SCALE = .0100

PARAMETRIC DATA

DLT-Y = 60.000 ALPHA = -10.000
BETA = .000 DLTALF = -10.000
DLTBTA = 3.000 MACH = 5.930
AILRON = .000 ELEVON = -20.000
GRID = 10.000

RUN NO. 391/ 0 GRADIENT INTERVAL = -5.00/ 5.00

DLT-X	DLT-Z	CN	CA	CLM	CY	CYN	CBL	XCP/L	CPB1	CPB2	CPBC
.432	403.720	-.06552	.10573	-.03605	.00238	.00022	-.00121	.10985	-.01785	-.01680	-.01476
.571	501.520	-.16029	.10077	-.03038	.00151	-.00008	-.00144	.47044	-.01945	-.01833	-.01632
.397	600.530	-.24072	.10627	-.01206	.00214	.00011	-.00075	.60989	-.02117	-.02009	-.01865
.401	700.230	-.25265	.11087	-.00917	.00211	.00011	-.00078	.62371	-.02114	-.02018	-.01896
.712	800.150	-.25382	.11196	-.00895	.00220	.00012	-.00078	.62476	-.02023	-.01934	-.01826
	GRADIENT	.00000	.00000	.00000	.00000	.00000	.00000	.00000	.00000	.00000	.00000

RUN NO. 392/ 0 GRADIENT INTERVAL = -5.00/ 5.00

DLT-X	DLT-Z	CN	CA	CLM	CY	CYN	CBL	XCP/L	CPB1	CPB2	CPBC
400.410	397.160	-.20060	.10593	-.02024	.00257	.00009	-.00059	.55912	-.01238	-.01159	-.00873
400.460	499.500	-.24961	.10982	-.00991	.00209	.00012	-.00073	.62028	-.01121	-.01047	-.00796
400.350	600.180	-.25115	.11020	-.00940	.00207	.00010	-.00076	.62257	-.01160	-.01101	-.00898
400.390	700.160	-.25284	.11183	-.00900	.00199	.00011	-.00077	.62441	-.01260	-.01202	-.01033
400.500	800.250	-.25323	.11206	-.00899	.00211	.00011	-.00077	.62451	-.01419	-.01354	-.01220
	GRADIENT	.00000	.00000	.00000	.00000	.00000	.00000	.00000	.00000	.00000	.00000

ORIGINAL PAGE IS OF POOR QUALITY

AEDC VA422(IA17) ORB AND ET SEPARATING(ORB DATA) (RTR261) (24 JUL 75)

REFERENCE DATA

SREF = 2690.0000 SQ.FT. XMRP = 1089.6000 IN. XO
LREF = 1290.3000 IN. YMRP = .0000 IN. YO
BREF = 1290.3000 IN. ZMRP = 375.0000 IN. ZO
SCALE = .0100

PARAMETRIC DATA

DLT-Y = 60.000 ALPHA = -5.000
BETA = .000 DLTALF = .000
DLTBTA = 3.000 MACH = 5.930
AILRON = .000 ELEVON = -20.000
GRID = 11.000

RUN NO. 404/ 0 GRADIENT INTERVAL = -5.00/ 5.00

DLT-X	DLT-Z	CN	CA	CLM	CY	CYN	CBL	XCP/L	CPB1	CPB2	CPBC
.658	19.598	-.08588	.10824	-.00408	.00276	.00058	-.00139	.61246	-.02585	-.02516	-.02451
.571	101.590	-.07509	.10521	.00075	.00788	.00113	-.00102	.67002	-.02604	-.02534	-.02475
.531	201.090	-.09116	.10382	-.00373	.00362	-.00003	-.00073	.61909	-.02621	-.02552	-.02505
.526	301.280	-.12344	.09650	-.00997	.00263	-.00013	-.00013	.57926	-.02624	-.02555	-.02517
.516	400.240	-.15895	.09565	-.00958	.00253	-.00010	-.00036	.59974	-.02621	-.02556	-.02525
.617	500.230	-.16765	.09671	-.00741	.00223	-.00011	-.00040	.61580	-.02608	-.02545	-.02519
.503	600.230	-.16753	.09694	-.00741	.00237	-.00010	-.00041	.61578	-.02590	-.02527	-.02502
	GRADIENT	.00000	.00000	.00000	.00000	.00000	.00000	.00000	.00000	.00000	.00000

RUN NO. 405/ 0 GRADIENT INTERVAL = -5.00/ 5.00

DLT-X	DLT-Z	CN	CA	CLM	CY	CYN	CBL	XCP/L	CPB1	CPB2	CPBC
400.450	20.211	-.04272	.10277	.01162	.00544	.00177	.00039	.93199	-.02654	-.02547	-.02470
400.540	100.180	-.06905	.10292	-.00025	.00566	.00019	-.00089	.65634	-.02567	-.02462	-.02360
400.560	197.520	-.10382	.09678	-.00919	.00285	-.00015	.00037	.57150	-.02525	-.02428	-.02317
400.460	298.190	-.14858	.09500	-.01104	.00261	-.00011	-.00027	.58568	-.02517	-.02421	-.02317
400.520	399.990	-.16738	.09585	-.00735	.00238	-.00010	-.00041	.61606	-.02520	-.02425	-.02326
400.480	500.130	-.16769	.09653	-.00730	.00238	-.00009	-.00040	.61647	-.02524	-.02431	-.02334
400.510	600.110	-.16781	.09660	-.00732	.00236	-.00010	-.00040	.61640	-.02539	-.02449	-.02363
	GRADIENT	.00000	.00000	.00000	.00000	.00000	.00000	.00000	.00000	.00000	.00000

AEDC VA422(IA17) ORB AND ET SEPARATING(ORB DATA) (RTR262) (24 JUL 75)

REFERENCE DATA

SREF = 2690.0000 SQ.FT. XMRP = 1089.6000 IN. XO
LREF = 1290.3000 IN. YMRP = .0000 IN. YO
BREF = 1290.3000 IN. ZMRP = 375.0000 IN. ZO
SCALE = .0100

PARAMETRIC DATA

DLT-Y = 60.000 ALPHA = -5.000
BETA = .000 DLTALF = -10.000
DLTBTA = 3.000 MACH = 5.930
AILRON = .000 ELEVON = -20.000
GRID = 11.000

RUN NO. 402/ 0 GRADIENT INTERVAL = -5.00/ 5.00

DLT-X	DLT-Z	CN	CA	CLM	CY	CYN	CBL	XCP/L	CPB1	CPB2	CPBC
.519	404.090	.01929	.09099	-.03180	.00210	-.00014	-.00045	2.30820	-.02135	-.02103	-.02016
.466	500.930	-.11997	.08977	-.01909	.00262	-.00012	-.00028	.50092	-.02221	-.02177	-.02147
.622	600.360	-.16610	.09502	-.00761	.00234	-.00010	-.00040	.61417	-.02223	-.02176	-.02178
.467	750.170	-.16712	.09659	-.00740	.00239	-.00010	-.00040	.61575	-.02117	-.02071	-.02092
.389	800.680	-.16695	.09651	-.00739	.00237	-.00010	-.00040	.61574	-.02036	-.01994	-.02012
	GRADIENT	.00000	.00000	.00000	.00000	.00000	.00000	.00000	.00000	.00000	.00000

RUN NO. 403/ 0 GRADIENT INTERVAL = -5.00/ 5.00

DLT-X	DLT-Z	CN	CA	CLM	CY	CYN	CBL	XCP/L	CPB1	CPB2	CPBC
400.400	396.900	-.12440	.09285	-.01568	.00265	-.00013	-.00024	.53396	-.01830	-.01813	-.01628
400.370	499.560	-.16413	.09522	-.00826	.00233	-.00009	-.00038	.60968	-.01794	-.01772	-.01612
400.450	599.970	-.16663	.09658	-.00744	.00222	-.00010	-.00040	.61536	-.01839	-.01812	-.01682
400.430	750.180	-.16689	.09681	-.00743	.00224	-.00011	-.00040	.61550	-.02010	-.01973	-.01893
400.460	800.090	-.16711	.09685	-.00743	.00230	-.00010	-.00041	.61552	-.02094	-.02053	-.01989
	GRADIENT	.00000	.00000	.00000	.00000	.00000	.00000	.00000	.00000	.00000	.00000

AEDC VA422(IA17) ORB AND ET SEPARATING(ORB DATA) (RTR264) (24 JUL 75)

REFERENCE DATA

SREF = 2690.0000 SQ.FT. XMRP = 1089.6000 IN. XO
LREF = 1290.3000 IN. YMRP = .0000 IN. YO
BREF = 1290.3000 IN. ZMRP = 375.0000 IN. ZO
SCALE = .0100

PARAMETRIC DATA

DLT-Y = 60.000 ALPHA = -5.000
BETA = .000 DLTALF = -20.000
DLTBTA = 3.000 MACH = 5.930
AILRON = .000 ELEVON = -20.000
GRID = 11.000

RUN NO. 407/ 0 GRADIENT INTERVAL = -5.00/ 5.00

DLT-X	DLT-Z	CN	CA	CLM	CY	CYN	CBL	XCP/L	CPB1	CPB2	CPBC
.391	804.700	.03041	.08769	-.03357	.00283	-.00028	-.00010	1.76400	-.01494	-.01487	-.01285
.513	900.800	-.12115	.08802	-.01981	.00185	-.00012	-.00094	.49646	-.01537	-.01524	-.01327
.400	1000.400	-.16607	.09410	-.00759	.00215	-.00010	-.00040	.61430	-.01541	-.01531	-.01329
	GRADIENT	.00000	.00000	.00000	.00000	.00000	.00000	.00000	.00000	.00000	.00000

AEDC VA422(IA17) ORB AND ET SEPARATING(ORB DATA) (RTR264) (24 JUL 75)

REFERENCE DATA

SREF = 2690.0000 SQ.FT. XMRP = 1089.6000 IN. XO
LREF = 1290.3000 IN. YMRP = .0000 IN. YO
BREF = 1290.3000 IN. ZMRP = 375.0000 IN. ZO
SCALE = .0100

PARAMETRIC DATA

DLT-Y = 60.000 ALPHA = -5.000
BETA = .000 DLTALF = -20.000
DLTBTA = 3.000 MACH = 5.930
AILRON = .000 ELEVON = -20.000
GRID = 11.000

RUN NO. 401/ 0 GRADIENT INTERVAL = -5.00/ 5.00

DLT-X	DLT-Z	CN	CA	CLM	CY	CYN	CBL	XCP/L	CPB1	CPB2	CPBC
400.530	750.980	-.13385	.08387	-.01408	.00180	-.00025	-.00095	.55497	-.01050	-.01037	-.00805
400.380	800.490	-.15939	.08719	-.00909	.00233	-.00010	-.00041	.60295	-.01451	-.01424	-.01331
400.350	900.430	-.16520	.09256	-.00764	.00230	-.00011	-.00039	.61376	-.01512	-.01478	-.01478
400.340	1000.400	-.16625	.09569	-.00734	.00229	-.00011	-.00040	.61584	-.01346	-.01317	-.01318
	GRADIENT	.00000	.00000	.00000	.00000	.00000	.00000	.00000	.00000	.00000	.00000

AEDC VA422(IA17) ORB AND ET SEPARATING(ORB DATA) (RTR265) (24 JUL 75)

REFERENCE DATA

SREF = 2690.0000 SQ.FT. XMRP = 1089.6000 IN. XO
LREF = 1290.3000 IN. YMRP = .0000 IN. YO
BREF = 1290.3000 IN. ZMRP = 375.0000 IN. ZO
SCALE = .0100

PARAMETRIC DATA

DLT-Y = 60.000 ALPHA = 5.000
BETA = .000 DLTALF = .000
DLTBTA = 3.000 MACH = 5.930
AILRON = .000 ELEVON = -20.000
GRID = 12.000

RUN NO. 417/ 0 GRADIENT INTERVAL = -5.00/ 5.00

DLT-X	DLT-Z	CN	CA	CLM	CY	CYN	CBL	XCP/L	CPB1	CPB2	CPBC
.618	19.231	.02428	.06335	-.00958	-.00425	-.00077	-.00166	1.05380	-.02824	-.02808	-.02754
.614	97.915	.02521	.07648	-.00106	-.00160	.00045	-.00113	.70201	-.02800	-.02785	-.02728
.512	199.190	.05116	.07539	.01268	.00028	.00089	-.00155	.41210	-.02775	-.02762	-.02704
.702	300.230	.09740	.07773	.00428	.00053	.00044	-.00174	.61609	-.02752	-.02740	-.02681
.669	402.100	.12806	.07521	-.00877	.00356	-.00062	-.00047	.72848	-.02737	-.02725	-.02665
.757	501.150	.07296	.06779	-.00953	.00150	-.00007	.00054	.79064	-.02722	-.02711	-.02651
.755	598.290	.03401	.06846	-.00561	.00112	-.00000	-.00021	.82505	-.02702	-.02693	-.02634
	GRADIENT	.00000	.00000	.00000	.00000	.00000	.00000	.00000	.00000	.00000	.00000

RUN NO. 418/ 0 GRADIENT INTERVAL = -5.00/ 5.00

DLT-X	DLT-Z	CN	CA	CLM	CY	CYN	CBL	XCP/L	CPB1	CPB2	CPBC
400.560	19.975	.07710	.07498	.01689	.00035	.00187	-.00205	.44099	-.02943	-.02926	-.02873
400.410	98.532	.07560	.07484	.01144	-.00046	.00087	-.00216	.50869	-.02939	-.02926	-.02867
400.640	199.920	.12237	.07802	-.00003	.00239	-.00020	-.00200	.66023	-.02930	-.02918	-.02854
400.570	298.790	.12012	.06985	-.01066	.00219	-.00019	.00172	.74871	-.02935	-.02918	-.02855
400.620	397.840	.05630	.06741	-.00834	.00131	-.00004	.00003	.80821	-.02940	-.02925	-.02861
400.630	499.470	.02893	.06868	-.00425	.00122	.00001	-.00021	.80705	-.02937	-.02923	-.02854
400.620	599.850	.02687	.06983	-.00350	.00111	-.00000	-.00023	.79037	-.02920	-.02905	-.02825
	GRADIENT	.00000	.00000	.00000	.00000	.00000	.00000	.00000	.00000	.00000	.00000

AEDC VA422(IA17) ORB AND ET SEPARATING(ORB DATA) (RTR268) (24 JUL 75)

REFERENCE DATA

SREF = 2690.0000 SQ.FT. XMRP = 1089.6000 IN. XO
LREF = 1290.3000 IN. YMRP = .0000 IN. YO
BREF = 1290.3000 IN. ZMRP = 375.0000 IN. ZO
SCALE = .0100

PARAMETRIC DATA

DLT-Y = 60.000 ALPHA = 5.000
BETA = .000 DLTALF = -10.000
DLTBTA = 3.000 MACH = 5.930
AILRON = .000 ELEVON = -20.000
GRID = 12.000

RUN NO. 415/ 0 GRADIENT INTERVAL = -5.00/ 5.00

DLT-X	DLT-Z	CN	CA	CLM	CY	CYN	CBL	XCP/L	CPB1	CPB2	CPBC
.523	401.220	.17268	.07894	-.00251	.00080	.00057	-.00192	.67452	-.02362	-.02378	-.02274
.494	502.890	.17137	.07629	-.01249	.00410	-.00077	-.00063	.73286	-.02308	-.02328	-.02197
.551	601.710	.09637	.06681	-.01288	.00179	-.00012	.00128	.79365	-.02253	-.02278	-.02147
.660	749.950	.02930	.06771	-.00415	.00111	-.00001	-.00022	.80172	-.02183	-.02217	-.02065
-.662	802.940	.02745	.06861	-.00349	.00109	-.00001	-.00023	.78725	-.02137	-.02180	-.02009
	GRADIENT	.00000	.00000	.00000	.00000	.00000	.00000	.00000	.00000	.00000	.00000

RUN NO. 416/ 0 GRADIENT INTERVAL = -5.00/ 5.00

DLT-X	DLT-Z	CN	CA	CLM	CY	CYN	CBL	XCP/L	CPB1	CPB2	CPBC
400.600	398.040	.15664	.06861	-.01565	.00262	-.00027	.00268	.75989	-.02439	-.02439	-.02332
400.450	497.570	.07140	.06661	-.01042	.00156	-.00009	.00040	.80600	-.02434	-.02435	-.02331
400.590	599.280	.03189	.06786	-.00512	.00116	-.00000	-.00020	.82042	-.02451	-.02452	-.02351
400.630	750.050	.02747	.06976	-.00354	.00112	-.00000	-.00023	.78891	-.02470	-.02472	-.02370
400.510	800.100	.02737	.06983	-.00355	.00114	-.00000	-.00023	.78954	-.02508	-.02509	-.02419
	GRADIENT	.00000	.00000	.00000	.00000	.00000	.00000	.00000	.00000	.00000	.00000

AEDC VA422(IA17) ORB AND ET SEPARATING(ORB DATA) (RTR268) (24 JUL 75)

REFERENCE DATA

SREF = 2690.0000 SQ.FT. XMRP = 1089.6000 IN. XO
LREF = 1290.3000 IN. YMRP = .0000 IN. YO
BREF = 1290.3000 IN. ZMRP = 375.0000 IN. ZO
SCALE = .0100

PARAMETRIC DATA

DLT-Y = 60.000 ALPHA = 5.000
BETA = .000 DLTALF = -20.000
DLTBTA = 3.000 MACH = 5.930
AILRON = .000 ELEVON = -20.000
GRID = 12.000

RUN NO. 420/ 0 GRADIENT INTERVAL = -5.00/ 5.00

DLT-X	DLT-Z	CN	CA	CLM	CY	CYN	CBL	XCP/L	CPB1	CPB2	CPBC
.512	801.340	.12908	.06041	-.02812	.00132	-.00009	-.00012	.87785	-.01846	-.01940	-.01592
.520	900.210	.03609	.06595	-.00638	.00114	-.00001	-.00020	.83686	-.01865	-.01962	-.01564
.589	1000.100	.02898	.06589	-.00338	.00114	.00002	-.00023	.78532	-.01991	-.02071	-.01702
	GRADIENT	.00000	.00000	.00000	.00000	.00000	.00000	.00000	.00000	.00000	.00000

ORIGINAL PAGE IS OF POOR QUALITY

AEDC VA422(IA17) ORB AND ET SEPARATING(ORB DATA) (RTR268) (24 JUL 75)

REFERENCE DATA

SREF = 2690.0000 SQ.FT. XMRP = 1089.6000 IN. XO
LREF = 1290.3000 IN. YMRP = .0000 IN. YO
BREF = 1290.3000 IN. ZMRP = 375.0000 IN. ZO
SCALE = .0100

PARAMETRIC DATA

DLT-Y = 60.000 ALPHA = 5.000
BETA = .000 DLTALF = -20.000
DLTBTA = 3.000 MACH = 5.930
AILRON = .000 ELEVON = -20.000
GRID = 12.000

RUN NO. 414/ 0 GRADIENT INTERVAL = -5.00/ 5.00

DLT-X	DLT-Z	CN	CA	CLM	CY	CYN	CBL	XCP/L	CPB1	CPB2	CPBC
400.440	750.300	.03209	.06629	-.00485	.00108	-.00002	-.00021	.81115	-.02278	-.02311	-.02068
400.430	800.270	.02772	.06654	-.00338	.00116	.00001	-.00023	.78186	-.02300	-.02334	-.02112
400.480	900.110	.02798	.06813	-.00346	.00110	-.00001	-.00023	.78365	-.02245	-.02289	-.02053
400.440	1000.200	.02805	.06901	-.00348	.00109	-.00001	-.00023	.78398	-.02163	-.02218	-.01935
	GRADIENT	.00000	.00000	.00000	.00000	.00000	.00000	.00000	.00000	.00000	.00000

AEDC VA422(IA17) ORB AND ET SEPARATING(ORB DATA) (RTR269) (24 JUL 75)

REFERENCE DATA

SREF = 2690.0000 SQ.FT. XMRP = 1089.6000 IN. XO
LREF = 1290.3000 IN. YMRP = .0000 IN. YO
BREF = 1290.3000 IN. ZMRP = 375.0000 IN. ZO
SCALE = .0100

PARAMETRIC DATA

DLT-Y = 60.000 ALPHA = .000
BETA = .000 DLTALF = .000
DLTBTA = 3.000 MACH = 5.930
AILRON = .000 ELEVON = -20.000
GRID = 13.000

RUN NO. 430/ 0 GRADIENT INTERVAL = -5.00/ 5.00

DLT-X	DLT-Z	CN	CA	CLM	CY	CYN	CBL	XCP/L	CPB1	CPB2	CPBC
.513	18.804	-.03386	.08450	-.00787	-.00238	.00003	-.00131	.42749	-.02520	-.02487	-.02445
.545	99.549	-.02504	.09219	.00169	.00154	.00156	-.00126	.72735	-.02498	-.02470	-.02425
.568	200.550	-.00268	.08796	.00317	.00216	.00048	-.00172	.00000	-.02476	-.02452	-.02411
.591	302.190	.01622	.08512	-.00884	.00340	-.00027	-.00055	1.20500	-.02452	-.02431	-.02389
.505	400.890	-.03023	.07823	-.01139	.00148	.00014	.00001	.28320	-.02424	-.02402	-.02363
.587	500.060	-.06269	.07835	-.00864	.00129	.00018	-.00035	.52210	-.02392	-.02371	-.02337
.514	600.080	-.06837	.07949	-.00696	.00121	.00018	-.00038	.55820	-.02346	-.02327	-.02293
	GRADIENT	.00000	.00000	.00000	.00000	.00000	.00000	.00000	.00000	.00000	.00000

RUN NO. 431/ 0 GRADIENT INTERVAL = -5.00/ 5.00

DLT-X	DLT-Z	CN	CA	CLM	CY	CYN	CBL	XCP/L	CPB1	CPB2	CPBC
400.580	19.988	.02889	.08610	.01257	.00450	.00131	-.00166	.22498	-.02702	-.02661	-.02616
400.450	100.210	.01258	.08613	.00343	.00362	.00014	-.00121	.38661	-.02661	-.02627	-.02561
400.520	198.780	.02461	.08404	-.00897	.00535	-.00069	.00045	1.02460	-.02645	-.02606	-.02538
400.550	297.840	-.02652	.07801	-.01185	.00157	.00013	.00004	.21308	-.02643	-.02602	-.02536
400.650	399.070	-.06270	.07811	-.00874	.00128	.00017	-.00035	.52061	-.02645	-.02604	-.02539
400.520	500.080	-.06868	.07930	-.00689	.00130	.00018	-.00037	.55975	-.02638	-.02598	-.02527
400.500	600.130	-.06871	.07948	-.00689	.00128	.00017	-.00038	.55974	-.02641	-.02602	-.02532
	GRADIENT	.00000	.00000	.00000	.00000	.00000	.00000	.00000	.00000	.00000	.00000

AEDC VA422(IA17) ORB AND ET SEPARATING(ORB DATA) (RTR270) (24 JUL 75)

REFERENCE DATA

SREF = 2690.0000 SQ.FT. XMRP = 1089.6000 IN. XO
LREF = 1290.3000 IN. YMRP = .0000 IN. YO
BREF = 1290.3000 IN. ZMRP = 375.0000 IN. ZO
SCALE = .0100

PARAMETRIC DATA

DLT-Y = 60.000 ALPHA = .000
BETA = .000 DLTALF = -10.000
DLTBTA = 3.000 MACH = 5.930
AILRON = .000 ELEVON = -20.000
GRID = 13.000

RUN NO. 428/ 0 GRADIENT INTERVAL = -5.00/ 5.00

DLT-X	DLT-Z	CN	CA	CLM	CY	CYN	CBL	XCP/L	CPB1	CPB2	CPBC
.514	403.700	.12446	.08407	-.02361	.00306	-.00010	-.00068	.84973	-.01882	-.01881	-.01830
.436	501.810	.00631	.07671	-.01549	.00189	.00007	.00070	3.11670	-.01820	-.01822	-.01774
.445	600.180	-.05276	.07678	-.01108	.00122	.00015	-.00036	.45029	-.01724	-.01729	-.01680
.533	749.990	-.06809	.07908	-.00693	.00125	.00018	-.00037	.55828	-.01446	-.01464	-.01391
-.205	801.820	-.06807	.07910	-.00692	.00123	.00018	-.00038	.55829	-.01282	-.01313	-.01199
	GRADIENT	.00000	.00000	.00000	.00000	.00000	.00000	.00000	.00000	.00000	.00000

RUN NO. 429/ 0 GRADIENT INTERVAL = -5.00/ 5.00

DLT-X	DLT-Z	CN	CA	CLM	CY	CYN	CBL	XCP/L	CPB1	CPB2	CPBC
400.350	396.770	.00518	.07601	-.01644	.00187	.00005	.00078	3.83120	-.01897	-.01905	-.01795
400.370	498.370	-.05464	.07722	-.01084	.00120	.00016	-.00035	.46156	-.01866	-.01874	-.01765
400.410	600.310	-.06795	.07751	-.00702	.00118	.00019	-.00037	.55671	-.01904	-.01907	-.01812
400.430	750.260	-.06815	.07960	-.00698	.00120	.00019	-.00037	.55753	-.01965	-.01958	-.01885
400.450	800.180	-.06831	.07964	-.00699	.00118	.00018	-.00038	.55772	-.02050	-.02039	-.01983
	GRADIENT	.00000	.00000	.00000	.00000	.00000	.00000	.00000	.00000	.00000	.00000

AEDC VA422(IA17) ORB AND ET SEPARATING(ORB DATA) (RTR272) (24 JUL 75)

REFERENCE DATA

SREF = 2690.0000 SQ.FT. XMRP = 1089.6000 IN. XO
LREF = 1290.3000 IN. YMRP = .0000 IN. YO
BREF = 1290.3000 IN. ZMRP = 375.0000 IN. ZO
SCALE = .0100

PARAMETRIC DATA

DLT-Y = 60.000 ALPHA = .000
BETA = .000 DLTALF = -20.000
DLTBTA = 3.000 MACH = 5.930
AILRON = .000 ELEVON = -20.000
GRID = 13.000

RUN NO. 433/ 0 GRADIENT INTERVAL = -5.00/ 5.00

DLT-X	DLT-Z	CN	CA	CLM	CY	CYN	CBL	XCP/L	CPB1	CPB2	CPBC
.531	801.960	.04524	.06902	-.03166	.00108	.00015	-.00063	1.35980	-.01452	-.01530	-.01223
.522	900.460	-.04992	.07330	-.01300	.00117	.00018	-.00041	.39960	-.01496	-.01575	-.01218
.595	1000.300	-.06818	.07507	-.00708	.00110	.00020	-.00038	.55616	-.01689	-.01737	-.01442
	GRADIENT	.00000	.00000	.00000	.00000	.00000	.00000	.00000	.00000	.00000	.00000

ORIGINAL PAGE IS OF POOR QUALITY

AEDC VA422(IA17) ORB AND ET SEPARATING(ORB DATA) (RTR272) (24 JUL 75)

REFERENCE DATA

SREF = 2690.0000 SQ.FT. XMRP = 1089.6000 IN. XO
LREF = 1290.3000 IN. YMRP = .0000 IN. YO
BREF = 1290.3000 IN. ZMRP = 375.0000 IN. ZO
SCALE = .0100

PARAMETRIC DATA

DLT-Y = 60.000 ALPHA = .000
BETA = .000 DLTALF = -20.000
DLTBTA = 3.000 MACH = 5.930
AILRON = .000 ELEVON = -20.000
GRID = 13.000

RUN NO. 427/ 0 GRADIENT INTERVAL = -5.00/ 5.00

DLT-X	DLT-Z	CN	CA	CLM	CY	CYN	CBL	XCP/L	CPB1	CPB2	CPBC
400.460	750.330	-.06728	.07413	-.00703	.00116	.00020	-.00037	.55553	-.01123	-.01124	-.00970
400.500	800.250	-.06749	.07394	-.00706	.00120	.00021	-.00038	.55533	-.01265	-.01250	-.01133
400.560	900.490	-.06767	.07544	-.00696	.00125	.00021	-.00037	.55718	-.01300	-.01282	-.01200
400.510	1000.300	-.06779	.07671	-.00693	.00123	.00020	-.00037	.55779	-.01218	-.01196	-.01111
	GRADIENT	.00000	.00000	.00000	.00000	.00000	.00000	.00000	.00000	.00000	.00000

AEDC VA422(IA17) ORB AND ET SEPARATING(ORB DATA) (RTR273) (24 JUL 75)

REFERENCE DATA

SREF = 2690.0000 SQ.FT. XMRP = 1089.6000 IN. XO
LREF = 1290.3000 IN. YMRP = .0000 IN. YO
BREF = 1290.3000 IN. ZMRP = 375.0000 IN. ZO
SCALE = .0100

PARAMETRIC DATA

DLT-Y = 60.000 ALPHA = .000
BETA = 3.000 DLTALF = .000
DLTBTA = 3.000 MACH = 5.930
AILRON = .000 ELEVON = -20.000
GRID = 14.000

RUN NO. 440/ 0 GRADIENT INTERVAL = -5.00/ 5.00

DLT-X	DLT-Z	CN	CA	CLM	CY	CYN	CBL	XCP/L	CPB1	CPB2	CPBC
.617	18.860	-.02502	.08363	-.00888	-.04163	-.00188	-.00188	.30495	-.02499	-.02504	-.02457
.674	99.453	-.01674	.09300	.00121	-.03962	-.00011	-.00129	.73208	-.02473	-.02476	-.02431
.612	200.920	.00419	.08679	.00364	-.03629	-.00033	-.00264	-.20956	-.02450	-.02450	-.02406
.639	301.980	.01237	.08542	-.00756	-.02998	-.00192	.00027	1.27160	-.02415	-.02415	-.02368
.704	401.100	-.02830	.07979	-.01155	-.03281	-.00149	.00239	.25179	-.02387	-.02387	-.02340
.614	500.110	-.06539	.07981	-.00810	-.03381	-.00142	.00071	.53610	-.02354	-.02352	-.02308
.589	600.070	-.07096	.08099	-.00650	-.03407	-.00139	.00057	.56839	-.02307	-.02308	-.02257
	GRADIENT	.00000	.00000	.00000	.00000	.00000	.00000	.00000	.00000	.00000	.00000

AEDC VA422(IA17) ORB AND ET SEPARATING(ORB DATA) (RTR274) (24 JUL 75)

REFERENCE DATA

SREF = 2690.0000 SQ.FT. XMRP = 1089.6000 IN. XO
LREF = 1290.3000 IN. YMRP = .0000 IN. YO
BREF = 1290.3000 IN. ZMRP = 375.0000 IN. ZO
SCALE = .0100

PARAMETRIC DATA

DLT-Y = 60.000 ALPHA = .000
BETA = 3.000 DLTALF = -10.000
DLTBTA = 3.000 MACH = 5.930
AILRON = .000 ELEVON = -20.000
GRID = 14.000

RUN NO. 439/ 0 GRADIENT INTERVAL = -5.00/ 5.00

DLT-X	DLT-Z	CN	CA	CLM	CY	CYN	CBL	XCP/L	CPB1	CPB2	CPBC
.547	403.760	.12215	.08353	-.02247	-.02950	-.00184	.00016	.84395	-.02155	-.02146	-.02075
.495	501.790	.00859	.07831	-.01609	-.03167	-.00157	.00388	2.53390	-.02138	-.02130	-.02062
.442	600.220	-.05523	.07831	-.01055	-.03361	-.00145	.00086	.46894	-.02081	-.02071	-.02003
.517	750.030	-.07084	.08093	-.00650	-.03396	-.00138	.00057	.56818	-.01983	-.01976	-.01889
-.000	801.640	-.07062	.08106	-.00651	-.03412	-.00139	.00057	.56777	-.01900	-.01899	-.01782
	GRADIENT	.00000	.00000	.00000	.00000	.00000	.00000	.00000	.00000	.00000	.00000

AEDC VA422(IA17) ORB AND ET SEPARATING(ORB DATA) (RTR275) (24 JUL 75)

REFERENCE DATA

SREF = 2690.0000 SQ.FT. XMRP = 1089.6000 IN. XO
LREF = 1290.3000 IN. YMRP = .0000 IN. YO
BREF = 1290.3000 IN. ZMRP = 375.0000 IN. ZO
SCALE = .0100

PARAMETRIC DATA

DLT-Y = 60.000 ALPHA = .000
BETA = 3.000 DLTALF = -20.000
DLTBTA = 3.000 MACH = 5.930
AILRON = .000 ELEVON = -20.000
GRID = 14.000

RUN NO. 438/ 0 GRADIENT INTERVAL = -5.00/ 5.00

DLT-X	DLT-Z	CN	CA	CLM	CY	CYN	CBL	XCP/L	CPB1	CPB2	CPBC
.462	801.890	.04812	.06988	-.03247	-.03192	-.00141	.00135	1.33480	-.01907	-.01931	-.01780
.460	900.460	-.04672	.07436	-.01431	-.03364	-.00144	.00090	.35370	-.01946	-.01967	-.01824
.440	1000.300	-.07054	.07897	-.00643	-.03397	-.00142	.00058	.56879	-.01962	-.01977	-.01836
	GRADIENT	.00000	.00000	.00000	.00000	.00000	.00000	.00000	.00000	.00000	.00000

ORIGINAL PAGE IS OF POOR QUALITY

AEDC VA422(IA17) ORB AND ET SEPARATING(ORB DATA) (RTR277) (24 JUL 75)

REFERENCE DATA

SREF = 2690.0000 SQ.FT. XMRP = 1089.6000 IN. XO
LREF = 1290.3000 IN. YMRP = .0000 IN. YO
BREF = 1290.3000 IN. ZMRP = 375.0000 IN. ZO
SCALE = .0100

PARAMETRIC DATA

DLT-Y = 60.000 ALPHA = .000
BETA = 3.000 DLTALF = -10.000
DLTBTA = 3.000 MACH = 5.930
AILRON = .000 ELEVON = -40.000
GRID = 14.000

RUN NO. 454/ 0 GRADIENT INTERVAL = -5.00/ 5.00

DLT-X	DLT-Z	CN	CA	CLM	CY	CYN	CBL	XCP/L	CPB1	CPB2	CPBC
.411	403.750	.09203	.10120	-.01650	-.03051	-.00105	.00132	.83924	-.02095	-.02126	-.02003
.507	501.810	-.01913	.09554	-.01055	-.03222	-.00123	.00476	.10862	-.02088	-.02118	-.01999
.527	600.260	-.08241	.09547	-.00530	-.03420	-.00110	.00173	.59570	-.02041	-.02071	-.01949
.577	750.130	-.09762	.09824	-.00131	-.03458	-.00103	.00148	.64660	-.01943	-.01981	-.01834
.108	801.170	-.09746	.09833	-.00133	-.03455	-.00102	.00148	.64634	-.01862	-.01912	-.01728
	GRADIENT	.00000	.00000	.00000	.00000	.00000	.00000	.00000	.00000	.00000	.00000

AEDC VA422(IA17) ORB AND ET SEPARATING(ORB DATA) (RTR278) (24 JUL 75)

REFERENCE DATA

SREF = 2690.0000 SQ.FT. XMRP = 1089.6000 IN. XO
LREF = 1290.3000 IN. YMRP = .0000 IN. YO
BREF = 1290.3000 IN. ZMRP = 375.0000 IN. ZO
SCALE = .0100

PARAMETRIC DATA

DLT-Y = 60.000 ALPHA = .000
BETA = 3.000 DLTALF = -20.000
DLTBTA = 3.000 MACH = 5.930
AILRON = .000 ELEVON = -40.000
GRID = 14.000

RUN NO. 453/ 0 GRADIENT INTERVAL = -5.00/ 5.00

DLT-X	DLT-Z	CN	CA	CLM	CY	CYN	CBL	XCP/L	CPB1	CPB2	CPBC
.494	801.850	.01848	.08773	-.02656	-.03278	-.00102	.00214	2.09720	-.01947	-.02020	-.01791
.480	900.400	-.07397	.09095	-.00904	-.03425	-.00107	.00176	.53776	-.02020	-.02094	-.01880
.470	1000.300	-.09741	.09627	-.00127	-.03454	-.00106	.00149	.64695	-.02062	-.02125	-.01915
	GRADIENT	.00000	.00000	.00000	.00000	.00000	.00000	.00000	.00000	.00000	.00000

AEDC VA422(IA17) ORB AND ET SEPARATING(ORB DATA) (RTR279) (24 JUL 75)

REFERENCE DATA

SREF = 2690.0000 SQ.FT. XMRP = 1089.6000 IN. XO
LREF = 1290.3000 IN. YMRP = .0000 IN. YO
BREF = 1290.3000 IN. ZMRP = 375.0000 IN. ZO
SCALE = .0100

PARAMETRIC DATA

DLT-Y = 60.000 ALPHA = .000
BETA = .000 DLTALF = .000
DLTBTA = 3.000 MACH = 5.930
AILRON = .000 ELEVON = -40.000
GRID = 13.000

RUN NO. 605/ 0 GRADIENT INTERVAL = -5.00/ 5.00

DLT-X	DLT-Z	CN	CA	CLM	CY	CYN	CBL	XCP/L	CPB1	CPB2	CPBC
.468	18.999	-.05855	.09902	-.00350	-.00257	.00032	-.00088	.60017	-.02572	-.02458	-.02475
.495	99.692	-.05221	.10797	.00649	.00124	.00157	-.00102	.78432	-.02558	-.02446	-.02462
.543	200.490	-.03239	.10470	.00861	.00205	.00054	-.00148	.92588	-.02548	-.02440	-.02457
.439	302.040	-.01461	.10324	-.00318	.00300	-.00006	-.00032	.44240	-.02543	-.02435	-.02453
.413	400.880	-.06008	.09686	-.00583	.00129	.00021	.00032	.56303	-.02550	-.02444	-.02459
.438	500.180	-.09171	.09647	-.00323	.00082	.00027	-.00004	.62480	-.02559	-.02458	-.02478
.562	596.470	-.09744	.09779	-.00159	.00076	.00026	-.00006	.64372	-.02547	-.02449	-.02477
	GRADIENT	.00000	.00000	.00000	.00000	.00000	.00000	.00000	.00000	.00000	.00000

RUN NO. 606/ 0 GRADIENT INTERVAL = -5.00/ 5.00

DLT-X	DLT-Z	CN	CA	CLM	CY	CYN	CBL	XCP/L	CPB1	CPB2	CPBC
400.470	20.071	.00290	.09998	.01723	.00423	.00129	-.00163	.00000	-.02760	-.02621	-.02627
400.440	97.792	-.01588	.10298	.00857	.00325	.00049	-.00082	1.19970	-.02733	-.02598	-.02594
400.530	198.960	-.00553	.10256	-.00342	.00515	-.00049	.00077	.04183	-.02721	-.02584	-.02577
400.500	297.960	-.05599	.09682	-.00641	.00130	.00021	.00045	.54548	-.02705	-.02567	-.02560
400.530	399.060	-.09202	.09643	-.00331	.00085	.00027	-.00003	.62400	-.02692	-.02556	-.02549
400.550	500.070	-.09762	.09766	-.00156	.00081	.00026	-.00006	.64401	-.02671	-.02533	-.02523
400.620	600.200	-.09766	.09790	-.00155	.00076	.00028	-.00006	.64408	-.02659	-.02522	-.02516
	GRADIENT	.00000	.00000	.00000	.00000	.00000	.00000	.00000	.00000	.00000	.00000

AEDC VA422(IA17) ORB AND ET SEPARATING(ORB DATA) (RTR280) (24 JUL 75)

REFERENCE DATA

SREF = 2890.0000 SQ.FT. XMRP = 1089.6000 IN. XO
LREF = 1290.3000 IN. YMRP = .0000 IN. YO
BREF = 1290.3000 IN. ZMRP = 375.0000 IN. ZO
SCALE = .0100

PARAMETRIC DATA

DLT-Y = 60.000 ALPHA = .000
BETA = .000 DLTALF = -10.000
DLTBTA = 3.000 MACH = 5.930
AILRON = .000 ELEVON = -40.000
GRID = 13.000

RUN NO. 603/ 0 GRADIENT INTERVAL = -5.00/ 5.00

DLT-X	DLT-Z	CN	CA	CLM	CY	CYN	CBL	XCP/L	CPB1	CPB2	CPBC
.439	403.560	.09337	.10280	-.01774	.00307	.00021	-.00020	.84997	-.02142	-.02040	-.02061
.513	501.680	-.02394	.09566	-.00986	.00163	.00011	.00092	.24811	-.02142	-.02043	-.02076
.416	600.120	-.08171	.09532	-.00572	.00092	.00023	-.00005	.59000	-.02118	-.02024	-.02063
.415	750.050	-.09713	.09764	-.00161	.00084	.00027	-.00005	.64346	-.01992	-.01904	-.01949
-.156	801.570	-.09676	.09763	-.00161	.00071	.00027	-.00006	.64335	-.01902	-.01812	-.01852
	GRADIENT	.00000	.00000	.00000	.00000	.00000	.00000	.00000	.00000	.00000	.00000

RUN NO. 604/ 0 GRADIENT INTERVAL = -5.00/ 5.00

DLT-X	DLT-Z	CN	CA	CLM	CY	CYN	CBL	XCP/L	CPB1	CPB2	CPBC
400.350	396.950	-.02515	.09506	-.01068	.00163	.00010	.00093	.23515	-.01945	-.01829	-.01780
400.410	498.430	-.08382	.09523	-.00538	.00084	.00024	-.00003	.59583	-.01901	-.01789	-.01745
400.330	600.260	-.09667	.09731	-.00161	.00082	.00027	-.00006	.64338	-.01927	-.01812	-.01786
400.460	750.310	-.09709	.09786	-.00161	.00078	.00027	-.00006	.64342	-.02056	-.01949	-.01954
400.450	800.150	-.09758	.09793	-.00160	.00078	.00027	-.00006	.64360	-.02127	-.02023	-.02036
	GRADIENT	.00000	.00000	.00000	.00000	.00000	.00000	.00000	.00000	.00000	.00000

AEDC VA422(IA17) ORB AND ET SEPARATING(ORB DATA) (RTR282) (24 JUL 75)

REFERENCE DATA

SREF = 2890.0000 SQ.FT. XMRP = 1089.6000 IN. XO
LREF = 1290.3000 IN. YMRP = .0000 IN. YO
BREF = 1290.3000 IN. ZMRP = 375.0000 IN. ZO
SCALE = .0100

PARAMETRIC DATA

DLT-Y = 60.000 ALPHA = .000
BETA = .000 DLTALF = -20.000
DLTBTA = 3.000 MACH = 5.930
AILRON = .000 ELEVON = -40.000
GRID = 13.000

RUN NO. 601/ 0 GRADIENT INTERVAL = -5.00/ 5.00

DLT-X	DLT-Z	CN	CA	CLM	CY	CYN	CBL	XCP/L	CPB1	CPB2	CPBC
.473	801.880	.01478	.08838	-.02567	.00112	.00016	-.00027	2.39970	-.01461	-.01377	-.01291
.513	900.560	-.07917	.09157	-.00741	.00088	.00025	-.00011	.56641	-.01470	-.01382	-.01296
.501	1000.300	-.09894	.09529	-.00163	.00066	.00026	-.00006	.64323	-.01465	-.01374	-.01291
	GRADIENT	.00000	.00000	.00000	.00000	.00000	.00000	.00000	.00000	.00000	.00000

AEDC VA422(IA17) ORB AND ET SEPARATING(ORB DATA) (RTR282) (24 JUL 75)

REFERENCE DATA

SREF = 2690.0000 SQ.FT. XMRP = 1089.6000 IN. XO
LREF = 1290.3000 IN. YMRP = .0000 IN. YO
BREF = 1290.3000 IN. ZMRP = 375.0000 IN. ZO
SCALE = .0100

PARAMETRIC DATA

DLT-Y = 60.000 ALPHA = .000
BETA = .000 DLTALF = -20.000
DLTBTA = 3.000 MACH = 5.930
AILRON = .000 ELEVON = -40.000
GRID = 13.000

RUN NO. 802/ 0 GRADIENT INTERVAL = -5.00/ 5.00

DLT-X	DLT-Z	CN	CA	CLM	CY	CYN	CBL	XCP/L	CPB1	CPB2	CPBC
400.400	750.270	-.09605	.09271	-.00180	.00070	.00026	-.00006	.64123	-.01633	-.01531	-.01451
400.400	800.250	-.09638	.09387	-.00168	.00085	.00028	-.00006	.64260	-.01750	-.01656	-.01622
400.410	900.420	-.09658	.09335	-.00162	.00070	.00028	-.00006	.64323	-.01736	-.01651	-.01648
400.390	1000.300	-.09870	.09768	-.00161	.00074	.00026	-.00005	.64335	-.01599	-.01515	-.01493
	GRADIENT	.00000	.00000	.00000	.00000	.00000	.00000	.00000	.00000	.00000	.00000

AEDC VA422(IA17) ORB AND ET SEPARATING(ORB DATA) (RTR283) (24 JUL 75)

REFERENCE DATA

SREF = 2690.0000 SQ.FT. XMRP = 1089.6000 IN. XO
LREF = 1290.3000 IN. YMRP = .0000 IN. YO
BREF = 1290.3000 IN. ZMRP = 375.0000 IN. ZO
SCALE = .0100

PARAMETRIC DATA

DLT-Y = 60.000 ALPHA = 5.000
BETA = .000 DLTALF = .000
DLTBTA = 3.000 MACH = 5.930
AILRON = .000 ELEVON = -40.000
GRID = 12.000

RUN NO. 619/ 0 GRADIENT INTERVAL = -5.00/ 5.00

DLT-X	DLT-Z	CN	CA	CLM	CY	CYN	CBL	XCP/L	CPB1	CPB2	CPBC
.572	19.416	.00874	.07164	-.00682	-.00436	-.00069	-.00128	1.44020	-.02869	-.02787	-.02776
.571	98.267	.00675	.08630	.00167	-.00201	.00056	-.00080	.41260	-.02850	-.02770	-.02756
.555	199.280	.02878	.08562	.01613	.00033	.00098	-.00117	.09956	-.02831	-.02754	-.02739
.553	300.100	.06659	.08924	.00891	.00022	.00058	-.00122	.53003	-.02809	-.02732	-.02716
.555	402.080	.10594	.08677	-.00521	.00218	-.00032	-.00031	.70922	-.02801	-.02723	-.02705
.608	501.150	.05078	.07911	-.00581	.00087	-.00000	.00060	.77439	-.02803	-.02725	-.02706
.799	597.950	.01328	.07924	-.00219	.00051	.00008	-.00004	.82531	-.02815	-.02740	-.02723
	GRADIENT	.00000	.00000	.00000	.00000	.00000	.00000	.00000	.00000	.00000	.00000

RUN NO. 619/ 0 GRADIENT INTERVAL = -5.00/ 5.00

DLT-X	DLT-Z	CN	CA	CLM	CY	CYN	CBL	XCP/L	CPB1	CPB2	CPBC
400.580	19.951	.05817	.08418	.02020	.00029	.00192	-.00176	.30031	-.02977	-.02896	-.02898
400.450	96.850	.05361	.06562	.01498	-.00075	.00101	-.00180	.39093	-.02973	-.02895	-.02880
400.530	200.000	.09977	.06945	.00382	.00201	-.00025	-.00187	.62375	-.02962	-.02883	-.02865
400.480	298.930	.09750	.08139	-.00705	.00157	-.00003	.00155	.73230	-.02969	-.02883	-.02867
400.440	396.080	.03481	.07867	-.00476	.00094	.00003	.00014	.79665	-.02974	-.02883	-.02870
400.590	499.420	.00813	.07971	-.00084	.00054	.00009	-.00004	.76337	-.02969	-.02878	-.02859
400.810	599.830	.00599	.08073	-.00013	.00037	.00007	-.00006	.68179	-.02954	-.02861	-.02837
	GRADIENT	.00000	.00000	.00000	.00000	.00000	.00000	.00000	.00000	.00000	.00000

AEDC VA422(IA17) ORB AND ET SEPARATING(ORB DATA) (RTR284) (24 JUL 75)

REFERENCE DATA

SREF = 2890.0000 SQ.FT. XMRP = 1089.6000 IN. XO
LREF = 1290.3000 IN. YMRP = .0000 IN. YO
BREF = 1290.3000 IN. ZMRP = 375.0000 IN. ZO
SCALE = .0100

PARAMETRIC DATA

DLT-Y = 60.000 ALPHA = 5.000
BETA = .000 DLTALF = -10.000
DLTBTA = 3.000 MACH = 5.930
AILRON = .000 ELEVON = -40.000
GRID = 12.000

RUN NO. 818/ 0 GRADIENT INTERVAL = -5.00/ 5.00

DLT-X	DLT-Z	CN	CA	CLM	CY	CYN	CBL	XCP/L	CPB1	CPB2	CPBC
.440	401.110	.14779	.08920	.00160	.00078	.00068	-.00144	.64917	-.02616	-.02557	-.02531
.502	502.640	.14860	.08879	-.00861	.00322	-.00045	-.00041	.71793	-.02597	-.02538	-.02508
.563	601.680	.07444	.07881	-.00913	.00136	-.00007	.00138	.78272	-.02585	-.02528	-.02493
.467	750.050	.00875	.07950	-.00078	.00053	.00007	-.00004	.74896	-.02550	-.02495	-.02468
-.572	802.670	.00671	.08031	-.00011	.00029	.00010	-.00006	.67638	-.02524	-.02471	-.02440
	GRADIENT	.00000	.00000	.00000	.00000	.00000	.00000	.00000	.00000	.00000	.00000

RUN NO. 617/ 0 GRADIENT INTERVAL = -5.00/ 5.00

DLT-X	DLT-Z	CN	CA	CLM	CY	CYN	CBL	XCP/L	CPB1	CPB2	CPBC
400.540	398.240	.13424	.08054	-.01197	.00270	-.00008	.00292	.74914	-.02580	-.02500	-.02444
400.390	497.650	.04886	.07811	-.00673	.00124	-.00001	.00051	.79777	-.02555	-.02478	-.02424
400.570	599.160	.01126	.07910	-.00168	.00047	.00008	-.00003	.80886	-.02555	-.02478	-.02431
400.550	750.070	.00650	.08064	-.00014	.00046	.00008	-.00006	.68182	-.02580	-.02505	-.02466
400.590	800.160	.00655	.08062	-.00013	.00039	.00008	-.00006	.67871	-.02612	-.02540	-.02509
	GRADIENT	.00000	.00000	.00000	.00000	.00000	.00000	.00000	.00000	.00000	.00000

AEDC VA422(IA17) ORB AND ET SEPARATING(ORB DATA) (RTR286) (24 JUL 75)

REFERENCE DATA

SREF = 2890.0000 SQ.FT. XMRP = 1089.6000 IN. XO
LREF = 1290.3000 IN. YMRP = .0000 IN. YO
BREF = 1290.3000 IN. ZMRP = 375.0000 IN. ZO
SCALE = .0100

PARAMETRIC DATA

DLT-Y = 60.000 ALPHA = 5.000
BETA = .000 DLTALF = -20.000
DLTBTA = 3.000 MACH = 5.930
AILRON = .000 ELEVON = -40.000
GRID = 12.000

RUN NO. 614/ 0 GRADIENT INTERVAL = -5.00/ 5.00

DLT-X	DLT-Z	CN	CA	CLM	CY	CYN	CBL	XCP/L	CPB1	CPB2	CPBC
.457	801.430	.10828	.07266	-.02452	.00105	-.00006	.00004	.88646	-.02287	-.02218	-.02132
.402	900.280	.01583	.07692	-.00300	.00054	.00007	-.00003	.85184	-.02295	-.02243	-.02167
.494	1000.100	.00716	.07945	-.00007	.00043	.00007	-.00006	.66928	-.02272	-.02219	-.02137
	GRADIENT	.00000	.00000	.00000	.00000	.00000	.00000	.00000	.00000	.00000	.00000

ORIGINAL PAGE IS
OF POOR QUALITY

AEDC VA422(IA17) ORB AND ET SEPARATING(ORB DATA) (RTR286) (24 JUL 75)

REFERENCE DATA

SREF = 2690.0000 SQ.FT. XMRP = 1089.6000 IN. XO
LREF = 1290.3000 IN. YMRP = .0000 IN. YO
BREF = 1290.3000 IN. ZMRP = 375.0000 IN. ZO
SCALE = .0100

PARAMETRIC DATA

DLT-Y = 60.000 ALPHA = 5.000
BETA = .000 DLTALF = -20.000
DLTBTA = 3.000 MACH = 5.930
AILRON = .000 ELEVON = -40.000
GRID = 12.000

RUN NO. 615/ 0 GRADIENT INTERVAL = -5.00/ 5.00

DLT-X	DLT-Z	CN	CA	CLM	CY	CYN	CBL	XCP/L	CPB1	CPB2	CPBC
400.420	750.200	.01147	.07817	-.00154	.00053	.00007	-.00003	.79417	-.02506	-.02452	-.02426
400.380	800.210	.00709	.07960	-.00010	.00045	.00007	-.00006	.67474	-.02484	-.02431	-.02411
400.490	900.210	.00718	.08045	-.00011	.00055	.00005	-.00006	.67574	-.02419	-.02367	-.02340
400.460	1000.300	.00717	.08050	-.00014	.00052	.00005	-.00006	.67888	-.02350	-.02299	-.02262
	GRADIENT	.00000	.00000	.00000	.00000	.00000	.00000	.00000	.00000	.00000	.00000

AEDC VA422(IA17) ORB AND ET SEPARATING(ORB DATA) (RTR287) (24 JUL 75)

REFERENCE DATA

SREF = 2690.0000 SQ.FT. XMRP = 1089.6000 IN. XO
LREF = 1290.3000 IN. YMRP = .0000 IN. YO
BREF = 1290.3000 IN. ZMRP = 375.0000 IN. ZO
SCALE = .0100

PARAMETRIC DATA

DLT-Y = 60.000 ALPHA = -5.000
BETA = .000 DLTALF = .000
DLTBTA = 3.000 MACH = 5.930
AILRON = .000 ELEVON = -40.000
GRID = 11.000

RUN NO. 831/ 0 GRADIENT INTERVAL = -5.00/ 5.00

DLT-X	DLT-Z	CN	CA	CLM	CY	CYN	CBL	XCP/L	CPB1	CPB2	CPBC
.486	19.705	-.12009	.13175	.00262	.00236	.00056	-.00127	.68180	-.02487	-.02289	-.02267
.523	101.520	-.11406	.13070	.00826	.00712	.00161	-.00034	.73238	-.02522	-.02315	-.02299
.467	201.800	-.13548	.13442	.00497	.00339	.00003	-.00041	.69672	-.02558	-.02348	-.02344
.553	301.250	-.16783	.12763	-.00125	.00236	-.00090	.00037	.65258	-.02568	-.02361	-.02362
.520	400.140	-.20251	.12687	-.00085	.00191	-.00003	.00012	.65579	-.02575	-.02368	-.02375
.568	500.250	-.21066	.12784	.00125	.00181	-.00000	.00008	.66592	-.02563	-.02362	-.02373
.557	600.210	-.21082	.12808	.00118	.00180	.00001	.00008	.66558	-.02533	-.02338	-.02352
	GRADIENT	.00000	.00000	.00000	.00000	.00000	.00000	.00000	.00000	.00000	.00000

RUN NO. 832/ 0 GRADIENT INTERVAL = -5.00/ 5.00

DLT-X	DLT-Z	CN	CA	CLM	CY	CYN	CBL	XCP/L	CPB1	CPB2	CPBC
400.510	23.692	-.08303	.12961	.01858	.00471	.00279	.00175	.88384	-.02612	-.02411	-.02368
400.440	100.180	-.11362	.13374	.00801	.00464	.00020	-.00050	.73050	-.02496	-.02307	-.02239
400.510	197.830	-.14859	.12803	-.00058	.00234	-.00004	.00085	.65610	-.02450	-.02265	-.02202
400.340	298.270	-.19223	.12648	-.00244	.00210	-.00001	.00021	.64729	-.02437	-.02251	-.02197
400.420	399.910	-.21083	.12743	.00120	.00181	.00001	.00008	.66571	-.02439	-.02248	-.02201
400.470	500.210	-.21084	.12808	.00127	.00176	.00001	.00008	.66602	-.02446	-.02249	-.02209
400.500	600.160	-.21093	.12801	.00126	.00182	.00001	.00008	.66598	-.02466	-.02268	-.02239
	GRADIENT	.00000	.00000	.00000	.00000	.00000	.00000	.00000	.00000	.00000	.00000

AEDC VA422(IA17) ORB AND ET SEPARATING(ORB DATA) (RTR288) (24 JUL 75)

REFERENCE DATA

SREF = 2690.0000 SQ.FT. XMRP = 1089.6000 IN. XO
LREF = 1290.3000 IN. YMRP = .0000 IN. YO
BREF = 1290.3000 IN. ZMRP = 375.0000 IN. ZO
SCALE = .0100

PARAMETRIC DATA

DLT-Y = 60.000 ALPHA = -5.000
BETA = .000 DLTALF = -10.000
DLTBTA = 3.000 MACH = 5.930
AILRON = .000 ELEVON = -40.000
GRID = 11.000

RUN NO. 629/ 0 GRADIENT INTERVAL = -5.00/ 5.00

DLT-X	DLT-Z	CN	CA	CLM	CY	CYN	CBL	XCP/L	CPB1	CPB2	CPBC
.521	403.940	-.02930	.12290	-.02209	.00209	-.00012	.00030	-.09394	-.01688	-.01551	-.01528
.522	500.940	-.16344	.12079	-.01035	.00210	-.00009	.00016	.59669	-.01804	-.01658	-.01690
.444	600.240	-.20905	.12610	.00103	.00169	.00001	.00009	.66495	-.01796	-.01649	-.01715
.447	750.160	-.21027	.12793	.00123	.00179	-.00000	.00009	.66584	-.01564	-.01422	-.01506
.191	800.370	-.21011	.12785	.00124	.00167	.00000	.00009	.66593	-.01389	-.01251	-.01333
	GRADIENT	.00000	.00000	.00000	.00000	.00000	.00000	.00000	.00000	.00000	.00000

RUN NO. 630/ 0 GRADIENT INTERVAL = -5.00/ 5.00

DLT-X	DLT-Z	CN	CA	CLM	CY	CYN	CBL	XCP/L	CPB1	CPB2	CPBC
400.520	397.040	-.16920	.12344	-.00676	.00215	-.00005	.00022	.62008	-.01369	-.01242	-.01115
400.430	499.580	-.20767	.12607	.00051	.00186	.00002	.00010	.66247	-.01350	-.01233	-.01129
400.410	599.930	-.20973	.12748	.00125	.00185	-.00000	.00009	.66594	-.01439	-.01329	-.01262
400.400	750.210	-.21009	.12789	.00121	.00184	.00001	.00009	.66578	-.01717	-.01595	-.01581
400.380	800.140	-.21035	.12803	.00125	.00172	-.00001	.00009	.66595	-.01845	-.01716	-.01715
	GRADIENT	.00000	.00000	.00000	.00000	.00000	.00000	.00000	.00000	.00000	.00000

AEDC VA422(IA17) ORB AND ET SEPARATING(ORB DATA) (RTR290) (24 JUL 75)

REFERENCE DATA

SREF = 2690.0000 SQ.FT. XMRP = 1089.6000 IN. XO
LREF = 1290.3000 IN. YMRP = .0000 IN. YO
BREF = 1290.3000 IN. ZMRP = 375.0000 IN. ZO
SCALE = .0100

PARAMETRIC DATA

DLT-Y = 60.000 ALPHA = -5.000
BETA = .000 DLTALF = -20.000
DLTBTA = 3.000 MACH = 5.930
AILRON = .000 ELEVON = -40.000
GRID = 11.000

RUN NO. 627/ 0 GRADIENT INTERVAL = -5.00/ 5.00

DLT-X	DLT-Z	CN	CA	CLM	CY	CYN	CBL	XCP/L	CPB1	CPB2	CPBC
.410	804.380	-.02077	.12053	-.02330	.00255	-.00027	.00034	-.46152	-.01021	-.00906	-.00794
.493	900.800	-.16843	.11880	-.01068	.00134	-.00006	-.00047	.59595	-.01042	-.00927	-.00827
.417	1000.400	-.20953	.12522	.00108	.00177	.00001	.00009	.66514	-.00988	-.00878	-.00786
	GRADIENT	.00000	.00000	.00000	.00000	.00000	.00000	.00000	.00000	.00000	.00000

AEDC VA422(IA17) ORB AND ET SEPARATING(ORB DATA) (RTR290) (24 JUL 75)

REFERENCE DATA

SREF = 2690.0000 SQ.FT. XMRP = 1089.6000 IN. XO
LREF = 1290.3000 IN. YMRP = .0000 IN. YO
BREF = 1290.3000 IN. ZMRP = 375.0000 IN. ZO
SCALE = .0100

PARAMETRIC DATA

DLT-Y = 60.000 ALPHA = -5.000
BETA = .000 DLTALF = -20.000
DLTBTA = 3.000 MACH = 5.930
AILRON = .000 ELEVON = -40.000
GRID = 11.000

RUN NO. 628/ 0 GRADIENT INTERVAL = -5.00/ 5.00

DLT-X	DLT-Z	CN	CA	CLM	CY	CYN	CBL	XCP/L	CPB1	CPB2	CPBC
400.430	750.930	-.17815	.11399	-.00512	.00134	-.00019	-.00041	.63126	-.00858	-.00655	-.00426
400.360	800.550	-.20071	.11796	-.00052	.00146	-.00002	-.00015	.65739	-.01399	-.01244	-.01132
400.520	900.300	-.20883	.12440	.00097	.00167	-.00001	.00008	.66466	-.01527	-.01397	-.01390
400.400	1000.400	-.21001	.12769	.00126	.00184	.00001	.00009	.66600	-.01356	-.01235	-.01223
	GRADIENT	.00000	.00000	.00000	.00000	.00000	.00000	.00000	.00000	.00000	.00000

AEDC VA422(IA17) ORB AND ET SEPARATING(ORB DATA) (RTR291) (24 JUL 75)

REFERENCE DATA

SREF = 2690.0000 SQ.FT. XMRP = 1089.6000 IN. XO
LREF = 1290.3000 IN. YMRP = .0000 IN. YO
BREF = 1290.3000 IN. ZMRP = 375.0000 IN. ZO
SCALE = .0100

PARAMETRIC DATA

DLT-Y = 60.000 ALPHA = -10.000
BETA = .000 DLTALF = .000
DLTBTA = 3.000 MACH = 5.930
AILRON = .000 ELEVON = -40.000
GRID = 10.000

RUN NO. 640/ 0 GRADIENT INTERVAL = -5.00/ 5.00

DLT-X	DLT-Z	CN	CA	CLM	CY	CYN	CBL	XCP/L	CPB1	CPB2	CPBC
.452	31.664	-.16426	.16028	.00692	.00834	.00204	-.00045	.70214	-.01671	-.01505	-.01393
.529	102.590	-.19910	.15636	.00865	.00521	.00213	.00108	.70344	-.01687	-.01524	-.01400
.519	202.280	-.24691	.14888	.00221	.00222	.00004	.00007	.66897	-.01773	-.01620	-.01499
.404	300.590	-.28755	.14833	-.00151	.00169	.00004	-.00027	.65476	-.01790	-.01648	-.01544
.381	400.180	-.30443	.14915	.00120	.00171	.00005	-.00028	.66396	-.01730	-.01599	-.01515
.491	500.220	-.30498	.14996	.00129	.00162	.00003	-.00029	.66423	-.01607	-.01477	-.01410
	GRADIENT	.00000	.00000	.00000	.00000	.00000	.00000	.00000	.00000	.00000	.00000

RUN NO. 641/ 0 GRADIENT INTERVAL = -5.00/ 5.00

DLT-X	DLT-Z	CN	CA	CLM	CY	CYN	CBL	XCP/L	CPB1	CPB2	CPBC
400.440	32.477	-.17717	.15710	.01922	.00618	.00183	.00093	.76851	-.01750	-.01563	-.01389
400.430	103.130	-.19915	.15303	.00642	.00537	-.00001	.00107	.69223	-.01887	-.01711	-.01533
400.530	201.480	-.25958	.14843	-.00144	.00209	.00012	-.00033	.65447	-.01969	-.01803	-.01628
400.530	300.530	-.29651	.14807	-.00061	.00164	.00002	-.00025	.65794	-.02008	-.01850	-.01689
400.430	400.310	-.30488	.14965	.00123	.00159	.00005	-.00028	.66403	-.01959	-.01806	-.01659
400.410	500.140	-.30525	.14999	.00129	.00165	.00003	-.00029	.66424	-.01885	-.01728	-.01568
	GRADIENT	.00000	.00000	.00000	.00000	.00000	.00000	.00000	.00000	.00000	.00000

ORIGINAL PAGE IS OF POOR QUALITY

DATE 25 JUL 75 TABULATED SOURCE DATA - 1A17A

AEDC VA422(1A17) ORB AND ET SEPARATING(ORB DATA) (RTD2S2) (24 JUL 75)

REFERENCE DATA

SREF = 2690.0000 SQ.FT. XMRP = 1089.6000 IN. XO
LREF = 1290.3000 IN. YMRP = .0000 IN. YO
BREF = 1290.3000 IN. ZMRP = 375.0000 IN. ZO
SCALE = .0100

PARAMETRIC DATA

DLT-Y = 60.000 ALPHA = -10.000
BETA = .000 DLTALF = -10.000
DLTBTA = 3.000 MACH = 5.930
AILRON = .000 ELEVON = -40.000
GRID = 10.000

RUN NO. 838/ 0 GRADIENT INTERVAL = -5.00/ 5.00

DLT-X	DLT-Z	CN	CA	CLM	CY	CYN	CBL	XCP/L	CPB1	CPB2	CPBC
.490	403.540	-.12115	.14393	-.02486	.00229	.00008	-.00048	.45477	-.01204	-.01028	-.00831
.363	501.600	-.21406	.13834	-.01942	.00120	-.00021	-.00085	.56929	-.01445	-.01269	-.01043
.299	600.520	-.29278	.14332	-.00186	.00179	.00005	-.00026	.65366	-.01785	-.01629	-.01478
.440	700.240	-.30395	.14878	.00105	.00163	.00005	-.00028	.66345	-.01781	-.01642	-.01545
.687	799.920	-.30527	.15011	.00130	.00170	.00005	-.00028	.66426	-.01672	-.01533	-.01452
	GRADIENT	.00000	.00000	.00000	.00000	.00000	.00000	.00000	.00000	.00000	.00000

RUN NO. 839/ 0 GRADIENT INTERVAL = -5.00/ 5.00

DLT-X	DLT-Z	CN	CA	CLM	CY	CYN	CBL	XCP/L	CPB1	CPB2	CPBC
400.380	397.340	-.25401	.14240	-.00938	.00230	-.00001	-.00002	.62306	-.00307	-.00178	.00115
400.350	499.420	-.30175	.14634	.00059	.00176	.00003	-.00026	.66195	-.00177	-.00034	.00180
400.290	600.140	-.30237	.14781	.00092	.00168	.00004	-.00028	.66305	-.00306	-.00161	-.00039
400.310	700.190	-.30385	.14956	.00123	.00153	.00002	-.00028	.66405	-.00559	-.00425	-.00359
400.490	800.170	-.30450	.14980	.00127	.00165	.00004	-.00029	.66418	-.00865	-.00735	-.00691
	GRADIENT	.00000	.00000	.00000	.00000	.00000	.00000	.00000	.00000	.00000	.00000

AEDC VA422(IA17) ORB AND ET SEPARATING(ORB DATA) (RTR293) (24 JUL 75)

REFERENCE DATA

SREF = 2690.0000 SQ.FT. XMRP = 1089.6000 IN. XO
LREF = 1290.3000 IN. YMRP = .0000 IN. YO
BREF = 1290.3000 IN. ZMRP = 375.0000 IN. ZO
SCALE = .0100

PARAMETRIC DATA

DLT-Y = 60.000 ALPHA = .000
BETA = 3.000 DLTALF = .000
DLTBTA = 3.000 MACH = 5.930
AILRON = 15.000 ELEVON = .000
GRID = 14.000

RUN NO. 467/ 0 GRADIENT INTERVAL = -5.00/ 5.00

DLT-X	DLT-Z	CN	CA	CLM	CY	CYN	CBL	XCP/L	CPB1	CPB2	CPBC
.498	18.855	-.01489	.08412	-.01245	-.04305	-.00203	-.00039	-.17823	-.02567	-.02543	-.02521
.459	99.456	-.00245	.09150	-.00238	-.04133	-.00021	.00033	.00000	-.02550	-.02522	-.02504
.606	200.770	.02156	.08587	-.00135	-.03795	-.00052	-.00030	.72270	-.02536	-.02505	-.02491
.521	301.880	.03341	.08497	-.01377	-.03099	-.00237	.00361	1.07200	-.02522	-.02490	-.02475
.547	401.070	-.00847	.08050	-.01808	-.03380	-.00205	.00588	-2.13180	-.02511	-.02478	-.02462
.540	500.090	-.04887	.07885	-.01235	-.03521	-.00149	.00300	.40734	-.02492	-.02458	-.02445
.880	597.070	-.05447	.07967	-.01083	-.03547	-.00144	.00287	.46119	-.02475	-.02437	-.02423
	GRADIENT	.00000	.00000	.00000	.00000	.00000	.00000	.00000	.00000	.00000	.00000

AEDC VA422(IA17) ORB AND ET SEPARATING(ORB DATA) (RTR294) (24 JUL 75)

REFERENCE DATA

SREF = 2690.0000 SQ.FT. XMRP = 1089.6000 IN. XO
LREF = 1290.3000 IN. YMRP = .0000 IN. YO
BREF = 1290.3000 IN. ZMRP = 375.0000 IN. ZO
SCALE = .0100

PARAMETRIC DATA

DLT-Y = 60.000 ALPHA = .000
BETA = 3.000 DLTALF = -10.000
DLTBTA = 3.000 MACH = 5.930
AILRON = 15.000 ELEVON = .000
GRID = 14.000

RUN NO. 466/ 0 GRADIENT INTERVAL = -5.00/ 5.00

DLT-X	DLT-Z	CN	CA	CLM	CY	CYN	CBL	XCP/L	CPB1	CPB2	CPBC
.446	403.640	.14823	.08539	-.03075	-.03030	-.00265	.00443	.88748	-.02311	-.02278	-.02261
.505	501.780	.03575	.08087	-.02439	-.03215	-.00262	.00841	1.34240	-.02306	-.02277	-.02266
.497	600.290	-.03708	.07787	-.01523	-.03477	-.00164	.00338	.24934	-.02279	-.02255	-.02245
.513	750.030	-.05442	.07967	-.01080	-.03544	-.00144	.00287	.46154	-.02171	-.02153	-.02143
-.068	802.200	-.05425	.07979	-.01083	-.03553	-.00143	.00287	.46039	-.02092	-.02077	-.02056
	GRADIENT	.00000	.00000	.00000	.00000	.00000	.00000	.00000	.00000	.00000	.00000

AEDC VA422(IA17) ORB AND ET SEPARATING(ORB DATA) (RTR295) (24 JUL 75)

REFERENCE DATA

SREF = 2690.0000 SQ.FT. XMRP = 1089.6000 IN. XO
LREF = 1290.3000 IN. YMRP = .0000 IN. YO
BREF = 1290.3000 IN. ZMRP = 375.0000 IN. ZO
SCALE = .0100

PARAMETRIC DATA

DLT-Y = 60.000 ALPHA = .000
BETA = 3.000 DLTALF = -20.000
DLTBTA = 3.000 MACH = 5.930
AILRON = 15.000 ELEVON = .000
GRID = 14.000

RUN NO. 465/ 0 GRADIENT INTERVAL = -5.00/ 5.00

DLT-X	DLT-Z	CN	CA	CLM	CY	CYN	CBL	XCP/L	CPB1	CPB2	CPBC
.560	802.110	.07598	.07226	-.03955	-.03357	-.00158	.00491	1.18060	-.01838	-.01834	-.01721
.488	900.550	-.03443	.07391	-.01720	-.03513	-.00154	.00261	.16031	-.01877	-.01869	-.01770
.430	1000.200	-.05418	.07833	-.01078	-.03557	-.00151	.00286	.46102	-.01858	-.01846	-.01739
	GRADIENT	.00000	.00000	.00000	.00000	.00000	.00000	.00000	.00000	.00000	.00000

AEDC VA422(IA17) ORB AND ET SEPARATING(ORB DATA) (RTR296) (24 JUL 75)

REFERENCE DATA

SREF = 2690.0000 SQ.FT. XMRP = 1089.6000 IN. XO
LREF = 1290.3000 IN. YMRP = .0000 IN. YO
BREF = 1290.3000 IN. ZMRP = 375.0000 IN. ZO
SCALE = .0100

PARAMETRIC DATA

DLT-Y = 50.000 ALPHA = .000
BETA = .000 DLTALF = .000
DLTBTA = 3.000 MACH = 5.930
AILRON = 15.000 ELEVON = .000
GRID = 13.000

RUN NO. 477/ 0 GRADIENT INTERVAL = -5.00/ 5.00

DLT-X	DLT-Z	CN	CA	CLM	CY	CYN	CBL	XCP/L	CPB1	CPB2	CPBC
.462	19.054	-.01622	.08365	-.01224	-.00365	.00006	.00124	-.09476	-.02727	-.02737	-.02673
.538	99.625	-.00814	.09050	-.00289	.00036	.00155	.00157	.30542	-.02730	-.02746	-.02683
.557	200.410	.01779	.08614	-.00247	.00140	.00045	.00145	.79876	-.02731	-.02753	-.02693
.453	302.100	.04062	.08437	-.01573	.00285	-.00070	.00377	1.04720	-.02728	-.02755	-.02695
.519	401.020	-.00488	.07806	-.01833	.00057	-.00012	.00418	-3.09810	-.02726	-.02762	-.02703
.558	500.140	-.04423	.07669	-.01337	-.00017	.00029	.00255	.35768	-.02730	-.02772	-.02715
.643	597.180	-.04969	.07765	-.01183	-.00033	.00038	.00260	.42199	-.02719	-.02758	-.02707
	GRADIENT	.00000	.00000	.00000	.00000	.00000	.00000	.00000	.00000	.00000	.00000

RUN NO. 478/ 0 GRADIENT INTERVAL = -5.00/ 5.00

DLT-X	DLT-Z	CN	CA	CLM	CY	CYN	CBL	XCP/L	CPB1	CPB2	CPBC
400.460	19.974	.04482	.08428	.00791	.00328	.00132	.00123	.48344	-.02818	-.02810	-.02744
400.430	97.828	.03310	.08513	-.00229	.00248	-.00002	.00223	.72924	-.02743	-.02738	-.02649
400.510	198.990	.05027	.08367	-.01613	.00447	-.00099	.00503	.98081	-.02701	-.02685	-.02600
400.530	297.970	-.00000	.07834	-.01919	.00076	-.00018	.00438	.00000	-.02695	-.02675	-.02600
400.530	399.100	-.04428	.07645	-.01344	-.00015	.00035	.00255	.35641	-.02697	-.02677	-.02606
400.570	500.110	-.04976	.07756	-.01182	-.00046	.00037	.00259	.42252	-.02696	-.02674	-.02600
400.650	600.200	-.04972	.07777	-.01182	-.00047	.00038	.00259	.42220	-.02702	-.02679	-.02610
	GRADIENT	.00000	.00000	.00000	.00000	.00000	.00000	.00000	.00000	.00000	.00000

AEDC VA422(IA17) ORB AND ET SEPARATING(ORB DATA) (RTR297) (24 JUL 75)

REFERENCE DATA

SREF = 2690.0000 SQ.FT. XMRP = 1089.6000 IN. XO
LREF = 1290.3000 IN. YMRP = .0000 IN. YO
BREF = 1290.3000 IN. ZMRP = 375.0000 IN. ZO
SCALE = .0100

PARAMETRIC DATA

DLT-Y = 60.000 ALPHA = .000
BETA = .000 DLTALF = -10.000
DLTBTA = 3.000 MACH = 5.930
AILRON = 15.000 ELEVON = .000
GRID = 13.000

RUN NO. 475/ 0 GRADIENT INTERVAL = -5.00/ 5.00

DLT-X	DLT-Z	CN	CA	CLM	CY	CYN	CBL	XCP/L	CPB1	CPB2	CPBC
.435	403.640	.15753	.08590	-.03275	.00273	-.00091	.00467	.86791	-.02212	-.02200	-.02186
.506	501.690	.03967	.07860	-.02449	.00144	-.00070	.00602	1.29330	-.02187	-.02190	-.02182
.384	600.110	-.03237	.07559	-.01614	-.00007	.00026	.00270	.16136	-.02137	-.02148	-.02148
.438	750.080	-.04906	.07767	-.01181	-.00034	.00036	.00260	.41932	-.01987	-.01996	-.02007
-.213	802.330	-.04907	.07764	-.01181	-.00039	.00036	.00260	.41939	-.01881	-.01885	-.01894
	GRADIENT	.00000	.00000	.00000	.00000	.00000	.00000	.00000	.00000	.00000	.00000

RUN NO. 476/ 0 GRADIENT INTERVAL = -5.00/ 5.00

DLT-X	DLT-Z	CN	CA	CLM	CY	CYN	CBL	XCP/L	CPB1	CPB2	CPBC
400.370	395.850	.03742	.07772	-.02537	.00147	-.00066	.00609	1.33790	-.02105	-.02060	-.01987
400.440	498.420	-.03506	.07561	-.01566	.00001	.00026	.00264	.21335	-.02069	-.02012	-.01947
400.340	600.180	-.04915	.07736	-.01184	-.00034	.00036	.00260	.41899	-.02099	-.02039	-.01988
400.500	750.210	-.04933	.07774	-.01185	-.00051	.00038	.00259	.41971	-.02212	-.02170	-.02139
400.540	800.240	-.04937	.07783	-.01185	-.00041	.00037	.00259	.42003	-.02273	-.02241	-.02214
	GRADIENT	.00000	.00000	.00000	.00000	.00000	.00000	.00000	.00000	.00000	.00000

AEDC VA422(IA17) ORB AND ET SEPARATING(ORB DATA) (RTR299) (24 JUL 75)

REFERENCE DATA

SREF = 2690.0000 SQ.FT. XMRP = 1089.6000 IN. XO
LREF = 1290.3000 IN. YMRP = .0000 IN. YO
BREF = 1290.3000 IN. ZMRP = 375.0000 IN. ZO
SCALE = .0100

PARAMETRIC DATA

DLT-Y = 60.000 ALPHA = .000
BETA = .000 DLTALF = -20.000
DLTBTA = 3.000 MACH = 5.930
AILRON = 15.000 ELEVON = .000
GRID = 13.000

RUN NO. 480/ 0 GRADIENT INTERVAL = -5.00/ 5.00

DLT-X	DLT-Z	CN	CA	CLM	CY	CYN	CBL	XCP/L	CPB1	CPB2	CPBC
.402	802.080	.07678	.07037	-.03877	-.00046	.00008	.00340	1.16490	-.01713	-.01656	-.01524
.483	900.620	-.03210	.07207	-.01719	-.00019	.00032	.00222	.12448	-.01750	-.01695	-.01555
.435	1000.300	-.04902	.07529	-.01180	-.00031	.00037	.00259	.41933	-.01780	-.01723	-.01572
	GRADIENT	.00000	.00000	.00000	.00000	.00000	.00000	.00000	.00000	.00000	.00000

ORIGINAL PAGE IS OF POOR QUALITY

AEDC VA422(IA17) ORB AND ET SEPARATING(ORB DATA) (RTR299) (24 JUL 75)

REFERENCE DATA

SREF = 2690.0000 SQ.FT. XMRP = 1089.6000 IN. XO
LREF = 1290.3000 IN. YMRP = .0000 IN. YO
BREF = 1290.3000 IN. ZMRP = 375.0000 IN. ZO
SCALE = .0100

PARAMETRIC DATA

DLT-Y = 60.000 ALPHA = .000
BETA = .000 DLTALF = -20.000
DLTBTA = 3.000 MACH = 5.930
AILRON = 15.000 ELEVON = .000
GRID = 13.000

RUN NO. 474/ 0 GRADIENT INTERVAL = -5.00/ 5.00

DLT-X	DLT-Z	CN	CA	CLM	CY	CYN	CBL	XCP/L	CPB1	CPB2	CPBC
400.530	750.300	-.04861	.07277	-.01184	-.00035	.00031	.00257	.41650	-.01605	-.01596	-.01492
400.430	800.280	-.04886	.07313	-.01186	-.00024	.00031	.00258	.41727	-.01761	-.01755	-.01700
400.490	900.430	-.04893	.07538	-.01179	-.00027	.00032	.00259	.41907	-.01734	-.01730	-.01708
400.440	1000.300	-.04903	.07760	-.01182	-.00053	.00034	.00259	.41894	-.01579	-.01569	-.01537
	GRADIENT	.00000	.00000	.00000	.00000	.00000	.00000	.00000	.00000	.00000	.00000

AEDC VA422(IA17) ORB AND ET SEPARATING(ORB DATA) (RTR300) (24 JUL 75)

REFERENCE DATA

SREF = 2690.0000 SQ.FT. XMRP = 1089.6000 IN. XO
LREF = 1290.3000 IN. YMRP = .0000 IN. YO
BREF = 1290.3000 IN. ZMRP = 375.0000 IN. ZO
SCALE = .0100

PARAMETRIC DATA

DLT-Y = 60.000 ALPHA = 5.000
BETA = .000 DLTALF = .000
DLTBTA = 3.000 MACH = 5.930
AILRON = 15.000 ELEVON = .000
GRID = 12.000

RUN NO. 490/ 0 GRADIENT INTERVAL = -5.00/ 5.00

DLT-X	DLT-Z	CN	CA	CLM	CY	CYN	CBL	XCP/L	CPB1	CPB2	CPBC
.618	19.378	.03901	.06478	-.01371	-.00476	-.00108	.00090	1.01140	-.02909	-.02873	-.02846
.511	98.266	.03986	.07683	-.00526	-.00227	.00008	.00145	.79191	-.02885	-.02844	-.02814
.612	199.110	.06716	.07497	.00778	-.00018	.00048	.00146	.54412	-.02860	-.02812	-.02791
.614	300.070	.11706	.07791	-.00171	.00029	-.00012	.00195	.67457	-.02822	-.02776	-.02755
.630	401.940	.15426	.07759	-.01667	.00367	-.00171	.00459	.76807	-.02800	-.02754	-.02729
.556	501.220	.10318	.07108	-.01850	.00192	-.00134	.00594	.83926	-.02788	-.02746	-.02717
.729	598.530	.05283	.06917	-.01111	.00099	-.00055	.00313	.87033	-.02793	-.02756	-.02727
	GRADIENT	.00000	.00000	.00000	.00000	.00000	.00000	.00000	.00000	.00000	.00000

RUN NO. 491/ 0 GRADIENT INTERVAL = -5.00/ 5.00

DLT-X	DLT-Z	CN	CA	CLM	CY	CYN	CBL	XCP/L	CPB1	CPB2	CPBC
400.450	19.972	.09013	.07443	.01258	-.00006	.00148	.00069	.52047	-.03038	-.03010	-.02970
400.480	98.779	.09279	.07471	.00620	-.00050	.00047	.00070	.59320	-.03010	-.02985	-.02935
400.430	200.020	.14402	.07933	-.00669	.00215	-.00096	.00218	.70642	-.02993	-.02961	-.02910
400.540	298.970	.14762	.07309	-.01939	.00234	-.00136	.00684	.79138	-.02994	-.02955	-.02910
400.520	397.980	.08469	.07028	-.01678	.00172	-.00109	.00502	.85813	-.02990	-.02948	-.02906
400.550	499.380	.04764	.06540	-.00983	.00090	-.00052	.00314	.86627	-.02984	-.02939	-.02895
400.540	599.990	.04580	.07054	-.00912	.00072	-.00051	.00317	.85913	-.02961	-.02912	-.02862
	GRADIENT	.00000	.00000	.00000	.00000	.00000	.00000	.00000	.00000	.00000	.00000

AEDC VA422(IA17) ORB AND ET SEPARATING(ORB DATA) (RTR301) (24 JUL 75)

REFERENCE DATA

SREF = 2690.0000 SQ.FT. XMRP = 1089.6000 IN. XO
LREF = 1290.3000 IN. YMRP = .0000 IN. YO
BREF = 1290.3000 IN. ZMRP = 375.0000 IN. ZO
SCALE = .0100

PARAMETRIC DATA

DLT-Y = 60.000 ALPHA = 5.000
BETA = .000 DLTALF = -10.000
DLTBTA = 3.000 MACH = 5.930
AILRON = 15.000 ELEVON = .000
GRID = 12.000

RUN NO. 488/ 0 GRADIENT INTERVAL = -5.00/ 5.00

DLT-X	DLT-Z	CN	CA	CLM	CY	CYN	CBL	XCP/L	CPB1	CPB2	CPBC
.533	400.980	.18467	.07822	-.00925	.00085	-.00021	.00231	.70750	-.02509	-.02483	-.02427
.494	502.710	.20243	.08018	-.02184	.00487	-.00218	.00516	.76790	-.02477	-.02452	-.02389
.491	601.700	.13004	.07163	-.02307	.00257	-.00172	.00757	.83736	-.02448	-.02426	-.02353
.601	750.050	.04823	.06887	-.00969	.00084	-.00054	.00315	.86085	-.02404	-.02384	-.02306
-.525	803.170	.04669	.06997	-.00909	.00086	-.00052	.00318	.85477	-.02364	-.02346	-.02254
	GRADIENT	.00000	.00000	.00000	.00000	.00000	.00000	.00000	.00000	.00000	.00000

RUN NO. 489/ 0 GRADIENT INTERVAL = -5.00/ 5.00

DLT-X	DLT-Z	CN	CA	CLM	CY	CYN	CBL	XCP/L	CPB1	CPB2	CPBC
400.490	398.310	.18998	.07346	-.02566	.00341	-.00183	.00904	.79568	-.02495	-.02464	-.02383
400.490	497.670	.10464	.07073	-.02035	.00230	-.00144	.00634	.85453	-.02485	-.02456	-.02379
400.460	598.990	.05019	.06856	-.01052	.00081	-.00053	.00313	.86963	-.02499	-.02467	-.02397
400.510	750.130	.04635	.07045	-.00911	.00082	-.00053	.00318	.85664	-.02517	-.02485	-.02420
400.570	800.040	.04633	.07047	-.00913	.00087	-.00052	.00318	.85711	-.02555	-.02521	-.02469
	GRADIENT	.00000	.00000	.00000	.00000	.00000	.00000	.00000	.00000	.00000	.00000

AEDC VA422(IA17) ORB AND ET SEPARATING(ORB DATA) (RTR303) (24 JUL 75)

REFERENCE DATA

SREF = 2690.0000 SQ.FT. XMRP = 1089.6000 IN. XO
LREF = 1290.3000 IN. YMRP = .0000 IN. YO
BREF = 1290.3000 IN. ZMRP = 375.0000 IN. ZO
SCALE = .0100

PARAMETRIC DATA

DLT-Y = 60.000 ALPHA = 5.000
BETA = .000 DLTALF = -20.000
DLTBTA = 3.000 MACH = 5.930
AILRON = 15.000 ELEVON = .000
GRID = 12.000

RUN NO. 493/ 0 GRADIENT INTERVAL = -5.00/ 5.00

DLT-X	DLT-Z	CN	CA	CLM	CY	CYN	CBL	XCP/L	CPB1	CPB2	CPBC
.473	801.010	.14015	.06524	-.03518	.00164	-.00139	.00640	.91091	-.02087	-.02074	-.01906
.387	900.210	.05433	.06673	-.01163	.00078	-.00051	.00309	.87405	-.02127	-.02109	-.01933
.497	1000.200	.04634	.06785	-.00900	.00077	-.00052	.00316	.85421	-.02191	-.02160	-.01987
	GRADIENT	.00000	.00000	.00000	.00000	.00000	.00000	.00000	.00000	.00000	.00000

AEDC VA422(IA17) ORB AND ET SEPARATING(ORB DATA) (RTR303) (24 JUL 75)

REFERENCE DATA

SREF = 2690.0000 SQ.FT. XMRP = 1089.6000 IN. XO
LREF = 1290.3000 IN. YMRP = .0000 IN. YO
BREF = 1290.3000 IN. ZMRP = 375.0000 IN. ZO
SCALE = .0100

PARAMETRIC DATA

DLT-Y = 60.000 ALPHA = 5.000
BETA = .000 DLTALF = -20.000
DLTBTA = 3.000 MACH = 5.930
AILRON = 15.000 ELEVON = .000
GRID = 12.000

RUN NO. 487/ 0 GRADIENT INTERVAL = -5.00/ 5.00

DLT-X	DLT-Z	CN	CA	CLM	CY	CYN	CBL	XCP/L	CPB1	CPB2	CPBC
490.410	750.160	.05060	.06781	-.01036	.00089	-.00054	.00314	.86466	-.02611	-.02569	-.02512
400.350	800.230	.04692	.06887	-.00903	.00083	-.00053	.00317	.85237	-.02609	-.02564	-.02519
400.440	900.270	.04697	.07013	-.00909	.00074	-.00054	.00318	.85347	-.02565	-.02519	-.02469
400.450	1000.200	.04690	.07034	-.00912	.00086	-.00054	.00318	.85457	-.02512	-.02465	-.02404
	GRADIENT	.00000	.00000	.00000	.00000	.00000	.00000	.00000	.00000	.00000	.00000

AEDC VA422(IA17) ORB AND ET SEPARATING(ORB DATA) (RTR304) (24 JUL 75)

REFERENCE DATA

SREF = 2690.0000 SQ.FT. XMRP = 1089.6000 IN. XO
LREF = 1290.3000 IN. YMRP = .0000 IN. YO
BREF = 1290.3000 IN. ZMRP = 375.0000 IN. ZO
SCALE = .0100

PARAMETRIC DATA

DLT-Y = 60.000 ALPHA = -5.000
BETA = .000 DLTALF = .000
DLTBTA = 3.000 MACH = 5.930
AILRON = 15.000 ELEVON = .000
GRID = 11.000

RUN NO. 503/ 0 GRADIENT INTERVAL = -5.00/ 5.00

DLT-X	DLT-Z	CN	CA	CLM	CY	CYN	CBL	XCP/L	CPB1	CPB2	CPBC
.582	19.703	-.06027	.10623	-.00966	.00066	.00090	.00191	.49979	-.02563	-.02518	-.02472
.516	101.420	-.05038	.10139	-.00528	.00571	.00123	.00259	.55526	-.02586	-.02545	-.02498
.530	201.890	-.06104	.10009	-.01147	.00168	.00023	.00367	.47204	-.02643	-.02602	-.02576
.408	301.220	-.09490	.09324	-.01726	.00048	.00030	.00412	.47807	-.02648	-.02606	-.02582
.576	400.190	-.13344	.09162	-.01545	.00003	.00051	.00324	.54424	-.02660	-.02620	-.02600
.522	500.300	-.14210	.09236	-.01338	-.00025	.00057	.00317	.56582	-.02653	-.02611	-.02601
.594	600.160	-.14214	.09270	-.01342	-.00015	.00056	.00317	.56560	-.02619	-.02580	-.02573
	GRADIENT	.00000	.00000	.00000	.00000	.00000	.00000	.00000	.00000	.00000	.00000

RUN NO. 504/ 0 GRADIENT INTERVAL = -5.00/ 5.00

DLT-X	DLT-Z	CN	CA	CLM	CY	CYN	CBL	XCP/L	CPB1	CPB2	CPBC
400.440	23.621	-.01821	.09852	.00438	.00374	.00200	.00413	.90064	-.02698	-.02594	-.02510
400.540	97.261	-.04029	.09977	-.00818	.00314	.00050	.00334	.45707	-.02561	-.02473	-.02367
400.390	197.910	-.07422	.09428	-.01706	.00085	.00017	.00506	.43010	-.02507	-.02428	-.02325
400.380	298.290	-.12181	.09168	-.01719	.00017	.00050	.00348	.51868	-.02498	-.02426	-.02336
400.410	399.900	-.14187	.09201	-.01341	-.00017	.00054	.00317	.56550	-.02506	-.02436	-.02358
400.380	500.180	-.14201	.09253	-.01336	-.00023	.00056	.00317	.56593	-.02510	-.02446	-.02374
400.430	600.020	-.14202	.09252	-.01339	-.00032	.00055	.00317	.56570	-.02532	-.02473	-.02412
	GRADIENT	.00000	.00000	.00000	.00000	.00000	.00000	.00000	.00000	.00000	.00000

AEDC VA422(IA17) ORB AND ET SEPARATING(ORB DATA) (RTR305) (24 JUL 75)

REFERENCE DATA

SREF = 2690.0000 SQ.FT. XMRP = 1089.6000 IN. XO
LREF = 1290.3000 IN. YMRP = .0000 IN. YO
BREF = 1290.3000 IN. ZMRP = 375.0000 IN. ZO
SCALE = .0100

PARAMETRIC DATA

DLT-Y = 60.000 ALPHA = -5.000
BETA = .000 DLTALF = -10.000
DLTBTA = 3.000 MACH = 5.930
AILRON = 15.000 ELEVON = .000
GRID = 11.000

RUN NO. 501/ 0 GRADIENT INTERVAL = -5.00/ 5.00

DLT-X	DLT-Z	CN	CA	CLM	CY	CYN	CBL	XCP/L	CPB1	CPB2	CPBC
.434	403.950	.05830	.09184	-.04328	.00057	-.00043	.00573	1.40230	-.01868	-.01855	-.01843
.455	500.920	-.09321	.08733	-.02498	.00044	.00045	.00361	.39199	-.01897	-.01885	-.01905
.420	600.310	-.14098	.09107	-.01360	-.00015	.00052	.00317	.56356	-.01849	-.01831	-.01880
.398	750.180	-.14146	.09244	-.01337	-.00023	.00054	.00317	.56548	-.01621	-.01597	-.01663
.247	801.520	-.14149	.09244	-.01343	-.00026	.00052	.00317	.56506	-.01454	-.01432	-.01495
	GRADIENT	.00000	.00000	.00000	.00000	.00000	.00000	.00000	.00000	.00000	.00000

RUN NO. 502/ 0 GRADIENT INTERVAL = -5.00/ 5.00

DLT-X	DLT-Z	CN	CA	CLM	CY	CYN	CBL	XCP/L	CPB1	CPB2	CPBC
400.510	397.100	-.09515	.08970	-.02208	.00053	.00041	.00383	.42796	-.01752	-.01713	-.01625
400.370	499.440	-.13988	.09101	-.01412	-.00010	.00052	.00317	.55834	-.01745	-.01698	-.01625
400.380	599.940	-.14103	.09233	-.01339	-.00020	.00055	.00317	.56506	-.01798	-.01753	-.01701
400.510	750.240	-.14162	.09256	-.01339	-.00029	.00055	.00317	.56545	-.01983	-.01944	-.01926
400.380	800.200	-.14175	.09260	-.01339	-.00021	.00055	.00317	.56555	-.02080	-.02040	-.02033
	GRADIENT	.00000	.00000	.00000	.00000	.00000	.00000	.00000	.00000	.00000	.00000

AEDC VA422(IA17) ORB AND ET SEPARATING(ORB DATA) (RTR307) (24 JUL 75)

REFERENCE DATA

SREF = 2690.0000 SQ.FT. XMRP = 1089.6000 IN. XO
LREF = 1290.3000 IN. YMRP = .0000 IN. YO
BREF = 1290.3000 IN. ZMRP = 375.0000 IN. ZO
SCALE = .0100

PARAMETRIC DATA

DLT-Y = 60.000 ALPHA = -5.000
BETA = .000 DLTALF = -20.000
DLTBTA = 3.000 MACH = 5.930
AILRON = 15.000 ELEVON = .000
GRID = 11.000

RUN NO. 506/ 0 GRADIENT INTERVAL = -5.00/ 5.00

DLT-X	DLT-Z	CN	CA	CLM	CY	CYN	CBL	XCP/L	CPB1	CPB2	CPBC
.481	804.410	.08740	.08872	-.04416	.00085	-.00036	.00535	1.31530	-.01566	-.01502	-.01365
.487	900.940	-.09800	.08543	-.02479	.00052	.00047	.00323	.40176	-.01594	-.01540	-.01393
.426	1000.400	-.14102	.08971	-.01346	-.00023	.00052	.00315	.56453	-.01626	-.01566	-.01412
	GRADIENT	.00000	.00000	.00000	.00000	.00000	.00000	.00000	.00000	.00000	.00000

ORIGINAL PAGE IS OF POOR QUALITY

AEDC VA422(IA17) ORB AND ET SEPARATING(ORB DATA) (RTR307) (24 JUL 75)

REFERENCE DATA

SREF = 2690.0000 SQ.FT. XMRP = 1089.6000 IN. XO
LREF = 1290.3000 IN. YMRP = .0000 IN. YO
BREF = 1290.3000 IN. ZMRP = 375.0000 IN. ZO
SCALE = .0100

PARAMETRIC DATA

DLT-Y = 60.000 ALPHA = -5.000
BETA = .000 DLTALF = -20.000
DLTBTA = 3.000 MACH = 5.930
AILRON = 15.000 ELEVON = .000
GRID = 11.000

RUN NO. 500/ 0 GRADIENT INTERVAL = -5.00/ 5.00

DLT-X	DLT-Z	CN	CA	CLM	CY	CYN	CBL	XCP/L	CPB1	CPB2	CPBC
400.490	751.000	-.09810	.07986	-.02083	.00029	.00032	.00187	.44785	-.00604	-.00604	-.00447
400.410	800.720	-.12966	.08449	-.01525	.00017	.00045	.00333	.54241	-.00987	-.00978	-.00929
400.470	900.340	-.14026	.08872	-.01359	-.00019	.00052	.00314	.56309	-.01027	-.01008	-.01055
400.410	1000.400	-.14084	.09221	-.01335	-.00031	.00054	.00317	.56518	-.00741	-.00725	-.00769
	GRADIENT	.00000	.00000	.00000	.00000	.00000	.00000	.00000	.00000	.00000	.00000

AEDC VA422(IA17) ORB AND ET SEPARATING(ORB DATA) (RTR308) (24 JUL 75)

REFERENCE DATA

SREF = 2690.0000 SQ.FT. XMRP = 1089.6000 IN. XO
LREF = 1290.3000 IN. YMRP = .0000 IN. YO
BREF = 1290.3000 IN. ZMRP = 375.0000 IN. ZO
SCALE = .0100

PARAMETRIC DATA

DLT-Y = 60.000 ALPHA = -10.000
BETA = .000 DLTALF = .000
DLTBTA = 3.000 MACH = 5.930
AILRON = 15.000 ELEVON = .000
GRID = 10.000

RUN NO. 519/ 0 GRADIENT INTERVAL = -5.00/ 5.00

DLT-X	DLT-Z	CN	CA	CLM	CY	CYN	CBL	XCP/L	CPB1	CPB2	CPBC
.395	31.345	-.09059	.12715	-.00814	.00531	.00253	.00309	.57015	-.02193	-.02101	-.02020
.475	102.640	-.10978	.11074	-.01065	.00139	.00259	.00473	.56301	-.02272	-.02178	-.02096
.528	202.130	-.15703	.10404	-.01699	-.00199	.00136	.00473	.55177	-.02381	-.02279	-.02218
.423	300.610	-.20021	.10274	-.01996	-.00238	.00153	.00394	.56030	-.02434	-.02334	-.02289
.433	400.150	-.21767	.10327	-.01717	-.00255	.00154	.00389	.59110	-.02444	-.02345	-.02315
.500	500.240	-.21870	.10387	-.01695	-.00257	.00155	.00388	.58250	-.02419	-.02323	-.02298
	GRADIENT	.00000	.00000	.00000	.00000	.00000	.00000	.00000	.00000	.00000	.00000

RUN NO. 520/ 0 GRADIENT INTERVAL = -5.00/ 5.00

DLT-X	DLT-Z	CN	CA	CLM	CY	CYN	CBL	XCP/L	CPB1	CPB2	CPBC
400.480	32.624	-.08750	.11183	.00038	.00361	.00269	.00502	.66435	-.02143	-.02018	-.01918
400.460	103.100	-.10707	.10812	-.01336	.00117	.00069	.00567	.53523	-.02270	-.02138	-.02057
400.500	201.570	-.17141	.10328	-.02033	-.00205	.00155	.00401	.54137	-.02334	-.02201	-.02130
400.540	300.600	-.20908	.10234	-.01899	-.00250	.00152	.00395	.56917	-.02366	-.02234	-.02174
400.470	400.380	-.21858	.10356	-.01698	-.00259	.00155	.00387	.58231	-.02348	-.02212	-.02155
400.430	500.200	-.21868	.10388	-.01693	-.00260	.00157	.00388	.58258	-.02310	-.02170	-.02106
	GRADIENT	.00000	.00000	.00000	.00000	.00000	.00000	.00000	.00000	.00000	.00000

AEDC VA422(IA17) ORB AND ET SEPARATING(ORB DATA) (RTR309) (24 JUL 75)

REFERENCE DATA

SREF = 2690.0000 SQ.FT. XMRP = 1089.6000 IN. XO
LREF = 1290.3000 IN. YMRP = .0000 IN. YO
BREF = 1290.3000 IN. ZMRP = 375.0000 IN. ZO
SCALE = .0100

PARAMETRIC DATA

DLT-Y = 60.000 ALPHA = -10.000
BETA = .000 DLTALF = -10.000
DLTBTA = 3.000 MACH = 5.930
AILRON = 15.000 ELEVON = .000
GRID = 10.000

RUN NO. 517/ 0 GRADIENT INTERVAL = -5.00/ 5.00

DLT-X	DLT-Z	CN	CA	CLM	CY	CYN	CBL	XCP/L	CPB1	CPB2	CPBC
.476	403.280	-.01716	.10236	-.04795	-.00127	.00091	.00513	-2.13360	-.02028	-.01931	-.01760
.393	501.760	-.11311	.09559	-.03949	-.00272	.00128	.00414	.31090	-.02265	-.02150	-.01981
.373	600.560	-.20287	.09864	-.02033	-.00198	.00142	.00405	.55980	-.02541	-.02421	-.02331
.460	700.210	-.21761	.10278	-.01717	-.00246	.00152	.00383	.58109	-.02592	-.02479	-.02422
.734	801.300	-.21868	.10393	-.01691	-.00252	.00157	.00388	.58266	-.02587	-.02474	-.02420
	GRADIENT	.00000	.00000	.00000	.00000	.00000	.00000	.00000	.00000	.00000	.00000

RUN NO. 516/ 0 GRADIENT INTERVAL = -5.00/ 5.00

DLT-X	DLT-Z	CN	CA	CLM	CY	CYN	CBL	XCP/L	CPB1	CPB2	CPBC
400.460	397.190	-.16285	.09875	-.02871	-.00174	.00146	.00445	.48373	-.01371	-.01296	-.01073
400.350	499.400	-.21388	.10138	-.01785	-.00227	.00149	.00389	.57654	-.01223	-.01157	-.00969
400.320	600.160	-.21624	.10211	-.01739	-.00238	.00151	.00382	.57958	-.01242	-.01175	-.01040
400.250	700.170	-.21768	.10376	-.01695	-.00252	.00155	.00387	.58215	-.01331	-.01268	-.01184
400.410	800.180	-.21783	.10375	-.01693	-.00254	.00155	.00387	.58228	-.01495	-.01431	-.01385
	GRADIENT	.00000	.00000	.00000	.00000	.00000	.00000	.00000	.00000	.00000	.00000

AEDC VA422(IA17) ORB AND ET SEPARATING(ORB DATA) (RTR310) (24 JUL 75)

REFERENCE DATA

SREF = 2690.0000 SQ.FT. XMRP = 1089.6000 IN. XO
LREF = 1290.3000 IN. YMRP = .0000 IN. YO
BREF = 1290.3000 IN. ZMRP = 375.0000 IN. ZO
SCALE = .0100

PARAMETRIC DATA

DLT-Y = 60.000 ALPHA = .000
BETA = 3.000 DLTALF = .000
DLTBTA = 3.000 MACH = 5.930
AILRON = .000 ELEVON = 15.000
GRID = 14.000

RUN NO. 586/ 0 GRADIENT INTERVAL = -5.00/ 5.00

DLT-X	DLT-Z	CN	CA	CLM	CY	CYN	CBL	XCP/L	CPB1	CPB2	CPBC
.537	18.844	.00388	.08595	-.01710	-.04240	-.00154	-.00448	.00000	-.02615	-.02620	-.02572
.493	99.509	.01656	.09372	-.00763	-.04098	.00027	-.00399	1.12070	-.02600	-.02599	-.02557
.563	200.710	.04227	.08858	-.00700	-.03779	.00019	-.00527	.82551	-.02583	-.02579	-.02541
.589	302.020	.05664	.08787	-.01997	-.03061	-.00165	-.00156	1.01260	-.02565	-.02559	-.02521
.523	401.230	.01309	.08197	-.02287	-.03320	-.00178	.00193	2.40650	-.02546	-.02540	-.02503
.520	500.100	-.03358	.07938	-.01634	-.03435	-.00144	-.00040	.17333	-.02533	-.02527	-.02492
.794	597.200	-.03918	.08034	-.01470	-.03472	-.00139	-.00058	.28489	-.02509	-.02499	-.02464
	GRADIENT	.00000	.00000	.00000	.00000	.00000	.00000	.00000	.00000	.00000	.00000

AEDC VA422(IA17) ORB AND ET SEPARATING(ORB DATA) (RTR311) (24 JUL 75)

REFERENCE DATA

SREF = 2690.0000 SQ.FT. XMRP = 1089.6000 IN. XO
LREF = 1290.3000 IN. YMRP = .0000 IN. YO
BREF = 1290.3000 IN. ZMRP = 375.0000 IN. ZO
SCALE = .0100

PARAMETRIC DATA

DLT-Y = 60.000 ALPHA = .000
BETA = 3.000 DLTALF = -10.000
DLTBTA = 3.000 MACH = 5.930
AILRON = .000 ELEVON = 15.000
GRID = 14.000

RUN NO. 585/ 0 GRADIENT INTERVAL = -5.00/ 5.00

DLT-X	DLT-Z	CN	CA	CLM	CY	CYN	CBL	XCP/L	CPB1	CPB2	CPBC
.457	403.700	.18532	.09136	-.04083	-.03001	-.00134	-.00262	.88033	-.02353	-.02341	-.02297
.527	501.860	.06138	.08400	-.03117	-.03199	-.00199	.00363	1.16790	-.02346	-.02338	-.02298
.513	600.220	-.02206	.07848	-.01891	-.03403	-.00155	.00009	-.19741	-.02321	-.02318	-.02280
.550	750.040	-.03937	.08037	-.01472	-.03461	-.00137	-.00057	.28626	-.02215	-.02213	-.02181
-.064	802.250	-.03938	.08039	-.01474	-.03459	-.00139	-.00058	.28572	-.02136	-.02132	-.02094
	GRADIENT	.00000	.00000	.00000	.00000	.00000	.00000	.00000	.00000	.00000	.00000

AEDC VA422(IA17) ORB AND ET SEPARATING(ORB DATA) (RTR312) (24 JUL 75)

REFERENCE DATA

SREF = 2690.0000 SQ.FT. XMRP = 1089.6000 IN. XO
LREF = 1290.3000 IN. YMRP = .0000 IN. YO
BREF = 1290.3000 IN. ZMRP = 375.0000 IN. ZO
SCALE = .0100

PARAMETRIC DATA

DLT-Y = 60.000 ALPHA = .000
BETA = 3.000 DLTALF = -20.000
DLTBTA = 3.000 MACH = 5.930
AILRON = .000 ELEVON = 15.000
GRID = 14.000

RUN NO. 584/ 0 GRADIENT INTERVAL = -5.00/ 5.00

DLT-X	DLT-Z	CN	CA	CLM	CY	CYN	CBL	XCP/L	CPB1	CPB2	CPBC
.408	802.260	.10182	.07450	-.04546	-.03195	-.00140	.00084	1.10740	-.01861	-.01839	-.01730
.492	900.500	-.01929	.07430	-.02094	-.03415	-.00148	-.00044	-.42578	-.01917	-.01895	-.01799
.487	1000.200	-.03905	.07892	-.01470	-.03460	-.00142	-.00058	.28345	-.01895	-.01869	-.01765
	GRADIENT	.00000	.00000	.00000	.00000	.00000	.00000	.00000	.00000	.00000	.00000

AEDC VA422(IA17) ORB AND ET SEPARATING(ORB DATA) (RTR313) (24 JUL 75)

REFERENCE DATA

SREF = 2690.0000 SQ.FT. XMRP = 1089.6000 IN. XO
LREF = 1290.3000 IN. YMRP = .0000 IN. YO
BREF = 1290.3000 IN. ZMRP = 375.0000 IN. ZO
SCALE = .0100

PARAMETRIC DATA

DLT-Y = 60.000 ALPHA = .000
BETA = .000 DLTALF = .000
DLTBTA = 3.000 MACH = 5.930
AILRON = .000 ELEVON = 15.000
GRID = 13.000

RUN NO. 578/ 0 GRADIENT INTERVAL = -5.00/ 5.00

DLT-X	DLT-Z	CN	CA	CLM	CY	CYN	CBL	XCP/L	CPB1	CPB2	CPBC
.515	18.967	-.00495	.08528	-.01557	-.00292	.00033	-.00179	-2.48320	-.02763	-.02758	-.02690
.424	99.569	.00636	.09223	-.00675	.00104	.00206	-.00170	1.72040	-.02761	-.02757	-.02691
.470	200.460	.03357	.08883	-.00684	.00154	.00092	-.00225	.86317	-.02767	-.02765	-.02705
.587	302.060	.06094	.08792	-.02115	.00266	.00015	-.00107	1.00770	-.02767	-.02763	-.02706
.597	401.030	.01405	.08056	-.02316	.00091	.00027	.00033	2.30800	-.02773	-.02772	-.02714
.633	500.120	-.03171	.07753	-.01663	.00051	.00040	-.00030	.13565	-.02779	-.02780	-.02728
.588	597.340	-.03709	.07883	-.01514	.00044	.00042	-.00033	.25188	-.02760	-.02761	-.02718
	GRADIENT	.00000	.00000	.00000	.00000	.00000	.00000	.00000	.00000	.00000	.00000

RUN NO 577/ 0 GRADIENT INTERVAL = -5.00/ 5.00

DLT-X	DLT-Z	CN	CA	CLM	CY	CYN	CBL	XCP/L	CPB1	CPB2	CPBC
400.460	22.275	.06052	.08625	.00370	.00431	.00199	-.00243	.59880	-.02847	-.02846	-.02748
400.460	101.260	.05072	.08781	-.00712	.00305	.00060	-.00202	.80030	-.02866	-.02873	-.02781
400.440	202.210	.07084	.08693	-.02201	.00464	-.00021	.00056	.97074	-.02878	-.02885	-.02794
400.520	301.270	.01733	.08046	-.02379	.00125	.00020	.00058	2.03320	-.02898	-.02909	-.02817
400.490	400.140	-.03199	.07737	-.01667	.00051	.00039	-.00031	.13895	-.02917	-.02931	-.02843
400.550	500.120	-.03722	.07867	-.01513	.00062	.00043	-.00033	.25355	-.02917	-.02930	-.02844
400.620	597.330	-.03727	.07882	-.01514	.00036	.00042	-.00034	.25372	-.02915	-.02930	-.02844
	GRADIENT	.00000	.00000	.00000	.00000	.00000	.00000	.00000	.00000	.00000	.00000

AEDC VA422(IA17) ORB AND ET SEPARATING(ORB DATA) (RTR314) (24 JUL 75)

REFERENCE DATA

SREF = 2690.0000 SQ.FT. XMRP = 1089.6000 IN. XO
LREF = 1290.3000 IN. YMRP = .0000 IN. YO
BREF = 1290.3000 IN. ZMRP = 375.0000 IN. ZO
SCALE = .0100

PARAMETRIC DATA

DLT-Y = 60.000 ALPHA = .000
BETA = .000 DLTALF = -10.000
DLTBTA = 3.000 MACH = 5.930
AILRON = .000 ELEVON = 15.000
GRID = 13.000

RUN NO. 574/ 0 GRADIENT INTERVAL = -5.00/ 5.00

DLT-X	DLT-Z	CN	CA	CLM	CY	CYN	CBL	XCP/L	CPB1	CPB2	CPBC
.468	403.640	.18920	.09219	-.04164	.00224	.00054	-.00193	.88010	-.02303	-.02282	-.02252
.465	501.810	.06266	.08284	-.03112	.00145	.00017	.00106	1.15670	-.02288	-.02271	-.02250
.470	600.230	-.01934	.07664	-.01931	.00057	.00037	-.00020	-.33801	-.02261	-.02248	-.02233
.491	749.950	-.03661	.07872	-.01514	.00052	.00042	-.00033	.24643	-.02144	-.02126	-.02125
-.149	802.520	-.03665	.07875	-.01515	.00034	.00040	-.00033	.24658	-.02055	-.02033	-.02031
	GRADIENT	.00000	.00000	.00000	.00000	.00000	.00000	.00000	.00000	.00000	.00000

RUN NO. 575/ 0 GRADIENT INTERVAL = -5.00/ 5.00

DLT-X	DLT-Z	CN	CA	CLM	CY	CYN	CBL	XCP/L	CPB1	CPB2	CPBC
400.380	396.780	.05932	.08148	-.03151	.00148	.00008	.00121	1.19120	-.02181	-.02150	-.02056
400.330	498.280	-.02249	.07669	-.01875	.00063	.00035	-.00018	-.17366	-.02131	-.02096	-.02009
400.370	600.200	-.03659	.07761	-.01513	.00047	.00039	-.00033	.24660	-.02151	-.02113	-.02038
400.550	750.300	-.03684	.07887	-.01517	.00039	.00041	-.00033	.24821	-.02237	-.02203	-.02152
400.460	800.170	-.03698	.07887	-.01518	.00040	.00041	-.00033	.24935	-.02301	-.02271	-.02230
	GRADIENT	.00000	.00000	.00000	.00000	.00000	.00000	.00000	.00000	.00000	.00000

AEDC VA422(IA17) ORB AND ET SEPARATING(ORB DATA) (RTR316) (24 JUL 75)

REFERENCE DATA

SREF = 2690.0000 SQ.FT. XMRP = 1089.6000 IN. XO
LREF = 1290.3000 IN. YMRP = .0000 IN. YO
BREF = 1290.3000 IN. ZMRP = 375.0000 IN. ZO
SCALE = .0100

PARAMETRIC DATA

DLT-Y = 60.000 ALPHA = .000
BETA = .000 DLTALF = -20.000
DLTBTA = 3.000 MACH = 5.930
AILRON = .000 ELEVON = 15.000
GRID = 13.000

RUN NO. 579/ 0 GRADIENT INTERVAL = -5.00/ 5.00

DLT-X	DLT-Z	CN	CA	CLM	CY	CYN	CBL	XCP/L	CPB1	CPB2	CPBC
.457	802.450	.10137	.07371	-.04366	.00089	.00037	-.00065	1.09070	-.01710	-.01643	-.01544
.528	900.620	-.02016	.07291	-.02024	.00038	.00037	-.00030	-.34399	-.01736	-.01671	-.01573
.485	1000.300	-.03672	.07650	-.01514	.00043	.00042	-.00033	.24765	-.01738	-.01672	-.01567
	GRADIENT	.00000	.00000	.00000	.00000	.00000	.00000	.00000	.00000	.00000	.00000

AEDC VA422(IA17) ORB AND ET SEPARATING(ORB DATA) (RTR316) (24 JUL 75)

REFERENCE DATA

SREF = 2690.0000 SQ.FT. XMRP = 1089.6000 IN. XO
LREF = 1290.3000 IN. YMRP = .0000 IN. YO
BREF = 1290.3000 IN. ZMRP = 375.0000 IN. ZO
SCALE = .0100

PARAMETRIC DATA

DLT-Y = 60.000 ALPHA = .000
BETA = .000 DLTALF = -20.000
DLTBTA = 3.000 MACH = 5.930
AILRON = .000 ELEVON = 15.000
GRID = 13.000

RUN NO. 573/ 0 GRADIENT INTERVAL = -5.00/ 5.00

DLT-X	DLT-Z	CN	CA	CLM	CY	CYN	CBL	XCP/L	CPB1	CPB2	CPBC
400.390	750.340	-.03659	.07394	-.01521	.00043	.00039	-.00033	.24438	-.01889	-.01856	-.01748
400.420	800.270	-.03687	.07513	-.01513	.00037	.00041	-.00033	.24971	-.02008	-.01980	-.01916
400.490	900.480	-.03648	.07681	-.01513	.00027	.00040	-.00033	.24538	-.01983	-.01959	-.01917
400.440	1000.200	-.03650	.07868	-.01516	.00049	.00040	-.00033	.24446	-.01858	-.01831	-.01778
	GRADIENT	.00000	.00000	.00000	.00000	.00000	.00000	.00000	.00000	.00000	.00000

AEDC VA422(IA17) ORB AND ET SEPARATING(ORB DATA) (RTR317) (24 JUL 75)

REFERENCE DATA

SREF = 2690.0000 SQ.FT. XMRP = 1089.6000 IN. XO
LREF = 1290.3000 IN. YMRP = .0000 IN. YO
BREF = 1290.3000 IN. ZMRP = 375.0000 IN. ZO
SCALE = .0100

PARAMETRIC DATA

DLT-Y = 60.000 ALPHA = 5.000
BETA = .000 DLTALF = .000
DLTBTA = 3.000 MACH = 5.930
AILRON = .000 ELEVON = 15.000
GRID = 12.000

RUN NO. 563/ 0 GRADIENT INTERVAL = -5.00/ 5.00

DLT-X	DLT-Z	CN	CA	CLM	CY	CYN	CBL	XCP/L	CPB1	CPB2	CPBC
.522	19.396	.05348	.06715	-.01753	-.00489	-.00039	-.00235	.98781	-.02838	-.02799	-.02772
.528	98.260	.05536	.07932	-.00925	-.00252	.00079	-.00180	.82716	-.02823	-.02779	-.02751
.629	199.100	.08372	.07791	.00320	-.00053	.00128	-.00233	.62172	-.02800	-.02754	-.02726
.635	300.030	.13684	.08170	-.00722	-.00021	.00094	-.00251	.71274	-.02779	-.02733	-.02704
.609	402.100	.18149	.08333	-.02405	.00214	.00011	-.00144	.79249	-.02766	-.02719	-.02689
.542	501.290	.13151	.07675	-.02634	.00091	.00025	.00015	.86030	-.02772	-.02725	-.02691
.655	598.620	.06945	.07180	-.01560	.00052	.00024	-.00043	.88463	-.02784	-.02739	-.02709
	GRADIENT	.00000	.00000	.00000	.00000	.00000	.00000	.00000	.00000	.00000	.00000

RUN NO. 564/ 0 GRADIENT INTERVAL = -5.00/ 5.00

DLT-X	DLT-Z	CN	CA	CLM	CY	CYN	CBL	XCP/L	CPB1	CPB2	CPBC
400.440	19.915	.10598	.07748	.00825	-.00035	.00236	-.00310	.58219	-.02955	-.02929	-.02896
400.450	98.715	.11090	.07815	.00107	-.00078	.00136	-.00331	.65032	-.02953	-.02936	-.02890
400.410	200.100	.16761	.08414	-.01321	.00153	.00055	-.00334	.73881	-.02937	-.02920	-.02867
400.540	299.080	.17622	.07927	-.02741	.00133	.00043	.00056	.81556	-.02936	-.02915	-.02864
400.470	398.090	.10850	.07445	-.02279	.00108	.00001	.00047	.87006	-.02936	-.02915	-.02865
400.450	499.230	.06439	.07188	-.01437	.00082	.00028	-.00047	.88320	-.02933	-.02909	-.02857
400.670	599.880	.08238	.07312	-.01363	.00045	.00029	-.00046	.87853	-.02917	-.02888	-.02829
	GRADIENT	.00000	.00000	.00000	.00000	.00000	.00000	.00000	.00000	.00000	.00000

ORIGINAL PAGE IS OF POOR QUALITY

AEDC VA422(IA17) ORB AND ET SEPARATING(ORB DATA) (RTR318) (24 JUL 75)

REFERENCE DATA

SREF = 2690.0000 SQ.FT. XMRP = 1009.6000 IN. XO
LREF = 1290.3000 IN. YMRP = .0000 IN. YO
BREF = 1290.3000 IN. ZMRP = 375.0000 IN. ZO
SCALE = .0100

PARAMETRIC DATA

DLT-Y = 60.000 ALPHA = 5.000
BETA = .000 DLTALF = -10.000
DLTBTA = 3.000 MACH = 5.930
AILRON = .000 ELEVON = 15.000
GRID = 12.000

RUN NO. 561/ 0 GRADIENT INTERVAL = -5.00/ 5.00

DLT-X	DLT-Z	CN	CA	CLM	CY	CYN	CBL	XCP/L	CPB1	CPB2	CPBC
.472	401.060	.22091	.08357	-.01655	-.00005	.00131	-.00339	.73493	-.02540	-.02506	-.02443
.450	502.700	.23374	.08711	-.03055	.00403	-.00018	-.00189	.79069	-.02509	-.02474	-.02404
.474	601.870	.16273	.07852	-.03214	.00148	.00011	.00116	.85751	-.02485	-.02453	-.02373
.574	750.020	.06481	.07140	-.01436	.00041	.00027	-.00048	.88163	-.02459	-.02428	-.02346
-.557	803.280	.05321	.07272	-.01369	.00036	.00029	-.00047	.87653	-.02429	-.02398	-.02303
	GRADIENT	.00000	.00000	.00000	.00000	.00000	.00000	.00000	.00000	.00000	.00000

RUN NO. 562/ 0 GRADIENT INTERVAL = -5.00/ 5.00

DLT-X	DLT-Z	CN	CA	CLM	CY	CYN	CBL	XCP/L	CPB1	CPB2	CPBC
400.450	398.260	.22270	.08111	-.03519	.00196	.00032	.00184	.81803	-.02502	-.02462	-.02377
400.570	497.690	.13016	.07547	-.02726	.00162	-.00025	.00149	.86942	-.02492	-.02455	-.02376
400.450	599.040	.06695	.07109	-.01509	.00051	.00027	-.00047	.88532	-.02507	-.02469	-.02395
400.610	750.080	.06311	.07326	-.01359	.00048	.00029	-.00047	.87688	-.02520	-.02481	-.02412
400.510	800.050	.06280	.07325	-.01370	.00042	.00028	-.00047	.87819	-.02556	-.02518	-.02463
	GRADIENT	.00000	.00000	.00000	.00000	.00000	.00000	.00000	.00000	.00000	.00000

AEDC VA422(IA17) ORB AND ET SEPARATING(ORB DATA) (RTR320) (24 JUL 75)

REFERENCE DATA

SREF = 2690.0000 SQ.FT. XMRP = 1089.8000 IN. XO
LREF = 1290.3000 IN. YMRP = .0000 IN. YO
BREF = 1290.3000 IN. ZMRP = 375.0000 IN. ZO
SCALE = .0100

PARAMETRIC DATA

DLT-Y = 60.000 ALPHA = 5.000
BETA = .000 DLTALF = -20.000
DLTBTA = 3.000 MACH = 5.930
AILRON = .000 ELEVON = 15.000
GRID = 12.000

RUN NO. 566/ 0 GRADIENT INTERVAL = -5.00/ 5.00

DLT-X	DLT-Z	CN	CA	CLM	CY	CYN	CBL	XCP/L	CPB1	CPB2	CPBC
.446	801.690	.20188	.07149	-.04878	.00155	-.00017	.00002	.90163	-.02260	-.02200	-.02068
.406	900.220	.07118	.06937	-.01613	.00047	.00029	-.00043	.88657	-.02308	-.02243	-.02115
.448	1000.100	.06300	.07124	-.01357	.00054	.00030	-.00046	.87531	-.02339	-.02268	-.02136
	GRADIENT	.00000	.00000	.00000	.00000	.00000	.00000	.00000	.00000	.00000	.00000

AEDC VA422(IA17) ORB AND ET SEPARATING(ORB DATA) (RTR320) (24 JUL 75)

REFERENCE DATA

SREF = 2690.0000 SQ.FT. XMRP = 1089.6000 IN. XO
LREF = 1290.3000 IN. YMRP = .0000 IN. YO
BREF = 1290.3000 IN. ZMRP = 375.0000 IN. ZO
SCALE = .0100

PARAMETRIC DATA

DLT-Y = 80.000 ALPHA = 5.000
BETA = .000 DLTALF = -20.000
DLTBTA = 3.000 MACH = 5.930
AILRON = .000 ELEVON = 15.000
GRID = 12.000

RUN NO. 560/ 0 GRADIENT INTERVAL = -5.00/ 5.00

DLT-X	DLT-Z	CN	CA	CLM	CY	CYN	CBL	XCP/L	CPB1	CPB2	CPBC
400.420	750.210	.06762	.07083	-.01501	.00051	.00027	-.00048	.88191	-.02727	-.02687	-.02640
400.520	900.130	.06325	.07165	-.01363	.00032	.00026	-.00047	.87556	-.02730	-.02690	-.02652
400.470	900.220	.06355	.07293	-.01367	.00035	.00029	-.00047	.87510	-.02692	-.02653	-.02611
400.530	1000.300	.06347	.07300	-.01370	.00033	.00026	-.00047	.87588	-.02660	-.02619	-.02568
	GRADIENT	.00000	.00000	.00000	.00000	.00000	.00000	.00000	.00000	.00000	.00000

AEDC VA422(IA17) ORB AND ET SEPARATING(ORB DATA) (RTR321) (24 JUL 75)

REFERENCE DATA

SREF = 2690.0000 SQ.FT. XMRP = 1089.6000 IN. XO
LREF = 1290.3000 IN. YMRP = .0000 IN. YO
BREF = 1290.3000 IN. ZMRP = 375.0000 IN. ZO
SCALE = .0100

PARAMETRIC DATA

DLT-Y = 60.000 ALPHA = -5.000
BETA = .000 DLTALF = .000
DLTBTA = 3.000 MACH = 5.930
AILRON = .000 ELEVON = 15.000
GRID = 11.000

RUN NO. 550/ 0 GRADIENT INTERVAL = -5.00/ 5.00

DLT-X	DLT-Z	CN	CA	CLM	CY	CYN	CBL	XCP/L	CPB1	CPB2	CPBC
.455	19.650	-.04826	.10545	-.01348	.00213	.00077	-.00144	.38062	-.02577	-.02549	-.02500
.504	101.320	-.03432	.10104	-.00973	.00686	.00127	-.00125	.37646	-.02600	-.02574	-.02525
.414	201.800	-.04223	.09977	-.01656	.00288	.00020	-.00077	.26775	-.02641	-.02616	-.02591
.531	301.280	-.07783	.09228	-.02175	.00166	.00002	.00038	.38060	-.02636	-.02612	-.02588
.528	400.220	-.11891	.08992	-.01912	.00137	.00009	-.00007	.49924	-.02631	-.02607	-.02585
.537	500.320	-.12846	.09052	-.01708	.00128	.00011	-.00012	.52702	-.02620	-.02595	-.02579
.577	600.230	-.12829	.09076	-.01708	.00132	.00011	-.00012	.52686	-.02602	-.02576	-.02562
	GRADIENT	.00000	.00000	.00000	.00000	.00000	.00000	.00000	.00000	.00000	.00000

RUN NO. 551/ 0 GRADIENT INTERVAL = -5.00/ 5.00

DLT-X	DLT-Z	CN	CA	CLM	CY	CYN	CBL	XCP/L	CPB1	CPB2	CPBC
400.430	22.992	-.00036	.09806	-.00023	.00504	.00195	.00001	.00000	-.02735	-.02706	-.02634
400.500	102.450	-.01996	.09951	-.01428	.00507	.00024	-.00107	-.05567	-.02766	-.02738	-.02676
400.360	201.850	-.05738	.09377	-.02215	.00218	-.00001	.00085	.27405	-.02778	-.02752	-.02688
400.410	300.490	-.10648	.09016	-.02106	.00158	.00007	.00001	.46219	-.02794	-.02768	-.02704
400.490	400.040	-.12812	.09036	-.01713	.00143	.00009	-.00012	.52632	-.02812	-.02787	-.02726
400.420	500.190	-.12828	.09092	-.01711	.00136	.00010	-.00012	.52659	-.02811	-.02784	-.02724
400.370	600.190	-.12840	.09091	-.01711	.00140	.00010	-.00012	.52674	-.02805	-.02779	-.02718
	GRADIENT	.00000	.00000	.00000	.00000	.00000	.00000	.00000	.00000	.00000	.00000

DATE 25 JUL 75 TABULATED SOURCE DATA - IA17A

AEDC VA422(IA17) ORB AND ET SEPARATING(ORB DATA) (RTR322) (24 JUL 75)

REFERENCE DATA

SREF = 2690.0000 SQ.FT. XMRP = 1089.6000 IN. XO
LREF = 1290.3000 IN. YMRP = .0000 IN. YO
BREF = 1290.3000 IN. ZMRP = 375.0000 IN. ZO
SCALE = .0100

PARAMETRIC DATA

DLT-Y = 60.000 ALPHA = -5.000
BETA = .000 DLTALF = -10.000
DLTBTA = 3.000 MACH = 5.930
AILRON = .000 ELEVON = 15.000
GRID = 11.000

RUN NO. 548/ 0 GRADIENT INTERVAL = -5.00/ 5.00

DLT-X	DLT-Z	CN	CA	CLM	CY	CYN	CBL	XCP/L	CPB1	CPB2	CPBC
.494	404.000	.09289	.09633	-.05278	.00190	.00014	-.00047	1.22810	-.01846	-.01804	-.01831
.371	501.140	-.07488	.08587	-.02940	.00156	.00002	.00004	.26729	-.01844	-.01803	-.01858
.510	600.270	-.12733	.08905	-.01731	.00122	.00011	-.00011	.52408	-.01788	-.01743	-.01825
.454	750.170	-.12791	.09061	-.01709	.00105	.00011	-.00012	.52641	-.01533	-.01479	-.01581
.184	801.570	-.12776	.09060	-.01705	.00103	.00011	-.00012	.52651	-.01347	-.01287	-.01391
	GRADIENT	.00000	.00000	.00000	.00000	.00000	.00000	.00000	.00000	.00000	.00000

RUN NO. 549/ 0 GRADIENT INTERVAL = -5.00/ 5.00

DLT-X	DLT-Z	CN	CA	CLM	CY	CYN	CBL	XCP/L	CPB1	CPB2	CPBC
400.400	397.000	-.07570	.08887	-.02682	.00183	.00006	.00001	.30568	-.01800	-.01752	-.01680
400.420	499.300	-.12480	.08899	-.01795	.00129	.00011	-.00010	.51617	-.01791	-.01737	-.01677
400.460	599.950	-.12745	.09040	-.01708	.00115	.00010	-.00011	.52598	-.01840	-.01790	-.01748
400.450	750.220	-.12784	.09066	-.01708	.00123	.00011	-.00012	.52638	-.02021	-.01980	-.01969
400.320	800.160	-.12782	.09070	-.01708	.00110	.00008	-.00012	.52634	-.02108	-.02069	-.02065
	GRADIENT	.00000	.00000	.00000	.00000	.00000	.00000	.00000	.00000	.00000	.00000

AEDC VA422(IA17) ORB AND ET SEPARATING(ORB DATA) (RTR324) (24 JUL 75)

REFERENCE DATA

SREF = 2690.0000 SQ.FT. XMRP = 1089.6000 IN. XO
LREF = 1290.3000 IN. YMRP = .0000 IN. YO
BREF = 1290.3000 IN. ZMRP = 375.0000 IN. ZO
SCALE = .0100

PARAMETRIC DATA

DLT-Y = 60.000 ALPHA = -5.000
BETA = .000 DLTALF = -20.000
DLTBTA = 3.000 MACH = 5.930
AILRON = .000 ELEVON = 15.000
GRID = 11.000

RUN NO. 553/ 0 GRADIENT INTERVAL = -5.00/ 5.00

DLT-X	DLT-Z	CN	CA	CLM	CY	CYN	CBL	XCP/L	CPB1	CPB2	CPBC
.434	804.190	.09602	.09127	-.05181	.00301	-.00029	.00019	1.19960	-.01405	-.01344	-.01235
.357	901.270	-.07310	.08411	-.02854	.00136	.00001	-.00049	.26964	-.01406	-.01350	-.01239
.492	1000.300	-.12727	.08769	-.01715	.00127	.00010	-.00012	.52522	-.01424	-.01367	-.01256
	GRADIENT	.00000	.00000	.00000	.00000	.00000	.00000	.00000	.00000	.00000	.00000

AEDC VA422(IA17) ORB AND ET SEPARATING(ORB DATA) (RTR324) (24 JUL 75)

REFERENCE DATA

SREF = 2690.0000 SQ.FT. XMRP = 1089.6000 IN. XO
LREF = 1290.3000 IN. YMRP = .0000 IN. YO
BREF = 1290.3000 IN. ZMRP = 375.0000 IN. ZO
SCALE = .0100

PARAMETRIC DATA

DLT-Y = 60.000 ALPHA = -5.000
BETA = .000 DLTALF = -20.000
DLTBTA = 3.000 MACH = 5.930
AILRON = .000 ELEVON = 15.000
GRID = 11.000

RUN NO. 547/ 0 GRADIENT INTERVAL = -5.00/ 5.00

DLT-X	DLT-Z	CN	CA	CLM	CY	CYN	CBL	XCP/L	CPB1	CPB2	CPBC
400.400	751.770	-.05520	.07416	-.02683	[illegible]0065	.00009	.00026	.17391	-.00609	-.00497	-.00305
400.340	800.640	-.11678	.08222	-.01863	.00058	.00014	-.00046	.50048	-.0[illegible]5	-.00985	-.00894
400.430	900.350	-.12663	.08642	-.01729	.00117	.00010	-.00012	.52342	[illegible]	-.01089	-.01091
400.280	1000.400	-.12715	.09029	-.01[illegible]	[illegible]012	.00010	-.00012	.52619	-.00898	-.00832	-.00824
	GRADIENT	.00000	.00000	.00000	.00000	.00000	.00000	.00000	.00000	.00000	.00000

AEDC VA422(IA17) ORB AND ET SEPARATING(ORB DATA) (RTR325) (24 JUL 75)

REFERENCE DATA

SREF = 2690.0000 SQ.FT. XMRP = 1089.6000 IN. XO
LREF = 1290.3000 IN. YMRP = .0000 IN. YO
BREF = 1290.3000 IN. ZMRP = 375.0000 IN. ZO
SCALE = .0100

PARAMETRIC DATA

DLT-Y = 60.000 ALPHA = -10.000
BETA = .000 DLTALF = .000
DLTBTA = 3.000 MACH = 5.930
AILRON = .000 ELEVON = 15.000
GRID = 10.000

RUN NO. 539/ 0 GRADIENT INTERVAL = -5.00/ 5.00

DLT-X	DLT-Z	CN	CA	CLM	CY	CYN	CBL	XCP/L	CPB1	CPB2	CPBC
.504	31.482	-.07156	.12811	-.01299	.00936	.00170	-.00115	.47856	-.02161	-.02109	-.02035
.471	102.550	-.09008	.10972	-.01633	.00500	.00165	-.00009	.47873	-.02207	-.02161	-.02085
.495	202.180	-.13877	.10255	-.02223	.00168	.00031	.00017	.49979	-.02292	-.02247	-.02183
.425	300.500	-.18332	.10079	-.02441	.00125	.00035	-.00031	.52684	-.02324	-.02282	-.02228
.384	400.150	-.20082	.10099	-.02145	.00117	.00033	-.00027	.55319	-.02327	-.02286	-.02242
.463	500.290	-.20150	.10165	-.02128	.00118	.00034	-.00031	.55441	-.02295	-.02255	-.02218
	GRADIENT	.00000	.00000	.00000	.00000	.00000	.00000	.00000	.00000	.00000	.00000

RUN NO. 540/ 0 GRADIENT INTERVAL = -5.00/ 5.00

DLT-X	DLT-Z	CN	CA	CLM	CY	CYN	CBL	XCP/L	CPB1	CPB2	CPBC
400.450	32.573	-.06814	.11069	-.00552	.00681	.00174	.00017	.57898	-.02108	-.02045	-.01953
400.450	103.100	-.08756	.10726	-.01924	.00485	-.00022	.00089	.44032	-.02209	-.02147	-.02073
400.510	201.450	-.15312	.10183	-.02536	.00139	.00048	-.00045	.49440	-.02264	-.02202	-.02130
400.510	300.540	-.19245	.10034	-.02321	.00119	.00032	-.00024	.53940	-.02280	-.02220	-.02155
400.440	400.340	-.20163	.10126	-.02133	.00117	.00035	-.00030	.55422	-.02260	-.02195	-.02132
400.390	500.230	-.20171	.10162	-.02125	.00108	.00035	-.00031	.55463	-.02222	-.02152	-.02088
	GRADIENT	.00000	.00000	.00000	.00000	.00000	.00000	.00000	.00000	.00000	.00000

ORIGINAL PAGE IS
OF POOR QUALITY

AEDC VA422(IA17) ORB AND ET SEPARATING(ORB DATA) (RTR326) (24 JUL 75)

REFERENCE DATA

SREF = 2690.0000 SQ.FT. XMRP = 1089.6000 IN. XO
LREF = 1290.3000 IN. YMRP = .0000 IN. YO
BREF = 1290.3000 IN. ZMRP = 375.0000 IN. ZO
SCALE = .0100

PARAMETRIC DATA

DLT-Y = 60.000 ALPHA = -10.000
BETA = .000 DLTALF = -10.000
DLTBTA = 3.000 MACH = 5.930
AILRON = .000 ELEVON = 15.000
GRID = 10.000

RUN NO. 537/ 0 GRADIENT INTERVAL = -5.00/ 5.00

DLT-X	DLT-Z	CN	CA	CLM	CY	CYN	CBL	XCP/L	CPB1	CPB2	CPBC
.451	403.210	.01023	.10429	-.05611	.00216	.00045	-.00081	6.14630	-.01756	-.01692	-.01585
.298	501.850	-.09257	.09472	-.04464	.00126	-.00000	-.00088	.17775	-.01885	-.01822	-.01715
.420	600.610	-.18536	.09704	-.02467	.00110	.00035	-.00016	.52693	-.02085	-.02012	-.01966
.431	700.170	-.20054	.10034	-.02141	.00123	.00033	-.00030	.55325	-.02095	-.02022	-.02000
.699	801.570	-.20158	.10165	-.02124	.00110	.00034	-.00031	.55461	-.02279	-.02230	-.02190
	GRADIENT	.00000	.00000	.00000	.00000	.00000	.00000	.00000	.00000	.00000	.00000

RUN NO. 538/ 0 GRADIENT INTERVAL = -5.00/ 5.00

DLT-X	DLT-Z	CN	CA	CLM	CY	CYN	CBL	XCP/L	CPB1	CPB2	CPBC
400.480	397.230	-.14421	.09738	-.03376	.00187	.00036	-.00024	.42586	-.01313	-.01254	-.01082
400.340	499.400	-.19717	.09904	-.02204	.00111	.00032	-.00027	.54821	-.01200	-.01140	-.00994
400.390	600.140	-.19958	.09985	-.02161	.00117	.00034	-.00029	.55172	-.01205	-.01144	-.01038
400.340	700.200	-.20088	.10132	-.02125	.00111	.00033	-.00030	.55422	-.01291	-.01232	-.01170
400.390	800.140	-.20123	.10147	-.02125	.00122	.00033	-.00030	.55439	-.01444	-.01391	-.01358
	GRADIENT	.00000	.00000	.00000	.00000	.00000	.00000	.00000	.00000	.00000	.00000

AEDC VA422(IA17) ORB AND ET SEPARATING(ORB DATA) (RTR327) (24 JUL 75)

REFERENCE DATA

SREF = 2690.0000 SQ.FT. XMRP = 1089.6000 IN. XO
LREF = 1290.3000 IN. YMRP = .0000 IN. YO
BREF = 1290.3000 IN. ZMRP = 375.0000 IN. ZO
SCALE = .0100

PARAMETRIC DATA

DLT-Y = 60.000 ALPHA = 10.000
BETA = .000 DLTALF = -10.000
DLTBTA = .000 MACH = 5.930
AILRON = .000 ELEVON = .000
GRID = 23.000

RUN NO. 650/ 0 GRADIENT INTERVAL = -5.00/ 5.00

DLT-X	DLT-Z	CN	CA	CLM	CY	CYN	CBL	XCP/L	CPB1	CPB2	CPBC
.521	399.490	.23095	.06639	.00858	.00109	.00096	-.00145	.62285	-.02805	-.02742	-.02698
.610	500.580	.26577	.07193	.00026	.00065	.00092	-.00323	.65901	-.02827	-.02766	-.02727
.611	599.770	.29949	.06909	-.01585	.00551	-.00084	-.00074	.71292	-.02850	-.02791	-.02760
.552	697.940	.25569	.06102	-.02070	.00284	-.00044	.00478	.74098	-.02877	-.02819	-.02788
.612	798.170	.17719	.05958	-.01105	.00138	-.00009	.00048	.72234	-.02889	-.02831	-.02800
	GRADIENT	.00000	.00000	.00000	.00000	.00000	.00000	.00000	.00000	.00000	.00000

AEDC VA422(IA17) ORB AND ET SEPARATING(ORB DATA) (RTR327) (24 JUL 75)

REFERENCE DATA

SREF = 2690.0000 SQ.FT. XMRP = 1089.6000 IN. XO
LREF = 1290.3000 IN. YMRP = .0000 IN. YO
BREF = 1290.3000 IN. ZMRP = 375.0000 IN. ZO
SCALE = .0100

PARAMETRIC DATA

DLT-Y = 60.000 ALPHA = 10.000
BETA = .000 DLTALF = -10.000
DLTBTA = .000 MACH = 5.930
AILRON = .000 ELEVON = .000
GRID = 23.000

RUN NO. 649/ 0 GRADIENT INTERVAL = -5.00/ 5.00

DLT-X	DLT-Z	CN	CA	CLM	CY	CYN	CBL	XCP/L	CPB1	CPB2	CPBC
200.500	400.100	.26638	.07151	.00213	.00024	.00117	-.00407	.65199	-.02783	-.02715	-.02669
200.590	502.010	.30630	.06973	-.01508	.00598	-.00096	-.00053	.70924	-.02764	-.02692	-.02640
200.510	602.010	.26688	.06136	-.02176	.00339	-.00055	.00578	.74155	-.02761	-.02687	-.02626
200.460	700.480	.18526	.05899	-.01246	.00147	-.00009	.00083	.72727	-.02771	-.02695	-.02631
200.570	800.090	.15390	.06069	-.00484	.00086	.00001	-.00005	.69144	-.02787	-.02717	-.02660
	GRADIENT	.00000	.00000	.00000	.00000	.00000	.00000	.00000	.00000	.00000	.00000

RUN NO. 648/ 0 GRADIENT INTERVAL = -5.00/ 5.00

DLT-X	DLT-Z	CN	CA	CLM	CY	CYN	CBL	XCP/L	CPB1	CPB2	CPBC
400.470	399.640	.31187	.07065	-.01354	.00628	-.00099	-.00060	.70342	-.02809	-.02734	-.02685
400.540	498.250	.27959	.06215	-.02251	.00373	-.00059	.00651	.74052	-.02821	-.02750	-.02705
400.480	597.780	.19441	.05907	-.01392	.00182	-.00014	.00129	.73159	-.02834	-.02764	-.02723
400.430	699.370	.15538	.05997	-.00535	.00079	.00001	-.00003	.69446	-.02839	-.02771	-.02727
400.530	800.030	.15407	.06187	-.00477	.00077	.00003	-.00003	.69094	-.02809	-.02738	-.02677
	GRADIENT	.00000	.00000	.00000	.00000	.00000	.00000	.00000	.00000	.00000	.00000

AEDC VA422(IA17) ORB AND ET SEPARATING(ORB DATA) (RTR328) (24 JUL 75)

REFERENCE DATA

SREF = 2690.0000 SQ.FT. XMRP = 1089.6000 IN. XO
LREF = 1290.3000 IN. YMRP = .0000 IN. YO
BREF = 1290.3000 IN. ZMRP = 375.0000 IN. ZO
SCALE = .0100

PARAMETRIC DATA

DLT-Y = 60.000 ALPHA = 10.000
BETA = .000 DLTALF = -20.000
DLTBTA = .000 MACH = 5.930
AILRON = .000 ELEVON = .000
GRID = 23.000

RUN NO. 559/ 0 GRADIENT INTERVAL = -5.00/ 5.00

DLT-X	DLT-Z	CN	CA	CLM	CY	CYN	CBL	XCP/L	CPB1	CPB2	CPBC
.472	803.420	.37175	.06015	-.03981	.00657	-.00114	.00873	.76710	-.02663	-.02583	-.02535
.548	897.000	.22869	.05720	-.02047	.00240	-.00026	.00289	.74949	-.02645	-.02561	-.02511
.599	999.000	.16195	.05946	-.00754	.00099	-.00003	.00001	.70654	-.02628	-.02540	-.02489
	GRADIENT	.00000	.00000	.00000	.00000	.00000	.00000	.00000	.00000	.00000	.00000

AEDC VA422(IA17) ORB AND ET SEPARATING(ORB DATA) (RTR328) (24 JUL 75)

REFERENCE DATA

SREF = 2690.0000 SQ.FT. XMRP = 1089.6000 IN. XO
LREF = 1290.3000 IN. YMRP = .0000 IN. YO
BREF = 1290.3000 IN. ZMRP = 375.0000 IN. ZO
SCALE = .0100

PARAMETRIC DATA

DLT-Y = 60.000 ALPHA = 10.000
BETA = .000 DLTALF = -20.000
DLTBTA = .000 MACH = 5.930
AILRON = .000 ELEVON = .000
GRID = 23.000

RUN NO. 658/ 0 GRADIENT INTERVAL = -5.00/ 5.00

DLT-X	DLT-Z	CN	CA	CLM	CY	CYN	CBL	XCP/L	CP91	CP82	CPBC
200.490	801.490	.23700	.05709	-.02234	.00276	-.00034	.00328	.75427	-.02691	-.02623	-.02583
200.440	899.960	.16412	.05916	-.00795	.00106	-.00002	.00002	.70845	-.02705	-.02640	-.02612
200.810	1000.000	.15498	.06181	-.00480	.00078	.00002	-.00004	.69100	-.02682	-.02617	-.02590
	GRADIENT	.00000	.00000	.00000	.00000	.00000	.00000	.00000	.00000	.00000	.00000

RUN NO. 657/ 0 GRADIENT INTERVAL = -5.00/ 5.00

DLT-X	DLT-Z	CN	CA	CLM	CY	CYN	CBL	XCP/L	CP81	CP82	CPBC
400.500	800.250	.16621	.05907	-.00876	.00100	-.00002	.00005	.71272	-.02637	-.02566	-.02523
400.600	900.080	.15488	.06149	-.00480	.00080	.00002	-.00004	.69101	-.02616	-.02544	-.02496
400.530	1000.200	.15493	.06192	-.00480	.00082	.00003	-.00004	.69096	-.02616	-.02547	-.02503
	GRADIENT	.00000	.00000	.00000	.00000	.00000	.00000	.00000	.00000	.00000	.00000

AEDC VA422(IA17) ORB AND ET SEPARATING(ORB DATA) (RTR329) (24 JUL 75)

REFERENCE DATA

SREF = 2690.0000 SQ.FT. XMRP = 1089.6000 IN. XO
LREF = 1290.3000 IN. YMRP = .0000 IN. YO
BREF = 1290.3000 IN. ZMRP = 375.0000 IN. ZO
SCALE = .0100

PARAMETRIC DATA

DLT-Y = 60.000 ALPHA = 10.000
BETA = .000 DLTALF = -10.000
DLTBTA = 3.000 MACH = 5.930
AILRON = .000 ELEVON = .000
GRID = 23.000

RUN NO. 668/ 0 GRADIENT INTERVAL = -5.00/ 5.00

DLT-X	DLT-Z	CN	CA	CLM	CY	CYN	CBL	XCP/L	CP81	CP82	CPBC
.581	399.430	.23119	.06817	.00900	-.00108	.00078	-.00232	.62108	-.02632	-.02596	-.02569
.551	500.140	.26772	.07217	.00064	-.00002	.00068	-.00291	.65761	-.02583	-.02546	-.02510
.633	602.430	.31236	.07069	-.01723	.00334	-.00052	-.00164	.71515	-.02541	-.02504	-.02458
.656	701.800	.25341	.06069	-.02086	.00185	-.00017	.00195	.74232	-.02500	-.02463	-.02408
.570	800.010	.17625	.05945	-.01071	.00102	-.00002	.00016	.72079	-.02470	-.02432	-.02371
	GRADIENT	.00000	.00000	.00000	.00000	.00000	.00000	.00000	.00000	.00000	.00000

AEDC VA422(IA17) ORB AND ET SEPARATING(ORB DATA) (RTR329) (24 JUL 75)

REFERENCE DATA

SREF = 2690.0000 SQ.FT. XMRP = 1089.8000 IN. XO
LREF = 1290.3000 IN. YMRP = .0000 IN. YO
BREF = 1290.3000 IN. ZMRP = 375.0000 IN. ZO
SCALE = .0100

PARAMETRIC DATA

DLT-Y = 60.000 ALPHA = 10.000
BETA = .000 DLTALF = -10.000
DLTBTA = 3.000 MACH = 5.930
AILRON = .000 ELEVON = .000
GRID = 23.000

RUN NO. 667/ 0 GRADIENT INTERVAL = -5.00/ 5.00

DLT-X	DLT-Z	CN	CA	CLM	CY	CYN	CBL	XCP/L	CPB1	CPB2	CPBC
200.410	400.640	.26487	.07105	.00307	-.00056	.00089	-.00344	.64842	-.02737	-.02692	-.02675
200.680	500.270	.31679	.07222	-.01522	.00292	-.00041	-.00202	.70806	-.02749	-.02698	-.02679
200.530	597.680	.27017	.06159	-.02230	.00211	-.00024	.00265	.74254	-.02770	-.02719	-.02704
200.540	698.020	.18632	.05919	-.01244	.00112	-.00004	.00043	.72675	-.02789	-.02738	-.02722
200.530	799.440	.15427	.06053	-.00505	.00064	.00002	-.00004	.69275	-.02797	-.02746	-.02726
	GRADIENT	.00000	.00000	.00000	.00000	.00000	.00000	.00000	.00000	.00000	.00000

RUN NO. 668/ 0 GRADIENT INTERVAL = -5.00/ 5.00

DLT-X	DLT-Z	CN	CA	CLM	CY	CYN	CBL	XCP/L	CPB1	CPB2	CPBC
400.540	402.210	.32557	.07188	-.01483	.00407	-.00065	-.00143	.70555	-.02708	-.02640	-.02593
400.510	502.210	.28023	.06195	-.02307	.00229	-.00026	.00313	.74234	-.02694	-.02622	-.02566
400.460	600.760	.19518	.05890	-.01354	.00124	-.00004	.00058	.72935	-.02709	-.02636	-.02573
400.570	700.080	.15595	.05958	-.00556	.00085	.00003	-.00003	.69566	-.02741	-.02673	-.02628
400.610	800.070	.15419	.06172	-.00481	.00070	.00001	-.00004	.69118	-.02746	-.02678	-.02631
	GRADIENT	.00000	.00000	.00000	.00000	.00000	.00000	.00000	.00000	.00000	.00000

AEDC VA422(IA17) ORB AND ET SEPARATING(ORB DATA) (RTR330) (24 JUL 75)

REFERENCE DATA

SREF = 2690.0000 SQ.FT. XMRP = 1089.8000 IN. XO
LREF = 1290.3000 IN. YMRP = .0000 IN. YO
BREF = 1290.3000 IN. ZMRP = 375.0000 IN. ZO
SCALE = .0100

PARAMETRIC DATA

DLT-Y = 60.000 ALPHA = 10.000
BETA = .000 DLTALF = -20.000
DLTBTA = 3.000 MACH = 5.930
AILRON = .000 ELEVON = .000
GRID = 23.000

RUN NO. 660/ 0 GRADIENT INTERVAL = -5.00/ 5.00

DLT-X	DLT-Z	CN	CA	CLM	CY	CYN	CBL	XCP/L	CPB1	CPB2	CPBC
.513	803.640	.38445	.05993	-.04299	.00262	-.00031	.00321	.77182	-.02368	-.02340	-.02262
.437	901.240	.22772	.05697	-.02035	.00149	-.00010	.00106	.74936	-.02356	-.02329	-.02244
.540	999.970	.18312	.05929	-.00762	.00077	-.00000	-.00002	.70671	-.02379	-.02347	-.02258
	GRADIENT	.00000	.00000	.00000	.00000	.00000	.00000	.00000	.00000	.00000	.00000

ORIGINAL PAGE IS OF POOR QUALITY

AEDC VA422(IA17) ORB AND ET SEPARATING(ORB DATA) (RTR330) (24 JUL 75)

REFERENCE DATA

SREF = 2690.0000 SQ.FT. XMRP = 1089.6000 IN. XO
LREF = 1290.3000 IN. YMRP = .0000 IN. YO
BREF = 1290.3000 IN. ZMRP = 375.0000 IN. ZO
SCALE = .0100

PARAMETRIC DATA

DLT-Y = 60.000 ALPHA = 10.000
BETA = .000 DLTALF = -20.000
DLTBTA = 3.000 MACH = 5.930
AILRON = .000 ELEVON = .000
GRID = 23.000

RUN NO. 681/ 0 GRADIENT INTERVAL = -5.00/ 5.00

DLT-X	DLT-Z	CN	CA	CLM	CY	CYN	CBL	XCP/L	CPB1	CPB2	CPBC
200.550	796.950	.23973	.05726	-.02300	.00168	-.00015	.00148	.75593	-.02402	-.02366	-.02293
200.500	898.810	.16592	.05929	-.00870	.00080	.00000	-.00001	.71246	-.02419	-.02378	-.02312
200.620	1000.100	.15482	.06122	-.00477	.00074	.00002	-.00004	.69084	-.02428	-.02383	-.02319
	GRADIENT	.00000	.00000	.00000	.00000	.00000	.00000	.00000	.00000	.00000	.00000

RUN NO. 682/ 0 GRADIENT INTERVAL = -5.00/ 5.00

DLT-X	DLT-Z	CN	CA	CLM	CY	CYN	CBL	XCP/L	CPB1	CPB2	CPBC
400.530	800.200	.16813	.05895	-.00921	.00088	-.00001	.00001	.71480	-.02570	-.02518	-.02478
400.490	899.950	.15475	.06175	-.00477	.00072	.00005	-.00004	.69081	-.02539	-.02489	-.02453
400.470	999.990	.15510	.05790	-.00480	.00074	.00002	-.00004	.69097	-.02493	-.02444	-.02399
	GRADIENT	.00000	.00000	.00000	.00000	.00000	.00000	.00000	.00000	.00000	.00000

AEDC VA422(IA17) ORB AND ET SEPARATING(ORB DATA) (RTR331) (24 JUL 75)

REFERENCE DATA

SREF = 2690.0000 SQ.FT. XMRP = 1089.6000 IN. XO
LREF = 1290.3000 IN. YMRP = .0000 IN. YO
BREF = 1290.3000 IN. ZMRP = 375.0000 IN. ZO
SCALE = .0100

PARAMETRIC DATA

DLT-Y = 60.000 ALPHA = 10.000
BETA = 3.000 DLTALF = -10.000
DLTBTA = .000 MACH = 5.930
AILRON = .000 ELEVON = .000
GRID = 27.000 PO = 94.000

RUN NO. 680/ 0 GRADIENT INTERVAL = -5.00/ 5.00

DLT-X	DLT-Z	CN	CA	CLM	CY	CYN	CBL	XCP/L	CPB1	CPB2	CPBC
.474	399.550	.24227	.06797	.00818	-.03131	-.00134	-.00697	.62623	-.02767	-.02756	-.02702
.585	500.510	.27715	.07230	-.00138	-.03089	-.00085	-.00823	.66499	-.02786	-.02774	-.02727
.630	599.110	.29013	.06794	-.01662	-.02307	-.00284	-.00227	.71729	-.02819	-.02805	-.02765
.583	698.260	.25168	.06134	-.02090	-.02423	-.00289	.00565	.74304	-.02851	-.02836	-.02800
.702	798.240	.17658	.05981	-.01102	-.02677	-.00249	-.00071	.72240	-.02874	-.02860	-.02821
	GRADIENT	.00000	.00000	.00000	.00000	.00000	.00000	.00000	.00000	.00000	.00000

AEDC VA422(IA17) ORB AND ET SEPARATING(ORB DATA) (RTR331) (24 JUL 75)

REFERENCE DATA

SREF = 2690.0000 SQ.FT. XMRP = 1089.6000 IN. XO
LREF = 1290.3000 IN. YMRP = .0000 IN. YO
BREF = 1290.3000 IN. ZMRP = 375.0000 IN. ZO
SCALE = .0100

PARAMETRIC DATA

DLT-Y = 60.000 ALPHA = 10.000
BETA = 3.000 DLTALF = -10.000
DLTBTA = .000 MACH = 5.930
AILRON = .000 ELEVON = .000
GRID = 27.000 PO = 94.000

RUN NO. 679/ 0 GRADIENT INTERVAL = -5.00/ 5.00

DLT-X	DLT-Z	CN	CA	CLM	CY	CYN	CBL	XCP/L	CPB1	CPB2	CPBC
200.540	400.720	.27791	.07186	.00070	-.03088	-.00076	-.00894	.65749	-.02721	-.02714	-.02658
200.670	501.840	.29789	.06863	-.01577	-.02305	-.00279	-.00265	.71295	-.02689	-.02682	-.02621
200.630	601.800	.26303	.06162	-.02212	-.02407	-.00291	.00631	.74411	-.02663	-.02656	-.02583
200.550	700.400	.18511	.05921	-.01256	-.02651	-.00248	-.00013	.72785	-.02681	-.02674	-.02592
200.590	799.960	.15270	.06004	-.00461	-.02760	-.00235	-.00176	.69021	-.02736	-.02727	-.02659
	GRADIENT	.00000	.00000	.00000	.00000	.00000	.00000	.00000	.00000	.00000	.00000

RUN NO. 678/ 0 GRADIENT INTERVAL = -5.00/ 5.00

DLT-X	DLT-Z	CN	CA	CLM	CY	CYN	CBL	XCP/L	CPB1	CPB2	CPBC
400.520	399.380	.30627	.06908	-.01418	-.02311	-.00278	-.00341	.70629	-.02737	-.02727	-.02662
400.550	498.350	.27701	.06219	-.02338	-.02420	-.00282	.00607	.74440	-.02746	-.02740	-.02675
400.490	597.950	.19367	.05923	-.01395	-.02642	-.00245	.00019	.73202	-.02763	-.02759	-.02695
400.610	699.370	.15362	.06009	-.00501	-.02745	-.00237	-.00173	.69261	-.02780	-.02775	-.02714
400.510	800.050	.15347	.06227	-.00486	-.02790	-.00232	-.00173	.69170	-.02746	-.02739	-.02662
	GRADIENT	.00000	.00000	.00000	.00000	.00000	.00000	.00000	.00000	.00000	.00000

AEDC VA422(IA17) ORB AND ET SEPARATING(ORB DATA) (RTR332) (24 JUL 75)

REFERENCE DATA

SREF = 2690.0000 SQ.FT. XMRP = 1089.6000 IN. XO
LREF = 1290.3000 IN. YMRP = .0000 IN. YO
BREF = 1290.3000 IN. ZMRP = 375.0000 IN. ZO
SCALE = .0100

PARAMETRIC DATA

DLT-Y = 60.000 ALPHA = 10.000
BETA = 3.000 DLTALF = -20.000
DLTBTA = .000 MACH = 5.930
AILRON = .000 ELEVON = .000
GRID = 27.000 PO = 94.000

RUN NO. 689/ 0 GRADIENT INTERVAL = -5.00/ 5.00

DLT-X	DLT-Z	CN	CA	CLM	CY	CYN	CBL	XCP/L	CPB1	CPB2	CPBC
.544	803.110	.36251	.06128	-.04058	-.01908	-.00401	.01024	.77190	-.02507	-.02494	-.02427
.470	897.150	.22525	.05710	-.02059	-.02480	-.00267	.00317	.75141	-.02494	-.02483	-.02411
.574	998.950	.15779	.06000	-.00638	-.02701	-.00245	-.00169	.70041	-.02483	-.02469	-.02395
	GRADIENT	.00000	.00000	.00000	.00000	.00000	.00000	.00000	.00000	.00000	.00000

ORIGINAL PAGE IS
OF POOR QUALITY

AEDC VA422(1A17) ORB AND ET SEPARATING(ORB DATA) (RTR332) (24 JUL 75)

REFERENCE DATA

SREF = 2690.0000 SQ.FT. XMRP = 1089.6000 IN. XO
LREF = 1290.3000 IN. YMRP = .0000 IN. YO
BREF = 1290.3000 IN. ZMRP = 375.0000 IN. ZO
SCALE = .0100

PARAMETRIC DATA

DLT-Y = 60.000 ALPHA = 10.000
BETA = 3.000 DLTALF = -20.000
DLTBTA = .000 MACH = 5.930
AILRON = .000 ELEVON = .000
GRID = 27.000 PO = 94.000

RUN NO. 688/ 0 GRADIENT INTERVAL = -5.00/ 5.00

DLT-X	DLT-Z	CN	CA	CLM	CY	CYN	CBL	XCP/L	CPB1	CPB2	CPBC
200.560	801.460	.23481	.05701	-.02267	-.02429	-.00272	.00378	.75554	-.02533	-.02512	-.02452
200.540	900.050	.15992	.05939	-.00694	-.02710	-.00244	-.00168	.70337	-.02549	-.02532	-.02477
200.650	1000.000	.15390	.06094	-.00478	-.02790	-.00233	-.00175	.69104	-.02543	-.02521	-.02471
	GRADIENT	.00000	.00000	.00000	.00000	.00000	.00000	.00000	.00000	.00000	.00000

RUN NO. 687/ 0 GRADIENT INTERVAL = -5.00/ 5.00

DLT-X	DLT-Z	CN	CA	CLM	CY	CYN	CBL	XCP/L	CPB1	CPB2	CPBC
400.540	800.190	.16314	.05914	-.00796	-.02701	-.00245	-.00161	.70681	-.02535	-.02513	-.02445
400.550	900.060	.15421	.06083	-.00473	-.02778	-.00234	-.00175	.69070	-.02520	-.02488	-.02423
400.600	1000.100	.15373	.06109	-.00480	-.02784	-.00232	-.00174	.69122	-.02507	-.02476	-.02415
	GRADIENT	.00000	.00000	.00000	.00000	.00000	.00000	.00000	.00000	.00000	.00000

AEDC VA422(1A17) ORB AND ET SEPARATING(ORB DATA) (RTR333) (24 JUL 75)

REFERENCE DATA

SREF = 2690.0000 SQ.FT. XMRP = 1089.6000 IN. XO
LREF = 1290.3000 IN. YMRP = .0000 IN. YO
BREF = 1290.3000 IN. ZMRP = 375.0000 IN. ZO
SCALE = .0100

PARAMETRIC DATA

DLT-Y = 60.000 ALPHA = 10.000
BETA = 3.000 DLTALF = -10.000
DLTBTA = 3.000 MACH = 5.930
AILRON = .000 ELEVON = .000
GRID = 27.000 PO = 94.000

RUN NO. 896/ 0 GRADIENT INTERVAL = -5.00/ 5.00

DLT-X	DLT-Z	CN	CA	CLM	CY	CYN	CBL	XCP/L	CPB1	CPB2	CPBC
.471	399.500	.24019	.06832	.01063	-.03417	-.00136	-.00810	.61575	-.02627	-.02598	-.02587
.684	500.720	.28252	.07326	-.00048	-.03263	-.00062	-.00925	.66169	-.02575	-.02546	-.02531
.562	602.260	.30772	.06840	-.01745	-.02464	-.00267	-.00428	.71671	-.02517	-.02485	-.02469
.598	701.760	.25690	.06099	-.02199	-.02530	-.00266	.00392	.74560	-.02466	-.02430	-.02413
.670	799.960	.17818	.05955	-.01131	-.02695	-.00242	-.00092	.72346	-.02424	-.02385	-.02364
	GRADIENT	.00000	.00000	.00000	.00000	.00000	.00000	.00000	.00000	.00000	.00000

AEDC VA422(IA17) ORB AND ET SEPARATING(ORB DATA) (RTR333) (24 JUL 75)

REFERENCE DATA

SREF = 2690.0000 SQ.FT. XMRP = 1089.6000 IN. XO
LREF = 1290.3000 IN. YMRP = .0000 IN. YO
BREF = 1290.3000 IN. ZMRP = 375.0000 IN. ZO
SCALE = .0100

PARAMETRIC DATA

DLT-Y = 60.000 ALPHA = 10.000
BETA = 3.000 DLTALF = -10.000
DLTBTA = 3.000 MACH = 5.930
AILRON = .000 ELEVON = .000
GRID = 27.000 PO = 94.000

RUN NO. 697/ 0 GRADIENT INTERVAL = -5.00/ 5.00

DLT-X	DLT-Z	CN	CA	CLM	CY	CYN	CBL	XCP/L	CPB1	CPB2	CPBC
200.540	400.460	.27815	.07237	.00242	-.03346	-.00050	-.00982	.65130	-.02737	-.02707	-.02699
200.630	499.890	.31527	.07002	-.01530	-.02534	-.00247	-.00568	.70853	-.02757	-.02727	-.02717
200.590	597.730	.27327	.06187	-.02362	-.02514	-.00260	.00391	.74642	-.02785	-.02755	-.02748
200.670	698.060	.18937	.05941	-.01327	-.02680	-.00237	-.00032	.73008	-.02813	-.02786	-.02775
200.620	799.380	.15276	.06019	-.00486	-.02754	-.00237	-.00174	.69184	-.02826	-.02800	-.02782
	GRADIENT	.00000	.00000	.00000	.00000	.00000	.00000	.00000	.00000	.00000	.00000

RUN NO. 698/ 0 GRADIENT INTERVAL = -5.00/ 5.00

DLT-X	DLT-Z	CN	CA	CLM	CY	CYN	CBL	XCP/L	CPB1	CPB2	CPBC
400.610	402.040	.32247	.07012	-.01491	-.02469	-.00260	-.00527	.70624	-.02670	-.02650	-.02607
400.570	502.190	.28408	.06213	-.02464	-.02524	-.00257	.00395	.74674	-.02645	-.02624	-.02576
400.570	600.660	.19765	.05899	-.01452	-.02678	-.00233	-.00010	.73346	-.02640	-.02618	-.02563
400.600	699.990	.15485	.06033	-.00542	-.02751	-.00239	-.00172	.69500	-.02664	-.02642	-.02592
400.720	800.050	.15344	.06160	-.00486	-.02791	-.00231	-.00174	.69168	-.02692	-.02667	-.02612
	GRADIENT	.00000	.00000	.00000	.00000	.00000	.00000	.00000	.00000	.00000	.00000

AEDC VA422(IA17) ORB AND ET SEPARATING(ORB DATA) (RTR334) (24 JUL 75)

REFERENCE DATA

SREF = 2690.0000 SQ.FT. XMRP = 1089.6000 IN. XO
LREF = 1290.3000 IN. YMRP = .0000 IN. YO
BREF = 1290.3000 IN. ZMRP = 375.0000 IN. ZO
SCALE = .0100

PARAMETRIC DATA

DLT-Y = 60.000 ALPHA = 10.000
BETA = 3.000 DLTALF = -20.000
DLTBTA = 3.000 MACH = 5.930
AILRON = .000 ELEVON = .000
GRID = 27.000 PO = 94.000

RUN NO. 690/ 0 GRADIENT INTERVAL = -5.00/ 5.00

DLT-X	DLT-Z	CN	CA	CLM	CY	CYN	CBL	XCP/L	CPB1	CPB2	CPBC
.548	803.560	.38508	.06080	-.04451	-.02250	-.00319	.00700	.77558	-.02431	-.02374	-.02309
.508	901.310	.22810	.05662	-.02106	-.02533	-.00250	.00201	.75234	-.02436	-.02378	-.02315
.561	999.910	.16035	.05979	-.00700	-.02718	-.00242	-.00170	.70367	-.02433	-.02376	-.02311
	GRADIENT	.00000	.00000	.00000	.00000	.00000	.00000	.00000	.00000	.00000	.00000

AEDC VA422(IA17) ORB AND ET SEPARATING(ORB DATA) (RTR334) 24 JUL 75)

REFERENCE DATA

SREF = 2690.0000 SQ.FT. XMRP = 1089.6000 IN. XO
LREF = 1290.3000 IN. YMRP = .0000 IN. YO
BREF = 1290.3000 IN. ZMRP = 375.0000 IN. ZO
SCALE = .0100

PARAMETRIC DATA

DLT-Y = 60.000 ALPHA = 10.000
BETA = 3.000 DLTALF = -20.000
DLTBTA = 3.000 MACH = 5.930
AILRON = .000 ELEVON = .000
GRID = 27.000 PO = 94.000

RUN NO. 691/ 0 GRADIENT INTERVAL = -5.00/ 5.00

DLT-X	DLT-Z	CN	CA	CLM	CY	CYN	CBL	XCP/L	CPB1	CPB2	CPBC
200.520	797.050	.24212	.05706	-.02409	-.02507	-.00253	.00252	.75951	-.02433	-.02391	-.02323
200.540	898.680	.16436	.05964	-.00845	-.02718	-.00243	-.00162	.71141	-.02429	-.02396	-.02328
200.580	1000.100	.15373	.06084	-.00472	-.02763	-.00235	-.00174	.69072	-.02436	-.02401	-.02336
	GRADIENT	.00000	.00000	.00000	.00000	.00000	.00000	.00000	.00000	.00000	.00000

RUN NO. 692/ 0 GRADIENT INTERVAL = -5.00/ 5.00

DLT-X	DLT-Z	CN	CA	CLM	CY	CYN	CBL	XCP/L	CPB1	CPB2	CPBC
400.520	800.260	.16724	.05882	-.00925	-.02705	-.00243	-.00158	.71528	-.02512	-.02492	-.02444
400.580	899.960	.15385	.06077	-.00478	-.02779	-.00233	-.00175	.69109	-.02501	-.02473	-.02436
400.570	1000.100	.15434	.06214	-.00488	-.02779	-.00230	-.00173	.69165	-.02457	-.02437	-.02374
	GRADIENT	.00000	.00000	.00000	.00000	.00000	.00000	.00000	.00000	.00000	.00000

AEDC VA422(IA17) ORB AND ET SEPARATING(ORB DATA) (RTR335) (24 JUL 75)

REFERENCE DATA

SREF = 2690.0000 SQ.FT. XMRP = 1089.6000 IN. XO
LREF = 1290.3000 IN. YMRP = .0000 IN. YO
BREF = 1290.3000 IN. ZMRP = 375.0000 IN. ZO
SCALE = .0100

PARAMETRIC DATA

DLT-Y = 60.000 ALPHA = .000
BETA = .000 DLTALF = .000
DLTBTA = .000 MACH = 7.980
AILRON = .000 ELEVON = .000
GRID = 16.000 PO = 420.000

RUN NO. 720/ 0 GRADIENT INTERVAL = -5.00/ 5.00

DLT-X	DLT-Z	CN	CA	CLM	CY	CYN	CBL	XCP/L	CPB1	CPB2	CPBC
.442	20.048	-.02801	.07815	-.01290	-.00284	.00114	.00102	.19930	-.01385	-.01322	-.01334
.461	101.970	-.00922	.08818	-.00205	.00283	.00344	-.00034	.43765	-.01400	-.01337	-.01354
.409	200.450	.01518	.08226	-.00423	.00556	-.00005	-.00122	.93926	-.01412	-.01351	-.01366
.548	299.030	.01813	.07653	-.01537	.00487	-.00042	.00279	1.50750	-.01415	-.01353	-.01363
.541	397.870	-.03370	.07231	-.01488	.00082	.00026	.00021	.21834	-.01415	-.01350	-.01356
.455	499.650	-.05190	.07304	-.01151	.00045	.00030	-.00008	.43822	-.01413	-.01347	-.01349
	GRADIENT	.00000	.00000	.00000	.00000	.00000	.00000	.00000	.00000	.00000	.00000

AEDC VA422(1A17) ORB AND ET SEPARATING(ORB DATA) (RTR335) (24 JUL 75)

REFERENCE DATA

SREF = 2690.0000 SQ.FT. XMRP = 1089.6000 IN. XO
LREF = 1290.3000 IN. YMRP = .0000 IN. YO
BREF = 1290.3000 IN. ZMRP = 375.0000 IN. ZO
SCALE = .0100

PARAMETRIC DATA

DLT-Y = 60.000 ALPHA = .000
BETA = .000 DLTALF = .000
DLTBTA = .000 MACH = 7.980
AILRON = .000 ELEVON = .000
GRID = 16.000 PO = 420.000

RUN NO. 719/ 0 GRADIENT INTERVAL = -5.00/ 5.00

DLT-X	DLT-Z	CN	CA	CLM	CY	CYN	CBL	XCP/L	CPB1	CPB2	CPBC
200.540	20.610	-.00110	.08616	.00254	.00366	.00398	-.00025	.00000	-.01373	-.01305	-.01299
200.540	100.870	.00887	.07933	.00113	.00449	.00176	-.00137	.53232	-.01386	-.01322	-.01325
200.550	202.290	.03285	.06063	-.01103	.00722	-.00080	.00064	.99586	-.01383	-.01319	-.01325
200.460	301.510	-.00396	.07273	-.01642	.00141	.00014	.00156	-3.49060	-.01386	-.01322	-.01331
200.450	400.200	-.04555	.07236	-.01313	.00055	.00028	-.00003	.37176	-.01385	-.01321	-.01333
200.480	500.070	-.05177	.07320	-.01137	.00038	.00031	-.00008	.44044	-.01384	-.01322	-.01336
	GRADIENT	.00000	.00000	.00000	.00000	.00000	.00000	.00000	.00000	.00000	.00000

AEDC VA422(1A17) ORB AND ET SEPARATING(ORB DATA) (RTR336) (24 JUL 75)

REFERENCE DATA

SREF = 2690.0000 SQ.FT. XMRP = 1089.6000 IN. XO
LREF = 1290.3000 IN. YMRP = .0000 IN. YO
BREF = 1290.3000 IN. ZMRP = 375.0000 IN. ZO
SCALE = .0100

PARAMETRIC DATA

DLT-Y = 60.000 ALPHA = .000
BETA = .000 DLTALF = -10.000
DLTBTA = .000 MACH = 7.980
AILRON = .000 ELEVON = .000
GRID = 16.000 PO = 420.000

RUN NO. 726/ 0 GRADIENT INTERVAL = -5.00/ 5.00

DLT-X	DLT-Z	CN	CA	CLM	CY	CYN	CBL	XCP/L	CPB1	CPB2	CPBC
.505	402.640	.11343	.07525	-.02977	.00868	-.00130	.00508	.92247	-.00467	-.00445	-.00414
.520	496.330	-.00373	.07081	-.01830	.00130	.00017	.00091	-4.24940	-.00526	-.00497	-.00487
.590	598.990	-.04740	.07183	-.01238	.00046	.00030	-.00006	.39892	-.00590	-.00554	-.00556
.549	750.090	-.05089	.06945	-.01138	.00034	.00033	-.00008	.43632	-.00546	-.00516	-.00442
.573	800.200	-.05138	.07095	-.01132	.00024	.00032	-.00008	.43951	-.00420	-.00399	-.00299
	GRADIENT	.00000	.00000	.00000	.00000	.00000	.00000	.00000	.00000	.00000	.00000

RUN NO. 727/ 0 GRADIENT INTERVAL = -5.00/ 5.00

DLT-X	DLT-Z	CN	CA	CLM	CY	CYN	CBL	XCP/L	CPB1	CPB2	CPBC
200.390	402.620	.04262	.06908	-.02298	.00253	-.00003	.00319	1.19900	-.00453	-.00433	-.00396
200.430	500.350	-.03453	.07070	-.01544	.00073	.00025	.00004	.21272	-.00415	-.00408	-.00334
200.440	600.170	-.05128	.07008	-.01133	.00030	.00032	-.00008	.43901	-.00492	-.00483	-.00404
200.450	750.050	-.05210	.07103	-.01138	.00027	.00031	-.00008	.44152	-.00599	-.00585	-.00613
200.450	800.160	-.05171	.07309	-.01138	.00024	.00030	-.00008	.44035	-.00514	-.00508	-.00523
	GRADIENT	.00000	.00000	.00000	.00000	.00000	.00000	.00000	.00000	.00000	.00000

AEDC VA422(IA17) ORB AND ET SEPARATING(ORB DATA) (RTR336) (24 JUL 75)

REFERENCE DATA

SREF =	2690.0000 SQ.FT.	XMRP =	1089.6000 IN. XO
LREF =	1290.3000 IN.	YMRP =	.0000 IN. YO
BREF =	1290.3000 IN.	ZMRP =	375.0000 IN. ZO
SCALE =	.0100		

PARAMETRIC DATA

DLT-Y =	60.000	ALPHA =	.000
BETA =	.000	DLTALF =	-10.000
DLTBTA =	.000	MACH =	7.980
AILRON =	.000	ELEVON =	.000
GRID =	16.000	PO =	420.000

RUN NO. 726/ 0 GRADIENT INTERVAL = -5.00/ 5.00

DLT-X	DLT-Z	CN	CA	CLM	CY	CYN	CBL	XCP/L	CPB1	CPB2	CPBC
400.470	400.190	-.00294	.06654	-.01931	.00141	.00014	.00075	.00000	-.00329	-.00341	-.00163
400.490	498.990	-.04747	.07112	-.01210	.00047	.00031	-.00006	.40500	-.00141	-.00206	-.00006
400.490	600.260	-.05031	.06871	-.01134	.00034	.00033	-.00008	.43451	-.00175	-.00230	-.00077
400.450	750.210	-.05092	.07280	-.01131	.00022	.00029	-.00008	.43790	-.00105	-.00147	-.00013
400.460	800.170	-.05128	.07298	-.01131	.00019	.00029	-.00008	.43955	-.00207	-.00233	-.00164
	GRADIENT	.00000	.00000	.00000	.00000	.00000	.00000	.00000	.00000	.00000	.00000

AEDC VA422(IA17) ORB AND ET SEPARATING(ORB DATA) (RTR338) (24 JUL 75)

REFERENCE DATA

SREF =	2690.0000 SQ.FT.	XMRP =	1089.6000 IN. XO
LREF =	1290.3000 IN.	YMRP =	.0000 IN. YO
BREF =	1290.3000 IN.	ZMRP =	375.0000 IN. ZO
SCALE =	.0100		

PARAMETRIC DATA

DLT-Y =	60.000	ALPHA =	.000
BETA =	.000	DLTALF =	-20.000
DLTBTA =	.000	MACH =	7.980
AILRON =	.000	ELEVON =	.000
GRID =	16.000	PO =	420.000

RUN NO. 737/ 0 GRADIENT INTERVAL = -5.00/ 5.00

DLT-X	DLT-Z	CN	CA	CLM	CY	CYN	CBL	XCP/L	CPB1	CPB2	CPBC
.443	799.880	.04780	.06626	-.03153	.00330	-.00031	.00133	1.31970	-.00142	-.00107	-.00121
.490	898.400	-.04346	.06945	-.01358	.00084	.00023	-.00004	.34744	-.00188	-.00146	-.00156
.419	1000.200	-.04992	.07004	-.01134	.00078	.00026	-.00007	.43285	-.00194	-.00150	-.00148
	GRADIENT	.00000	.00000	.00000	.00000	.00000	.00000	.00000	.00000	.00000	.00000

RUN NO. 735/ 0 GRADIENT INTERVAL = -5.00/ 5.00

DLT-X	DLT-Z	CN	CA	CLM	CY	CYN	CBL	XCP/L	CPB1	CPB2	CPBC
200.460	751.530	.02242	.06298	-.02827	.00242	-.00009	.00074	1.92080	.00492	.00479	.00591
200.340	799.340	-.03649	.06682	-.01499	.00109	.00018	-.00009	.24909	.00465	.00461	.00546
200.310	900.290	-.04904	.06998	-.01126	.00081	.00028	-.00007	.43046	.00420	.00423	.00479
200.320	1000.200	-.04927	.06960	-.01132	.00077	.00025	-.00007	.43024	.00332	.00341	.00368
	GRADIENT	.00000	.00000	.00000	.00000	.00000	.00000	.00000	.00000	.00000	.00000

AEDC VA422(IA17) ORB AND ET SEPARATING(ORB DATA) (RTR338) (24 JUL 75)

REFERENCE DATA

SREF = 2690.0000 SQ.FT. XMRP = 1089.6000 IN. XO
LREF = 1290.3000 IN. YMRP = .0000 IN. YO
BREF = 1290.3000 IN. ZMRP = 375.0000 IN. ZO
SCALE = .0100

PARAMETRIC DATA

DLT-Y = 60.000 ALPHA = .000
BETA = .000 DLTALF = -20.000
DLTBTA = .000 MACH = 7.980
AILRON = .000 ELEVON = .000
GRID = 16.000 PO = 420.000

RUN NO. 734/ 0 GRADIENT INTERVAL = -5.00/ 5.00

DLT-X	DLT-Z	CN	CA	CLM	CY	CYN	CBL	XCP/L	CPB1	CPB2	CPBC
400.280	750.230	-.04889	.08775	-.01132	.00074	.00024	-.00007	.42851	.00347	.00345	.00414
400.390	800.300	-.04933	.06902	-.01130	.00073	.00026	-.00007	.43100	.00357	.00351	.00417
400.430	900.320	-.04982	.06921	-.01129	.00066	.00025	-.00007	.43336	.00376	.00368	.00457
400.380	1000.200	-.04989	.06869	-.01135	.00062	.00024	-.00006	.43247	.00336	.00342	.00431
	GRADIENT	.00000	.00000	.00000	.00000	.00000	.00000	.00000	.00000	.00000	.00000

AEDC VA422(IA17) ORB AND ET SEPARATING(ORB DATA) (RTR339) (24 JUL 75)

REFERENCE DATA

SREF = 2690.0000 SQ.FT. XMRP = 1089.6000 IN. XO
LREF = 1290.3000 IN. YMRP = .0000 IN. YO
BREF = 1290.3000 IN. ZMRP = 375.0000 IN. ZO
SCALE = .0100

PARAMETRIC DATA

DLT-Y = 60.000 ALPHA = .000
BETA = .000 DLTALF = .000
DLTBTA = 3.000 MACH = 7.980
AILRON = .000 ELEVON = .000
GRID = 16.000 PO = 420.000

RUN NO. 744/ 0 GRADIENT INTERVAL = -5.00/ 5.00

DLT-X	DLT-Z	CN	CA	CLM	CY	CYN	CBL	XCP/L	CPB1	CPB2	CPBC
.515	18.288	-.02436	.07792	-.01167	-.00302	.00016	-.00089	.18107	-.00984	-.00931	-.00987
.505	99.701	-.00611	.08745	-.00048	.00069	.00244	-.00079	.58157	-.00946	-.00896	-.00952
.546	201.460	.02521	.08357	-.00514	.00360	-.00032	-.00154	.86398	-.00901	-.00853	-.00910
.508	302.390	.01914	.07414	-.01562	.00170	.00015	.00105	1.47600	-.00853	-.00809	-.00866
.525	400.500	-.03331	.07215	-.01466	.00073	.00025	-.00000	.21975	-.00803	-.00761	-.00816
.501	500.160	-.05056	.07296	-.01145	.00050	.00027	-.00007	.43361	-.00745	-.00708	-.00758
	GRADIENT	.00000	.00000	.00000	.00000	.00000	.00000	.00000	.00000	.00000	.00000

RUN NO. 745/ 0 GRADIENT INTERVAL = -5.00/ 5.00

DLT-X	DLT-Z	CN	CA	CLM	CY	CYN	CBL	XCP/L	CPB1	CPB2	CPBC
200.480	23.778	.00446	.08689	.00357	.00144	.00243	-.00090	-.14118	-.01093	-.01038	-.01109
200.470	99.157	.01017	.08156	.00134	.00190	.00119	-.00206	.52862	-.01131	-.01076	-.01148
200.470	199.500	.03647	.07805	-.01059	.00179	.00058	-.00034	.95043	-.01145	-.01088	-.01146
200.490	297.770	-.00481	.07077	-.01582	.00031	.00065	.00045	-2.62900	-.01152	-.01092	-.01145
200.450	398.690	-.04512	.07255	-.01315	.00064	.00027	-.00006	.36859	-.01167	-.01106	-.01156
200.640	499.990	-.05179	.07338	-.01133	.00062	.00029	-.00008	.44130	-.01181	-.01120	-.01166
	GRADIENT	.00000	.00000	.00000	.00000	.00000	.00000	.00000	.00000	.00000	.00000

ORIGINAL PAGE IS OF POOR QUALITY

AEDC VA422(IA17) ORB AND ET SEPARATING(ORB DATA) (RTR340) (24 JUL 75)

REFERENCE DATA

SREF = 2690.0000 SQ.FT. XMRP = 1089.6000 IN. XO
LREF = 1290.3000 IN. YMRP = .0000 IN. YO
BREF = 1290.3000 IN. ZMRP = 375.0000 IN. ZO
SCALE = .0100

PARAMETRIC DATA

DLT-Y = 60.000 ALPHA = .000
BETA = .000 DLTALF = -10.000
DLTBTA = 3.000 MACH = 7.980
AILRON = .000 ELEVON = .000
GRID = 16.000 PO = 420.000

RUN NO. 741/ 0 GRADIENT INTERVAL = -5.00/ 5.00

DLT-X	DLT-Z	CN	CA	CLM	CY	CYN	CBL	XCP/L	CPB1	CPB2	CPBC
.495	404.260	.12117	.07289	-.03117	.00286	-.00011	.00128	.91724	-.00054	-.00064	-.00092
.460	501.120	-.00692	.07047	-.01786	.00079	.00022	.00012	-1.92110	.00084	.00071	.00070
.484	600.210	-.04769	.07175	-.01214	.00059	.00026	-.00007	.40539	.00246	.00216	.00268
.563	750.020	-.05143	.06935	-.01144	.00055	.00025	-.00008	.43762	.00285	.00252	.00330
-.081	802.330	-.05117	.07058	-.01135	.00061	.00026	-.00007	.43825	.00330	.00288	.00387
	GRADIENT	.00000	.00000	.00000	.00000	.00000	.00000	.00000	.00000	.00000	.00000

RUN NO. 742/ 0 GRADIENT INTERVAL = -5.00/ 5.00

DLT-X	DLT-Z	CN	CA	CLM	CY	CYN	CBL	XCP/L	CPB1	CPB2	CPBC
200.500	398.030	.05280	.06917	-.02493	.00112	.00015	.00128	1.13220	-.00323	-.00300	-.00345
200.500	497.610	-.02993	.07085	-.01621	.00065	.00023	-.00002	.11826	-.00345	-.00318	-.00343
200.440	599.960	-.05002	.07258	-.01133	.00052	.00024	-.00007	.43355	-.00399	-.00368	-.00406
200.480	750.090	-.05078	.07031	-.01135	.00057	.00027	-.00007	.43653	-.00369	-.00348	-.00309
200.470	800.210	-.05104	.07309	-.01133	.00061	.00025	-.00007	.43803	-.00308	-.00290	-.00251
	GRADIENT	.00000	.00000	.00000	.00000	.00000	.00000	.00000	.00000	.00000	.00000

RUN NO. 743/ 0 GRADIENT INTERVAL = -5.00/ 5.00

DLT-X	DLT-Z	CN	CA	CLM	CY	CYN	CBL	XCP/L	CPB1	CPB2	CPBC
400.490	401.620	-.00093	.06724	-.01921	.00097	.00019	.00026	.00000	-.00364	-.00359	-.00274
400.360	500.000	-.04740	.07172	-.01232	.00056	.00026	-.00006	.40018	-.00378	-.00373	-.00272
400.400	600.030	-.05148	.06926	-.01140	.00054	.00027	-.00008	.43851	-.00557	-.00530	-.00472
400.410	750.070	-.05176	.07269	-.01138	.00049	.00027	-.00008	.44013	-.00611	-.00573	-.00626
400.450	800.110	-.05152	.07348	-.01138	.00053	.00025	-.00008	.43911	-.00523	-.00488	-.00529
	GRADIENT	.00000	.00000	.00000	.00000	.00000	.00000	.00000	.00000	.00000	.00000

AEDC VA422(IA17) ORB AND ET SEPARATING(ORB DATA) (RTR342) (24 JUL 75)

REFERENCE DATA

SREF = 2690.0000 SQ.FT. XMRP = 1089.6000 IN. XO
LREF = 1290.3000 IN. YMRP = .0000 IN. YO
BREF = 1290.3000 IN. ZMRP = 375.0000 IN. ZO
SCALE = .0100

PARAMETRIC DATA

DLT-Y = 60.000 ALPHA = .000
BETA = .000 DLTALF = -20.000
DLTBTA = 3.000 MACH = 7.980
AILRON = .000 ELEVON = .000
GRID = 16.000 PO = 420.000

RUN NO. 740/ 0 GRADIENT INTERVAL = -5.00/ 5.00

DLT-X	DLT-Z	CN	CA	CLM	CY	CYN	CBL	XCP/L	CPB1	CPB2	CPBC
.450	802.410	.05820	.06561	-.03274	.00080	.00021	-.00040	1.22260	.00173	.00169	.00207
.462	900.390	-.04084	.06805	-.01392	.00045	.00025	-.00009	.31914	.00184	.00174	.00218
.493	1000.300	-.04950	.06949	-.01132	.00051	.00024	-.00008	.43130	.00191	.00184	.00227
	GRADIENT	.00000	.00000	.00000	.00000	.00000	.00000	.00000	.00000	.00000	.00000

RUN NO. 738/ 0 GRADIENT INTERVAL = -5.00/ 5.00

DLT-X	DLT-Z	CN	CA	CLM	CY	CYN	CBL	XCP/L	CPB1	CPB2	CPBC
200.280	751.370	.03386	.06262	-.03092	.00085	.00020	-.00001	1.57330	-.00020	.00006	.00052
200.320	800.520	-.03205	.06723	-.01612	.00039	.00025	-.00011	.15695	-.00026	-.00014	.00029
200.350	900.410	-.04942	.06957	-.01131	.00065	.00024	-.00007	.43121	-.00040	-.00031	.00011
200.390	1000.300	-.04983	.07014	-.01131	.00063	.00025	-.00008	.43311	-.00032	-.00022	.00016
	GRADIENT	.00000	.00000	.00000	.00000	.00000	.00000	.00000	.00000	.00000	.00000

RUN NO. 739/ 0 GRADIENT INTERVAL = -5.00/ 5.00

DLT-X	DLT-Z	CN	CA	CLM	CY	CYN	CBL	XCP/L	CPB1	CPB2	CPBC
400.290	748.880	-.04891	.06785	-.01141	.00043	.00026	-.00007	.42662	.00077	.00148	.00237
400.480	800.500	-.04864	.06932	-.01126	.00052	.00026	-.00007	.42855	.00170	.00241	.00332
400.330	900.400	-.04870	.06927	-.01129	.00049	.00025	-.00007	.42806	.00167	.00233	.00293
400.450	1000.300	-.04917	.06869	-.01136	.00045	.00026	-.00008	.42900	.00165	.00218	.00275
	GRADIENT	.00000	.00000	.00000	.00000	.00000	.00000	.00000	.00000	.00000	.00000

AEDC VA422(IA17) ORB AND ET SEPARATING(ORB DATA) (RYR343) (24 JUL 75)

REFERENCE DATA

SREF =	2890.0000 SQ.FT.	XMRP =	1089.6000 IN. XO
LREF =	1290.3000 IN.	YMRP =	.0000 IN. YO
BREF =	1290.3000 IN.	ZMRP =	375.0000 IN. ZO
SCALE =	.0100		

PARAMETRIC DATA

DLT-Y =	50.000	ALPHA =	.000
BETA =	.000	DLTALF =	.000
DLTBTA =	.000	MACH =	7.980
AILRON =	.000	ELEVON =	.000
GRID =	15.000	PO =	300.000

RUN NO. 871/ 0 GRADIENT INTERVAL = -5.00/ 5.00

DLT-X	DLT-Z	CN	CA	CLM	CY	CYN	CBL	XCP/L	CPB1	CPB2	CPBC
.618	17.679	-.01940	.08202	-.01211	-.00182	.00121	.00151	.03571	-.00818	-.00829	-.00764
.552	101.350	-.00377	.08811	-.00122	.00415	.00357	-.00087	.00000	-.00876	-.00885	-.00832
.581	200.190	.01901	.08334	-.00532	.00514	.00002	-.00119	.93984	-.00920	-.00926	-.00877
.601	299.260	.01889	.07736	-.01562	.00451	-.00044	.00315	1.48760	-.00956	-.00958	-.00912
.486	398.540	-.03307	.07362	-.01461	.00086	.00019	.00017	.21804	-.00986	-.00986	-.00939
.486	499.920	-.05060	.07208	-.01140	.00042	.00027	-.00009	.43476	-.01005	-.01004	-.00951
	GRADIENT	.00000	.00000	.00000	.00000	.00000	.00000	.00000	.00000	.00000	.00000

RUN NO. 870/ 0 GRADIENT INTERVAL = -5.00/ 5.00

DLT-X	DLT-Z	CN	CA	CLM	CY	CYN	CBL	XCP/L	CPB1	CPB2	CPBC
200.430	20.645	.00667	.08680	.00186	.00557	.00402	-.00051	.38044	-.00702	-.00719	-.00622
200.530	100.610	.01159	.08064	.00055	.00493	.00142	-.00149	.61238	-.00670	-.00693	-.00585
200.460	201.590	.03371	.08153	-.01169	.00802	-.00103	.00091	1.00670	-.00663	-.00688	-.00563
200.410	301.040	-.00439	.07228	-.01627	.00141	.00009	.00151	.00000	-.00684	-.00708	-.00587
200.600	400.080	-.04429	.07354	-.01292	.00056	.00025	-.00004	.36834	-.00723	-.00745	-.00608
200.620	500.080	-.05042	.07152	-.01133	.00045	.00026	-.00009	.43522	-.00847	-.00856	-.00756
	GRADIENT	.00000	.00000	.00000	.00000	.00000	.00000	.00000	.00000	.00000	.00000

AEDC VA422(IA17) ORB AND ET SEPARATING(ORB DATA) (RTR344) (24 JUL 75)

REFERENCE DATA

SREF = 2890.0000 SQ.FT. XMRP = 1089.8000 IN. XO
LREF = 1290.3000 IN. YMRP = .0000 IN. YO
BREF = 1290.3000 IN. ZMRP = 375.0000 IN. ZO
SCALE = .0100

PARAMETRIC DATA

DLT-Y = 80.000 ALPHA = .000
BETA = .000 DLTALF = -10.000
DLTBTA = .000 MACH = 7.980
AILRON = .000 ELEVON = .000
GRID = 16.000 PO = 300.000

RUN NO. 879/ 0 GRADIENT INTERVAL = -5.00/ 5.00

DLT-X	DLT-Z	CN	CA	CLM	CY	CYN	CBL	XCP/L	CPB1	CPB2	CPBC
.501	401.970	.11333	.07605	-.02986	.00921	-.00140	.00517	.92346	-.00057	-.00119	-.00008
.492	497.410	-.00485	.07184	-.01807	.00149	.00013	.00082	-3.06460	-.00139	-.00195	-.00109
.540	599.300	-.04661	.07301	-.01228	.00062	.00025	-.00006	.39662	-.00226	-.00271	-.00203
.506	750.110	-.04996	.07032	-.01134	.00058	.00027	-.00008	.43302	-.00258	-.00311	-.00184
.550	800.180	-.05054	.07057	-.01131	.00037	.00026	-.00008	.43617	-.00154	-.00230	-.00054
	GRADIENT	.00000	.00000	.00000	.00000	.00000	.00000	.00000	.00000	.00000	.00000

RUN NO. 878/ 0 GRADIENT INTERVAL = -5.00/ 5.00

DLT-X	DLT-Z	CN	CA	CLM	CY	CYN	CBL	XCP/L	CPB1	CPB2	CPBC
200.390	401.890	.04353	.06995	-.02281	.00307	-.00015	.00352	1.18400	.00079	-.00007	.00135
200.420	500.240	-.03335	.07171	-.01534	.00089	.00019	.00003	.20018	.00167	.00067	.00249
200.430	600.110	-.05009	.07101	-.01123	.00052	.00025	-.00008	.43571	.00163	.00057	.00266
200.430	750.030	-.05098	.07065	-.01135	.00048	.00026	-.00009	.43744	.00042	-.00042	.00120
200.450	800.150	-.05089	.07113	-.01135	.00048	.00027	-.00008	.43709	.00034	-.00051	.00091
	GRADIENT	.00000	.00000	.00000	.00000	.00000	.00000	.00000	.00000	.00000	.00000

RUN NO. 877/ 0 GRADIENT INTERVAL = -5.00/ 5.00

DLT-X	DLT-Z	CN	CA	CLM	CY	CYN	CBL	XCP/L	CPB1	CPB2	CPBC
400.520	400.260	-.00249	.06765	-.01905	.00164	.00004	.00084	.00000	.00095	-.00011	.00214
400.410	499.300	-.04622	.07226	-.01215	.00069	.00025	-.00006	.39719	.00187	.00063	.00293
400.420	600.200	-.04943	.07011	-.01130	.00058	.00027	-.00008	.43140	.00140	.00027	.00212
400.420	750.090	-.05022	.07064	-.01128	.00061	.00026	-.00008	.43536	.00206	.00073	.00299
400.430	800.140	-.05042	.07297	-.01126	.00025	.00026	-.00009	.43662	.00222	.00092	.00304
	GRADIENT	.00000	.00000	.00000	.00000	.00000	.00000	.00000	.00000	.00000	.00000

AEDC VA422(IA17) ORB AND ET SEPARATING(ORB DATA) (RTR345) (24 JUL 75)

REFERENCE DATA

SREF = 2690.0000 SQ.FT. XMRP = 1089.6000 IN. XO
LREF = 1290.3000 IN. YMRP = .0000 IN. YO
BREF = 1290.3000 IN. ZMRP = 375.0000 IN. ZO
SCALE = .0100

PARAMETRIC DATA

DLT-Y = 60.000 ALPHA = .000
BETA = 3.000 DLTALF = .000
DLTBTA = .000 MACH = 7.980
AILRON = .000 ELEVON = .000
GRID = 17.000 PO = 420.000

RUN NO. 750/ 0 GRADIENT INTERVAL = -5.00/ 5.00

DLT-X	DLT-Z	CN	CA	CLM	CY	CYN	CBL	XCP/L	CPB1	CPB2	CPBC
.500	20.205	-.01685	.08052	-.01280	-.03738	-.00134	.00035	-.69967	-.01375	-.01362	-.01331
.485	102.220	.00387	.08674	-.00074	-.03313	.00050	-.00207	.85226	-.01389	-.01376	-.01349
.574	199.760	.01773	.08102	-.00466	-.02882	-.00199	-.00161	.92290	-.01403	-.01391	-.01361
.563	298.610	.01185	.07802	-.01549	-.02458	-.00330	.00353	1.96650	-.01401	-.01387	-.01354
.447	398.100	-.03582	.07317	-.01441	-.03001	-.00228	.00093	.25764	-.01399	-.01386	-.01351
.672	499.760	-.05320	.07408	-.01120	-.03087	-.00217	.00022	.44952	-.01394	-.01381	-.01343
	GRADIENT	.00000	.00000	.00000	.00000	.00000	.00000	.00000	.00000	.00000	.00000

RUN NO. 749/ 0 GRADIENT INTERVAL = -5.00/ 5.00

DLT-X	DLT-Z	CN	CA	CLM	CY	CYN	CBL	XCP/L	CPB1	CPB2	CPBC
200.430	20.910	.01281	.08665	.00262	-.03218	.00080	-.00135	.45571	-.01359	-.01350	-.01306
200.500	101.390	.01462	.07820	.00151	-.03052	-.00108	-.00227	.55703	-.01374	-.01365	-.01327
200.580	202.180	.02642	.07981	-.01049	-.02401	-.00316	.00052	1.05700	-.01376	-.01366	-.01331
200.530	301.490	-.00610	.07367	-.01667	-.02876	-.00237	.00272	-2.07270	-.01383	-.01372	-.01339
200.510	400.310	-.04735	.07347	-.01265	-.03032	-.00224	.00039	.39274	-.01390	-.01377	-.01348
200.500	500.210	-.05341	.07439	-.01119	-.03068	-.00217	.00021	.45044	-.01395	-.01379	-.01352
	GRADIENT	.00000	.00000	.00000	.00000	.00000	.00000	.00000	.00000	.00000	.00000

AEDC VA422(IA17) ORB AND ET SEPARATING(ORB DATA) (RTR346) (24 JUL 75)

REFERENCE DATA

SREF = 2690.0000 SQ.FT. XMRP = 1089.6000 IN. XO
LREF = 1290.3000 IN. YMRP = .0000 IN. YO
BREF = 1290.3000 IN. ZMRP = 375.0000 IN. ZO
SCALE = .0100

PARAMETRIC DATA

DLT-Y = 60.000 ALPHA = .000
BETA = 3.000 DLTALF = -10.000
DLTBTA = .000 MACH = 7.980
AILRON = .000 ELEVON = .000
GRID = 17.000 PO = 420.000

RUN NO. 758/ 0 GRADIENT INTERVAL = -5.00/ 5.00

DLT-X	DLT-Z	CN	CA	CLM	CY	CYN	CBL	XCP/L	CPB1	CPB2	CPBC
.620	402.490	.11299	.07650	-.03086	-.01922	-.00422	.00721	.93314	-.01132	-.01150	-.01036
.628	496.500	-.00441	.07180	-.01856	-.02865	-.00238	.00232	-3.54430	-.01098	-.01116	-.01008
.513	598.970	-.04906	.07289	-.01201	-.03059	-.00221	.00027	.41526	-.01085	-.01101	-.01000
.616	750.110	-.05209	.07395	-.01107	-.03065	-.00214	.00020	.44746	-.01097	-.01109	-.01027
.552	800.180	-.05262	.07414	-.01114	-.03083	-.00214	.00021	.44833	-.01117	-.01128	-.01058
	GRADIENT	.00000	.00000	.00000	.00000	.00000	.00000	.00000	.00000	.00000	.00000

RUN NO. 757/ 0 GRADIENT INTERVAL = -5.00/ 5.00

DLT-X	DLT-Z	CN	CA	CLM	CY	CYN	CBL	XCP/L	CPB1	CPB2	CPBC
200.490	402.600	.03986	.07070	-.02308	-.02650	-.00260	.00529	1.23910	-.01276	-.01283	-.01231
200.530	500.250	-.03574	.07182	-.01506	-.02988	-.00233	.00066	.23870	-.01284	-.01291	-.01250
200.530	600.160	-.05287	.07366	-.01111	-.03059	-.00215	.00021	.44993	-.01276	-.01281	-.01244
200.540	750.040	-.05348	.07421	-.01114	-.03072	-.00213	.00021	.45178	-.01251	-.01258	-.01216
200.540	800.120	-.05320	.07423	-.01112	-.03077	-.00213	.00021	.45105	-.01234	-.01241	-.01195
	GRADIENT	.00000	.00000	.00000	.00000	.00000	.00000	.00000	.00000	.00000	.00000

RUN NO. 756/ 0 GRADIENT INTERVAL = -5.00/ 5.00

DLT-X	DLT-Z	CN	CA	CLM	CY	CYN	CBL	XCP/L	CPB1	CPB2	CPBC
400.470	400.320	-.00163	.07045	-.01953	-.02872	-.00241	.00197	.00000	-.01226	-.01238	-.01161
400.470	498.780	-.04829	.07246	-.01186	-.03053	-.00222	.00026	.41435	-.01184	-.01200	-.01109
400.480	600.240	-.05169	.07351	-.01107	-.03079	-.00216	.00019	.44589	-.01161	-.01173	-.01086
400.490	750.170	-.05256	.07397	-.01112	-.03068	-.00214	.00021	.44835	-.01172	-.01183	-.01115
400.420	800.150	-.05261	.07414	-.01111	-.03072	-.00215	.00021	.44887	-.01191	-.01200	-.01141
	GRADIENT	.00000	.00000	.00000	.00000	.00000	.00000	.00000	.00000	.00000	.00000

ORIGINAL PAGE IS OF POOR QUALITY

AEDC VA422(IA17) ORB AND ET SEPARATING(ORB DATA) (RTR348) (24 JUL 75)

REFERENCE DATA

SREF = 2890.0000 SQ.FT. XMRP = 1089.6000 IN. XO
LREF = 1290.3000 IN. YMRP = .0000 IN. YO
BREF = 1290.3000 IN. ZMRP = 375.0000 IN. ZO
SCALE = .0100

PARAMETRIC DATA

DLT-Y = 60.000 ALPHA = .000
BETA = 3.000 DLTALF = -20.000
DLTBTA = .000 MACH = 7.980
AILRON = .000 ELEVON = .000
GRID = 17.000 PO = 420.000

RUN NO. 767/ 0 GRADIENT INTERVAL = -5.00/ 5.00

DLT-X	DLT-Z	CN	CA	CLM	CY	CYN	CBL	XCP/L	CPB1	CPB2	CPBC
.397	800.240	.04629	.06641	-.03145	-.02504	-.00267	.00329	1.33940	-.00572	-.00631	-.00520
.359	898.540	-.04305	.07049	-.01366	-.02986	-.00227	.00047	.34266	-.00565	-.00623	-.00505
.504	1000.200	-.05115	.07281	-.01104	-.03047	-.00215	.00019	.44411	-.00544	-.00604	-.00483
	GRADIENT	.00000	.00000	.00000	.00000	.00000	.00000	.00000	.00000	.00000	.00000

RUN NO. 765/ 0 GRADIENT INTERVAL = -5.00/ 5.00

DLT-X	DLT-Z	CN	CA	CLM	CY	CYN	CBL	XCP/L	CPB1	CPB2	CPBC
200.420	751.480	.02067	.06386	-.02794	-.02618	-.00255	.00191	2.01190	-.00071	-.00159	.00051
200.430	799.320	-.03603	.06818	-.01508	-.02943	-.00235	.00063	.24144	-.00034	-.00114	.00086
200.450	900.140	-.05057	.07155	-.01097	-.03029	-.00219	.00018	.44299	-.00025	-.00108	.00076
200.460	1000.300	-.05061	.07296	-.01102	-.03049	-.00215	.00018	.44223	-.00100	-.00171	-.00039
	GRADIENT	.00000	.00000	.00000	.00000	.00000	.00000	.00000	.00000	.00000	.00000

RUN NO. 764/ 0 GRADIENT INTERVAL = -5.00/ 5.00

DLT-X	DLT-Z	CN	CA	CLM	CY	CYN	CBL	XCP/L	CPB1	CPB2	CPBC
400.370	750.190	-.05081	.06904	-.01101	-.02992	-.00227	.00016	.44331	-.00473	-.00509	-.00431
400.440	800.330	-.05094	.07073	-.01103	-.03039	-.00221	.00020	.44357	-.00499	-.00527	-.00495
400.450	900.390	-.05138	.07272	-.01104	-.03063	-.00215	.00019	.44523	-.00421	-.00451	-.00423
400.440	1000.300	-.05156	.07369	-.01110	-.03060	-.00214	.00019	.44478	-.00299	-.00335	-.00282
	GRADIENT	.00000	.00000	.00000	.00000	.00000	.00000	.00000	.00000	.00000	.00000

AEDC VA422(IA17) ORB AND ET SEPARATING(ORB DATA) (RTR349) (24 JUL 75)

REFERENCE DATA

SREF = 2890.0000 SQ.FT. XMRP = 1089.6000 IN. XO
LREF = 1290.3000 IN. YMRP = .0000 IN. YO
BREF = 1290.3000 IN. ZMRP = 375.0000 IN. ZO
SCALE = .0100

PARAMETRIC DATA

DLT-Y = 60.000 ALPHA = .000
BETA = 3.000 DLTALF = .000
DLTBTA = 3.000 MACH = 7.980
AILRON = .000 ELEVON = .000
GRID = 17.000 PO = 420.000

RUN NO. 774/ 0 GRADIENT INTERVAL = -5.00/ 5.00

DLT-X	DLT-Z	CN	CA	CLM	CY	CYN	CBL	XCP/L	CPB1	CPB2	CPBC
.571	18.300	-.01331	.07751	-.01282	-.03923	-.00207	-.00234	-.30289	-.01204	-.01200	-.01164
.530	99.726	.00192	.08824	-.00098	-.03930	-.00033	-.00200	.00000	-.01187	-.01186	-.01149
.493	201.610	.02670	.08131	-.00392	-.03120	-.00195	-.00265	.80698	-.01173	-.01173	-.01133
.579	302.360	.02063	.07654	-.01568	-.02637	-.00277	.00269	1.41980	-.01161	-.01161	-.01118
.605	400.470	-.03231	.07284	-.01466	-.03017	-.00220	.00080	.20630	-.01148	-.01149	-.01103
.647	500.150	-.05215	.07365	-.01121	-.03098	-.00214	.00022	.44502	-.01137	-.01139	-.01091
	GRADIENT	.00000	.00000	.00000	.00000	.00000	.00000	.00000	.00000	.00000	.00000

RUN NO. 775/ 0 GRADIENT INTERVAL = -5.00/ 5.00

DLT-X	DLT-Z	CN	CA	CLM	CY	CYN	CBL	XCP/L	CPB1	CPB2	CPBC
200.490	23.757	.01144	.08752	.00310	-.03735	-.00053	-.00244	.38852	-.01268	-.01259	-.01241
200.520	99.294	.01794	.08086	.00199	-.03587	-.00107	-.00312	.54901	-.01294	-.01282	-.01267
200.530	199.140	.03685	.08055	-.00971	-.02818	-.00245	-.00063	.92357	-.01295	-.01285	-.01257
200.580	297.630	-.00234	.07364	-.01654	-.02939	-.00219	.00191	.00000	-.01293	-.01282	-.01250
200.560	398.620	-.04516	.07312	-.01304	-.03050	-.00220	.00042	.37114	-.01292	-.01282	-.01248
200.570	500.000	-.05345	.07405	-.01110	-.03095	-.00212	.00021	.45237	-.01290	-.01281	-.01245
	GRADIENT	.00000	.00000	.00000	.00000	.00000	.00000	.00000	.00000	.00000	.00000

AEDC VA422(IA17) ORB AND ET SEPARATING(ORB DATA) (RTR350) (24 JUL 75)

REFERENCE DATA

SREF = 2690.0000 SQ.FT. XMRP = 1089.8000 IN. XO
LREF = 1290.3000 IN. YMRP = .0000 IN. YO
BREF = 1290.3000 IN. ZMRP = 375.0000 IN. ZO
SCALE = .0100

PARAMETRIC DATA

DLT-Y = 80.000 ALPHA = .000
BETA = 3.000 DLTALF = -10.000
DLTBTA = 3.000 MACH = 7.980
AILRON = .000 ELEVON = .000
GRID = 17.000 PO = 420.000

RUN NO. 771/ 0 GRADIENT INTERVAL = -5.00/ 5.00

DLT-X	DLT-Z	CN	CA	CLM	CY	CYN	CBL	XCP/L	CPB1	CPB2	CPBC
.489	404.070	.11713	.07604	-.03067	-.02360	-.00334	.00335	.92189	-.00980	-.00991	-.00974
.455	501.260	-.00583	.07150	-.01829	-.02921	-.00227	.00155	-2.47800	-.00966	-.00980	-.00972
.440	600.080	-.04926	.07281	-.01199	-.03068	-.00216	.00027	.41666	-.00938	-.00954	-.00948
.453	750.000	-.05287	.07409	-.01113	-.03076	-.00211	.00021	.44943	-.00843	-.00868	-.00851
.099	802.240	-.05262	.07406	-.01113	-.03083	-.00212	.00020	.44848	-.00788	-.00818	-.00789
	GRADIENT	.00000	.00000	.00000	.00000	.00000	.00000	.00000	.00000	.00000	.00000

RUN NO. 772/ 0 GRADIENT INTERVAL = -5.00/ 5.00

DLT-X	DLT-Z	CN	CA	CLM	CY	CYN	CBL	XCP/L	CPB1	CPB2	CPBC
200.570	398.120	.05020	.07092	-.02394	-.02763	-.00240	.00388	1.13680	-.00973	-.00990	-.00940
200.520	497.550	-.02918	.07167	-.01613	-.02997	-.00229	.00069	.10701	-.00912	-.00941	-.00856
200.470	599.820	-.05164	.07339	-.01107	-.03080	-.00215	.00020	.44573	-.00897	-.00925	-.00848
200.510	750.100	-.05258	.07404	-.01114	-.03083	-.00211	.00020	.44810	-.00946	-.00958	-.00918
200.510	800.210	-.05282	.07422	-.01111	-.03076	-.00211	.00021	.44968	-.00985	-.01001	-.00963
	GRADIENT	.00000	.00000	.00000	.00000	.00000	.00000	.00000	.00000	.00000	.00000

RUN NO. 773/ 0 GRADIENT INTERVAL = -5.00/ 5.00

DLT-X	DLT-Z	CN	CA	CLM	CY	CYN	CBL	XCP/L	CPB1	CPB2	CPBC
400.490	401.660	.00078	.07062	-.01979	-.02905	-.00228	.00145	.00000	-.01178	-.01182	-.01160
400.500	500.000	-.04850	.07265	-.01221	-.03052	-.00217	.00028	.40826	-.01171	-.01176	-.01165
400.520	600.150	-.05322	.07404	-.01114	-.03074	-.00209	.00021	.45068	-.01151	-.01156	-.01146
400.560	750.100	-.05343	.07439	-.01114	-.03076	-.00209	.00021	.45145	-.01101	-.01109	-.01093
400.620	800.170	-.05341	.07437	-.01114	-.03080	-.00208	.00021	.45141	-.01073	-.01082	-.01062
	GRADIENT	.00000	.00000	.00000	.00000	.00000	.00000	.00000	.00000	.00000	.00000

AEDC VA422(IA17) ORB AND ET SEPARATING(ORB DATA) (RTR352) (24 JUL 75)

REFERENCE DATA

SREF = 2690.0000 SQ.FT. XMRP = 1089.6000 IN. XO
LREF = 1290.3000 IN. YMRP = .0000 IN. YO
BREF = 1290.3000 IN. ZMRP = 375.0000 IN. ZO
SCALE = .0100

PARAMETRIC DATA

DLT-Y = 60.000 ALPHA = .000
BETA = 3.000 DLTALF = -20.000
DLTBTA = 3.000 MACH = 7.980
AILRON = .000 ELEVON = .000
GRID = 17.000 PO = 420.000

RUN NO. 770/ 0 GRADIENT INTERVAL = -5.00/ 5.00

DLT-X	DLT-Z	CN	CA	CLM	CY	CYN	CBL	XCP/L	CPB1	CPB2	CPBC
.508	802.180	.05522	.06546	-.03389	-.02766	-.00207	.00122	1.27360	-.00698	-.00739	-.00656
.492	900.380	-.04068	.06955	-.01432	-.03050	-.00224	.00034	.30791	-.00751	-.00776	-.00734
.503	1000.300	-.05126	.07235	-.01104	-.03075	-.00218	.00019	.44460	-.00750	-.00772	-.00741
	GRADIENT	.00000	.00000	.00000	.00000	.00000	.00000	.00000	.00000	.00000	.00000

RUN NO. 768/ 0 GRADIENT INTERVAL = -5.00/ 5.00

DLT-X	DLT-Z	CN	CA	CLM	CY	CYN	CBL	XCP/L	CPB1	CPB2	CPBC
200.530	751.170	.02753	.06289	-.03105	-.02844	-.00224	.00083	1.78790	-.00724	-.00786	-.00637
200.550	800.480	-.03325	.06771	-.01604	-.03019	-.00224	.00040	.17768	-.00841	-.00887	-.00802
200.560	900.260	-.05089	.07141	-.01100	-.03067	-.00220	.00019	.44394	-.00868	-.00909	-.00860
200.460	1000.300	-.05105	.07303	-.01102	-.03073	-.00214	.00019	.44420	-.00837	-.00878	-.00830
	GRADIENT	.00000	.00000	.00000	.00000	.00000	.00000	.00000	.00000	.00000	.00000

RUN NO. 769/ 0 GRADIENT INTERVAL = -5.00/ 5.00

DLT-X	DLT-Z	CN	CA	CLM	CY	CYN	CBL	XCP/L	CPB1	CPB2	CPBC
400.410	749.110	-.05018	.06881	-.01106	-.03020	-.00230	.00021	.43950	-.00298	-.00391	-.00103
400.590	800.430	-.05047	.07031	-.01095	-.03047	-.00223	.00019	.44302	-.00148	-.00229	.00050
400.560	900.380	-.05039	.07183	-.01095	-.03060	-.00217	.00019	.44268	-.00113	-.00181	.00042
400.470	1000.200	-.05074	.07327	-.01102	-.03079	-.00215	.00018	.44282	-.00186	-.00243	-.00082
	GRADIENT	.00000	.00000	.00000	.00000	.00000	.00000	.00000	.00000	.00000	.00000

AEDC VA422(IA17) ORB AND ET SEPARATING(ORB DATA) (RTR353) (24 JUL 75)

REFERENCE DATA

SREF = 2690.0000 SQ.FT. XMRP = 1089.6000 IN. XO
LREF = 1290.3000 IN. YMRP = .0000 IN. YO
BREF = 1290.3000 IN. ZMRP = 375.0000 IN. ZO
SCALE = .0100

PARAMETRIC DATA

DLT-Y = 60.000 ALPHA = 5.000
BETA = 3.000 DLTALF = .000
DLTBTA = .000 MACH = 7.990
AILRON = .000 ELEVON = .000
GRID = 25.000 PO = 420.000

RUN NO. 810/ 0 GRADIENT INTERVAL = -5.00/ 5.00

DLT-X	DLT-Z	CN	CA	CLM	CY	CYN	CBL	XCP/L	CPB1	CPB2	CPBC
.650	20.148	.02651	.05963	-.01341	-.03241	-.00200	-.00263	1.16580	-.01364	-.01363	-.01328
.648	102.130	.04139	.07492	-.00074	-.03358	-.00125	-.00332	.87788	-.01351	-.01355	-.01309
.708	202.200	.07861	.07193	.00725	-.03551	-.00053	-.00489	.56773	-.01348	-.01357	-.01310
.641	300.400	.12090	.07194	-.00495	-.02608	-.00237	-.00402	.70093	-.01357	-.01366	-.01323
.693	398.340	.11449	.06681	-.01638	-.02181	-.00342	.00417	.80304	-.01371	-.01379	-.01335
.696	497.830	.05229	.06271	-.01192	-.02564	-.00266	.00027	.88788	-.01378	-.01383	-.01338
	GRADIENT	.00000	.00000	.00000	.00000	.00000	.00000	.00000	.00000	.00000	.00000

RUN NO. 809/ 0 GRADIENT INTERVAL = -5.00/ 5.00

DLT-X	DLT-Z	CN	CA	CLM	CY	CYN	CBL	XCP/L	CPB1	CPB2	CPBC
200.610	18.932	.04541	.07387	.00172	-.03267	-.00043	-.00382	.62222	-.01310	-.01308	-.01268
200.560	99.465	.06742	.07074	.00881	-.03480	-.00034	-.00404	.52933	-.01301	-.01299	-.01261
200.570	200.960	.11107	.07203	.00114	-.02993	-.00144	-.00541	.64975	-.01291	-.01291	-.01253
200.570	302.450	.12746	.07000	-.01374	-.01986	-.00384	.00150	.76782	-.01276	-.01278	-.01236
200.610	401.020	.07530	.06256	-.01466	-.02488	-.00271	.00187	.85472	-.01273	-.01274	-.01234
200.600	500.020	.03427	.06340	-.00834	-.02621	-.00260	-.00070	.90342	-.01278	-.01279	-.01246
	GRADIENT	.00000	.00000	.00000	.00000	.00000	.00000	.00000	.00000	.00000	.00000

AEDC VA422(IA17) ORB AND ET SEPARATING(ORB DATA) (RTR354) (24 JUL 75)

REFERENCE DATA

SREF = 2690.0000 SQ.FT. XMRP = 1089.6000 IN. XO
LREF = 1290.3000 IN. YMRP = .0000 IN. YO
BREF = 1290.3000 IN. ZMRP = 375.0000 IN. ZO
SCALE = .0100

PARAMETRIC DATA

DLT-Y = 60.000 ALPHA = 5.000
BETA = 3.000 DLTALF = -10.000
DLTBTA = .000 MACH = 7.980
AILRON = .000 ELEVON = .000
GRID = 25.000 PO = 420.000

RUN NO. 818/ 0 GRADIENT INTERVAL = -5.00/ 5.00

DLT-X	DLT-Z	CN	CA	CLM	CY	CYN	CBL	XCP/L	CPB1	CPB2	CPBC
.627	401.800	.18132	.07253	-.00784	-.02357	-.00242	-.00341	.70322	-.01209	-.01228	-.01128
.621	497.370	.15468	.06932	-.02085	-.01762	-.00429	.00535	.79482	-.01212	-.01231	-.01132
.601	597.250	.07348	.06158	-.01538	-.02482	-.00278	.00183	.86908	-.01226	-.01241	-.01149
	GRADIENT	.00000	.00000	.00000	.00000	.00000	.00000	.00000	.00000	.00000	.00000

AEDC VA422(IA17) ORB AND ET SEPARATING(ORB DATA) (RTR354) (24 JUL 75)

REFERENCE DATA

SREF = 2690.0000 SQ.FT. XMRP = 1089.8000 IN. XO
LREF = 1290.3000 IN. YMRP = .0000 IN. YO
BREF = 1290.3000 IN. ZMRP = 375.0000 IN. ZO
SCALE = .0100

PARAMETRIC DATA

DLT-Y = 80.000 ALPHA = 5.000
BETA = 3.000 DLTALF = -10.000
DLTBTA = .000 MACH = 7.980
AILRON = .000 ELEVON = .000
GRID = 25.000 PO = 420.000

RUN NO. 817/ 0 GRADIENT INTERVAL = -5.00/ 5.00

DLT-X	DLT-Z	CN	CA	CLM	CY	CYN	CBL	XCP/L	CPB1	CPB2	CPBC
200.490	403.290	.17429	.07052	-.01806	-.01779	-.00396	.00256	.76363	-.01211	-.01227	-.01125
200.530	501.780	.10428	.06167	-.01933	-.02357	-.00289	.00421	.84536	-.01218	-.01234	-.01128
200.460	600.120	.03961	.06217	-.00958	-.02567	-.00270	-.00054	.90200	-.01234	-.01245	-.01147
	GRADIENT	.00000	.00000	.00000	.00000	.00000	.00000	.00000	.00000	.00000	.00000

RUN NO. 816/ 0 GRADIENT INTERVAL = -5.00/ 5.00

DLT-X	DLT-Z	CN	CA	CLM	CY	CYN	CBL	XCP/L	CPB1	CPB2	CPBC
400.530	400.060	.14164	.06285	-.02245	-.02255	-.00297	.00610	.81648	-.01250	-.01259	-.01162
400.640	497.750	.05773	.06147	-.01295	-.02532	-.00270	.00018	.88438	-.01248	-.01257	-.01161
400.510	599.600	.03210	.06364	-.00735	-.02650	-.00254	-.00072	.88890	-.01242	-.01251	-.01154
	GRADIENT	.00000	.00000	.00000	.00000	.00000	.00000	.00000	.00000	.00000	.00000

AEDC VA422(IA17) ORB AND ET SEPARATING(ORB DATA) (RTR356) (24 JUL 75)

REFERENCE DATA

SREF = 2690.0000 SQ.FT. XMRP = 1089.8000 IN. XO
LREF = 1290.3000 IN. YMRP = .0000 IN. YO
BREF = 1290.3000 IN. ZMRP = 375.0000 IN. ZO
SCALE = .0100

PARAMETRIC DATA

DLT-Y = 80.000 ALPHA = 5.000
BETA = 3.000 DLTALF = -20.000
DLTBTA = .000 MACH = 7.980
AILRON = .000 ELEVON = .000
GRID = 25.000 PO = 420.000

RUN NO. 827/ 0 GRADIENT INTERVAL = -5.00/ 5.00

DLT-X	DLT-Z	CN	CA	CLM	CY	CYN	CBL	XCP/L	CPB1	CPB2	CPBC
.422	800.200	.10029	.05698	-.02380	-.02330	-.00293	.00123	.89736	-.00116	-.00181	-.00134
.538	899.180	.03202	.06123	-.00712	-.02543	-.00270	-.00083	.88221	-.00211	-.00268	-.00226
.570	1000.300	.03172	.05999	-.00694	-.02561	-.0027[illegible]	-.00069	.87886	-.[illegible]039	-.00294	-.00233
	GRADIENT	.00000	.00000	.00000	.00000	.00000	.00000	.00000	.00000	.00000	.00000

RUN NO. 825/ 0 GRADIENT INTERVAL = -5.00/ 5.00

DLT-X	DLT-Z	CN	CA	CLM	CY	CYN	CBL	XCP/L	CPB1	CPB2	CPBC
200.400	750.410	.04908	.05932	-.01207	-.02462	-.00281	-.00027	.90601	-.00117	-.00193	-.00109
200.550	800.040	.03233	.06064	-.00709	-.02517	-.00276	-.00085	.87928	-.00152	-.00229	-.00150
200.500	900.310	.03248	.06024	-.00697	-.02565	-.00272	-.00069	.87457	-.00158	-.00233	-.00147
200.560	1000.200	.03162	.05992	-.00695	-.02552	-.00274	-.00070	.87994	-.00105	-.00184	-.00072
	GRADIENT	.00000	.00000	.00000	.00000	.00000	.00000	.00000	.00000	.00000	.00000

AEDC VA422(1A17) ORB AND ET SEPARATING(ORB DATA) (RTR356) (24 JUL 75)

REFERENCE DATA

SREF = 2690.0000 SQ.FT. XMRP = 1089.6000 IN. XO
LREF = 1290.3000 IN. YMRP = .0000 IN. YO
BREF = 1290.3000 IN. ZMRP = 375.0000 IN. ZO
SCALE = .0100

PARAMETRIC DATA

DLT-Y = 60.000 ALPHA = 5.000
BETA = 3.000 DLTALF = -20.000
DLTBTA = .000 MACH = 7.980
AILRON = .000 ELEVON = .000
GRID = 25.000 PO = 420.000

RUN NO. 824/ 0 GRADIENT INTERVAL = -5.00/ 5.00

DLT-X	DLT-Z	CN	CA	CLM	CY	CYN	CBL	XCP/L	CPB1	CPB2	CPBC
400.560	750.280	.03306	.06213	-.00717	-.02614	-.00258	-.00075	.87694	.00076	-.00029	.00117
400.480	800.390	.03189	.06049	-.00701	-.02575	-.00270	-.00068	.87980	.00076	-.00034	.00137
400.530	900.210	.03074	.06014	-.00695	-.02558	-.00274	-.00069	.88605	.00017	-.00091	.00086
400.600	1000.200	.03054	.06034	-.00700	-.02566	-.00274	-.00068	.88925	-.00054	-.00160	.00011
	GRADIENT	.00000	.00000	.00000	.00000	.00000	.00000	.00000	.00000	.00000	.00000

AEDC VA422(1A17) ORB AND ET SEPARATING(ORB DATA) (RTR357) (24 JUL 75)

REFERENCE DATA

SREF = 2690.0000 SQ.FT. XMRP = 1089.6000 IN. XO
LREF = 1290.3000 IN. YMRP = .0000 IN. YO
BREF = 1290.3000 IN. ZMRP = 375.0000 IN. ZO
SCALE = .0100

PARAMETRIC DATA

DLT-Y = 60.000 ALPHA = 5.000
BETA = 3.000 DLTALF = .000
DLTBTA = 3.000 MACH = 7.980
AILRON = .000 ELEVON = .000
GRID = 25.000 PO = 420.000

RUN NO. 834/ 0 GRADIENT INTERVAL = -5.00/ 5.00

DLT-X	DLT-Z	CN	CA	CLM	CY	CYN	CBL	XCP/L	CPB1	CPB2	CPBC
.540	18.446	.02880	.05739	-.01371	-.03198	-.00199	-.00372	1.13600	-.01304	-.01296	-.01268
.584	97.336	.03709	.07425	-.00262	-.03369	-.00238	-.00386	.73071	-.01280	-.01271	-.01241
.713	199.290	.07702	.07172	.00861	-.03651	-.00103	-.00524	.54824	-.01260	-.01251	-.01219
.703	301.660	.12751	.07446	-.00426	-.02997	-.00180	-.00458	.69338	-.01240	-.01232	-.01195
.647	402.510	.12481	.06604	-.01678	-.02367	-.00291	.00219	.79444	-.01227	-.01221	-.01182
1.035	498.220	.05604	.06262	-.01234	-.02583	-.00257	.00005	.88017	-.01214	-.01210	-.01174
	GRADIENT	.00000	.00000	.00000	.00000	.00000	.00000	.00000	.00000	.00000	.00000

RUN NO. 835/ 0 GRADIENT INTERVAL = -5.00/ 5.00

DLT-X	DLT-Z	CN	CA	CLM	CY	CYN	CBL	XCP/L	CPB1	CPB2	CPBC
200.540	23.322	.04980	.07267	.00029	-.03232	-.00158	-.00404	.65426	-.01295	-.01302	-.01253
200.610	101.050	.06608	.07065	.00891	-.03571	-.00138	-.00457	.52524	-.01304	-.01313	-.01270
200.530	200.630	.10933	.07325	.00262	-.03302	-.00124	-.00517	.63601	-.01322	-.01333	-.01291
200.640	299.530	.14151	.06995	-.01325	-.02212	-.00345	-.00068	.75367	-.01325	-.01337	-.01288
200.640	397.150	.08257	.06280	-.01538	-.02542	-.00255	.00098	.84626	-.01323	-.01333	-.01281
200.850	498.760	.03611	.06322	-.00915	-.02609	-.00260	-.00063	.91340	-.01325	-.01332	-.01280
	GRADIENT	.00000	.00000	.00000	.00000	.00000	.00000	.00000	.00000	.00000	.00000

AEDC VA422(IA17) ORB AND ET SEPARATING(ORB DATA) (RTR358) (24 JUL 75)

REFERENCE DATA

SREF = 2890.0000 SQ.FT. XMRP = 1089.6000 IN. XO
LREF = 1290.3000 IN. YMRP = .0000 IN. YO
BREF = 1290.3000 IN. ZMRP = 375.0000 IN. ZO
SCALE = .0100

PARAMETRIC DATA

DLT-Y = 80.000 ALPHA = 5.000
BETA = 3.000 DLTALF = -10.000
DLTBTA = 3.000 MACH = 7.980
AILRON = .000 ELEVON = .000
GRID = 25.000 PO = 420.000

RUN NO. 831/ 0 GRADIENT INTERVAL = -5.00/ 5.00

DLT-X	DLT-Z	CN	CA	CLM	CY	CYN	CBL	XCP/L	CPB1	CPB2	CPBC
.483	402.890	.19050	.07488	-.00731	-.02869	-.00173	-.00538	.69838	-.00775	-.00804	-.00797
.500	503.230	.16870	.06753	-.02240	-.02039	-.00362	.00437	.79280	-.00707	-.00744	-.00728
-.357	604.190	.07154	.06120	-.01492	-.02505	-.00265	.00089	.86859	-.00545	-.00690	-.00658
	GRADIENT	.00000	.00000	.00000	.00000	.00000	.00000	.00000	.00000	.00000	.00000

RUN NO. 832/ 0 GRADIENT INTERVAL = -5.00/ 5.00

DLT-X	DLT-Z	CN	CA	CLM	CY	CYN	CBL	XCP/L	CPB1	CPB2	CPBC
200.520	398.790	.18652	.07132	-.01797	-.01946	-.00379	.00033	.75635	-.00902	-.00917	-.00915
200.490	496.520	.11139	.06205	-.02029	-.02444	-.00270	.00300	.84217	-.00944	-.00958	-.00953
200.690	598.220	.04174	.06235	-.01040	-.02579	-.00265	-.00047	.90918	-.00980	-.00991	-.00984
	GRADIENT	.00000	.00000	.00000	.00000	.00000	.00000	.00000	.00000	.00000	.00000

RUN NO. 833/ 0 GRADIENT INTERVAL = -5.00/ 5.00

DLT-X	DLT-Z	CN	CA	CLM	CY	CYN	CBL	XCP/L	CPB1	CPB2	CPBC
400.480	402.620	.14534	.06292	-.02309	-.02404	-.00266	.00350	.81887	-.01033	-.01052	-.01012
400.620	500.670	.06042	.06148	-.01352	-.02539	-.00266	.00003	.88374	-.01022	-.01039	-.01005
400.690	599.960	.03168	.06356	-.00742	-.02648	-.00253	-.00072	.89420	-.01011	-.01027	-.00996
	GRADIENT	.00000	.00000	.00000	.00000	.00000	.00000	.00000	.00000	.00000	.00000

ORIGINAL PAGE IS OF POOR QUALITY

AEDC VA4E2(IA17) ORB AND ET SEPARATING(ORB DATA) (RTR360) (24 JUL 75)

REFERENCE DATA

SREF = 2690.0000 SQ.FT. XMRP = 1089.6000 IN. XO
LREF = 1290.3000 IN. YMRP = .0000 IN. YO
BREF = 1290.3000 IN. ZMRP = 375.0000 IN. ZO
SCALE = .0100

PARAMETRIC DATA

DLT-Y = 60.000 ALPHA = 5.000
BETA = 3.000 DLTALF = -20.000
DLTBTA = 3.000 MACH = 7.980
AILRON = .000 ELEVON = .000
GRID = 25.000 PO = 420.000

RUN NO. 830/ 0 GRADIENT INTERVAL = -5.00/ 5.00

DLT-X	DLT-Z	CN	CA	CLM	CY	CYN	CBL	XCP/L	CPB1	CPB2	CPBC
.536	801.440	.11510	.05608	-.02783	-.02498	-.00246	.00012	.90177	.00037	-.00071	.00037
.558	900.230	.03260	.06007	-.00707	-.02566	-.00278	-.00070	.87677	.00045	-.00072	.00042
.472	1000.200	.03275	.06101	-.00707	-.02599	-.00265	-.00071	.87600	.00072	-.00038	.00074
	GRADIENT	.00000	.00000	.00000	.00000	.00000	.00000	.00000	.00000	.00000	.00000

RUN NO. 828/ 0 GRADIENT INTERVAL = -5.00/ 5.00

DLT-X	DLT-Z	CN	CA	CLM	CY	CYN	CBL	XCP/L	CPB1	CPB2	CPBC
200.490	750.500	.05581	.05818	-.01398	-.02547	-.00275	-.00021	.91139	.00072	-.00020	.00094
200.530	800.190	.03298	.05981	-.00724	-.02531	-.00285	-.00070	.87943	.00063	-.00029	.00084
200.420	900.240	.03261	.06089	-.00707	-.02604	-.00267	-.00070	.87694	.00077	-.00006	.00105
200.450	1000.200	.03188	.06048	-.00702	-.02582	-.00271	-.00069	.88018	.00077	-.00004	.00113
	GRADIENT	.00000	.00000	.00000	.00000	.00000	.00000	.00000	.00000	.00000	.00000

RUN NO. 829/ 0 GRADIENT INTERVAL = -5.00/ 5.00

DLT-X	DLT-Z	CN	CA	CLM	CY	CYN	CBL	XCP/L	CPB1	CPB2	CPBC
400.560	750.050	.03278	.06007	-.00694	-.02578	-.00275	-.00071	.87155	-.00004	-.00092	.00013
400.500	800.270	.03307	.06025	-.00696	-.02594	-.00273	-.00070	.87063	.00021	-.00058	.00046
400.480	900.280	.03284	.06048	-.00791	-.02594	-.00270	-.00071	.87353	.00036	-.00062	.00057
400.520	1000.200	.03183	.06009	-.00695	-.02565	-.00275	-.00070	.87846	.00047	-.00058	.00069
	GRADIENT	.00000	.00000	.00000	.00000	.00000	.00000	.00000	.00000	.00000	.00000

AEDC VA422(IA17) ORB AND ET SEPARATING(ORB DATA) (RTR361) (24 JUL 75)

REFERENCE DATA

SREF = 2690.0000 SQ.FT. XMRP = 1089.6000 IN. XO
LREF = 1290.3000 IN. YMRP = .0000 IN. YO
BREF = 1290.3000 IN. ZMRP = 375.0000 IN. ZO
SCALE = .0100

PARAMETRIC DATA

DLT-Y = 60.000 ALPHA = -5.000
BETA = 3.000 DLTALF = .000
DLTBTA = .000 MACH = 7.980
AILRON = .000 ELEVON = .000
GRID = 18.000 PO = 420.000

RUN NO. 841/ 0 GRADIENT INTERVAL = -5.00/ 5.00

DLT-X	DLT-Z	CN	CA	CLM	CY	CYN	CBL	XCP/L	CPB1	CPB2	CPBC
.526	20.229	-.05922	.10224	-.00993	-.03592	-.00009	.00124	.49231	-.01314	-.01292	-.01231
.427	100.560	-.05247	.09641	-.00518	-.02836	-.00004	.00049	.56123	-.01340	-.01314	-.01251
.539	198.080	-.06919	.09132	-.01328	-.02766	-.00283	.00226	.46807	-.01285	-.01256	-.01166
.595	298.130	-.10560	.08654	-.01751	-.03445	-.00192	.00164	.49414	-.01266	-.01240	-.01150
.551	399.540	-.12801	.08645	-.01506	-.03530	-.00191	.00101	.54235	-.01251	-.01230	-.01143
.599	500.080	-.12984	.08695	-.01463	-.03545	-.00189	.00091	.54732	-.01245	-.01229	-.01144
	GRADIENT	.00000	.00000	.00000	.00000	.00000	.00000	.00000	.00000	.00000	.00000

RUN NO. 840/ 0 GRADIENT INTERVAL = -5.00/ 5.00

DLT-X	DLT-Z	CN	CA	CLM	CY	CYN	CBL	XCP/L	CPB1	CPB2	CPBC
200.450	23.093	-.02688	.09949	.00205	-.02705	.00134	.00036	.73643	-.01266	-.01262	-.01170
200.570	102.430	-.05051	.09320	-.00638	-.03116	-.00097	.00139	.53370	-.01289	-.01285	-.01208
200.520	202.220	-.07129	.08887	-.01633	-.03133	-.00233	.00345	.43090	-.01294	-.01285	-.01213
200.550	300.370	-.11421	.08633	-.01736	-.03489	-.00196	.00141	.50796	-.01296	-.01283	-.01214
200.530	400.120	-.13001	.08679	-.01469	-.03538	-.00189	.00094	.54699	-.01290	-.01274	-.01207
200.490	500.080	-.13023	.08711	-.01463	-.03562	-.00190	.00092	.54769	-.01283	-.01263	-.01194
	GRADIENT	.00000	.00000	.00000	.00000	.00000	.00000	.00000	.00000	.00000	.00000

AEDC VA422(IA17) ORB AND ET SEPARATING(ORB DATA) (RTR362) (24 JUL 75)

REFERENCE DATA

SREF = 2690.0000 SQ.FT. XMRP = 1089.6000 IN. XO
LREF = 1290.3000 IN. YMRP = .0000 IN. YO
BREF = 1290.3000 IN. ZMRP = 375.0000 IN. ZO
SCALE = .0100

PARAMETRIC DATA

DLT-Y = 60.000 ALPHA = -5.000
BETA = 3.000 DLTALF = -10.000
DLTBTA = .000 MACH = 7.980
AILRON = .000 ELEVON = .000
GRID = 18.000 PO = 420.000

RUN NO. 849/ 0 GRADIENT INTERVAL = -5.00/ 5.00

DLT-X	DLT-Z	CN	CA	CLM	CY	CYN	CBL	XCP/L	CPB1	CPB2	CPBC
.435	402.370	.02571	.08253	-.04185	-.02913	-.00289	.00663	2.27990	-.00537	-.00577	-.00410
.484	498.880	-.10412	.08217	-.02148	-.03429	-.00215	.00154	.45385	-.00557	-.00593	-.00450
.421	600.010	-.12804	.08558	-.01488	-.03511	-.00192	.00090	.54536	-.00536	-.00571	-.00423
	GRADIENT	.00000	.00000	.00000	.00000	.00000	.00000	.00000	.00000	.00000	.00000

AEDC VA422(IA17) ORB AND ET SEPARATING(ORB DATA) (RTR362) (24 JUL 75)

REFERENCE DATA

SREF = 2690.0000 SQ.FT. XMRP = 1089.6000 IN. XO
LREF = 1290.3000 IN. YMRP = .0000 IN. YO
BREF = 1290.3000 IN. ZMRP = 375.0000 IN. ZO
SCALE = .0100

PARAMETRIC DATA

DLT-Y = 60.000 ALPHA = -5.000
BETA = 3.000 DLTALF = -10.000
DLTBTA = .000 MACH = 7.980
AILRON = .000 ELEVON = .000
GRID = 18.000 PO = 420.000

RUN NO. 848/ 0 GRADIENT INTERVAL = -5.00/ 5.00

DLT-X	DLT-Z	CN	CA	CLM	CY	CYN	CBL	XCP/L	CPB1	CPB2	CPBC
200.470	401.820	-.06493	.08075	-.02720	-.03251	-.00233	.00261	.24107	-.00763	-.00785	-.00652
200.440	500.200	-.12260	.08358	-.01596	-.03485	-.00198	.00102	.52980	-.00819	-.00838	-.00749
200.500	600.180	-.12822	.08582	-.01457	-.03508	-.00191	.00090	.54639	-.00791	-.00808	-.00722
	GRADIENT	.00000	.00000	.00000	.00000	.00000	.00000	.00000	.00000	.00000	.00000

RUN NO. 847/ 0 GRADIENT INTERVAL = -5.00/ 5.00

DLT-X	DLT-Z	CN	CA	CLM	CY	CYN	CBL	XCP/L	CPB1	CPB2	CPBC
400.510	400.250	-.10251	.08324	-.01994	-.03425	-.00210	.00158	.46547	-.00730	-.00763	-.00607
400.410	499.520	-.12670	.08503	-.01472	-.03503	-.00197	.00093	.54380	-.00688	-.00720	-.00561
400.390	600.010	-.12762	.08617	-.01456	-.03516	-.00192	.00090	.54591	-.00683	-.00708	-.00569
	GRADIENT	.00000	.00000	.00000	.00000	.00000	.00000	.00000	.00000	.00000	.00000

AEDC VA422(IA17) ORB AND ET SEPARATING(ORB DATA) (RTR364) (24 JUL 75)

REFERENCE DATA

SREF = 2690.0000 SQ.FT. XMRP = 1089.6000 IN. XO
LREF = 1290.3000 IN. YMRP = .0000 IN. YO
BREF = 1290.3000 IN. ZMRP = 375.0000 IN. ZO
SCALE = .0100

PARAMETRIC DATA

DLT-Y = 60.000 ALPHA = -5.000
BETA = 3.000 DLTALF = -20.000
DLTBTA = .000 MACH = 7.980
AILRON = .000 ELEVON = .000
GRID = 18.000 PO = 370.000

RUN NO. 858/ 0 GRADIENT INTERVAL = -5.00/ 5.00

DLT-X	DLT-Z	CN	CA	CLM	CY	CYN	CBL	XCP/L	CPB1	CPB2	CPBC
.295	800.540	.07980	.08114	-.04563	-.02420	-.00199	.00995	1.23180	-.00150	-.00163	-.00098
.462	898.500	-.08075	.08241	-.02521	-.03288	-.00227	.00233	.34782	-.00173	-.00190	-.00114
.380	999.590	-.12733	.08598	-.01492	-.03495	-.00195	.00097	.54283	-.00160	-.00181	-.00083
	GRADIENT	.00000	.00000	.00000	.00000	.00000	.00000	.00000	.00000	.00000	.00000

RUN NO. 856/ 0 GRADIENT INTERVAL = -5.00/ 5.00

DLT-X	DLT-Z	CN	CA	CLM	CY	CYN	CBL	XCP/L	CPB1	CPB2	CPBC
200.490	753.360	.10754	.07275	-.05326	-.02352	-.00055	.00789	1.15520	.01238	.01167	.01474
200.140	799.680	.09500	.07323	-.04613	-.02319	-.00006	.00580	1.14560	.00621	.00788	.00916
200.660	895.740	-.12138	.08384	-.01635	-.03468	-.00200	.00122	.52534	.00624	.00779	.00901
200.510	1000.200	-.12850	.08627	-.01458	-.03508	-.00194	.00087	.54657	.00496	.00609	.00654
	GRADIENT	.00000	.00000	.00000	.00000	.00000	.00000	.00000	.00000	.00000	.00000

AEDC VA422(IA17) ORB AND ET SEPARATING(ORB DATA) (RTR364) (24 JUL 75)

REFERENCE DATA

SREF = 2690.0000 SQ.FT. XMRP = 1089.6000 IN. XO
LREF = 1290.3000 IN. YMRP = .0000 IN. YO
BREF = 1290.3000 IN. ZMRP = 375.0000 IN. ZO
SCALE = .0100

PARAMETRIC DATA

DLT-Y = 60.000 ALPHA = -5.000
BETA = 3.000 DLTALF = -20.000
DLTBTA = .000 MACH = 7.980
AILRON = .000 ELEVON = .000
GRID = 18.000 PO = 370.000

RUN NO. 855/ 0 GRADIENT INTERVAL = -5.00/ 5.00

DLT-X	DLT-Z	CN	CA	CLM	CY	CYN	CBL	XCP/L	CPB1	CPB2	CPBC
400.470	751.760	-.04015	.07311	-.02697	-.02785	-.00257	.00105	-.01164	.00676	.00546	.00923
400.350	800.920	-.09652	.07822	-.01899	-.03286	-.00235	.00093	.46330	.00270	.00197	.00396
400.430	900.410	-.12447	.08406	-.01533	-.03496	-.00194	.00085	.53686	.00249	.00185	.00310
400.330	1000.300	-.12821	.08662	-.01448	-.03511	-.00195	.00090	.54709	.00418	.00341	.00507
	GRADIENT	.00000	.00000	.00000	.00000	.00000	.00000	.00000	.00000	.00000	.00000

ORIGINAL PAGE IS OF POOR QUALITY

AEDC VA422(IA17) ORB AND ET SEPARATING(ORB DATA) (RTR365) (24 JUL 75)

REFERENCE DATA

SREF = 2690.0000 SQ.FT. XMRP = 1089.6000 IN. XO
LREF = 1290.3000 IN. YMRP = .0000 IN. YO
BREF = 1290.3000 IN. ZMRP = 375.0000 IN. ZO
SCALE = .0100

PARAMETRIC DATA

DLT-Y = 60.000 ALPHA = -5.000
BETA = 3.000 DLTALF = .000
DLTBTA = 3.000 MACH = 7.980
AILRON = .000 ELEVON = .000
GRID = 18.000 PO = 300.000

RUN NO. 865/ 0 GRADIENT INTERVAL = -5.00/ 5.00

DLT-X	DLT-Z	CN	CA	CLM	CY	CYN	CBL	XCP/L	CPB1	CPB2	CPBC
.489	19.669	-.05670	.10708	-.00947	-.04397	-.00073	-.00123	.49304	-.00889	-.00895	-.00885
.595	101.670	-.04103	.09858	-.00596	-.03364	-.00114	-.00025	.51475	-.00842	-.00865	-.00832
.561	201.810	-.06239	.09448	-.01343	-.02934	-.00291	.00167	.44468	-.00795	-.00824	-.00798
.538	300.690	-.10309	.08944	-.01762	-.03479	-.00196	.00146	.48908	-.00761	-.00789	-.00766
.502	400.100	-.12803	.08937	-.01519	-.03540	-.00194	.00102	.54134	-.00712	-.00741	-.00716
.495	500.070	-.13057	.08981	-.01450	-.03553	-.00195	.00093	.54891	-.00659	-.00690	-.00659
	GRADIENT	.00000	.00000	.00000	.00000	.00000	.00000	.00000	.00000	.00000	.00000

RUN NO. 866/ 0 GRADIENT INTERVAL = -5.00/ 5.00

DLT-X	DLT-Z	CN	CA	CLM	CY	CYN	CBL	XCP/L	CPB1	CPB2	CPBC
200.520	22.768	-.01945	.10515	.00171	-.03438	.00009	-.00132	.74808	-.01077	-.01049	-.01058
200.480	97.990	-.04608	.09602	-.00540	-.03497	-.00100	.00040	.54279	-.01103	-.01072	-.01053
200.490	198.460	-.06702	.09163	-.01566	-.03229	-.00222	.00286	.42633	-.01052	-.01023	-.00976
200.470	298.490	-.11184	.08912	-.01757	-.03521	-.00199	.00136	.50288	-.01054	-.01027	-.00982
200.510	399.830	-.13035	.08950	-.01464	-.03544	-.00196	.00097	.54765	-.01058	-.01035	-.00989
200.490	500.090	-.13073	.08994	-.01444	-.03557	-.00192	.00093	.54953	-.01061	-.01044	-.00996
	GRADIENT	.00000	.00000	.00000	.00000	.00000	.00000	.00000	.00000	.00000	.00000

AEDC VA422(IA17) ORB AND ET SEPARATING(ORB DATA) (RTR366) (24 JUL 75)

REFERENCE DATA

SREF = 2690.0000 SQ.FT. XMRP = 1089.6000 IN. XO
LREF = 1290.3000 IN. YMRP = .0000 IN. YO
BREF = 1290.3000 IN. ZMRP = 375.0000 IN. ZO
SCALE = .0100

PARAMETRIC DATA

DLT-Y = 60.000 ALPHA = -5.000
BETA = 3.000 DLTALF = -10.000
DLTBTA = 3.000 MACH = 7.980
AILRON = .000 ELEVON = .000
GRID = 18.000 PO = 300.000

RUN NO. 862/ 0 GRADIENT INTERVAL = -5.00/ 5.00

DLT-X	DLT-Z	CN	CA	CLM	CY	CYN	CBL	XCP/L	CPB1	CPB2	CPBC
.505	403.300	.05603	.08499	-.04435	-.03334	-.00191	.00116	1.45150	-.00150	-.00196	-.00093
.449	500.520	-.10514	.08504	-.02045	-.03509	-.00213	.00110	.46550	-.00131	-.00183	-.00085
.253	601.430	-.12864	.08795	-.01455	-.03553	-.00201	.00092	.54691	-.00090	-.00147	-.00040
	GRADIENT	.00000	.00000	.00000	.00000	.00000	.00000	.00000	.00000	.00000	.00000

RUN NO. 863/ 0 GRADIENT INTERVAL = -5.00/ 5.00

DLT-X	DLT-Z	CN	CA	CLM	CY	CYN	CBL	XCP/L	CPB1	CPB2	CPBC
200.480	398.300	-.05091	.08237	-.03043	-.03378	-.00219	.00159	.06227	-.00258	-.00299	-.00216
200.490	499.040	-.12245	.08576	-.01621	-.03513	-.00203	.00099	.52763	-.00213	-.00269	-.00134
200.460	600.210	-.12930	.08843	-.01449	-.03535	-.00200	.00092	.54796	-.00143	-.00215	-.00054
	GRADIENT	.00000	.00000	.00000	.00000	.00000	.00000	.00000	.00000	.00000	.00000

RUN NO. 864/ 0 GRADIENT INTERVAL = -5.00/ 5.00

DLT-X	DLT-Z	CN	CA	CLM	CY	CYN	CBL	XCP/L	CPB1	CPB2	CPBC
400.490	400.870	-.10003	.08519	-.02040	-.03446	-.00213	.00142	.45602	-.00325	-.00374	-.00274
400.360	500.310	-.12769	.08652	-.01487	-.03539	-.00200	.00094	.54353	-.00319	-.00371	-.00292
400.540	600.040	-.12917	.08879	-.01444	-.03551	-.00200	.00093	.54823	-.00248	-.00305	-.00213
	GRADIENT	.00000	.00000	.00000	.00000	.00000	.00000	.00000	.00000	.00000	.00000

AEDC VA422(IA17) ORB AND ET SEPARATING(ORB DATA) (RTR368) (24 JUL 75)

REFERENCE DATA

SREF = 2690.0000 SQ.FT. XMRP = 1089.6000 IN. XO
LREF = 1290.3000 IN. YMRP = .0000 IN. YO
BREF = 1290.3000 IN. ZMRP = 375.0000 IN. ZO
SCALE = .0100

PARAMETRIC DATA

DLT-Y = 60.000 ALPHA = -5.000
BETA = 3.000 DLTALF = -20.000
DLTBTA = 3.000 MACH = 7.980
AILRON = .000 ELEVON = .000
GRID = 18.000 PO = 350.000

RUN NO. 859/ 0 GRADIENT INTERVAL = -5.00/ 5.00

DLT-X	DLT-Z	CN	CA	CLM	CY	CYN	CBL	XCP/L	CPB1	CPB2	CPBC
200.420	753.190	.13136	.07162	-.05553	-.02876	.00101	.00023	1.08270	-.00051	-.00110	.00106
200.310	802.820	.02593	.07439	-.04410	-.03058	-.00157	.00168	2.36070	-.00195	-.00227	-.00068
200.410	900.340	-.12260	.08341	-.01567	-.03504	-.00199	.00091	.53223	-.00299	-.00310	-.00216
200.540	1000.300	-.12731	.08560	-.01456	-.03529	-.00198	.00088	.54560	-.00306	-.00314	-.00234
	GRADIENT	.00000	.00000	.00000	.00000	.00000	.00000	.00000	.00000	.00000	.00000

AEDC VA422(IA17) ORB AND ET SEPARATING(ORB DATA) (RTR369) (24 JUL 75)

REFERENCE DATA

SREF = 2690.0000 SQ.FT. XMRP = 1089.6000 IN. XO
LREF = 1290.3000 IN. YMRP = .0000 IN. YO
BREF = 1290.3000 IN. ZMRP = 375.0000 IN. ZO
SCALE = .0100

PARAMETRIC DATA

DLT-Y = 60.000 ALPHA = -5.000
BETA = 3.000 DLTALF = -20.000
DLTBTA = 3.000 MACH = 7.980
AILRON = .000 ELEVON = .000
GRID = 18.000 PO = 300.000

RUN NO. 861/ 0 GRADIENT INTERVAL = -5.00/ 5.00

DLT-X	DLT-Z	CN	CA	CLM	CY	CYN	CBL	XCP/L	CPB1	CPB2	CPBC
.453	803.550	.07694	.08148	-.04505	-.02818	-.00069	.00450	1.24560	.00267	.00260	.00222
.473	901.030	-.07504	.08281	-.02663	-.03426	-.00218	.00156	.30508	.00303	.00310	.00234
.456	1000.400	-.12765	.08667	-.01490	-.03527	-.00204	.00096	.54326	.00364	.00372	.00268
	GRADIENT	.00000	.00000	.00000	.00000	.00000	.00000	.00000	.00000	.00000	.00000

RUN NO. 860/ 0 GRADIENT INTERVAL = -5.00/ 5.00

DLT-X	DLT-Z	CN	CA	CLM	CY	CYN	CBL	XCP/L	CPB1	CPB2	CPBC
400.410	747.080	-.02407	.07070	-.03058	-.03198	-.00114	.00183	-.61026	.00370	.00270	.00689
399.710	799.460	-.01360	.07038	-.02859	-.03065	-.00029	.00139	-1.44210	.03247	.03198	.03457
400.490	898.290	-.12581	.08484	-.01529	-.03532	-.00200	.00087	.53846	.03069	.03036	.03178
400.340	1000.400	-.12925	.08771	-.01450	-.03533	-.00201	.00093	.54783	.02163	.02159	.02070
	GRADIENT	.00000	.00000	.00000	.00000	.00000	.00000	.00000	.00000	.00000	.00000

ORIGINAL PAGE IS OF POOR QUALITY

AEDC VA422(IA17) ORB AND ET SEPARATING(ORB DATA) (RTR370) (24 JUL 75)

REFERENCE DATA

SREF = 2690.0000 SQ.FT. XMRP = 1089.6000 IN. XO
LREF = 1290.3000 IN. YMRP = .0000 IN. YO
BREF = 1290.3000 IN. ZMRP = 375.0000 IN. ZO
SCALE = .0100

PARAMETRIC DATA

DLT-Y = 60.000 ALPHA = -10.000
BETA = 3.000 DLTALF = .000
DLTBTA = .000 MACH = 7.980
AILRON = .000 ELEVON = .000
GRID = 8.000 PO = 300.000

RUN NO. 925/ 0 GRADIENT INTERVAL = -5.00/ 5.00

DLT-X	DLT-Z	CN	CA	CLM	CY	CYN	CBL	XCP/L	CPB1	CPB2	CPBC
.472	29.200	-.09830	.12519	-.00700	-.02902	.00228	.00314	.59883	-.00709	-.00672	-.00596
.515	98.830	-.11179	.10744	-.01271	-.03103	.00027	.00305	.54634	-.00722	-.00683	-.00618
.473	197.940	-.15953	.10124	-.01977	-.03964	-.00038	.00293	.53611	-.00721	-.00692	-.00608
.497	298.950	-.19168	.10044	-.02067	-.04082	-.00048	.00228	.55215	-.00687	-.00651	-.00562
.453	400.140	-.19938	.10108	-.01916	-.04141	-.00042	.00199	.56390	-.00664	-.00633	-.00546
.614	500.120	-.20057	.10166	-.01904	-.04135	-.00040	.00205	.56507	-.00665	-.00636	-.00563
	GRADIENT	.00000	.00000	.00000	.00000	.00000	.00000	.00000	.00000	.00000	.00000

RUN NO. 924/ 0 GRADIENT INTERVAL = -5.00/ 5.00

DLT-X	DLT-Z	CN	CA	CLM	CY	CYN	CBL	XCP/L	CPB1	CPB2	CPBC
200.420	32.717	-.08317	.11367	-.00342	-.02818	.00264	.00417	.61893	-.00781	-.00737	-.00662
200.510	102.250	-.12267	.10568	-.01314	-.03244	-.00106	.00288	.55290	-.00831	-.00781	-.00728
200.520	201.210	-.16402	.10121	-.02126	-.04020	-.00038	.00269	.53041	-.00856	-.00800	-.00761
200.380	300.340	-.19457	.10045	-.02030	-.04115	-.00047	.00223	.55568	-.00861	-.00803	-.00772
200.520	400.050	-.19985	.10123	-.01925	-.04147	-.00041	.00201	.56370	-.00838	-.00787	-.00750
200.530	500.150	-.20043	.10178	-.01904	-.04159	-.00042	.00206	.56501	-.00812	-.00765	-.00713
	GRADIENT	.00000	.00000	.00000	.00000	.00000	.00000	.00000	.00000	.00000	.00000

AEDC VA422(IA17) ORB AND ET SEPARATING(ORB DATA) (RTR371) (24 JUL 75)

REFERENCE DATA

SREF = 2690.0000 SQ.FT. XMRP = 1089.6000 IN. XO
LREF = 1290.3000 IN. YMRP = .0000 IN. YO
BREF = 1290.3000 IN. ZMRP = 375.0000 IN. ZO
SCALE = .0100

PARAMETRIC DATA

DLT-Y = 60.000 ALPHA = -10.000
BETA = 3.000 DLTALF = -10.000
DLTBTA = .000 MACH = 7.980
AILRON = .000 ELEVON = .000
GRID = 8.000 PO = 300.000

RUN NO. 933/ 0 GRADIENT INTERVAL = -5.00/ 5.00

DLT-X	DLT-Z	CN	CA	CLM	CY	CYN	CBL	XCP/L	CPB1	CPB2	CPBC
.317	402.810	-.01735	.09833	-.04601	-.03460	-.00152	.00817	-1.99170	.00332	.00344	.00502
.320	499.570	-.04020	.09494	-.03999	-.03524	-.00118	.00603	-.33470	.00270	.00276	.00404
.400	597.420	-.18405	.09650	-.02234	-.04065	-.00060	.00206	.53863	.00286	.00287	.00439
.509	700.130	-.19490	.09990	-.01973	-.04116	-.00043	.00185	.55876	.00337	.00341	.00498
.446	800.060	-.19882	.10106	-.01923	-.04126	-.00040	.00198	.56329	.00280	.00286	.00388
	GRADIENT	.00000	.00000	.00000	.00000	.00000	.00000	.00000	.00000	.00000	.00000

RUN NO. 932/ 0 GRADIENT INTERVAL = -5.00/ 5.00

DLT-X	DLT-Z	CN	CA	CLM	CY	CYN	CBL	XCP/L	CPB1	CPB2	CPBC
200.470	401.270	-.12183	.09318	-.03740	-.03805	-.00095	.00424	.35305	.00112	.00145	.00343
200.430	500.720	-.18581	.09481	-.02148	-.04040	-.00058	.00229	.54438	-.00151	-.00102	-.00001
200.320	600.340	-.19138	.09637	-.02022	-.04110	-.00047	.00195	.55435	-.00283	-.00228	-.00240
200.480	700.180	-.19545	.09996	-.01971	-.04151	-.00042	.00188	.55916	-.00237	-.00182	-.00211
200.550	800.150	-.19937	.10141	-.01915	-.04140	-.00041	.00202	.56396	-.00145	-.00096	-.00108
	GRADIENT	.00000	.00000	.00000	.00000	.00000	.00000	.00000	.00000	.00000	.00000

RUN NO. 931/ 0 GRADIENT INTERVAL = -5.00/ 5.00

DLT-X	DLT-Z	CN	CA	CLM	CY	CYN	CBL	XCP/L	CPB1	CPB2	CPBC
400.370	400.210	-.16517	.09608	-.02677	-.03995	-.00071	.00288	.49794	.00059	.00096	.00248
400.440	499.930	-.19088	.09775	-.02002	-.04109	-.00047	.00193	.55511	.00177	.00216	.00382
400.350	600.150	-.19080	.09869	-.01987	-.04113	-.00048	.00186	.55587	.00231	.00270	.00413
400.360	700.100	-.19463	.09942	-.01967	-.04122	-.00044	.00184	.55895	.00203	.00242	.00344
400.500	800.200	-.19948	.10128	-.01899	-.04138	-.00044	.00204	.56481	.00130	.00166	.00235
	GRADIENT	.00000	.00000	.00000	.00000	.00000	.00000	.00000	.00000	.00000	.00000

AEDC VA422(IA17) ORB AND ET SEPARATING(ORB DATA) (RTR372) (24 JUL 75)

REFERENCE DATA

SREF = 2690.0000 SQ.FT. XMRP = 1089.6000 IN. XO
LREF = 1290.3000 IN. YMRP = .0000 IN. YO
BREF = 1290.3000 IN. ZMRP = 375.0000 IN. ZO
SCALE = .0100

PARAMETRIC DATA

DLT-Y = 60.000 ALPHA = -5.000
BETA = .000 DLTALF = .000
DLTBTA = .000 MACH = 7.980
AILRON = .000 ELEVON = .000
GRID = 19.000 PO = 300.000

RUN NO. 941/ 0 GRADIENT INTERVAL = -5.00/ 5.00

DLT-X	DLT-Z	CN	CA	CLM	CY	CYN	CBL	XCP/L	CPB1	CPB2	CPBC
.532	18.043	-.06150	.10298	-.01073	.00747	.00203	.00106	.46546	-.01191	-.01193	-.01137
.535	100.410	-.05601	.09954	-.00584	.01377	.00191	-.00016	.55576	-.01202	-.01202	-.01148
.554	198.920	-.06487	.09381	-.01359	.00761	-.00073	.00132	.45058	-.01213	-.01212	-.01153
.536	298.660	-.10454	.08855	-.01709	.00198	.00017	.00018	.49650	-.01215	-.01209	-.01146
.505	399.650	-.12638	.08829	-.01479	.00135	.00019	-.00004	.54295	-.01212	-.01206	-.01141
.491	500.120	-.12826	.08887	-.01426	.00124	.00018	-.00007	.54882	-.01212	-.01206	-.01141
	GRADIENT	.00000	.00000	.00000	.00000	.00000	.00000	.00000	.00000	.00000	.00000

RUN NO. 940/ 0 GRADIENT INTERVAL = -5.00/ 5.00

DLT-X	DLT-Z	CN	CA	CLM	CY	CYN	CBL	XCP/L	CPB1	CPB2	CPBC
200.480	21.756	-.03748	.10110	.00073	.01890	.00428	.00035	.67955	-.01196	-.01210	-.01154
200.530	101.640	-.04916	.09529	-.00723	.00870	.00090	.00078	.51287	-.01201	-.01217	-.01171
200.420	201.620	-.06872	.09071	-.01609	.00363	-.00007	.00204	.42581	-.01203	-.01219	-.01174
200.550	300.260	-.11296	.08852	-.01708	.00163	.00014	.00014	.50878	-.01198	-.01214	-.01174
200.520	400.120	-.12843	.08879	-.01431	.00114	.00018	-.00008	.54859	-.01187	-.01204	-.01166
200.460	500.070	-.12864	.08916	-.01432	.00130	.00018	-.00007	.54868	-.01178	-.01193	-.01157
	GRADIENT	.00000	.00000	.00000	.00000	.00000	.00000	.00000	.00000	.00000	.00000

AEDC VA422(IA17) ORB AND ET SEPARATING(ORB DATA) (RTR373) (24 JUL 75)

REFERENCE DATA

SREF = 2690.0000 SQ.FT. XMRP = 1089.6000 IN. XO
LREF = 1290.3000 IN. YMRP = .0000 IN. YO
BREF = 1290.3000 IN. ZMRP = 375.0000 IN. ZO
SCALE = .0100

PARAMETRIC DATA

DLT-Y = 60.000 ALPHA = -5.000
BETA = .000 DLTALF = -10.000
DLTBTA = .000 MACH = 7.980
AILRON = .000 ELEVON = .000
GRID = 19.000 PO = 300.000

RUN NO. 949/ 0 GRADIENT INTERVAL = -5.00/ 5.00

DLT-X	DLT-Z	CN	CA	CLM	CY	CYN	CBL	XCP/L	CPB1	CPB2	CPBC
.453	402.230	.03843	.08380	-.04112	.00625	-.00073	.00472	1.73010	-.00572	-.00573	-.00391
.492	497.680	-.10840	.08442	-.01915	.00161	.00014	.00033	.48332	-.00569	-.00571	-.00410
.431	599.980	-.12699	.08661	-.01427	.00118	.00019	-.00007	.54764	-.00567	-.00565	-.00405
	GRADIENT	.00000	.00000	.00000	.00000	.00000	.00000	.00000	.00000	.00000	.00000

AEDC VA422(IA17) ORB AND ET SEPARATING(ORB DATA) (RTR373) (24 JUL 75)

REFERENCE DATA

SREF = 2690.0000 SQ.FT. XMRP = 1089.6000 IN. XO
LREF = 1290.3000 IN. YMRP = .0000 IN. YO
BREF = 1290.3000 IN. ZMRP = 375.0000 IN. ZO
SCALE = .0100

PARAMETRIC DATA

DLT-Y = 60.000 ALPHA = -5.000
BETA = .000 DLTALF = -10.000
DLTBTA = .000 MACH = 7.980
AILRON = .000 ELEVON = .000
GRID = 19.000 PO = 300.000

RUN NO. 948/ 0 GRADIENT INTERVAL = -5.00/ 5.00

DLT-X	DLT-Z	CN	CA	CLM	CY	CYN	CBL	XCP/L	CPB1	CPB2	CPBC
200.460	401.350	-.06779	.08194	-.02545	.00291	-.00002	.00082	.28462	-.00776	-.00767	-.00635
200.410	500.270	-.12152	.08478	-.01556	.00142	.00019	.00005	.53195	-.00790	-.00786	-.00679
200.450	600.170	-.12720	.08731	-.01418	.00130	.00020	-.00007	.54852	-.00760	-.00752	-.00639
	GRADIENT	.00000	.00000	.00000	.00000	.00000	.00000	.00000	.00000	.00000	.00000

RUN NO. 947/ 0 GRADIENT INTERVAL = -5.00/ 5.00

DLT-X	DLT-Z	CN	CA	CLM	CY	CYN	CBL	XCP/L	CPB1	CPB2	CPBC
400.510	400.260	-.10200	.08455	-.01941	.00178	.00010	.00029	.46971	-.00794	-.00789	-.00625
400.360	499.850	-.12639	.08602	-.01432	.00131	.00018	-.00006	.54668	-.00745	-.00735	-.00563
400.400	600.140	-.12662	.08745	-.01421	.00131	.00018	-.00006	.54776	-.00717	-.00703	-.00542
	GRADIENT	.00000	.00000	.00000	.00000	.00000	.00000	.00000	.00000	.00000	.00000

AEDC VA422(IA17) ORB AND ET SEPARATING(ORB DATA) (RTR375) (24 JUL 75)

REFERENCE DATA

SREF = 2690.0000 SQ.FT. XMRP = 1089.6000 IN. XO
LREF = 1290.3000 IN. YMRP = .0000 IN. YO
BREF = 1290.3000 IN. ZMRP = 375.0000 IN. ZO
SCALE = .0100

PARAMETRIC DATA

DLT-Y = 60.000 ALPHA = -5.000
BETA = .000 DLTALF = -20.000
DLTBTA = .000 MACH = 7.980
AILRON = .000 ELEVON = .000
GRID = 19.000 PO = 300.000

RUN NO. 958/ 0 GRADIENT INTERVAL = -5.00/ 5.00

DLT-X	DLT-Z	CN	CA	CLM	CY	CYN	CBL	XCP/L	CPB1	CPB2	CPBC
.413	800.100	.07280	.08081	-.04330	.00608	-.00091	.00432	1.25470	-.00124	-.00124	-.00064
.358	897.070	-.08058	.08211	-.02487	.00247	-.00004	.00023	.35136	-.00158	-.00154	-.00092
.427	999.770	-.12620	.08561	-.01447	.00128	.00021	-.00006	.54537	-.00156	-.00152	-.00072
	GRADIENT	.00000	.00000	.00000	.00000	.00000	.00000	.00000	.00000	.00000	.00000

RUN NO. 956/ 0 GRADIENT INTERVAL = -5.00/ 5.00

DLT-X	DLT-Z	CN	CA	CLM	CY	CYN	CBL	XCP/L	CPB1	CPB2	CPBC
200.430	752.850	.10568	.07213	-.05087	.00794	-.00098	.00668	1.14140	.01358	.01317	.01586
200.250	800.340	.10004	.07148	-.04570	.00714	-.00063	.00498	1.11680	.01232	.01209	.01410
200.610	896.340	-.11949	.08338	-.01585	.00129	.00019	.00017	.52737	.01140	.01127	.01304
200.320	1000.200	-.12595	.08573	-.01446	.00140	.00022	-.00005	.54520	.00894	.00892	.00971
	GRADIENT	.00000	.00000	.00000	.00000	.00000	.00000	.00000	.00000	.00000	.00000

ORIGINAL PAGE IS OF POOR QUALITY

AEDC VA422(IA17) ORB AND ET SEPARATING(ORB DATA) (RTR375) (24 JUL 75)

REFERENCE DATA

SREF = 2690.0000 SQ.FT. XMRP = 1089.6000 IN. XO
LREF = 1290.3000 IN. YMRP = .0000 IN. YO
BREF = 1290.3000 IN. ZMRP = 375.0000 IN. ZO
SCALE = .0100

PARAMETRIC DATA

DLT-Y = 60.000 ALPHA = -5.000
BETA = .000 DLTALF = -20.000
DLTBTA = .000 MACH = 7.980
AILRON = .000 ELEVON = .000
GRID = 19.000 PO = 300.000

RUN NO. 955/ 0 GRADIENT INTERVAL = -5.00/ 5.00

DLT-X	DLT-Z	CN	CA	CLM	CY	CYN	CBL	XCP/L	CPB1	CPB2	CPBC
400.390	751.520	-.04000	.07301	-.02509	.00543	-.00053	.00009	.03277	.00798	.00702	.01014
400.380	800.880	-.09228	.07772	-.01878	.00188	.00002	.00002	.45841	.00448	.00395	.00542
400.350	900.300	-.12299	.08393	-.01495	.00160	.00020	.00001	.53844	.00466	.00421	.00506
400.330	1000.200	-.12718	.08682	-.01419	.00119	.00019	-.00006	.54840	.00643	.00594	.00712
	GRADIENT	.00000	.00000	.00000	.00000	.00000	.00000	.00000	.00000	.00000	.00000

AEDC VA422(IA17) ORB AND ET SEPARATING(ORB DATA) (RTR376) (24 JUL 75)

REFERENCE DATA

SREF = 2690.0000 SQ.FT. XMRP = 1089.6000 IN. XO
LREF = 1290.3000 IN. YMRP = .0000 IN. YO
BREF = 1290.3000 IN. ZMRP = 375.0000 IN. ZO
SCALE = .0100

PARAMETRIC DATA

DLT-Y = 60.000 ALPHA = -5.000
BETA = .000 DLTALF = .000
DLTBTA = 3.000 MACH = 7.980
AILRON = .000 ELEVON = .000
GRID = 19.000 PO = 300.000

RUN NO. 965/ 0 GRADIENT INTERVAL = -5.00/ 5.00

DLT-X	DLT-Z	CN	CA	CLM	CY	CYN	CBL	XCP/L	CPB1	CPB2	CPBC
.572	19.690	-.05712	.10420	-.00950	.00251	.00114	-.00104	.49200	-.00905	-.00919	-.00874
.469	101.470	-.04389	.09720	-.00630	.00805	.00117	-.00018	.51654	-.00857	-.00873	-.00832
.527	201.830	-.05961	.09223	-.01395	.00473	-.00034	.00061	.42599	-.00827	-.00844	-.00803
.536	300.560	-.10349	.08782	-.01715	.00144	.00020	.00000	.49429	-.00790	-.00804	-.00764
.457	400.170	-.12616	.08780	-.01481	.00133	.00022	-.00005	.54263	-.00744	-.00757	-.00715
.664	496.840	-.12800	.08833	-.01423	.00130	.00021	-.00006	.54885	-.00695	-.00707	-.00660
	GRADIENT	.00000	.00000	.00000	.00000	.00000	.00000	.00000	.00000	.00000	.00000

RUN NO. 966/ 0 GRADIENT INTERVAL = -5.00/ 5.00

DLT-X	DLT-Z	CN	CA	CLM	CY	CYN	CBL	XCP/L	CPB1	CPB2	CPBC
200.530	22.407	-.02507	.10236	.00138	.01029	.00274	-.00095	.71415	-.01042	-.01052	-.01016
200.570	98.031	-.04680	.09353	-.00590	.00293	.00121	.00012	.53348	-.01084	-.01086	-.01034
200.480	198.490	-.08774	.08958	-.01541	.00233	.00011	.00104	.43245	-.01071	-.01061	-.00990
200.510	298.490	-.11131	.08767	-.01711	.00148	.00019	.00003	.50826	-.01070	-.01057	-.00992
200.530	399.900	-.12829	.08785	-.01422	.00120	.00022	-.00007	.54913	-.01078	-.01067	-.01004
200.440	500.070	-.12851	.08841	-.01422	.00134	.00022	-.00006	.54934	-.01083	-.01075	-.01011
	GRADIENT	.00000	.00000	.00000	.00000	.00000	.00000	.00000	.00000	.00000	.00000

AEDC VA422(IA17) ORB AND ET SEPARATING(ORB DATA) (RTR377) (24 JUL 75)

REFERENCE DATA

SREF = 2690.0000 SQ.FT. XMRP = 1089.6000 IN. XO
LREF = 1290.3000 IN. YMRP = .0000 IN. YO
BREF = 1290.3000 IN. ZMRP = 375.0000 IN. ZO
SCALE = .0100

PARAMETRIC DATA

DLT-Y = 60.000 ALPHA = -5.000
BETA = .000 DLTALF = -10.000
DLTBTA = 3.000 MACH = 7.980
AILRON = .000 ELEVON = .000
GRID = 19.000 PO = 300.000

RUN NO. 962/ 0 GRADIENT INTERVAL = -5.00/ 5.00

DLT-X	DLT-Z	CN	CA	CLM	CY	CYN	CBL	XCP/L	CPB1	CPB2	CPBC
.502	403.460	.05583	.08397	-.04157	.00129	.00021	-.00135	1.40460	-.00251	-.00256	-.00152
.370	500.440	-.10404	.08332	-.02035	.00135	.00017	-.00010	.46440	-.00232	-.00238	-.00139
-.078	601.430	-.12602	.08613	-.01427	.00119	.00022	-.00005	.54680	-.00193	-.00195	-.00087
	GRADIENT	.00000	.00000	.00000	.00000	.00000	.00000	.00000	.00000	.00000	.00000

RUN NO. 963/ 0 GRADIENT INTERVAL = -5.00/ 5.00

DLT-X	DLT-Z	CN	CA	CLM	CY	CYN	CBL	XCP/L	CPB1	CPB2	CPBC
200.510	398.080	-.05733	.08166	-.02805	.00174	.00017	.00016	.17076	-.00347	-.00352	-.00255
200.450	499.090	-.12119	.08455	-.01580	.00120	.00020	-.00004	.52965	-.00312	-.00319	-.00181
200.520	600.270	-.12687	.08681	-.01415	.00115	.00023	-.00006	.54845	-.00269	-.00277	-.00131
	GRADIENT	.00000	.00000	.00000	.00000	.00000	.00000	.00000	.00000	.00000	.00000

RUN NO. 964/ 0 GRADIENT INTERVAL = -5.00/ 5.00

DLT-X	DLT-Z	CN	CA	CLM	CY	CYN	CBL	XCP/L	CPB1	CPB2	CPBC
400.480	400.870	-.10024	.08421	-.01989	.00151	.00020	.00009	.46156	-.00466	-.00482	-.00397
400.520	500.530	-.12639	.08561	-.01432	.00107	.00019	-.00006	.54671	-.00436	-.00453	-.00379
400.330	599.980	-.12716	.08767	-.01422	.00121	.00022	-.00006	.54814	-.00365	-.00377	-.00289
	GRADIENT	.00000	.00000	.00000	.00000	.00000	.00000	.00000	.00000	.00000	.00000

AEDC VA422(1A17) ORB AND ET SEPARATING(ORB DATA) (RTR379) (24 JUL 75)

REFERENCE DATA

SREF = 2690.0000 SQ.FT. XMRP = 1089.6000 IN. XO
LREF = 1290.3000 IN. YMRP = .0000 IN. YO
BREF = 1290.3000 IN. ZMRP = 375.0000 IN. ZO
SCALE = .0100

PARAMETRIC DATA

DLT-Y = 60.000 ALPHA = -5.000
BETA = .000 DLTALF = -20.000
DLTBTA = 3.000 MACH = 7.980
AILRON = .000 ELEVON = .000
GRID = 19.000 PO = 300.000

RUN NO. 961/ 0 GRADIENT INTERVAL = -5.00/ 5.00

DLT-X	DLT-Z	CN	CA	CLM	CY	CYN	CBL	XCP/L	CPB1	CPB2	CPBC
.485	803.780	.08377	.07995	-.04458	.00253	-.00021	.00054	1.19220	.00016	-.00010	.00084
.512	900.920	-.08034	.08147	-.02470	.00111	.00023	-.00042	.35249	.00032	.00004	.00086
.444	1000.300	-.12571	.08510	-.01442	.00127	.00022	-.00006	.54530	.00076	.00043	.00121
	GRADIENT	.00000	.00000	.00000	.00000	.00000	.00000	.00000	.00000	.00000	.00000

RUN NO. 959/ 0 GRADIENT INTERVAL = -5.00/ 5.00

DLT-X	DLT-Z	CN	CA	CLM	CY	CYN	CBL	XCP/L	CPB1	CPB2	CPBC
200.440	752.410	.11627	.07118	-.05357	.00106	.00003	-.00115	1.12070	-.00117	-.00135	.00032
200.420	802.560	.02743	.07493	-.04423	.00213	.00001	.00022	2.27260	-.00207	-.00223	-.00091
200.430	900.410	-.12072	.08319	-.01550	.00109	.00019	-.00015	.53163	-.00272	-.00284	-.00198
200.400	1000.300	-.12537	.08560	-.01448	.00137	.00021	-.00003	.54451	-.00265	-.00266	-.00192
	GRADIENT	.00000	.00000	.00000	.00000	.00000	.00000	.00000	.00000	.00000	.00000

RUN NO. 960/ 0 GRADIENT INTERVAL = -5.00/ 5.00

DLT-X	DLT-Z	CN	CA	CLM	CY	CYN	CBL	XCP/L	CPB1	CPB2	CPBC
400.440	747.950	-.03000	.07318	-.02804	.00126	.00017	-.00005	-.27472	.00191	.00162	.00488
400.170	800.350	-.02519	.07202	-.02608	.00083	.00021	-.00015	-.37554	.00597	.00539	.01042
400.490	898.450	-.12341	.08341	-.01491	.00120	.00023	-.00014	.53914	.00972	.00906	.01409
400.400	1000.300	-.12703	.08632	-.01416	.00136	.00022	-.00006	.54850	.00796	.00758	.01013
	GRADIENT	.00000	.00000	.00000	.00000	.00000	.00000	.00000	.00000	.00000	.00000

AEDC VA422(IA17) ORB AND ET SEPARATING(ORB DATA) (RTR380) (24 JUL 75)

REFERENCE DATA

SREF = 2690.0000 SQ.FT. XMRP = 1089.6000 IN. XO
LREF = 1290.3000 IN. YMRP = .0000 IN. YO
BREF = 1290.3000 IN. ZMRP = 375.0000 IN. ZO
SCALE = .0100

PARAMETRIC DATA

DLT-Y = 60.000 ALPHA = 5.000
BETA = .000 DLTALF = .000
DLTBTA = .000 MACH = 7.980
AILRON = .000 ELEVON = .000
GRID = 24.000 PO = 300.000

RUN NO. 971/ 0 GRADIENT INTERVAL = -5.00/ 5.00

DLT-X	DLT-Z	CN	CA	CLM	CY	CYN	CBL	XCP/L	CPB1	CPB2	CPBC
.537	17.726	.02211	.06201	-.01287	-.00403	-.00051	-.00012	1.24200	-.01390	-.01384	-.01295
.567	101.640	.03975	.07430	.00099	.00046	.00222	-.00046	.63510	-.01404	-.01400	-.01314
.655	201.170	.07324	.07306	.00646	-.00144	.00194	-.00216	.57174	-.01414	-.01409	-.01323
.580	300.390	.12092	.07464	-.00649	.00368	-.00024	-.00184	.71366	-.01412	-.01408	-.01323
.688	398.990	.11134	.06589	-.01541	.00299	-.00034	.00406	.79843	-.01421	-.01416	-.01331
.588	498.460	.04905	.06423	-.01136	.00090	.00006	.00025	.89167	-.01429	-.01423	-.01334
	GRADIENT	.00000	.00000	.00000	.00000	.00000	.00000	.00000	.00000	.00000	.00000

RUN NO. 970/ 0 GRADIENT INTERVAL = -5.00/ 5.00

DLT-X	DLT-Z	CN	CA	CLM	CY	CYN	CBL	XCP/L	CPB1	CPB2	CPBC
200.580	19.533	.03943	.07335	.00337	.00040	.00230	-.00078	.57444	-.01374	-.01375	-.01277
200.510	99.540	.06193	.07076	.00795	-.00055	.00279	-.00149	.53164	-.01376	-.01379	-.01283
200.550	200.320	.10768	.07437	-.00001	.00109	.00076	-.00291	.66009	-.01379	-.01382	-.01288
200.590	301.870	.13182	.07115	-.01399	.00733	-.00116	.00299	.76614	-.01390	-.01392	-.01299
200.580	400.710	.07295	.06375	-.01399	.00166	-.00005	.00162	.85173	-.01399	-.01402	-.01312
200.630	499.950	.03546	.06503	-.00848	.00053	.00011	-.00009	.89913	-.01406	-.01407	-.01326
	GRADIENT	.00000	.00000	.00000	.00000	.00000	.00000	.00000	.00000	.00000	.00000

AEDC VA422(IA17) ORB AND ET SEPARATING(ORB DATA) (RTR381) (24 JUL 75)

REFERENCE DATA

SREF = 2690.0000 SQ.FT. XMRP = 1089.6000 IN. XO
LREF = 1290.3000 IN. YMRP = .0000 IN. YO
BREF = 1290.3000 IN. ZMRP = 375.0000 IN. ZO
SCALE = .0100

PARAMETRIC DATA

DLT-Y = 60.000 ALPHA = 5.000
BETA = .000 DLTALF = -10.000
DLTBTA = .000 MACH = 7.980
AILRON = .000 ELEVON = .000
GRID = 24.000 PO = 300.000

RUN NO. 979/ 0 GRADIENT INTERVAL = -5.00/ 5.00

DLT-X	DLT-Z	CN	CA	CLM	CY	CYN	CBL	XCP/L	CPB1	CPB2	CPBC
.502	401.000	.17725	.07554	-.00767	.00440	.00000	-.00142	.70329	-.01146	-.01160	-.01018
.494	498.520	.16141	.06785	-.02011	.00662	-.00101	.00582	.78462	-.01157	-.01171	-.01035
.501	597.690	.07108	.06233	-.01459	.00126	-.00001	.00126	.86527	-.01163	-.01177	-.01046
	GRADIENT	.00000	.00000	.00000	.00000	.00000	.00000	.00000	.00000	.00000	.00000

ORIGINAL PAGE IS OF POOR QUALITY

AEDC VA422(IA17) ORB AND ET SEPARATING(ORB DATA) (RTR381) (24 JUL 75)

REFERENCE DATA

SREF = 2690.0000 SQ.FT. XMRP = 1089.6000 IN. XO
LREF = 1290.3000 IN. YMRP = .0000 IN. YO
BREF = 1290.3000 IN. ZMRP = 375.0000 IN. ZO
SCALE = .0100

PARAMETRIC DATA

DLT-Y = 60.000 ALPHA = 5.000
BETA = .000 DLTALF = -10.000
DLTBTA = .000 MACH = 7.980
AILRON = .000 ELEVON = .000
GRID = 24.000 PO = 300.000

RUN NO. 979/ 0 GRADIENT INTERVAL = -5.00/ 5.00

DLT-X	DLT-Z	CN	CA	CLM	CY	CYN	CBL	XCP/L	CPB1	CPB2	CPBC
200.400	402.640	.18110	.07149	-.01849	.00948	-.00165	.00402	.76208	-.01135	-.01149	-.00992
200.520	501.260	.10093	.06208	-.01742	.00220	-.00019	.00314	.83264	-.01142	-.01156	-.00995
200.430	600.140	.04023	.06312	-.00956	.00072	.00008	-.00003	.89774	-.01157	-.01169	-.01009
	GRADIENT	.00000	.00000	.00000	.00000	.00000	.00000	.00000	.00000	.00000	.00000

RUN NO. 977/ 0 GRADIENT INTERVAL = -5.00/ 5.00

DLT-X	DLT-Z	CN	CA	CLM	CY	CYN	CBL	XCP/L	CPB1	CPB2	CPBC
400.470	400.120	.13586	.06313	-.02006	.00317	-.00039	.00504	.80768	-.01178	-.01188	-.01031
400.560	498.320	.05532	.06233	-.01268	.00120	.00000	.00030	.88926	-.01177	-.01187	-.01036
400.550	599.850	.03291	.06425	-.00737	.00027	.00015	-.00007	.88394	-.01179	-.01189	-.01039
	GRADIENT	.00000	.00000	.00000	.00000	.00000	.00000	.00000	.00000	.00000	.00000

AEDC VA422(IA17) ORB AND ET SEPARATING(ORB DATA) (RTR383) (24 JUL 75)

REFERENCE DATA

SREF = 2690.0000 SQ.FT. XMRP = 1089.6000 IN. XO
LREF = 1290.3000 IN. YMRP = .0000 IN. YO
BREF = 1290.3000 IN. ZMRP = 375.0000 IN. ZO
SCALE = .0100

PARAMETRIC DATA

DLT-Y = 60.000 ALPHA = 5.000
BETA = .000 DLTALF = -20.000
DLTBTA = .000 MACH = 7.980
AILRON = .000 ELEVON = .000
GRID = 24.000 PO = 300.000

RUN NO. 989/ 0 GRADIENT INTERVAL = -5.00/ 5.00

DLT-X	DLT-Z	CN	CA	CLM	CY	CYN	CBL	XCP/L	CPB1	CPB2	CPBC
.402	800.010	.09574	.05791	-.02281	.00219	-.00029	.00078	.89612	-.00235	-.00199	-.00123
.371	899.580	.03247	.06168	-.00693	.00041	.00010	-.00014	.87349	-.00275	-.00246	-.00155
.454	1000.200	.03269	.06136	-.00692	.00029	.00017	-.00006	.87161	-.00216	-.00191	-.00057
	GRADIENT	.00000	.00000	.00000	.00000	.00000	.00000	.00000	.00000	.00000	.00000

RUN NO. 988/ 0 GRADIENT INTERVAL = -5.00/ 5.00

DLT-X	DLT-Z	CN	CA	CLM	CY	CYN	CBL	XCP/L	CPB1	CPB2	CPBC
200.370	750.370	.04687	.05949	-.01135	.00113	.00000	-.00001	.90205	.00267	.00325	.00400
200.420	800.200	.03299	.06084	-.00719	.00090	.00004	-.00022	.87810	.00220	.00273	.00334
200.400	900.300	.03268	.06045	-.00691	.00014	.00018	-.00004	.87137	.00197	.00250	.00315
200.480	1000.300	.03245	.06056	-.00689	.00002	.00017	-.00005	.87235	.00211	.00277	.00348
	GRADIENT	.00000	.00000	.00000	.00000	.00000	.00000	.00000	.00000	.00000	.00000

AEDC VA422(IA17) ORB AND ET SEPARATING(ORB DATA) (RTR383) (24 JUL 75)

REFERENCE DATA

SREF = 2690.0000 SQ.FT. XMRP = 1089.6000 IN. XO
LREF = 1290.3000 IN. YMRP = .0000 IN. YO
BREF = 1290.3000 IN. ZMRP = 375.0000 IN. ZO
SCALE = .0100

PARAMETRIC DATA

DLT-Y = 60.000 ALPHA = 5.000
BETA = .000 DLTALF = -20.000
DLTBTA = .000 MACH = 7.980
AILRON = .000 ELEVON = .000
GRID = 24.000 PO = 300.000

RUN NO. 985/ 0 GRADIENT INTERVAL = -5.00/ 5.00

DLT-X	DLT-Z	CN	CA	CLM	CY	CYN	CBL	XCP/L	CPB1	CPB2	CPBC
400.450	750.290	.03230	.08084	-.00897	.00009	.00015	-.00008	.87570	.00288	.00345	.00454
400.540	800.240	.03198	.08078	-.00895	.00011	.00017	-.00005	.87728	.00278	.00323	.00448
400.450	900.280	.03127	.08114	-.00701	.00017	.00015	-.00004	.88415	.00282	.00289	.00436
400.530	1000.200	.03058	.08058	-.00690	.00016	.00015	-.00004	.88582	.00186	.00214	.00368
	GRADIENT	.00000	.00000	.00000	.00000	.00000	.00000	.00000	.00000	.00000	.00000

AEDC VA422(IA17) ORB AND ET SEPARATING(ORB DATA) (RTR384) (24 JUL 75)

REFERENCE DATA

SREF = 2690.0000 SQ.FT. XMRP = 1089.6000 IN. XO
LREF = 1290.3000 IN. YMRP = .0000 IN. YO
BREF = 1290.3000 IN. ZMRP = 375.0000 IN. ZO
SCALE = .0100

PARAMETRIC DATA

DLT-Y = 60.000 ALPHA = 5.000
BETA = .000 DLTALF = .000
DLTBTA = 3.000 MACH = 7.980
AILRON = .000 ELEVON = .000
GRID = 24.000 PO = 300.000

RUN NO. 995/ 0 GRADIENT INTERVAL = -5.00/ 5.00

DLT-X	DLT-Z	CN	CA	CLM	CY	CYN	CBL	XCP/L	CPB1	CPB2	CPBC
.516	18.634	.02436	.06143	-.01243	-.00344	-.00050	-.00133	1.17040	-.01163	-.01165	-.01094
.606	98.613	.03749	.07509	.00004	-.00122	.00088	-.00106	.65887	-.01137	-.01141	-.01064
.533	199.430	.07292	.07327	.00723	-.00122	.00103	-.00176	.56082	-.01119	-.01124	-.01043
.579	301.200	.12687	.07743	-.00834	.00077	.00017	-.00177	.71003	-.01099	-.01105	-.01021
.529	401.690	.11452	.06581	-.01590	.00125	.00003	.00099	.79883	-.01086	-.01092	-.01011
.693	498.670	.05053	.06450	-.01143	.00043	.00011	-.00003	.88621	-.01069	-.01074	-.00999
	GRADIENT	.00000	.00000	.00000	.00000	.00000	.00000	.00000	.00000	.00000	.00000

RUN NO. 996/ 0 GRADIENT INTERVAL = -5.00/ 5.00

DLT-X	DLT-Z	CN	CA	CLM	CY	CYN	CBL	XCP/L	CPB1	CPB2	CPBC
200.560	22.472	.04504	.07359	.00301	-.00132	.00149	-.00130	.59313	-.01276	-.01274	-.01225
200.590	100.450	.08155	.07081	.00841	-.00105	.00138	-.00143	.52331	-.01307	-.01305	-.01257
200.560	200.390	.10811	.07615	.00049	-.00068	.00067	-.00230	.65545	-.01314	-.01312	-.01256
200.520	299.740	.14025	.07033	-.01421	.00327	-.00039	.00039	.76135	-.01316	-.01314	-.01252
200.600	397.800	.07268	.06433	-.01379	.00088	.00009	.00049	.84976	-.01318	-.01314	-.01248
200.610	499.120	.03564	.06562	-.00868	.00038	.00014	-.00009	.90287	-.01320	-.01315	-.01244
	GRADIENT	.00000	.00000	.00000	.00000	.00000	.00000	.00000	.00000	.00000	.00000

AEDC VA422(IA17) ORB AND ET SEPARATING(ORB DATA) (RTR385) (24 JUL 75)

REFERENCE DATA

SREF = 2690.0000 SQ.FT. XMRP = 1089.6000 IN. XO
LREF = 1290.3000 IN. YMRP = .0000 IN. YO
BREF = 1290.3000 IN. ZMRP = 375.0000 IN. ZO
SCALE = .0100

PARAMETRIC DATA

DLT-Y = 60.000 ALPHA = 5.000
BETA = .000 DLTALF = -10.000
DLTBTA = 3.000 MACH = 7.980
AILRON = .000 ELEVON = .000
GRID = 24.000 PO = 300.000

RUN NO. 992/ 0 GRADIENT INTERVAL = -5.00/ 5.00

DLT-X	DLT-Z	CN	CA	CLM	CY	CYN	CBL	XCP/L	CPB1	CPB2	CPBC
.475	401.790	.18422	.07823	-.00824	.00071	.00040	-.00244	.70473	-.00505	-.00509	-.00490
.514	502.370	.16401	.06581	-.02094	.00250	-.00020	.00229	.78768	-.00424	-.00431	-.00403
-.688	603.100	.06799	.06289	-.01402	.00080	.00006	.00040	.86621	-.00348	-.00355	-.00326
	GRADIENT	.00000	.00000	.00000	.00000	.00000	.00000	.00000	.00000	.00000	.00000

RUN NO. 993/ 0 GRADIENT INTERVAL = -5.00/ 5.00

DLT-X	DLT-Z	CN	CA	CLM	CY	CYN	CBL	XCP/L	CPB1	CPB2	CPBC
200.440	399.610	.19258	.07185	-.01864	.00611	-.00091	.00097	.75680	-.00657	-.00657	-.00639
200.490	497.430	.10430	.06340	-.01776	.00129	-.00005	.00169	.83033	-.00703	-.00702	-.00678
200.470	598.800	.04163	.06446	-.01014	.00050	.00009	-.00008	.90363	-.00746	-.00743	-.00719
	GRADIENT	.00000	.00000	.00000	.00000	.00000	.00000	.00000	.00000	.00000	.00000

RUN NO. 994/ 0 GRADIENT INTERVAL = -5.00/ 5.00

DLT-X	DLT-Z	CN	CA	CLM	CY	CYN	CBL	XCP/L	CPB1	CPB2	CPBC
400.350	401.790	.13760	.06375	-.02043	.00214	-.00015	.00286	.80844	-.00843	-.00851	-.00786
400.510	500.300	.05715	.06316	-.01288	.00072	.00004	.00007	.88541	-.00827	-.00834	-.00774
400.440	600.040	.03298	.06500	-.00742	.00062	.00014	-.00009	.88495	-.00814	-.00817	-.00768
	GRADIENT	.00000	.00000	.00000	.00000	.00000	.00000	.00000	.00000	.00000	.00000

AEDC VA422(IA17) ORB AND ET SEPARATING(ORB DATA) (RTR387) (24 JUL 75)

REFERENCE DATA

SREF = 2690.0000 SQ.FT. XMRP = 1089.6000 IN. XO
LREF = 1290.3000 IN. YMRP = .0000 IN. YO
BREF = 1290.3000 IN. ZMRP = 375.0000 IN. ZO
SCALE = .0100

PARAMETRIC DATA

DLT-Y = 60.000 ALPHA = 5.000
BETA = .000 DLTALF = -20.000
DLTBTA = 3.000 MACH = 7.980
AILRON = .000 ELEVON = .000
GRID = 24.000 PO = 300.000

RUN NO. 991/ 0 GRADIENT INTERVAL = -5.00/ 5.00

DLT-X	DLT-Z	CN	CA	CLM	CY	CYN	CBL	XCP/L	CPB1	CPB2	CPBC
.357	801.220	.11075	.05764	-.02462	.00028	.00007	-.00013	.88227	.00387	.00420	.00514
.467	900.200	.03375	.06100	-.00724	.00032	.00013	-.00007	.87447	.00385	.00431	.00530
.516	1000.200	.03243	.06134	-.00690	.00007	.00015	-.00007	.87277	.00373	.00402	.00503
	GRADIENT	.00000	.00000	.00000	.00000	.00000	.00000	.00000	.00000	.00000	.00000

RUN NO. 989/ 0 GRADIENT INTERVAL = -5.00/ 5.00

DLT-X	DLT-Z	CN	CA	CLM	CY	CYN	CBL	XCP/L	CPB1	CPB2	CPBC
200.360	750.420	.05387	.06035	-.01318	.00023	.00009	-.00001	.90468	.00207	.00316	.00378
200.460	800.360	.03413	.06141	-.00740	.00021	.00015	-.00004	.87675	.00208	.00333	.00400
200.430	900.190	.03307	.05222	-.00701	.00023	.00013	-.00008	.87190	.00203	.00346	.00416
200.480	1000.200	.03246	.06190	-.00699	.00017	.00013	-.00007	.87550	.00191	.00334	.00415
	GRADIENT	.00000	.00000	.00000	.00000	.00000	.00000	.00000	.00000	.00000	.00000

RUN NO. 990/ 0 GRADIENT INTERVAL = -5.00/ 5.00

DLT-X	DLT-Z	CN	CA	CLM	CY	CYN	CBL	XCP/L	CPB1	CPB2	CPBC
400.390	750.120	.03370	.06160	-.00703	.00035	.00012	-.00008	.86852	.00092	.00165	.00210
400.460	800.360	.03339	.06164	-.00695	.00042	.00010	-.00008	.86805	.00097	.00159	.00221
400.530	900.350	.03324	.06146	-.00689	.00025	.00015	-.00006	.86731	.00131	.00189	.00260
400.480	1000.400	.03212	.06123	-.00684	.00032	.00012	-.00008	.87306	.00169	.00227	.00313
	GRADIENT	.00000	.00000	.00000	.00000	.00000	.00000	.00000	.00000	.00000	.00000

ORIGINAL PAGE IS OF POOR QUALITY

AEDC VA422(IA17) ORB AND ET SEPARATING(ORB DATA) (RTR401) (24 JUL 75)

REFERENCE DATA

SREF = 2690.0000 SQ.FT. XMRP = 1089.6000 IN. XO
LREF = 1290.3000 IN. YMRP = .0000 IN. YO
BREF = 1290.3000 IN. ZMRP = 375.0000 IN. ZO
SCALE = .0100

PARAMETRIC DATA

DLT-Y = 200.000 ALPHA = .000
BETA = .000 DLTALF = .000
DLTBTA = 3.000 MACH = 5.930
AILRON = .000 ELEVON = .000
GRID = 1.000

RUN NO. 94/ 0 GRADIENT INTERVAL = -5.00/ 5.00

DLT-X	DLT-Z	CN	CA	CLM	CY	CYN	CBL	XCP/L	CPB1	CPB2	CPBC
.636	19.045	.01077	.08881	-.00773	.00303	.00460	.00077	1.37730	-.02771	-.02718	-.02646
.547	100.260	.00112	.08338	-.00075	.01367	.00634	-.00184	.00000	-.02801	-.02751	-.02684
.523	200.040	.01645	.08309	-.00462	.00972	.00085	-.00181	.94059	-.02817	-.02769	-.02696
.595	299.150	.01624	.08134	-.01360	.00976	-.00120	.00194	1.49750	-.02814	-.02761	-.02685
.625	398.710	-.00712	.07577	-.01767	.00316	-.00020	.00361	-1.82220	-.02812	-.02757	-.02678
.597	499.210	-.04590	.07587	-.01214	.00132	.00017	-.00003	.39561	-.02806	-.02751	-.02672
.606	600.180	-.04872	.07703	-.01121	.00113	.00019	-.00008	.42992	-.02792	-.02736	-.02650
	GRADIENT	.00000	.00000	.00000	.00000	.00000	.00000	.00000	.00000	.00000	.00000

RUN NO. 93/ 0 GRADIENT INTERVAL = -5.00/ 5.00

DLT-X	DLT-Z	CN	CA	CLM	CY	CYN	CBL	XCP/L	CPB1	CPB2	CPBC
200.530	20.527	.01436	.08387	-.00089	.01417	.00838	-.00101	.72213	-.02754	-.02708	-.02621
200.500	100.850	.01005	.08244	-.00053	.01146	.00299	-.00212	.71304	-.02773	-.02732	-.02652
200.550	201.020	.02160	.08161	-.00996	.01181	-.00083	.00008	1.12090	-.02774	-.02737	-.02659
200.490	301.650	.01846	.08073	-.01765	.00826	-.00141	.00552	1.61620	-.02779	-.02741	-.02663
200.520	400.290	-.03310	.07524	-.01480	.00200	.00005	.00067	.21303	-.02791	-.02751	-.02679
200.470	500.090	-.04879	.07671	-.01121	.00117	.00019	-.00008	.43034	-.02790	-.02751	-.02683
200.550	600.100	-.04881	.07714	-.01122	.00118	.00019	-.00008	.43018	-.02783	-.02743	-.02673
	GRADIENT	.00000	.00000	.00000	.00000	.00000	.00000	.00000	.00000	.00000	.00000

AEDC VA422(IA17) ORB AND ET SEPARATING(ORB DATA) (RTR402) (24 JUL 75)

REFERENCE DATA

SREF = 2690.0000 SQ.FT. XMRP = 1089.6000 IN. XO
LREF = 1290.3000 IN. YMRP = .0000 IN. YO
BREF = 1290.3000 IN. ZMRP = 375.0000 IN. ZO
SCALE = .0100

PARAMETRIC DATA

DLT-Y = 200.000 ALPHA = .000
BETA = .000 DLTALF = -10.000
DLTBTA = 3.000 MACH = 5.930
AILRON = .000 ELEVON = .000
GRID = 1.000

RUN NO. 90/ 0 GRADIENT INTERVAL = -5.00/ 5.00

DLT-X	DLT-Z	CN	CA	CLM	CY	CYN	CBL	XCP/L	CPB1	CPB2	CPBC
.498	401.600	.10716	.08054	-.02721	.01777	-.00265	.00621	.91390	-.02319	-.02299	-.02184
.542	497.990	.03571	.07583	-.02305	.00583	-.00076	.00766	1.30550	-.02310	-.02293	-.02183
.469	598.440	-.03754	.07551	-.01440	.00179	.00008	.00016	.27645	-.02312	-.02298	-.02186
.616	800.160	-.04838	.07747	-.01131	.00103	.00019	-.00008	.42616	-.02316	-.02295	-.02186
	GRADIENT	.00000	.00000	.00000	.00000	.00000	.00000	.00000	.00000	.00000	.00000

RUN NO. 89/ 0 GRADIENT INTERVAL = -5.00/ 5.00

DLT-X	DLT-Z	CN	CA	CLM	CY	CYN	CBL	XCP/L	CPB1	CPB2	CPBC
200.450	402.720	.06311	.08051	-.02359	.01189	-.00211	.00851	1.03390	-.02441	-.02407	-.02334
200.510	500.580	-.01496	.07417	-.01863	.00292	-.00011	.00177	-.58606	-.02443	-.02412	-.02345
200.550	600.140	-.04797	.07601	-.01147	.00111	.00020	-.00008	.42088	-.02441	-.02412	-.02356
200.540	800.180	-.04869	.07752	-.01130	.00107	.00020	-.00008	.42797	-.02325	-.02300	-.02236
	GRADIENT	.00000	.00000	.00000	.00000	.00000	.00000	.00000	.00000	.00000	.00000

RUN NO. 88/ 0 GRADIENT INTERVAL = -5.00/ 5.00

DLT-X	DLT-Z	CN	CA	CLM	CY	CYN	CBL	XCP/L	CPB1	CPB2	CPBC
400.450	400.170	.02787	.07423	-.02396	.00512	-.00061	.00650	1.51990	-.02108	-.02096	-.01958
400.540	498.630	-.04131	.07558	-.01349	.00163	.00012	.00005	.33349	-.02111	-.02093	-.01965
400.460	600.230	-.04834	.07523	-.01129	.00121	.00021	-.00008	.42644	-.02136	-.02116	-.01996
400.520	800.250	-.04858	.07752	-.01131	.00113	.00020	-.00008	.42712	-.02152	-.02126	-.02029
	GRADIENT	.00000	.00000	.00000	.00000	.00000	.00000	.00000	.00000	.00000	.00000

AEDC VA422(IA17) ORB AND ET SEPARATING(ORB DATA) (RTR403) (24 JUL 75)

REFERENCE DATA

SREF = 2690.0000 SQ.FT. XMRP = 1089.6000 IN. XO
LREF = 1290.3000 IN. YMRP = .0000 IN. YO
BREF = 1290.3000 IN. ZMRP = 375.0000 IN. ZO
SCALE = .0100

PARAMETRIC DATA

DLT-Y = 200.000 ALPHA = .000
BETA = .000 DLTALF = -20.000
DLTBTA = 3.000 MACH = 5.930
AILRON = .000 ELEVON = .000
GRID = 1.000

RUN NO. 84/ 0 GRADIENT INTERVAL = -5.00/ 5.00

DLT-X	DLT-Z	CN	CA	CLM	CY	CYN	CBL	XCP/L	CPB1	CPB2	CPBC
.499	801.810	.05044	.06772	-.03388	.00642	-.00065	.00371	1.33170	-.01482	-.01470	-.01397
.507	998.920	-.04848	.07526	-.01134	.00104	.00021	-.00008	.42815	-.01558	-.01545	-.01476
	GRADIENT	.00000	.00000	.00000	.00000	.00000	.00000	.00000	.00000	.00000	.00000

RUN NO. 83/ 0 GRADIENT INTERVAL = -5.00/ 5.00

DLT-X	DLT-Z	CN	CA	CLM	CY	CYN	CBL	XCP/L	CPB1	CPB2	CPBC
200.450	800.380	-.03795	.07234	-.01480	.00175	.00009	.00017	.27012	-.01489	-.01483	-.01408
200.460	1000.300	-.04865	.07548	-.01131	.00102	.00020	-.00008	.42755	-.01391	-.01395	-.01316
	GRADIENT	.00000	.00000	.00000	.00000	.00000	.00000	.00000	.00000	.00000	.00000

RUN NO. 82/ 0 GRADIENT INTERVAL = -5.00/ 5.00

DLT-X	DLT-Z	CN	CA	CLM	CY	CYN	CBL	XCP/L	CPB1	CPB2	CPBC
400.420	800.290	-.04842	.07338	-.01133	.00099	.00021	-.00009	.42604	-.01193	-.01214	-.01070
400.440	1000.300	-.04852	.07456	-.01130	.00107	.00022	-.00009	.42720	-.01242	-.01248	-.01154
	GRADIENT	.00000	.00000	.00000	.00000	.00000	.00000	.00000	.00000	.00000	.00000

AEDC VA422(IA17) ORB AND ET SEPARATING(ORB DATA) (RTR405) (24 JUL 75)

REFERENCE DATA

SREF = 2690.0000 SQ.FT. XMRP = 1089.6000 IN. XO
LREF = 1290.3000 IN. YMRP = .0000 IN. YO
BREF = 1290.3000 IN. ZMRP = 375.0000 IN. ZO
SCALE = .0100

PARAMETRIC DATA

DLT-Y = 200.000 ALPHA = .000
BETA = .000 DLTALF = -20.000
DLTBTA = 3.000 MACH = 5.930
AILRON = .000 ELEVON = .000
GRID = 26.000

RUN NO. 384/ 0 GRADIENT INTERVAL = -5.00/ 5.00

DLT-X	DLT-Z	CN	CA	CLM	CY	CYN	CBL	XCP/L	CPB1	CPB2	CPBC
.329	799.670	.05214	.06737	-.03444	.00658	-.00085	.00377	1.32050	-.01656	-.01692	-.01558
.468	899.040	-.03772	.07288	-.01525	.00182	.00015	.00017	.25565	-.01681	-.01709	-.01584
.556	1000.300	-.04866	.07463	-.01148	.00118	.00022	-.00010	.42448	-.01692	-.01710	-.01589
	GRADIENT	.00000	.00000	.00000	.00000	.00000	.00000	.00000	.00000	.00000	.00000

AEDC VA422(IA17) ORB AND ET SEPARATING(ORB DATA) (RTR405) (24 JUL 75)

REFERENCE DATA

SREF = 2690.0000 SQ.FT. XMRP = 1089.6000 IN. XO
LREF = 1290.3000 IN. YMRP = .0000 IN. YO
BREF = 1290.3000 IN. ZMRP = 375.0000 IN. ZO
SCALE = .0100

PARAMETRIC DATA

DLT-Y = 200.000 ALPHA = .000
BETA = .000 DLTALF = -20.000
DLTBTA = 3.000 MACH = 5.930
AILRON = .000 ELEVON = .000
GRID = 26.000

RUN NO. 379/ 0 GRADIENT INTERVAL = -5.00/ 5.00

DLT-X	DLT-Z	CN	CA	CLM	CY	CYN	CBL	XCP/L	CPB1	CPB2	CPBC
200.450	750.580	.00102	.06616	-.02676	.00424	-.00034	.00083	.00000	-.01287	-.01275	-.01172
200.460	800.190	-.03663	.07077	-.01523	.00201	.00014	.00019	.24430	-.01276	-.01274	-.01184
200.400	900.330	-.04844	.07329	-.01138	.00121	.00025	-.00010	.42516	-.01291	-.01287	-.01211
200.530	1000.200	-.04830	.07406	-.01136	.00133	.00025	-.00010	.42474	-.01339	-.01329	-.01268
	GRADIENT	.00000	.00000	.00000	.00000	.00000	.00000	.00000	.00000	.00000	.00000

RUN NO. 378/ 0 GRADIENT INTERVAL = -5.00/ 5.00

DLT-X	DLT-Z	CN	CA	CLM	CY	CYN	CBL	XCP/L	CPB1	CPB2	CPBC
400.450	750.280	-.04843	.07193	-.01137	.00124	.00026	-.00011	.42525	-.01424	-.01413	-.01307
400.530	800.340	-.04845	.07194	-.01138	.00123	.00025	-.00010	.42509	-.01492	-.01482	-.01392
400.560	900.370	-.04853	.07372	-.01135	.00126	.00024	-.00010	.42602	-.01447	-.01441	-.01351
400.490	1000.200	-.04844	.07348	-.01136	.00116	.00025	-.00010	.42553	-.01378	-.01374	-.01276
	GRADIENT	.00000	.00000	.00000	.00000	.00000	.00000	.00000	.00000	.00000	.00000

ORIGINAL PAGE IS OF POOR QUALITY

AEDC VA422(IA17) ORB AND ET SEPARATING(ORB DATA) (RTR406) (24 JUL 75)

REFERENCE DATA

SREF = 2690.0000 SQ.FT. XMRP = 1089.6000 IN. XO
LREF = 1290.3000 IN. YMRP = .0000 IN. YO
BREF = 1290.3000 IN. ZMRP = 375.0000 IN. ZO
SCALE = .0100

PARAMETRIC DATA

DLT-Y = 200.000 ALPHA = .000
BETA = 3.000 DLTALF = .000
DLTBTA = 3.000 MACH = 5.930
AILRON = .000 ELEVON = .000
GRID = 3.000

RUN NO. 159/ 0 GRADIENT INTERVAL = -5.00/ 5.00

DLT-X	DLT-Z	CN	CA	CLM	CY	CYN	CBL	XCP/L	CPB1	CPB2	CPBC
.624	18.837	.02223	.08987	-.00658	-.03208	.00228	-.00016	.95613	-.02751	-.02739	-.02670
.564	100.330	.01278	.08367	.00011	-.02401	.00400	-.00244	.65148	-.02780	-.02766	-.02704
.591	199.630	.02086	.08221	-.00444	-.02711	-.00047	-.00177	.87292	-.02791	-.02777	-.02710
.746	298.860	.01209	.08131	-.01324	-.02529	-.00266	.00215	1.75520	-.02794	-.02778	-.02708
.655	399.040	-.00542	.07737	-.01749	-.03034	-.00230	.00524	-2.58320	-.02791	-.02775	-.02702
.597	499.230	-.04863	.07709	-.01142	-.03333	-.00168	.00008	.42513	-.02785	-.02772	-.02696
.703	600.100	-.05114	.07801	-.01062	-.03374	-.00158	.00003	.45225	-.02773	-.02760	-.02682
	GRADIENT	.00000	.00000	.00000	.00000	.00000	.00000	.00000	.00000	.00000	.00000

AEDC VA422(IA17) ORB AND ET SEPARATING(ORB DATA) (RTR406) (24 JUL 75)

REFERENCE DATA

SREF = 2690.0000 SQ.FT. XMRP = 1089.6000 IN. XO
LREF = 1290.3000 IN. YMRP = .0000 IN. YO
BREF = 1290.3000 IN. ZMRP = 375.0000 IN. ZO
SCALE = .0100

PARAMETRIC DATA

DLT-Y = 200.000 ALPHA = .000
BETA = 3.000 DLTALF = .000
DLTBTA = 3.000 MACH = 5.930
AILRON = .000 ELEVON = .000
GRID = 3.000

RUN NO. 158/ 0 GRADIENT INTERVAL = -5.00/ 5.00

DLT-X	DLT-Z	CN	CA	CLM	CY	CYN	CBL	XCP/L	CPB1	CPB2	CPBC
200.550	20.926	.03013	.08455	.00029	-.02154	.00585	-.00198	.65032	-.02745	-.02744	-.02660
200.500	101.170	.01619	.08202	.00028	-.02605	.00124	-.00254	.64270	-.02767	-.02768	-.02696
200.570	201.310	.02061	.08144	-.00925	-.02467	-.00201	.00043	1.10890	-.02772	-.02774	-.02703
200.630	301.480	.01077	.08119	-.01694	-.02632	-.00302	.00463	2.23350	-.02785	-.02785	-.02716
200.570	400.360	-.03247	.07616	-.01468	-.03233	-.00180	.00163	.20789	-.02792	-.02792	-.02728
200.580	500.150	-.05130	.07787	-.01066	-.03368	-.00160	.00003	.45212	-.02792	-.02792	-.02729
200.670	600.120	-.05138	.07813	-.01065	-.03365	-.00159	.00003	.45267	-.02787	-.02785	-.02722
	GRADIENT	.00000	.00000	.00000	.00000	.00000	.00000	.00000	.00000	.00000	.00000

AEDC VA422(IA17) ORB AND ET SEPARATING(ORB DATA) (RTR407) (24 JUL 75)

REFERENCE DATA

SREF = 2690.0000 SQ.FT. XMRP = 1089.6000 IN. XO
LREF = 1290.3000 IN. YMRP = .0000 IN. YO
BREF = 1290.3000 IN. ZMRP = 375.0000 IN. ZO
SCALE = .0100

PARAMETRIC DATA

DLT-Y = 200.000 ALPHA = .000
BETA = 3.000 DLTALF = -10.000
DLTBTA = 3.000 MACH = 5.930
AILRON = .000 ELEVON = .000
GRID = 3.000

RUN NO. 155/ 0 GRADIENT INTERVAL = -5.00/ 5.00

DLT-X	DLT-Z	CN	CA	CLM	CY	CYN	CBL	XCP/L	CPB1	CPB2	CPBC
.501	401.640	.10880	.07960	-.02819	-.01714	-.00389	.00728	.91913	-.02449	-.02460	-.02347
.644	497.910	.03320	.07837	-.02243	-.02652	-.00323	.00846	1.33580	-.02425	-.02435	-.02328
.577	598.350	-.03956	.07607	-.01369	-.03273	-.00180	.00060	.31394	-.02406	-.02417	-.02308
.554	750.060	-.05080	.07807	-.01073	-.03370	-.00158	.00002	.44887	-.02423	-.02429	-.02338
.679	800.130	-.05093	.07807	-.01073	-.03370	-.00159	.00002	.44939	-.02460	-.02465	-.02386
	GRADIENT	.00000	.00000	.00000	.00000	.00000	.00000	.00000	.00000	.00000	.00000

RUN NO. 154/ 0 GRADIENT INTERVAL = -5.00/ 5.00

DLT-X	DLT-Z	CN	CA	CLM	CY	CYN	CBL	XCP/L	CPB1	CPB2	CPBC
200.600	402.460	.05827	.07939	-.02386	-.02251	-.00365	.00832	1.06950	-.02625	-.02627	-.02559
200.490	500.630	-.01268	.07481	-.01869	-.03120	-.00205	.00341	-.81621	-.02641	-.02644	-.02586
200.470	600.210	-.05032	.07721	-.01094	-.03365	-.00162	.00004	.44248	-.02640	-.02644	-.02591
200.470	750.110	-.05127	.07807	-.01072	-.03381	-.00159	.00003	.45092	-.02591	-.02597	-.02542
200.490	800.190	-.05117	.07808	-.01071	-.03377	-.00158	.00003	.45066	-.02565	-.02571	-.02512
	GRADIENT	.00000	.00000	.00000	.00000	.00000	.00000	.00000	.00000	.00000	.00000

AEDC VA422(IA17) ORB AND ET SEPARATING(ORB DATA) (RTR407) (24 JUL 75)

REFERENCE DATA

SREF = 2690.0000 SQ.FT. XMRP = 1089.6000 IN. XO
LREF = 1290.3000 IN. YMRP = .0000 IN. YO
BREF = 1290.3000 IN. ZMRP = 375.0000 IN. ZO
SCALE = .0100

PARAMETRIC DATA

DLT-Y = 200.000 ALPHA = .000
BETA = 3.000 DLTALF = -10.000
DLTBTA = 3.000 MACH = 5.930
AILRON = .000 ELEVON = .000
GRID = 3.000

RUN NO. 153/ 0 GRADIENT INTERVAL = -5.00/ 5.00

DLT-X	DLT-Z	CN	CA	CLM	CY	CYN	CBL	XCP/L	CPB1	CPB2	CPBC
400.540	400.250	.03116	.07518	-.02395	-.02831	-.00268	.00852	1.42860	-.02417	-.02441	-.02311
400.480	498.470	-.04331	.07604	-.01288	-.03290	-.00176	.00027	.36257	-.02378	-.02402	-.02276
400.500	600.160	-.05059	.07762	-.01072	-.03379	-.00158	.00002	.44817	-.02374	-.02395	-.02278
400.540	750.080	-.05096	.07794	-.01072	-.03382	-.00159	.00002	.44966	-.02427	-.02440	-.02352
400.550	800.230	-.05106	.07799	-.01072	-.03380	-.00158	.00002	.44996	-.02470	-.02480	-.02403
	GRADIENT	.00000	.00000	.00000	.00000	.00000	.00000	.00000	.00000	.00000	.00000

AEDC VA422(IA17) ORB AND ET SEPARATING(ORB DATA) (RTR409) (24 JUL 75)

REFERENCE DATA

SREF = 2690.0000 SQ.FT. XMRP = 1089.6000 IN. XO
LREF = 1290.3000 IN. YMRP = .0000 IN. YO
BREF = 1290.3000 IN. ZMRP = 375.0000 IN. ZO
SCALE = .0100

PARAMETRIC DATA

DLT-Y = 200.000 ALPHA = .000
BETA = 3.000 DLTALF = -20.000
DLTBTA = 3.000 MACH = 5.930
AILRON = .000 ELEVON = .000
GRID = 3.000

RUN NO. 137/ 0 GRADIENT INTERVAL = -5.00/ 5.00

DLT-X	DLT-Z	CN	CA	CLM	CY	CYN	CBL	XCP/L	CPB1	CPB2	CPBC
.502	800.140	.06089	.07045	-.03445	-.02539	-.00255	.00568	1.22580	-.01890	-.01909	-.01805
.664	898.700	-.03883	.07588	-.01463	-.03161	-.00174	.00042	.28318	-.01885	-.01899	-.01790
.621	1000.300	-.05054	.07892	-.01064	-.03262	-.00155	.00007	.44940	-.01867	-.01882	-.01772
	GRADIENT	.00000	.00000	.00000	.00000	.00000	.00000	.00000	.00000	.00000	.00000

RUN NO. 135/ 0 GRADIENT INTERVAL = -5.00/ 5.00

DLT-X	DLT-Z	CN	CA	CLM	CY	CYN	CBL	XCP/L	CPB1	CPB2	CPBC
200.560	751.110	.01735	.06974	-.02810	-.02879	-.00223	.00181	2.27990	-.01593	-.01665	-.01501
200.610	799.740	-.03476	.07373	-.01571	-.03115	-.00176	.00055	.20792	-.01550	-.01605	-.01447
200.550	900.320	-.05051	.07817	-.01062	-.03261	-.00157	.00006	.44981	-.01508	-.01561	-.01412
200.510	1000.300	-.05036	.07930	-.01064	-.03271	-.00154	.00006	.44870	-.01570	-.01614	-.01505
	GRADIENT	.00000	.00000	.00000	.00000	.00000	.00000	.00000	.00000	.00000	.00000

AEDC VA422(IA17) ORB AND ET SEPARATING(ORB DATA) (RTR409) (24 JUL 75)

REFERENCE DATA

SREF = 2690.0000 SQ.FT. XMRP = 1089.6000 IN. XO
LREF = 1290.3000 IN. YMRP = .0000 IN. YO
BREF = 1290.3000 IN. ZMRP = 375.0000 IN. ZO
SCALE = .0100

PARAMETRIC DATA

DLT-Y = 200.000 ALPHA = .000
BETA = 3.000 DLTALF = -20.000
DLTBTA = 3.000 MACH = 5.930
AILRON = .000 ELEVON = .000
GRID = 3.000

RUN NO. 134/ 0 GRADIENT INTERVAL = -5.00/ 5.00

DLT-X	DLT-Z	CN	CA	CLM	CY	CYN	CBL	XCP/L	CPB1	CPB2	CPBC
400.480	750.350	-.05134	.07561	-.01050	-.03229	-.00165	.00000	.45554	-.02019	-.02042	-.01964
400.520	800.340	-.05095	.07703	-.01056	-.03264	-.00158	.00006	.45274	-.02062	-.02077	-.02035
400.470	900.400	-.05086	.07882	-.01062	-.03274	-.00156	.00006	.45111	-.01999	-.02015	-.01977
400.450	1000.200	-.05082	.07965	-.01066	-.03279	-.00155	.00006	.45015	-.01879	-.01900	-.01849
	GRADIENT	.00000	.00000	.00000	.00000	.00000	.00000	.00000	.00000	.00000	.00000

AEDC VA422(IA17) ORB AND ET SEPARATING(ORB DATA) (RTR410) (24 JUL 75)

REFERENCE DATA

SREF = 2690.0000 SQ.FT. XMRP = 1089.6000 IN. XO
LREF = 1290.3000 IN. YMRP = .0000 IN. YO
BREF = 1290.3000 IN. ZMRP = 375.0000 IN. ZO
SCALE = .0100

PARAMETRIC DATA

DLT-Y = 200.000 ALPHA = 5.000
BETA = .000 DLTALF = .000
DLTBTA = 3.000 MACH = 5.930
AILRON = .000 ELEVON = .000
GRID = 5.000

RUN NO. 237/ 0 GRADIENT INTERVAL = -5.00/ 5.00

DLT-X	DLT-Z	CN	CA	CLM	CY	CYN	CBL	XCP/L	CPB1	CPB2	CPBC
.553	17.560	.05188	.07280	-.00977	-.01161	.00032	-.00155	.84832	-.02948	-.02923	-.02859
.558	101.510	.08022	.07811	.00180	.00133	.00514	-.00351	.63005	-.02971	-.02950	-.02889
.592	201.310	.08566	.07377	.00656	.00162	.00338	-.00495	.58341	-.02995	-.02975	-.02915
.575	300.130	.11524	.07452	-.00205	.00380	.00065	-.00418	.67777	-.03007	-.02988	-.02926
.599	399.070	.12040	.07266	-.01195	.00787	-.00130	.00191	.75925	-.03015	-.02994	-.02930
.742	498.820	.09960	.06753	-.01597	.00384	-.00074	.00584	.82035	-.03021	-.02995	-.02927
.751	598.750	.04832	.06772	-.00893	.00159	-.00020	.00002	.64484	-.03014	-.02987	-.02914
	GRADIENT	.00000	.00000	.00000	.00000	.00000	.00000	.00000	.00000	.00000	.00000

RUN NO. 236/ 0 GRADIENT INTERVAL = -5.00/ 5.00

DLT-X	DLT-Z	CN	CA	CLM	CY	CYN	CBL	XCP/L	CPB1	CPB2	CPBC
200.470	19.882	.07520	.07507	.00292	.00193	.00622	-.00466	.62115	-.02908	-.02881	-.02806
200.670	99.753	.07712	.07184	.00797	.00278	.00484	-.00479	.55867	-.02903	-.02879	-.02804
200.600	200.680	.10767	.07400	.00155	.00242	.00165	-.00510	.64563	-.02891	-.02868	-.02790
200.630	300.830	.12274	.07328	-.00935	.00815	-.00103	.00014	.73621	-.02894	-.02870	-.02790
200.520	401.680	.11998	.07025	-.01644	.00641	-.00140	.00774	.79698	-.02894	-.02868	-.02789
200.670	500.180	.06058	.06697	-.01169	.00204	-.00029	.00098	.85304	-.02910	-.02883	-.02807
200.660	600.010	.04352	.06894	-.00735	.00095	-.00014	-.00004	.82887	-.02916	-.02889	-.02813
	GRADIENT	.00000	.00000	.00000	.00000	.00000	.00000	.00000	.00000	.00000	.00000

AEDC VA422(IA17) ORB AND ET SEPARATING(ORB DATA) (RTR411) (24 JUL 75)

REFERENCE DATA

SREF = 2690.0000 SQ.FT. XMRP = 1089.6000 IN. XO
LREF = 1290.3000 IN. YMRP = .0000 IN. YO
BREF = 1290.3000 IN. ZMRP = 375.0000 IN. ZO
SCALE = .0100

PARAMETRIC DATA

DLT-Y = 200.000 ALPHA = 5.000
BETA = .000 DLTALF = -10.000
DLTBTA = 3.000 MACH = 5.930
AILRON = .000 ELEVON = .000
GRID = 5.000

RUN NO. 233/ 0 GRADIENT INTERVAL = -5.00/ 5.00

DLT-X	DLT-Z	CN	CA	CLM	CY	CYN	CBL	XCP/L	CPB1	CPB2	CPBC
.557	401.310	.17722	.07531	-.00797	.00985	.00008	-.00242	.70498	-.02652	-.02660	-.02548
.605	498.540	.15887	.07345	-.01613	.01068	-.00169	.00385	.76157	-.02646	-.02649	-.02540
.510	598.500	.12660	.06796	-.01955	.00555	-.00114	.00867	.81441	-.02654	-.02653	-.02551
.548	748.310	.04488	.06870	-.00784	.00115	-.00013	-.00005	.83464	-.02660	-.02659	-.02550
.665	800.110	.04387	.06938	-.00744	.00112	-.00011	-.00004	.82957	-.02650	-.02650	-.02539
	GRADIENT	.00000	.00000	.00000	.00000	.00000	.00000	.00000	.00000	.00000	.00000

RUN NO. 232/ 0 GRADIENT INTERVAL = -5.00/ 5.00

DLT-X	DLT-Z	CN	CA	CLM	CY	CYN	CBL	XCP/L	CPB1	CPB2	CPBC
200.520	401.600	.16645	.07343	-.01386	.01172	-.00155	.00293	.74328	-.02711	-.02704	-.02608
200.430	502.200	.14731	.07146	-.02037	.00931	-.00213	.00994	.79829	-.02718	-.02709	-.02614
200.520	600.350	.07197	.06597	-.01421	.00251	-.00040	.00216	.85745	-.02748	-.02735	-.02651
200.590	750.140	.04391	.06947	-.00744	.00094	-.00013	-.00004	.82941	-.02733	-.02719	-.02647
200.620	800.150	.04390	.06966	-.00743	.00094	-.00013	-.00004	.82925	-.02702	-.02689	-.02613
	GRADIENT	.00000	.00000	.00000	.00000	.00000	.00000	.00000	.00000	.00000	.00000

RUN NO. 231/ 0 GRADIENT INTERVAL = -5.00/ 5.00

DLT-X	DLT-Z	CN	CA	CLM	CY	CYN	CBL	XCP/L	CPB1	CPB2	CPBC
400.510	399.350	.15978	.07349	-.01968	.01123	-.00225	.00887	.78316	-.02595	-.02595	-.02479
400.590	498.080	.09825	.06621	-.01841	.00381	-.00070	.00525	.84742	-.02591	-.02590	-.02472
400.540	599.130	.04581	.06825	-.00823	.00132	-.00015	-.00005	.83971	-.02584	-.02585	-.02465
400.560	750.170	.04393	.06967	-.00745	.00095	-.00013	-.00004	.82964	-.02586	-.02581	-.02472
400.660	800.030	.04375	.06974	-.00746	.00095	-.00013	-.00004	.83042	-.02618	-.02612	-.02514
	GRADIENT	.00000	.00000	.00000	.00000	.00000	.00000	.00000	.00000	.00000	.00000

AEDC VA422(1A17) ORB AND ET SEPARATING(ORB DATA) (RTR413) (24 JUL 75)

REFERENCE DATA

SREF =	2690.0000 SQ.FT.	XMRP =	1089.6000 IN. XO
LREF =	1290.3000 IN.	YMRP =	.0000 IN. YO
BREF =	1290.3000 IN.	ZMRP =	375.0000 IN. ZO
SCALE =	.0100		

PARAMETRIC DATA

DLT-Y =	200.000	ALPHA =	5.000
BETA =	.000	DLTALF =	-20.000
DLTBTA =	3.000	MACH =	5.930
AILRON =	.000	ELEVON =	.000
GRID =	5.000		

RUN NO. 227/ 0 GRADIENT INTERVAL = -5.00/ 5.00

DLT-X	DLT-Z	CN	CA	CLM	CY	CYN	CBL	XCP/L	CPB1	CPB2	CPBC
.431	800.100	.15260	.08001	-.03445	.00663	-.00132	.00884	.88579	-.02143	-.02184	-.02031
.584	899.110	.04729	.06715	-.00886	.00139	-.00017	-.00007	.84733	-.02156	-.02195	-.02046
.639	1000.300	.04377	.06848	-.00744	.00096	-.00011	-.00004	.82994	-.02153	-.02190	-.02043
	GRADIENT	.00000	.00000	.00000	.00000	.00000	.00000	.00000	.00000	.00000	.00000

RUN NO. 225/ 0 GRADIENT INTERVAL = -5.00/ 5.00

DLT-X	DLT-Z	CN	CA	CLM	CY	CYN	CBL	XCP/L	CPB1	CPB2	CPBC
200.400	750.680	.08712	.06253	-.01908	.00319	-.00046	.00228	.87899	-.02426	-.02433	-.02329
200.520	799.920	.05093	.06619	-.00987	.00163	-.00019	.00004	.85387	-.02374	-.02382	-.02270
200.500	900.340	.04395	.06841	-.00741	.00099	-.00010	-.00004	.82860	-.02328	-.02344	-.02218
200.580	1000.300	.04415	.06944	-.00748	.00092	-.00011	-.00004	.82891	-.02318	-.02334	-.02220
	GRADIENT	.00000	.00000	.00000	.00000	.00000	.00000	.00000	.00000	.00000	.00000

RUN NO. 224/ 0 GRADIENT INTERVAL = -5.00/ 5.00

DLT-X	DLT-Z	CN	CA	CLM	CY	CYN	CBL	XCP/L	CPB1	CPB2	CPBC
400.500	750.240	.04521	.06749	-.00795	.00114	-.00012	-.00006	.83575	-.02501	-.02503	-.02438
400.390	800.210	.04387	.06840	-.00740	.00090	-.00010	-.00004	.82874	-.02478	-.02483	-.02425
400.560	900.290	.04400	.06941	-.00745	.00094	-.00011	-.00004	.82924	-.02421	-.02430	-.02367
400.510	1000.100	.04389	.06942	-.00745	.00089	-.00010	-.00004	.82977	-.02345	-.02360	-.02288
	GRADIENT	.00000	.00000	.00000	.00000	.00000	.00000	.00000	.00000	.00000	.00000

AEDC VA422(IA17) ORB AND ET SEPARATING(ORB DATA) (RTR414) (24 JUL 75)

REFERENCE DATA

SREF = 2690.0000 SQ.FT. XMRP = 1089.6000 IN. XO
LREF = 1290.3000 IN. YMRP = .0000 IN. YO
BREF = 1290.3000 IN. ZMRP = 375.0000 IN. ZO
SCALE = .0100

PARAMETRIC DATA

DLT-Y = 200.000 ALPHA = 5.000
BETA = 3.000 DLTALF = .000
DLTBTA = 3.000 MACH = 5.930
AILRON = .000 ELEVON = .000
GRID = 4.000

RUN NO. 197/ 0 GRADIENT INTERVAL = -5.00/ 5.00

DLT-X	DLT-Z	CN	CA	CLM	CY	CYN	CBL	XCP/L	CPB1	CPB2	CPBC
.578	20.218	.06107	.07029	-.01186	-.04185	-.00263	-.00400	.85421	-.02972	-.02963	-.02912
.661	101.360	.06188	.08069	.00065	-.03700	.00097	-.00536	.64949	-.02998	-.02992	-.02944
.630	201.730	.09406	.07568	.00801	-.03588	.00084	-.00677	.57489	-.03021	-.03016	-.02967
.687	300.100	.12592	.07437	-.00186	-.03046	-.00111	-.00595	.67478	-.03034	-.03032	-.02979
.742	398.740	.12750	.07205	-.01306	-.02429	-.00297	.00003	.76242	-.03041	-.03036	-.02981
.786	498.580	.09991	.06693	-.01644	-.02694	-.00258	.00451	.82459	-.03042	-.03036	-.02977
.698	598.820	.04937	.06714	-.00949	-.02909	-.00224	-.00084	.85212	-.03037	-.03030	-.02968
	GRADIENT	.00000	.00000	.00000	.00000	.00000	.00000	.00000	.00000	.00000	.00000

RUN NO. 196/ 0 GRADIENT INTERVAL = -5.00/ 5.00

DLT-X	DLT-Z	CN	CA	CLM	CY	CYN	CBL	XCP/L	CPB1	CPB2	CPBC
200.590	19.461	.07719	.07915	.00367	-.03516	.00217	-.00720	.61252	-.02917	-.02905	-.02837
200.690	99.989	.08778	.07458	.00969	-.03361	.00124	-.00695	.54965	-.02919	-.02910	-.02842
200.740	200.800	.11925	.07438	.00276	-.03146	-.00060	-.00701	.63689	-.02906	-.02899	-.02827
200.620	301.260	.13442	.07305	-.01024	-.02488	-.00262	-.00197	.73615	-.02906	-.02898	-.02824
200.790	401.650	.12111	.06894	-.01756	-.02520	-.00301	.00583	.80499	-.02915	-.02906	-.02833
200.600	500.220	.06201	.06633	-.01204	-.02874	-.00227	.00009	.85415	-.02928	-.02916	-.02845
200.670	599.990	.04376	.06836	-.00768	-.02988	-.00211	-.00099	.83542	-.02937	-.02926	-.02858
	GRADIENT	.00000	.00000	.00000	.00000	.00000	.00000	.00000	.00000	.00000	.00000

AEDC VA422(IA17) ORB AND ET SEPARATING(ORB DATA) (RTR415) (24 JUL 75)

REFERENCE DATA

SREF = 2690.0000 SQ.FT. XMRP = 1089.6000 IN. XO
LREF = 1290.3000 IN. YMRP = .0000 IN. YO
BREF = 1290.3000 IN. ZMRP = 375.0000 IN. ZO
SCALE = .0100

PARAMETRIC DATA

DLT-Y = 200.000 ALPHA = 5.000
BETA = 3.000 DLTALF = -10.000
DLTBTA = 3.000 MACH = 5.930
AILRON = .000 ELEVON = .000
GRID = 4.000

RUN NO. 193/ 0 GRADIENT INTERVAL = -5.00/ 5.00

DLT-X	DLT-Z	CN	CA	CLM	CY	CYN	CBL	XCP/L	CPB1	CPB2	CPBC
.608	401.490	.19362	.07513	-.00894	-.02585	-.00148	-.00469	.70615	-.02725	-.02734	-.02627
.512	498.160	.16606	.07306	-.01738	-.02185	-.00322	.00167	.76468	-.02708	-.02717	-.02613
.609	598.260	.12663	.06729	-.02070	-.02498	-.00301	.00746	.82348	-.02710	-.02719	-.02622
.572	748.370	.04463	.06823	-.00810	-.02966	-.00215	-.00102	.84147	-.02716	-.02725	-.02626
.713	800.110	.04423	.06866	-.00777	-.02999	-.00209	-.00100	.83557	-.02711	-.02721	-.02625
	GRADIENT	.00000	.00000	.00000	.00000	.00000	.00000	.00000	.00000	.00000	.00000

RUN NO. 192/ 0 GRADIENT INTERVAL = -5.00/ 5.00

DLT-X	DLT-Z	CN	CA	CLM	CY	CYN	CBL	XCP/L	CPB1	CPB2	CPBC
200.550	402.150	.17830	.07304	-.01507	-.02195	-.00291	.00037	.74450	-.02803	-.02802	-.02717
200.520	501.950	.14793	.07011	-.02192	-.02247	-.00370	.00810	.80818	-.02814	-.02812	-.02727
200.600	600.490	.07252	.06570	-.01427	-.02808	-.00233	.00116	.85673	-.02832	-.02827	-.02751
200.610	750.090	.04418	.06867	-.00777	-.02999	-.00209	-.00100	.83578	-.02824	-.02818	-.02751
200.640	800.020	.04415	.06892	-.00778	-.02995	-.00208	-.00100	.83620	-.02807	-.02802	-.02732
	GRADIENT	.00000	.00000	.00000	.00000	.00000	.00000	.00000	.00000	.00000	.00000

RUN NO. 191/ 0 GRADIENT INTERVAL = -5.00/ 5.00

DLT-X	DLT-Z	CN	CA	CLM	CY	CYN	CBL	XCP/L	CPB1	CPB2	CPBC
400.540	399.450	.16536	.07220	-.02199	-.02084	-.00378	.00699	.79297	-.02778	-.02771	-.02694
400.620	498.010	.09809	.06576	-.01855	-.02705	-.00252	.00369	.84912	-.02770	-.02763	-.02683
400.680	599.250	.04587	.06784	-.00849	-.02938	-.00218	-.00102	.84500	-.02763	-.02758	-.02675
400.610	750.190	.04419	.06892	-.00779	-.02998	-.00209	-.00100	.83626	-.02754	-.02748	-.02665
400.600	800.060	.04407	.06886	-.00779	-.02998	-.00209	-.00100	.83685	-.02770	-.02763	-.02687
	GRADIENT	.00000	.00000	.00000	.00000	.00000	.00000	.00000	.00000	.00000	.00000

AEDC VA422(IA17) ORB AND ET SEPARATING(ORB DATA) (RTR417) (24 JUL 75)

REFERENCE DATA

SREF = 2690.0000 SQ.FT. XMRP = 1089.6000 IN. XO
LREF = 1290.3000 IN. YMRP = .0000 IN. YO
BREF = 1290.3000 IN. ZMRP = 375.0000 IN. ZO
SCALE = .0100

PARAMETRIC DATA

DLT-Y = 200.000 ALPHA = 5.000
BETA = 3.000 DLTALF = -20.000
DLTBTA = 3.000 MACH = 5.930
AILRON = .000 ELEVON = .000
GRID = 4.000

RUN NO. 187/ 0 GRADIENT INTERVAL = -5.00/ 5.00

DLT-X	DLT-Z	CN	CA	CLM	CY	CYN	CBL	XCP/L	CPB1	CPB2	CPBC
.583	800.240	.16137	.05843	-.03741	-.02439	-.00299	.00564	.89186	-.02311	-.02327	-.02206
.646	899.040	.04959	.06564	-.00998	-.02897	-.00222	-.00101	.86119	-.02291	-.02309	-.02184
.577	1000.300	.04405	.06797	-.00779	-.02996	-.00208	-.00100	.83685	-.02258	-.02278	-.02146
	GRADIENT	.00000	.00000	.00000	.00000	.00000	.00000	.00000	.00000	.00000	.00000

RUN NO. 185/ 0 GRADIENT INTERVAL = -5.00/ 5.00

DLT-X	DLT-Z	CN	CA	CLM	CY	CYN	CBL	XCP/L	CPB1	CPB2	CPBC
200.550	750.790	.09598	.06036	-.02197	-.02722	-.00247	.00142	.88885	-.02452	-.02477	-.02351
200.570	799.880	.05125	.06497	-.01015	-.02859	-.00229	-.00092	.85804	-.02365	-.02399	-.02254
200.620	900.300	.04422	.06735	-.00770	-.02989	-.00208	-.00100	.83420	-.02287	-.02324	-.02172
200.690	1000.300	.04438	.06836	-.00779	-.02999	-.00207	-.00100	.83552	-.02275	-.02306	-.02170
	GRADIENT	.00000	.00000	.00000	.00000	.00000	.00000	.00000	.00000	.00000	.00000

RUN NO. 184/ 0 GRADIENT INTERVAL = -5.00/ 5.00

DLT-X	DLT-Z	CN	CA	CLM	CY	CYN	CBL	XCP/L	CPB1	CPB2	CPBC
400.550	750.250	.04510	.06656	-.00820	-.02938	-.00217	-.00107	.84190	-.02577	-.02589	-.02511
400.640	800.260	.04416	.06758	-.00772	-.02989	-.00207	-.00100	.83487	-.02571	-.02583	-.02511
400.500	900.330	.04431	.06822	-.00776	-.03003	-.00207	-.00100	.83511	-.02546	-.02556	-.02485
400.610	1000.200	.04383	.06768	-.00774	-.03000	-.00207	-.00100	.83669	-.02521	-.02529	-.02463
	GRADIENT	.00000	.00000	.00000	.00000	.00000	.00000	.00000	.00000	.00000	.00000

AEDC VA422(IA17) ORB AND ET SEPARATING(ORB DATA) (RTRN18) (24 JUL 75)

REFERENCE DATA

SREF = 2690.0000 SQ.FT. XMRP = 1089.6000 IN. XO
LREF = 1290.3000 IN. YMRP = .0000 IN. YO
BREF = 1290.3000 IN. ZMRP = 375.0000 IN. ZO
SCALE = .0100

PARAMETRIC DATA

DLT-Y = 200.000 ALPHA = -5.000
BETA = .000 DLTALF = .000
DLTBTA = 3.000 MACH = 5.930
AILRON = .000 ELEVON = .000
GRID = 6.000

RUN NO. 277/ 0 GRADIENT INTERVAL = -5.00/ 5.00

DLT-X	DLT-Z	CN	CA	CLM	CY	CYN	CBL	XCP/L	CPB1	CPB2	CPBC
.555	19.767	-.04539	.10521	-.00913	.02247	.00772	.00332	.45880	-.02725	-.02591	-.02519
.611	99.243	-.06366	.09613	-.00766	.02222	.00444	.00031	.53972	-.02751	-.02609	-.02547
.560	199.030	-.07397	.09506	-.01284	.01366	-.00133	.00122	.48644	-.02756	-.02606	-.02538
.584	298.910	-.09322	.08953	-.01878	.00428	-.00035	.00310	.45856	-.02743	-.02592	-.02520
.555	399.130	-.13120	.08891	-.01576	.00224	-.00011	.00027	.53987	-.02735	-.02592	-.02521
.464	500.010	-.13780	.08972	-.01406	.00201	-.00008	-.00001	.55793	-.02734	-.02596	-.02527
.614	600.080	-.13783	.08986	-.01406	.00203	-.00007	-.00001	.55798	-.02738	-.02606	-.02542
	GRADIENT	.00000	.00000	.00000	.00000	.00000	.00000	.00000	.00000	.00000	.00000

RUN NO. 276/ 0 GRADIENT INTERVAL = -5.00/ 5.00

DLT-X	DLT-Z	CN	CA	CLM	CY	CYN	CBL	XCP/L	CPB1	CPB2	CPBC
200.460	21.510	-.04821	.09739	-.00570	.02899	.00806	.00219	.54169	-.02730	-.02631	-.02544
200.540	101.410	-.06653	.09420	-.00794	.01808	.00069	.00095	.54065	-.02771	-.02678	-.02612
200.560	201.880	-.07333	.09495	-.01631	.01119	-.00160	.00268	.43760	-.02780	-.02687	-.02626
200.520	300.570	-.11105	.08870	-.01803	.00330	-.00013	.00115	.49764	-.02785	-.02693	-.02636
200.510	400.160	-.13636	.08923	-.01455	.00219	-.00010	.00008	.55327	-.02784	-.02693	-.02643
200.630	500.170	-.13796	.08994	-.01408	.00214	-.00008	-.00001	.55796	-.02775	-.02684	-.02632
200.520	599.970	-.13822	.09002	-.01409	.00214	-.00008	-.00001	.55808	-.02759	-.02668	-.02614
	GRADIENT	.00000	.00000	.00000	.00000	.00000	.00000	.00000	.00000	.00000	.00000

AEDC VA422(IA17) ORB AND ET SEPARATING(ORB DATA) (RTR419) (24 JUL 75)

REFERENCE DATA

SREF = 2690.0000 SQ.FT. XMRP = 1089.6000 IN. XO
LREF = 1290.3000 IN. YMRP = .0000 IN. YO
BREF = 1290.3000 IN. ZMRP = 375.0000 IN. ZO
SCALE = .0100

PARAMETRIC DATA

DLT-Y = 200.000 ALPHA = -5.000
BETA = .000 DLTALF = -10.000
DLTBTA = 3.000 MACH = 5.930
AILRON = .000 ELEVON = .000
GRID = 6.000

RUN NO. 273/ 0 GRADIENT INTERVAL = -5.00/ 5.00

DLT-X	DLT-Z	CN	CA	CLM	CY	CYN	CBL	XCP/L	CPB1	CPB2	CPBC
.469	402.560	.04259	.08645	-.04242	.01294	-.00213	.01227	1.65610	-.02162	-.02087	-.01970
.525	497.160	-.10250	.08544	-.02264	.00330	-.00019	.00107	.43913	-.02150	-.02072	-.01967
.490	599.740	-.13716	.08911	-.01426	.00214	-.00007	.00000	.55604	-.02110	-.02032	-.01914
.515	750.220	-.13741	.09021	-.01418	.00212	-.00008	-.00001	.55695	-.02160	-.02083	-.02004
.410	800.120	-.13749	.09020	-.01415	.00205	-.00008	-.00001	.55709	-.02232	-.02154	-.02092
	GRADIENT	.00000	.00000	.00000	.00000	.00000	.00000	.00000	.00000	.00000	.00000

RUN NO. 272/ 0 GRADIENT INTERVAL = -5.00/ 5.00

DLT-X	DLT-Z	CN	CA	CLM	CY	CYN	CBL	XCP/L	CPB1	CPB2	CPBC
200.380	401.860	-.05675	.08385	-.02873	.00585	-.00059	.00431	.15373	-.02529	-.02452	-.02365
200.460	500.410	-.12721	.08672	-.01678	.00263	-.00011	.00046	.52809	-.02609	-.02534	-.02488
200.580	600.170	-.13761	.08979	-.01413	.00207	-.00008	-.00001	.55731	-.02596	-.02522	-.02487
200.520	750.230	-.13777	.09022	-.01414	.00218	-.00007	-.00001	.55734	-.02530	-.02456	-.02417
200.560	800.130	-.13789	.09029	-.01416	.00206	-.00008	-.00001	.55729	-.02490	-.02418	-.02374
	GRADIENT	.00000	.00000	.00000	.00000	.00000	.00000	.00000	.00000	.00000	.00000

RUN NO. 271/ 0 GRADIENT INTERVAL = -5.00/ 5.00

DLT-X	DLT-Z	CN	CA	CLM	CY	CYN	CBL	XCP/L	CPB1	CPB2	CPBC
400.330	399.970	-.10321	.08605	-.02087	.00384	-.00024	.00124	.45784	-.02279	-.02215	-.02082
400.350	499.780	-.13593	.08918	-.01456	.00227	-.00008	.00008	.55292	-.02195	-.02133	-.01995
400.460	600.060	-.13712	.09016	-.01415	.00215	-.00006	-.00001	.55680	-.02195	-.02130	-.02016
400.520	750.250	-.13757	.09027	-.01415	.00214	-.00006	-.00001	.55711	-.02302	-.02236	-.02161
400.430	800.150	-.13766	.09025	-.01415	.00210	-.00007	-.00001	.55720	-.02363	-.02294	-.02231
	GRADIENT	.00000	.00000	.00000	.00000	.00000	.00000	.00000	.00000	.00000	.00000

ORIGINAL PAGE IS OF POOR QUALITY

AEDC VA422(IA17) ORB AND ET SEPARATING(ORB DATA) (RTR421) (24 JUL 75)

REFERENCE DATA

SREF = 2690.0000 SQ.FT. XMRP = 1089.6000 IN. XO
LREF = 1290.3000 IN. YMRP = .0000 IN. YO
BREF = 1290.3000 IN. ZMRP = 375.0000 IN. ZO
SCALE = .0100

PARAMETRIC DATA

DLT-Y = 200.000 ALPHA = -5.000
BETA = .000 DLTALF = -20.000
DLTBTA = 3.000 MACH = 5.930
AILRON = .000 ELEVON = .000
GRID = 6.000

RUN NO. 267/ 0 GRADIENT INTERVAL = -5.00/ 5.00

DLT-X	DLT-Z	CN	CA	CLM	CY	CYN	CBL	XCP/L	CPB1	CPB2	CPBC
.416	799.000	.01999	.08280	-.03916	.00818	-.00127	.00536	2.61900	-.01650	-.01599	-.01529
.553	897.530	-.09851	.08419	-.02404	.00419	-.00041	.00105	.41594	-.01671	-.01615	-.01539
.434	1000.100	-.13695	.08851	-.01429	.00221	-.00005	-.00000	.55568	-.01636	-.01578	-.01493
	GRADIENT	.00000	.00000	.00000	.00000	.00000	.00000	.00000	.00000	.00000	.00000

RUN NO. 265/ 0 GRADIENT INTERVAL = -5.00/ 5.00

DLT-X	DLT-Z	CN	CA	CLM	CY	CYN	CBL	XCP/L	CPB1	CPB2	CPBC
200.470	754.700	.08443	.07498	-.04778	.01017	-.00200	.00775	1.22580	-.00538	-.00399	-.00252
200.430	796.720	-.06180	.08048	-.02981	.00603	-.00095	.00131	.17760	-.00607	-.00468	-.00361
200.470	899.200	-.13542	.08699	-.01467	.00236	-.00007	.00014	.55167	-.00659	-.00535	-.00453
200.420	1000.400	-.13707	.08904	-.01417	.00200	-.00006	-.00001	.55664	-.00796	-.00688	-.00642
	GRADIENT	.00000	.00000	.00000	.00000	.00000	.00000	.00000	.00000	.00000	.00000

RUN NO. 264/ 0 GRADIENT INTERVAL = -5.00/ 5.00

DLT-X	DLT-Z	CN	CA	CLM	CY	CYN	CBL	XCP/L	CPB1	CPB2	CPBC
400.370	750.710	-.11487	.08085	-.01753	.00394	-.00024	.00081	.50711	-.01215	-.01235	-.01038
400.390	800.420	-.12965	.08343	-.01558	.00283	-.00014	.00046	.53984	-.01567	-.01539	-.01470
400.470	900.330	-.13687	.08758	-.01430	.00201	-.00005	-.00002	.55555	-.01566	-.01534	-.01512
400.350	1000.300	-.13717	.08996	-.01415	.00192	-.00005	-.00001	.55684	-.01376	-.01352	-.01315
	GRADIENT	.00000	.00000	.00000	.00000	.00000	.00000	.00000	.00000	.00000	.00000

AEDC VA422(IA17) ORB AND ET SEPARATING(ORB DATA) (RTR422) (24 JUL 75)

REFERENCE DATA

SREF = 2690.0000 SQ.FT. XMRP = 1089.6000 IN. XO
LREF = 1290.3000 IN. YMRP = .0000 IN. YO
BREF = 1290.3000 IN. ZMRP = 375.0000 IN. ZO
SCALE = .0100

PARAMETRIC DATA

DLT-Y = 200.000 ALPHA = -5.000
BETA = 3.000 DLTALF = .000
DLTBTA = 3.000 MACH = 5.930
AILRON = .000 ELEVON = .000
GRID = 7.000

RUN NO. 315/ 0 GRADIENT INTERVAL = -5.00/ 5.00

DLT-X	DLT-Z	CN	CA	CLM	CY	CYN	CBL	XCP/L	CPB1	CPB2	CPBC
.596	20.165	-.03320	.10526	-.00672	-.02024	.00659	.00278	.45774	-.02621	-.02582	-.02500
.582	98.705	-.05831	.09531	-.00796	-.02222	.00298	.00071	.52348	-.02631	-.02585	-.02510
.707	198.770	-.07703	.09432	-.01326	-.02779	-.00184	.00229	.48792	-.02623	-.02571	-.02489
.702	298.770	-.09589	.09026	-.01921	-.03577	-.00161	.00443	.45969	-.02606	-.02552	-.02470
.590	399.230	-.13383	.08942	-.01548	-.03889	-.00114	.00105	.54430	-.02602	-.02551	-.02471
.663	500.070	-.13917	.09036	-.01422	-.03919	-.00108	.00069	.55783	-.02602	-.02555	-.02479
.627	600.250	-.13900	.09037	-.01420	-.03915	-.00108	.00069	.55788	-.02616	-.02573	-.02504
	GRADIENT	.00000	.00000	.00000	.00000	.00000	.00000	.00000	.00000	.00000	.00000

RUN NO. 314/ 0 GRADIENT INTERVAL = -5.00/ 5.00

DLT-X	DLT-Z	CN	CA	CLM	CY	CYN	CBL	XCP/L	CPB1	CPB2	CPBC
200.600	21.696	-.03780	.09686	-.00581	-.01602	.00622	.00197	.50638	-.02661	-.02641	-.02547
200.530	101.760	-.06363	.09431	-.00802	-.02345	-.00023	.00165	.53392	-.02713	-.02692	-.02619
200.650	201.850	-.07801	.09434	-.01659	-.02980	-.00228	.00334	.44729	-.02727	-.02705	-.02639
200.580	300.590	-.11333	.08900	-.01833	-.03753	-.00124	.00237	.49829	-.02736	-.02711	-.02648
200.540	400.130	-.13785	.08987	-.01464	-.03895	-.00111	.00083	.55382	-.02731	-.02708	-.02647
200.640	500.110	-.13948	.09046	-.01421	-.03916	-.00108	.00069	.55812	-.02716	-.02691	-.02632
200.680	600.120	-.13951	.09049	-.01422	-.03918	-.00108	.00069	.55811	-.02700	-.02675	-.02613
	GRADIENT	.00000	.00000	.00000	.00000	.00000	.00000	.00000	.00000	.00000	.00000

AEDC VA422(IA17) ORB AND ET SEPARATING(ORB DATA) (RTR423) (24 JUL 75)

REFERENCE DATA

SREF = 2690.0000 SQ.FT. XMRP = 1089.6000 IN. XO
LREF = 1290.3000 IN. YMRP = .0000 IN. YO
BREF = 1290.3000 IN. ZMRP = 375.0000 IN. ZO
SCALE = .0100

PARAMETRIC DATA

DLT-Y = 200.000 ALPHA = -5.000
BETA = 3.000 DLTALF = -10.000
DLTBTA = 3.000 MACH = 5.930
AILRON = .000 ELEVON = .000
GRID = 7.000

RUN NO. 311/ 0 GRADIENT INTERVAL = -5.00/ 5.00

DLT-X	DLT-Z	CN	CA	CLM	CY	CYN	CBL	XCP/L	CPB1	CPB2	CPBC
.461	402.300	.03816	.08798	-.04317	-.02600	-.00361	.01334	1.79130	-.02087	-.02114	-.01954
.585	497.250	-.10223	.08519	-.02380	-.03699	-.00141	.00225	.42725	- 02072	-.02096	-.01944
.485	599.870	-.13827	.08929	-.01439	-.03895	-.00109	.00072	.55592	-.02010	-.02035	-.01873
.560	750.170	-.13867	.09064	-.01429	-.03907	-.00108	.00069	.55694	-.02065	-.02075	-.01965
.512	800.180	-.13883	.09070	-.01429	-.03915	-.00108	.00069	.55710	-.02143	-.02148	-.02060
	GRADIENT	.00000	.00000	.00000	.00000	.00000	.00000	.00000	.00000	.00000	.00000

RUN NO. 310/ 0 GRADIENT INTERVAL = -5.00/ 5.00

DLT-X	DLT-Z	CN	CA	CLM	CY	CYN	CBL	XCP/L	CPB1	CPB2	CPBC
200.500	401.810	-.05443	.08370	-.03086	-.03419	-.00178	.00605	.09318	-.02443	-.02445	-.02339
200.540	500.450	-.13059	.08711	-.01638	-.03837	-.00119	.00119	.53457	-.02543	-.02536	-.02479
200.480	600.100	-.13919	.09003	-.01426	-.03908	-.00108	.00068	.55759	-.02531	-.02526	-.02482
200.610	750.260	-.13927	.09077	-.01430	-.03914	-.00106	.00069	.55736	-.02456	-.02455	-.02407
200.610	800.080	-.13911	.09073	-.01428	-.03922	-.00107	.00069	.55737	-.02412	-.02412	-.02360
	GRADIENT	.00000	.00000	.00000	.00000	.00000	.00000	.00000	.00000	.00000	.00000

RUN NO. 309/ 0 GRADIENT INTERVAL = -5.00/ 5.00

DLT-X	DLT-Z	CN	CA	CLM	CY	CYN	CBL	XCP/L	CPB1	CPB2	CPBC
400.400	400.000	-.10528	.08635	-.02094	-.03682	-.00135	.00243	.46107	-.02124	-.02163	-.02005
400.370	499.680	-.13673	.08959	-.01476	-.03893	-.00110	.00085	.55205	-.02034	-.02076	-.01916
400.330	600.040	-.13838	.09056	-.01428	-.03909	-.00109	.00068	.55678	-.02053	-.02084	-.01957
400.520	750.210	-.13877	.09064	-.01428	-.03915	-.00108	.00069	.55713	-.02191	-.02205	-.02123
400.560	800.110	-.13881	.09066	-.01428	-.03905	-.00107	.00069	.55715	-.02260	-.02271	-.02201
	GRADIENT	.00000	.00000	.00000	.00000	.00000	.00000	.00000	.00000	.00000	.00000

AEDC VA422(IA17) ORB AND ET SEPARATING(ORB DATA) (RTR425) (24 JUL 75)

REFERENCE DATA

SREF = 2690.0000 SQ.FT. XMRP = 1089.6000 IN. XO
LREF = 1290.3000 IN. YMRP = .0000 IN. YO
BREF = 1290.3000 IN. ZMRP = 375.0000 IN. ZO
SCALE = .0100

PARAMETRIC DATA

DLT-Y = 200.000 ALPHA = -5.000
BETA = 3.000 DLTALF = -20.000
DLTBTA = 3.000 MACH = 5.930
AILRON = .000 ELEVON = .000
GRID = 7.000

RUN NO. 305/ 0 GRADIENT INTERVAL = -5.00/ 5.00

DLT-X	DLT-Z	CN	CA	CLM	CY	CYN	CBL	XCP/L	CPB1	CPB2	CPBC
.403	799.850	.03962	.08272	-.04087	-.02871	-.00222	.00895	1.69170	-.01644	-.01672	-.01544
.584	897.000	-.10030	.08443	-.02354	-.03610	-.00155	.00231	.42531	-.01627	-.01653	-.01515
.573	1000.000	-.13745	.08883	-.01458	-.03890	-.00108	.00077	.55396	-.01580	-.01606	-.01465
	GRADIENT	.00000	.00000	.00000	.00000	.00000	.00000	.00000	.00000	.00000	.00000

RUN NO. 303/ 0 GRADIENT INTERVAL = -5.00/ 5.00

DLT-X	DLT-Z	CN	CA	CLM	CY	CYN	CBL	XCP/L	CPB1	CPB2	CPBC
200.280	754.830	.10149	.07473	-.04971	-.02354	-.00102	.01106	1.14980	-.00484	-.00394	-.00189
200.470	797.170	-.04330	.07930	-.03162	-.03337	-.00204	.00340	-.07011	-.00555	-.00433	-.00264
200.490	898.690	-.13474	.08688	-.01522	-.03879	-.00112	.00095	.54706	-.00595	-.00483	-.00350
200.500	1000.300	-.13839	.08938	-.01427	-.03899	-.00107	.00068	.55689	-.00718	-.00641	-.00557
	GRADIENT	.00000	.00000	.00000	.00000	.00000	.00000	.00000	.00000	.00000	.00000

RUN NO. 302/ 0 GRADIENT INTERVAL = -5.00/ 5.00

DLT-X	DLT-Z	CN	CA	CLM	CY	CYN	CBL	XCP/L	CPB1	CPB2	CPBC
400.430	750.690	-.11359	.08070	-.01848	-.03624	-.00140	.00174	.49736	-.01079	-.01165	-.00951
400.430	800.570	-.12747	.08307	-.01619	-.03736	-.00133	.00130	.53296	-.01466	-.01500	-.01419
400.420	900.280	-.13800	.08785	-.01446	-.03898	-.00107	.00064	.55523	-.01477	-.01497	-.01476
400.370	1000.200	-.13868	.09038	-.01427	-.03911	-.00106	.00069	.55711	-.01274	-.01303	-.01267
	GRADIENT	.00000	.00000	.00000	.00000	.00000	.00000	.00000	.00000	.00000	.00000

AEDC VA422(IA17) ORB AND ET SEPARATING(ORB DATA) (RTR426) (24 JUL 75)

REFERENCE DATA

SREF = 2690.0000 SQ.FT. XMRP = 1089.6000 IN. XO
LREF = 1290.3000 IN. YMRP = .0000 IN. YO
BREF = 1290.3000 IN. ZMRP = 375.0000 IN. ZO
SCALE = .0100

PARAMETRIC DATA

DLT-Y = 200.000 ALPHA = -10.000
BETA = 3.000 DLTALF = .000
DLTBTA = 3.000 MACH = 5.930
AILRON = .000 ELEVON = .000
GRID = 8.000

RUN NO. 342/ 0 GRADIENT INTERVAL = -5.00/ 5.00

DLT-X	DLT-Z	CN	CA	CLM	CY	CYN	CBL	XCP/L	CPB1	CPB2	CPBC
.519	30.732	-.08520	.11663	-.01319	-.00316	.00717	.00587	.50524	-.01940	-.01941	-.01840
.497	98.142	-.12730	.10607	-.01667	-.02091	-.00029	.00325	.52906	-.01975	-.01965	-.01864
.528	198.330	-.16268	.10257	-.02038	-.03815	-.00116	.00430	.53471	-.01941	-.01929	-.01817
.538	300.080	-.20144	.09933	-.02047	-.04368	-.00030	.00236	.55935	-.01871	-.01858	-.01747
.548	400.080	-.21341	.10040	-.01812	-.04427	-.00021	.00179	.57511	-.01863	-.01869	-.01758
.552	500.220	-.21385	.10079	-.01803	-.04428	-.00021	.00182	.57587	-.01910	-.01917	-.01825
	GRADIENT	.00000	.00000	.00000	.00000	.00000	.00000	.00000	.00000	.00000	.00000

RUN NO. 341/ 0 GRADIENT INTERVAL = -5.00/ 5.00

DLT-X	DLT-Z	CN	CA	CLM	CY	CYN	CBL	XCP/L	CPB1	CPB2	CPBC
200.410	31.739	-.10722	.10862	-.01237	-.01143	.00301	.00389	.54463	-.01979	-.02005	-.01877
200.530	102.210	-.13441	.10445	-.01570	-.02866	-.00100	.00405	.54322	-.02089	-.02109	-.02007
200.480	201.570	-.16857	.09977	-.02181	-.04184	-.00033	.00423	.53062	-.02147	-.02156	-.02076
200.490	300.470	-.20581	.09925	-.01993	-.04388	-.00030	.00221	.56315	-.02166	-.02166	-.02107
200.560	400.150	-.21405	.10060	-.01808	-.04440	-.00022	.00182	.57555	-.02134	-.02132	-.02080
200.540	500.160	-.21409	.10091	-.01804	-.04442	-.00021	.00183	.57574	-.02077	-.02078	-.02021
	GRADIENT	.00000	.00000	.00000	.00000	.00000	.00000	.00000	.00000	.00000	.00000

AEDC VA422(IA17) ORB AND ET SEPARATING(ORB DATA) (RTR427) (24 JUL 75)

REFERENCE DATA

SREF = 2690.0000 SQ.FT. XMRP = 1089.6000 IN. XO
LREF = 1290.3000 IN. YMRP = .0000 IN. YO
BREF = 1290.3000 IN. ZMRP = 375.0000 IN. ZO
SCALE = .0100

PARAMETRIC DATA

DLT-Y = 200.000 ALPHA = -10.000
BETA = 3.000 DLTALF = -10.000
DLTBTA = 3.000 MACH = 5.930
AILRON = .000 ELEVON = .000
GRID = 8.000

RUN NO. 338/ 0 GRADIENT INTERVAL = -5.00/ 5.00

DLT-X	DLT-Z	CN	CA	CLM	CY	CYN	CBL	XCP/L	CPB1	CPB2	CPBC
.383	403.110	-.01502	.09511	-.05021	-.03419	-.00178	.01344	-2.68370	-.01062	-.00993	-.00883
.455	497.460	-.12849	.09258	-.03817	-.03949	-.00089	.00519	.37848	-.01136	-.01078	-.00982
.468	599.340	-.20370	.09721	-.02013	-.04368	-.00030	.00216	.56117	-.01089	-.01039	-.00921
.482	700.040	-.21115	.10019	-.01852	-.04424	-.00022	.00168	.57227	-.01060	-.01012	-.00913
.446	800.130	-.21331	.10118	-.01815	-.04427	-.00022	.00181	.57491	-.01188	-.01151	-.01092
	GRADIENT	.00000	.00000	.00000	.00000	.00000	.00000	.00000	.00000	.00000	.00000

RUN NO. 337/ 0 GRADIENT INTERVAL = -5.00/ 5.00

DLT-X	DLT-Z	CN	CA	CLM	CY	CYN	CBL	XCP/L	CPB1	CPB2	CPBC
200.490	401.330	-.12893	.09104	-.03818	-.03950	-.00104	.00525	.36388	-.01383	-.01348	-.01195
200.630	500.660	-.20015	.09536	-.02065	-.04356	-.00029	.00233	.55683	-.01683	-.01653	-.01579
200.440	600.530	-.20771	.09778	-.01895	-.04421	-.00023	.00170	.56878	-.01824	-.01797	-.01787
200.430	700.250	-.21300	.10076	-.01826	-.04428	-.00021	.00178	.57429	-.01756	-.01724	-.01732
200.470	800.200	-.21368	.10115	-.01813	-.04439	-.00021	.00182	.57517	-.01628	-.01598	-.01603
	GRADIENT	.00000	.00000	.00000	.00000	.00000	.00000	.00000	.00000	.00000	.00000

RUN NO. 336/ 0 GRADIENT INTERVAL = -5.00/ 5.00

DLT-X	DLT-Z	CN	CA	CLM	CY	CYN	CBL	XCP/L	CPB1	CPB2	CPBC
400.440	399.590	-.17909	.09518	-.02574	-.04223	-.00051	.00348	.51626	-.00885	-.00889	-.00704
400.380	499.910	-.20684	.09788	-.01913	-.04430	-.00023	.00163	.56750	-.00787	-.00787	-.00619
400.560	600.270	-.20851	.09937	-.01880	-.04434	-.00022	.00154	.56986	-.00834	-.00819	-.00700
400.410	700.170	-.21318	.10099	-.01811	-.04414	-.00021	.00181	.57507	-.00989	-.00968	-.00898
400.410	800.260	-.21341	.10111	-.01812	-.04427	-.00021	.00182	.57508	-.01209	-.01183	-.01151
	GRADIENT	.00000	.00000	.00000	.00000	.00000	.00000	.00000	.00000	.00000	.00000

ORIGINAL PAGE IS OF POOR QUALITY

AEDC VA422(IA17) ORB AND ET SEPARATING(ORB DATA) (RTR428) (24 JUL 75)

REFERENCE DATA

SREF = 2690.0000 SQ.FT. XMRP = 1089.6000 IN. XO
LREF = 1290.3000 IN. YMRP = .0000 IN. YO
BREF = 1290.3000 IN. ZMRP = 375.0000 IN. ZO
SCALE = .0100

PARAMETRIC DATA

DLT-Y = 200.000 ALPHA = -10.000
BETA = .000 DLTALF = .000
DLTBTA = 3.000 MACH = 5.930
AILRON = .000 ELEVON = .000
GRID = 9.000

RUN NO. 370/ 0 GRADIENT INTERVAL = -5.00/ 5.00

DLT-X	DLT-Z	CN	CA	CLM	CY	CYN	CBL	XCP/L	CPB1	CPB2	CPBC
.443	30.704	-.09037	.11905	-.01396	.04750	.00850	.00520	.50556	-.02095	-.01928	-.01864
.436	98.419	-.12513	.10769	-.01645	.02705	.00036	.00158	.52852	- 02159	-.01970	-.01910
.456	198.490	-.15838	.10175	-.02005	.00883	-.00049	.00215	.53342	-.02152	-.01951	-.01876
.513	298.520	-.19954	.09892	-.02051	.00241	.00021	.00004	.55723	-.02082	-.01897	-.01810
.448	399.960	-.21269	.09996	-.01807	.00217	.00024	-.00029	.57506	-.02055	-.01888	-.01810
.74	500.110	-.21302	.10047	-.01793	.00218	.00024	-.00030	.57583	-.02064	-.01912	-.01849
	GRADIENT	.00000	.00000	.00000	.00000	.00000	.00000	.00000	.00000	.00000	.00000

RUN NO. 369/ 0 GRADIENT INTERVAL = -5.00/ 5.00

DLT-X	DLT-Z	CN	CA	CLM	CY	CYN	CBL	XCP/L	CPB1	CPB2	CPBC
200.550	31.402	-.11300	.10969	-.01214	.03823	.00389	.00245	.55253	-.02044	-.01952	-.01855
200.440	102.280	-.13271	.10408	-.01534	.01718	-.00045	.00250	.54440	-.02143	-.02062	-.01982
200.530	201.630	-.16766	.09925	-.02128	.00372	.00023	.00125	.53306	-.02194	-.02111	-.02055
200.510	300.420	-.20451	.09905	-.01990	.00239	.00021	-.00006	.56267	-.02215	-.02131	-.02089
200.420	400.130	-.21325	.10027	-.01799	.00224	.00024	-.00030	.57562	-.02192	-.02107	-.02067
200.390	500.160	-.21348	.10062	-.01794	.00214	.00022	-.00031	.57595	-.02153	-.02063	-.02020
	GRADIENT	.00000	.00000	.00000	.00000	.00000	.00000	.00000	.00000	.00000	.00000

AEDC VA422(IA17) ORB AND ET SEPARATING(ORB DATA) (RTR429) (24 JUL 75)

REFERENCE DATA

SREF = 2890.0000 SQ.FT. XMRP = 1089.6000 IN. XO
LREF = 1290.3000 IN. YMRP = .0000 IN. YO
BREF = 1290.3000 IN. ZMRP = 375.0000 IN. ZO
SCALE = .0100

PARAMETRIC DATA

DLT-Y = 200.000 ALPHA = -10.000
BETA = .000 DLTALF = -10.000
DLTBTA = 3.000 MACH = 5.930
AILRON = .000 ELEVON = .000
GRID = 9.000

RUN NO. 368/ 0 GRADIENT INTERVAL = -5.00/ 5.00

DLT-X	DLT-Z	CN	CA	CLM	CY	CYN	CBL	XCP/L	CPB1	CPB2	CPBC
.306	403.270	-.01136	.09504	-.05039	.01100	-.00122	.01042	-3.77480	-.01269	-.01135	-.01055
.406	497.190	-.12965	.09254	-.03670	.00570	-.00027	.00156	.37695	-.01351	-.01217	-.01153
.431	599.480	-.20067	.09762	-.02042	.00287	.00023	.00030	.55824	-.01320	-.01190	-.01106
.476	699.990	-.21163	.10009	-.01828	.00223	.00023	-.00028	.57363	-.01311	-.01189	-.01114
.460	800.170	-.21274	.10094	-.01806	.00219	.00023	-.00031	.57511	-.01417	-.01301	-.01261
	GRADIENT	.00000	.00000	.00000	.00000	.00000	.00000	.00000	.00000	.00000	.00000

RUN NO. 365/ 0 GRADIENT INTERVAL = -5.00/ 5.00

DLT-X	DLT-Z	CN	CA	CLM	CY	CYN	CBL	XCP/L	CPB1	CPB2	CPBC
200.430	401.430	-.12429	.09075	-.03872	.00773	-.00082	.00225	.34845	-.01575	-.01469	-.01358
200.520	500.780	-.19942	.09564	-.01995	.00323	.00026	.00037	.55998	-.01828	-.01754	-.01702
200.390	600.460	-.20885	.09830	-.01869	.00247	.00023	-.00024	.57052	-.01906	-.01838	-.01837
200.430	700.210	-.21278	.10052	-.01805	.00215	.00023	-.00031	.57519	-.01844	-.01776	-.01784
200.410	800.190	-.21313	.10086	-.01803	.00212	.00022	-.00030	.57540	-.01739	-.01668	-.01673
	GRADIENT	.00000	.00000	.00000	.00000	.00000	.00000	.00000	.00000	.00000	.00000

RUN NO. 364/ 0 GRADIENT INTERVAL = -5.00/ 5.00

DLT-X	DLT-Z	CN	CA	CLM	CY	CYN	CBL	XCP/L	CPB1	CPB2	CPBC
400.430	400.000	-.17729	.09468	-.02547	.00371	.00009	.00083	.51632	-.01148	-.01081	-.00912
400.390	499.770	-.21033	.09893	-.01857	.00245	.00024	-.00023	.57172	-.00993	-.00923	-.00775
400.260	600.140	-.21131	.09965	-.01827	.00231	.00023	-.00028	.57357	-.01078	-.00995	-.00901
400.420	700.310	-.21258	.10070	-.01802	.00226	.00022	-.00031	.57524	-.01233	-.01147	-.01095
400.350	800.250	-.21267	.10074	-.01801	.00228	.00023	-.00030	.57532	-.01402	-.01320	-.01298
	GRADIENT	.00000	.00000	.00000	.00000	.00000	.00000	.00000	.00000	.00000	.00000

AEDC VA422(IA17) ORB AND ET SEPARATING(ORB DATA) (RTR430) (24 JUL 75)

REFERENCE DATA

SREF = 2690.0000 SQ.FT. XMRP = 1089.6000 IN. XO
LREF = 1290.3000 IN. YMRP = .0000 IN. YO
BREF = 1290.3000 IN. ZMRP = 375.0000 IN. ZO
SCALE = .0100

PARAMETRIC DATA

DLT-Y = 200.000 ALPHA = 10.000
BETA = .000 DLTALF = -10.000
DLTBTA = 3.000 MACH = 5.930
AILRON = .000 ELEVON = .000
GRID = 23.000

RUN NO. 671/ 0 GRADIENT INTERVAL = -5.00/ 5.00

DLT-X	DLT-Z	CN	CA	CLM	CY	CYN	CBL	XCP/L	CPB1	CPB2	CPBC
.475	399.870	.23977	.06738	.00797	.00007	.00272	-.00726	.62678	-.02842	-.02781	-.02749
.674	500.220	.27229	.06917	-.00330	.00408	.00074	-.00543	.67211	-.02866	-.02804	-.02777
.639	598.970	.27200	.06699	-.01471	.00804	-.00106	.00179	.71409	-.02888	-.02829	-.02807
.685	698.920	.25262	.06180	-.01960	.00615	-.00130	.01037	.73757	-.02909	-.02851	-.02829
.566	798.110	.17709	.05900	-.01129	.00226	-.00019	.00169	.72378	-.02916	-.02861	-.02835
	GRADIENT	.00000	.00000	.00000	.00000	.00000	.00000	.00000	.00000	.00000	.00000

RUN NO. 670/ 0 GRADIENT INTERVAL = -5.00/ 5.00

DLT-X	DLT-Z	CN	CA	CLM	CY	CYN	CBL	XCP/L	CPB1	CPB2	CPBC
200.500	400.910	.27081	.06826	-.00155	.00466	.00083	-.00580	.66572	-.02799	-.02731	-.02691
200.600	501.010	.27413	.06749	-.01381	.00868	-.00106	.00183	.71038	-.02784	-.02715	-.02668
200.570	602.090	.26364	.06237	-.02060	.00700	-.00146	.01140	.73812	-.02785	-.02713	-.02661
200.570	700.400	.18645	.05849	-.01327	.00265	-.00028	.00258	.73115	-.02799	-.02729	-.02682
200.660	799.940	.15371	.06109	-.00474	.00081	.00002	-.00007	.69083	-.02809	-.02742	-.02702
	GRADIENT	.00000	.00000	.00000	.00000	.00000	.00000	.00000	.00000	.00000	.00000

RUN NO. 669/ 0 GRADIENT INTERVAL = -5.00/ 5.00

DLT-X	DLT-Z	CN	CA	CLM	CY	CYN	CBL	XCP/L	CPB1	CPB2	CPBC
400.580	398.380	.27376	.06768	-.01213	.00899	-.00092	.00133	.70432	-.02788	-.02724	-.02696
400.610	499.310	.27350	.06409	-.02103	.00867	-.00187	.01209	.73689	-.02818	-.02753	-.02729
400.470	597.760	.19639	.05836	-.01554	.00319	-.00042	.00388	.73912	-.02836	-.02772	-.02747
400.520	699.550	.15399	.06070	-.00494	.00095	.00001	-.00006	.69207	-.02835	-.02771	-.02738
400.580	799.980	.15395	.06194	-.00485	.00082	.00004	-.00004	.69153	-.02812	-.02745	-.02701
	GRADIENT	.00000	.00000	.00000	.00000	.00000	.00000	.00000	.00000	.00000	.00000

AEDC VA422(IA17) ORB AND ET SEPARATING(ORB DATA) (RTR431) (24 JUL 75)

REFERENCE DATA

SREF = 2890.0000 SQ.FT. XMRP = 1089.6000 IN. XO
LREF = 1290.3000 IN. YMRP = .0000 IN. YO
BREF = 1290.3000 IN. ZMRP = 375.0000 IN. ZO
SCALE = .0100

PARAMETRIC DATA

DLT-Y = 200.000 ALPHA = 10.000
BETA = .000 DLTALF = -20.000
DLTBTA = 3.000 MACH = 5.930
AILRON = .000 ELEVON = .000
GRID = 23.000

RUN NO. 665/ 0 GRADIENT INTERVAL = -5.00/ 5.00

DLT-X	DLT-Z	CN	CA	CLM	CY	CYN	CBL	XCP/L	CPB1	CPB2	CPBC
.437	802.940	.34981	.06233	-.03632	.01272	-.00273	.01831	.76384	-.02611	-.02557	-.02503
.480	897.370	.23205	.05710	-.02233	.00477	-.00077	.00739	.75625	-.02598	-.02538	-.02481
.498	998.920	.15788	.05915	-.00825	.00124	-.00008	-.00001	.69982	-.02589	-.02521	-.02461
	GRADIENT	.00000	.00000	.00000	.00000	.00000	.00000	.00000	.00000	.00000	.00000

RUN NO. 664/ 0 GRADIENT INTERVAL = -5.00/ 5.00

DLT-X	DLT-Z	CN	CA	CLM	CY	CYN	CBL	XCP/L	CPB1	CPB2	CPBC
200.440	801.560	.24239	.05696	-.02425	.00534	-.00091	.00831	.76006	-.02645	-.02600	-.02551
200.430	899.940	.15950	.05932	-.00663	.00138	-.00009	-.00003	.70157	-.02662	-.02619	-.02586
200.560	1000.000	.15474	.06191	-.00486	.00076	.00003	-.00004	.69142	-.02626	-.02585	-.02549
	GRADIENT	.00000	.00000	.00000	.00000	.00000	.00000	.00000	.00000	.00000	.00000

RUN NO. 663/ 0 GRADIENT INTERVAL = -5.00/ 5.00

DLT-X	DLT-Z	CN	CA	CLM	CY	CYN	CBL	XCP/L	CPB1	CPB2	CPBC
400.530	800.230	.16120	.05921	-.00714	.00149	-.00011	.00000	.70432	-.02533	-.02483	-.02421
400.330	900.080	.15524	.06186	-.00483	.00076	.00002	-.00004	.69110	-.02498	-.02454	-.02381
400.470	1000.100	.15498	.06207	-.00483	.00075	.00003	-.00004	.69117	-.02514	-.02475	-.02415
	GRADIENT	.00000	.00000	.00000	.00000	.00000	.00000	.00000	.00000	.00000	.00000

ORIGINAL PAGE IS OF POOR QUALITY

AEDC VA422(IA17) ORB AND ET SEPARATING(ORB DATA) (RTR432) (24 JUL 75)

REFERENCE DATA

SREF = 2890.0000 SQ.FT. XMRP = 1089.6000 IN. XO
LREF = 1290.3000 IN. YMRP = .0000 IN. YO
BREF = 1290.3000 IN. ZMRP = 375.0000 IN. ZO
SCALE = .0100

PARAMETRIC DATA

DLT-Y = 200.000 ALPHA = 10.000
BETA = 3.000 DLTALF = -10.000
DLTBTA = 3.000 MACH = 5.930
AILRON = .000 ELEVON = .000
GRID = 27.000

RUN NO. 701/ 0 GRADIENT INTERVAL = -5.00/ 5.00

DLT-X	DLT-Z	CN	CA	CLM	CY	CYN	CBL	XCP/L	CPB1	CPB2	CPBC
.487	400.600	.28766	.06867	.00587	-.02883	-.00005	-.01034	.63808	-.02788	-.02770	-.02727
.658	499.440	.28022	.06835	-.00557	-.02377	-.00160	-.00687	.67987	-.02815	-.02794	-.02756
.514	598.580	.26679	.06688	-.01618	-.02058	-.00312	.00116	.72063	-.02846	-.02824	-.02791
.668	698.920	.24383	.06291	-.01957	-.02108	-.00377	.00835	.74027	-.02877	-.02857	-.02826
.678	798.380	.17673	.05910	-.01112	-.02597	-.00255	.00093	.72295	-.02886	-.02867	-.02831
	GRADIENT	.00000	.00000	.00000	.00000	.00000	.00000	.00000	.00000	.00000	.00000

RUN NO. 700/ 0 GRADIENT INTERVAL = -5.00/ 5.00

DLT-X	DLT-Z	CN	CA	CLM	CY	CYN	CBL	XCP/L	CPB1	CPB2	CPBC
200.500	401.300	.28081	.06784	-.00425	-.02330	-.00143	-.00717	.67516	-.02713	-.02697	-.02644
200.640	501.080	.27097	.06698	-.01570	-.02034	-.00303	.00100	.71795	-.02687	-.02670	-.02609
200.600	601.640	.25440	.06334	-.02070	-.02016	-.00394	.00913	.74137	-.02682	-.02666	-.02597
200.580	700.340	.18589	.05865	-.01306	-.02545	-.00268	.00204	.73026	-.02718	-.02703	-.02630
200.590	800.000	.15257	.05999	-.00459	-.02763	-.00236	-.00177	.69005	-.02762	-.02744	-.02692
	GRADIENT	.00000	.00000	.00000	.00000	.00000	.00000	.00000	.00000	.00000	.00000

RUN NO. 699/ 0 GRADIENT INTERVAL = -5.00/ 5.00

DLT-X	DLT-Z	CN	CA	CLM	CY	CYN	CBL	XCP/L	CPB1	CPB2	CPBC
400.640	398.430	.27419	.06743	-.01395	-.02018	-.00286	-.00007	.71089	-.02760	-.02743	-.02705
400.580	499.170	.26594	.06430	-.02164	-.01943	-.00400	.00963	.74137	-.02791	-.02773	-.02737
400.610	598.180	.19720	.05886	-.01532	-.02472	-.00282	.00333	.73768	-.02817	-.02799	-.02762
400.590	699.360	.15238	.05989	-.00464	-.02745	-.00237	-.00177	.69045	-.02825	-.02805	-.02759
400.660	800.080	.15378	.06236	-.00488	-.02785	-.00230	-.00173	.69172	-.02765	-.02746	-.02677
	GRADIENT	.00000	.00000	.00000	.00000	.00000	.00000	.00000	.00000	.00000	.00000

AEDC VA422(IA17) ORB AND ET SEPARATING(ORB DATA) (RTR433) (24 JUL 75)

REFERENCE DATA

SREF = 2690.0000 SQ.FT. XMRP = 1089.6000 IN. XO
LREF = 1290.3000 IN. YMRP = .0000 IN. YO
BREF = 1290.3000 IN. ZMRP = 375.0000 IN. ZO
SCALE = .0100

PARAMETRIC DATA

DLT-Y = 200.000 ALPHA = 10.000
BETA = 3.000 DLTALF = -20.000
DLTBTA = 3.000 MACH = 5.930
AILRON = .000 ELEVON = .000
GRID = 27.000

RUN NO. 695/ 0 GRADIENT INTERVAL = -5.00/ 5.00

DLT-X	DLT-Z	CN	CA	CLM	CY	CYN	CBL	XCP/L	CPB1	CPB2	CPBC
.497	802.460	.33680	.06181	-.03678	-.01514	-.00482	.01428	.76920	-.02425	-.02406	-.02341
.504	897.890	.22946	.05692	-.02164	-.02262	-.00329	.00760	.75430	-.02418	-.02396	-.02329
.609	998.840	.15476	.06010	-.00534	-.02711	-.00242	-.00174	.69451	-.02386	-.02370	-.02289
	GRADIENT	.00000	.00000	.00000	.00000	.00000	.00000	.00000	.00000	.00000	.00000

RUN NO. 694/ 0 GRADIENT INTERVAL = -5.00/ 5.00

DLT-X	DLT-Z	CN	CA	CLM	CY	CYN	CBL	XCP/L	CPB1	CPB2	CPBC
200.510	801.600	.24014	.05729	-.02384	-.02200	-.00346	.00878	.75928	-.02463	-.02436	-.02379
200.620	900.050	.15597	.05972	-.00562	-.02700	-.00244	-.00174	.69606	-.02473	-.02446	-.02398
200.590	1000.000	.15403	.06113	-.00477	-.02784	-.00232	-.00174	.69097	-.02450	-.02418	-.02371
	GRADIENT	.00000	.00000	.00000	.00000	.00000	.00000	.00000	.00000	.00000	.00000

RUN NO. 693/ 0 GRADIENT INTERVAL = -5.00/ 5.00

DLT-X	DLT-Z	CN	CA	CLM	CY	CYN	CBL	XCP/L	CPB1	CPB2	CPBC
400.640	800.160	.15795	.05955	-.00625	-.02686	-.00248	-.00169	.69954	-.02460	-.02422	-.02361
400.640	900.000	.15400	.06090	-.00477	-.02767	-.00231	-.00173	.69095	-.02432	-.02388	-.02325
400.570	1000.100	.15375	.06045	-.00466	-.02771	-.00232	-.00174	.69033	-.02428	-.02388	-.02331
	GRADIENT	.00000	.00000	.00000	.00000	.00000	.00000	.00000	.00000	.00000	.00000

AEDC VA422(IA17) ISOLATED ORBITER (RTR501) (24 JUL 75)

REFERENCE DATA

SREF = 2690.0000 SQ.FT. XMRP = 1089.6000 IN. XO
LREF = 1290.3000 IN. YMRP = .0000 IN. YO
BREF = 1290.3000 IN. ZMRP = 375.0000 IN. ZO
SCALE = .0100

PARAMETRIC DATA

DLT-Y = .000 ALPHA = .000
BETA = .000 DLTALF = .000
DLTBTA = .000 MACH = 5.930
AILRON = .000 ELEVON = .000
GRID = 1.000

RUN NO. 101/ 0 GRADIENT INTERVAL = -5.00/ 5.00

DLT-X	DLT-Z	CN	CA	CLM	CY	CYN	CBL	XCP/L	CPB1	CPB2	CPBC
.000	.000	-.04853	.07732	-.01123	.00133	.00015	-.00008	.42851	-.02707	-.02675	-.02640
	GRADIENT	.00000	.00000	.00000	.00000	.00000	.00000	.00000	.00000	.00000	.00000

AEDC VA422(IA17) ISOLATED ORBITER (RTR502) (24 JUL 75)

REFERENCE DATA

SREF = 2690.0000 SQ.FT. XMRP = 1089.6000 IN. XO
LREF = 1290.3000 IN. YMRP = .0000 IN. YO
BREF = 1290.3000 IN. ZMRP = 375.0000 IN. ZO
SCALE = .0100

PARAMETRIC DATA

DLT-Y = .000 ALPHA = .000
BETA = 3.000 DLTALF = .000
DLTBTA = -3.000 MACH = 5.930
AILRON = .000 ELEVON = .000
GRID = 3.000

RUN NO. 180/ 0 GRADIENT INTERVAL = -5.00/ 5.00

DLT-X	DLT-Z	CN	CA	CLM	CY	CYN	CBL	XCP/L	CPB1	CPB2	CPBC
.000	.000	-.05139	.07816	-.01063	-.03357	-.00158	.00004	.45319	-.02800	-.02793	-.02730
	GRADIENT	.00000	.00000	.00000	.00000	.00000	.00000	.00000	.00000	.00000	.00000

AEDC VA422(IA17) ISOLATED ORBITER (RTR503) (24 JUL 75)

REFERENCE DATA

SREF = 2690.0000 SQ.FT. XMRP = 1089.6000 IN. XO
LREF = 1290.3000 IN. YMRP = .0000 IN. YO
BREF = 1290.3000 IN. ZMRP = 375.0000 IN. ZO
SCALE = .0100

PARAMETRIC DATA

DLT-Y = .000 ALPHA = 5.000
BETA = .000 DLTALF = -5.000
DLTBTA = .000 MACH = 5.930
AILRON = .000 ELEVON = .000
GRID = 5.000

RUN NO. 238/ 0 GRADIENT INTERVAL = -5.00/ 5.00

DLT-X	DLT-Z	CN	CA	CLM	CY	CYN	CBL	XCP/L	CPB1	CPB2	CPBC
.000	.000	.04341	.06913	-.00732	.00118	-.00012	-.00004	.62867	-.02939	-.02918	-.02832
	GRADIENT	.00000	.00000	.00000	.00000	.00000	.00000	.00000	.00000	.00000	.00000

AEDC VA422(IA17) ISOLATED ORBITER (RTR504) (24 JUL 75)

REFERENCE DATA

SREF = 2690.0000 SQ.FT. XMRP = 1089.6000 IN. XO
LREF = 1290.3000 IN. YMRP = .0000 IN. YO
BREF = 1290.3000 IN. ZMRP = 375.0000 IN. ZO
SCALE = .0100

PARAMETRIC DATA

DLT-Y = .000 ALPHA = 5.000
BETA = 3.000 DLTALF = -5.000
DLTBTA = -3.000 MACH = 5.930
AILRON = .000 ELEVON = .000
GRID = 4.000

RUN NO. 198/ 0 GRADIENT INTERVAL = -5.00/ 5.00

DLT-X	DLT-Z	CN	CA	CLM	CY	CYN	CBL	XCP/L	CPB1	CPB2	CPBC
.000	.000	.04374	.06656	-.00766	-.02980	-.00210	-.00099	.83509	-.02946	-.02943	-.02864
	GRADIENT	.00000	.00000	.00000	.00000	.00000	.00000	.00000	.00000	.00000	.00000

AEDC VA422(IA17) ISOLATED ORBITER (RTR505) (24 JUL 75)

REFERENCE DATA

SREF = 2690.0000 SQ.FT. XMRP = 1089.6000 IN. XO
LREF = 1290.3000 IN. YMRP = .0000 IN. YO
BREF = 1290.3000 IN. ZMRP = 375.0000 IN. ZO
SCALE = .0100

PARAMETRIC DATA

DLT-Y = .000 ALPHA = -5.000
BETA = .000 DLTALF = 5.000
DLTBTA = .000 MACH = 5.930
AILRON = .000 ELEVON = .000
GRID = 6.000

RUN NO. 278/ 0 GRADIENT INTERVAL = -5.00/ 5.00

DLT-X	DLT-Z	CN	CA	CLM	CY	CYN	CBL	XCP/L	CPB1	CPB2	CPBC
.000	.000	-.13809	.08991	-.01407	.00201	-.00008	-.00001	.55809	-.02810	-.02699	-.02650
	GRADIENT	.00000	.00000	.00000	.00000	.00000	.00000	.00000	.00000	.00000	.00000

AEDC VA422(IA17) ISOLATED ORBITER (RTR506) (24 JUL 75)

REFERENCE DATA

SREF = 2690.0000 SQ.FT. XMRP = 1089.6000 IN. XO
LREF = 1290.3000 IN. YMRP = .0000 IN. YO
BREF = 1290.3000 IN. ZMRP = 375.0000 IN. ZO
SCALE = .0100

PARAMETRIC DATA

DLT-Y = .000 ALPHA = -5.000
BETA = 3.000 DLTALF = 5.000
DLTBTA = -3.000 MACH = 5.930
AILRON = .000 ELEVON = .000
GRID = 7.000

RUN NO. 316/ 0 GRADIENT INTERVAL = -5.00/ 5.00

DLT-X	DLT-Z	CN	CA	CLM	CY	CYN	CBL	XCP/L	CPB1	CPB2	CPBC
.000	.000	-.13934	.09041	-.01420	-.03915	-.00108	.00069	.55810	-.02736	-.02708	-.02650
	GRADIENT	.00000	.00000	.00000	.00000	.00000	.00000	.00000	.00000	.00000	.00000

AEDC VA422(IA17) ISOLATED ORBITER (RTR507) (24 JUL 75)

REFERENCE DATA

SREF = 2690.0000 SQ.FT. XMRP = 1089.6000 IN. XO
LREF = 1290.3000 IN. YMRP = .0000 IN. YO
BREF = 1290.3000 IN. ZMRP = 375.0000 IN. ZO
SCALE = .0100

PARAMETRIC DATA

DLT-Y = .000 ALPHA = -10.000
BETA = 3.000 DLTALF = 10.000
DLTBTA = -3.000 MACH = 5.930
AILRON = .000 ELEVON = .000
GRID = 8.000

RUN NO. 343/ 0 GRADIENT INTERVAL = -5.00/ 5.00

DLT-X	DLT-Z	CN	CA	CLM	CY	CYN	CBL	XCP/L	CPB1	CPB2	CPBC
.000	.000	-.21410	.10086	-.01804	-.04452	-.00021	.00182	.57576	-.02275	-.02259	-.02214
	GRADIENT	.00000	.00000	.00000	.00000	.00000	.00000	.00000	.00000	.00000	.00000

ORIGINAL PAGE IS OF POOR QUALITY

AEDC VA422(IA17) ISOLATED ORBITER (RTR508) (24 JUL 75)

REFERENCE DATA

SREF = 2690.0000 SQ.FT. XMRP = 1089.6000 IN. XO
LREF = 1290.3000 IN. YMRP = .0000 IN. YO
BREF = 1290.3000 IN. ZMRP = 375.0000 IN. ZO
SCALE = .0100

PARAMETRIC DATA

DLT-Y = .000 ALPHA = -10.000
BETA = .000 DLTALF = 10.000
DLTBTA = .000 MACH = 5.930
AILRON = .000 ELEVON = .000
GRID = 9.000

RUN NO. 371/ 0 GRADIENT INTERVAL = -5.00/ 5.00

DLT-X	DLT-Z	CN	CA	CLM	CY	CYN	CBL	XCP/L	CPB1	CPB2	CPBC
.000	.000	-.21343	.10060	-.01795	.00205	.00023	-.00030	.57589	-.02320	-.02230	-.02200
	GRADIENT	.00000	.00000	.00000	.00000	.00000	.00000	.00000	.00000	.00000	.00000

AEDC VA422(IA17) ISOLATED ORBITER (RTR509) (24 JUL 75)

REFERENCE DATA

SREF = 2690.0000 SQ.FT. XMRP = 1089.6000 IN. XO
LREF = 1290.3000 IN. YMRP = .0000 IN. YO
BREF = 1290.3000 IN. ZMRP = 375.0000 IN. ZO
SCALE = .0100

PARAMETRIC DATA

DLT-Y = .000 ALPHA = -10.000
BETA = .000 DLTALF = 10.000
DLTBTA = .000 MACH = 5.930
AILRON = .000 ELEVON = -20.000
GRID = 10.000

RUN NO. 395/ 0 GRADIENT INTERVAL = -5.00/ 5.00

DLT-X	DLT-Z	CN	CA	CLM	CY	CYN	CBL	XCP/L	CPB1	CPB2	CPBC
.000	.000	-.25398	.11255	-.00899	.00190	.00009	-.00080	.62460	-.02542	-.02438	-.02233
	GRADIENT	.00000	.00000	.00000	.00000	.00000	.00000	.00000	.00000	.00000	.00000

AEDC VA422(IA17) ISOLATED ORBITER (RTR510) (24 JUL 75)

REFERENCE DATA

SREF = 2690.0000 SQ.FT. XMRP = 1089.6000 IN. XO
LREF = 1290.3000 IN. YMRP = .0000 IN. YO
BREF = 1290.3000 IN. ZMRP = 375.0000 IN. ZO
SCALE = .0100

PARAMETRIC DATA

DLT-Y = .000 ALPHA = -5.000
BETA = .000 DLTALF = 5.000
DLTBTA = .000 MACH = 5.930
AILRON = .000 ELEVON = -20.000
GRID = 11.000

RUN NO. 408/ 0 GRADIENT INTERVAL = -5.00/ 5.00

DLT-X	DLT-Z	CN	CA	CLM	CY	CYN	CBL	XCP/L	CPB1	CPB2	CPBC
.000	.000	-.18788	.09888	-.00739	.00238	-.00009	-.00041	.61593	-.02649	-.02581	-.02558
	GRADIENT	.00000	.00000	.00000	.00000	.00000	.00000	.00000	.00000	.00000	.00000

AEDC VA422(IA17) ISOLATED ORBITER (RTR511) (24 JUL 75)

REFERENCE DATA

SREF = 2690.0000 SQ.FT. XMRP = 1089.6000 IN. XO
LREF = 1290.3000 IN. YMRP = .0000 IN. YO
BREF = 1290.3000 IN. ZMRP = 375.0000 IN. ZO
SCALE = .0100

PARAMETRIC DATA

DLT-Y = .000 ALPHA = 5.000
BETA = .000 DLTALF = -5.000
DLTBTA = .000 MACH = 5.930
AILRON = .000 ELEVON = -20.000
GRID = 12.000

RUN NO. 421/ 0 GRADIENT INTERVAL = -5.00/ 5.00

DLT-X	DLT-Z	CN	CA	CLM	CY	CYN	CBL	XCP/L	CPB1	CPB2	CPBC
.000	.000	.02702	.07024	-.00359	.00111	-.00001	-.00023	.79293	-.02779	-.02765	-.02718
	GRADIENT	.00000	.00000	.00000	.00000	.00000	.00000	.00000	.00000	.00000	.00000

AEDC VA422(IA17) ISOLATED ORBITER (RTR512) (24 JUL 75)

REFERENCE DATA

SREF = 2690.0000 SQ.FT. XMRP = 1089.6000 IN. XO
LREF = 1290.3000 IN. YMRP = .0000 IN. YO
BREF = 1290.3000 IN. ZMRP = 375.0000 IN. ZO
SCALE = .0100

PARAMETRIC DATA

DLT-Y = .000 ALPHA = .000
BETA = .000 DLTALF = .000
DLTBTA = .000 MACH = 5.930
AILRON = .000 ELEVON = -20.000
GRID = 13.000

RUN NO. 434/ 0 GRADIENT INTERVAL = -5.00/ 5.00

DLT-X	DLT-Z	CN	CA	CLM	CY	CYN	CBL	XCP/L	CPB1	CPB2	CPBC
.000	.000	-.06860	.07985	-.00700	.00102	.00017	-.00038	.55797	-.01990	-.01988	-.01919
	GRADIENT	.00000	.00000	.00000	.00000	.00000	.00000	.00000	.00000	.00000	.00000

AEDC VA422(IA17) ISOLATED ORBITER (RTR513) (24 JUL 75)

REFERENCE DATA

SREF = 2690.0000 SQ.FT. XMRP = 1089.6000 IN. XO
LREF = 1290.3000 IN. YMRP = .0000 IN. YO
BREF = 1290.3000 IN. ZMRP = 375.0000 IN. ZO
SCALE = .0100

PARAMETRIC DATA

DLT-Y = .000 ALPHA = .000
BETA = 3.000 DLTALF = .000
DLTBTA = -3.000 MACH = 5.930
AILRON = .000 ELEVON = -20.000
GRID = 14.000

RUN NO. 441/ 0 GRADIENT INTERVAL = -5.00/ 5.00

DLT-X	DLT-Z	CN	CA	CLM	CY	CYN	CBL	XCP/L	CPB1	CPB2	CPBC
.000	.000	-.07164	.08112	-.00645	-.03400	-.00139	.00057	.56991	-.02714	-.02713	-.02669
	GRADIENT	.00000	.00000	.00000	.00000	.00000	.00000	.00000	.00000	.00000	.00000

ORIGINAL PAGE IS OF POOR QUALITY

AEDC VA422(IA17) ISOLATED ORBITER (RTR514) (24 JUL 75)

REFERENCE DATA

SREF = 2690.0000 SQ.FT. XMRP = 1089.6000 IN. XO
LREF = 1290.3000 IN. YMRP = .0000 IN. YO
BREF = 1290.3000 IN. ZMRP = 375.0000 IN. ZO
SCALE = .0100

PARAMETRIC DATA

DLT-Y = .000 ALPHA = .000
BETA = .000 DLTALF = .000
DLTBTA = .000 MACH = 5.930
AILRON = .000 ELEVON = -40.000
GRID = 13.000 PO = 94.000

RUN NO. 607/ 0 GRADIENT INTERVAL = -5.00/ 5.00

DLT-X	DLT-Z	CN	CA	CLM	CY	CYN	CBL	XCP/L	CPB1	CPB2	CPBC
.000	.000	-.09785	.09790	-.00158	.00082	.00027	-.00008	.64410	-.02691	-.02570	-.02574
	GRADIENT	.00000	.00000	.00000	.00000	.00000	.00000	.00000	.00000	.00000	.00000

AEDC VA422(IA17) ISOLATED ORBITER (RTR515) (24 JUL 75)

REFERENCE DATA

SREF = 2690.0000 SQ.FT. XMRP = 1089.6000 IN. XO
LREF = 1290.3000 IN. YMRP = .0000 IN. YO
BREF = 1290.3000 IN. ZMRP = 375.0000 IN. ZO
SCALE = .0100

PARAMETRIC DATA

DLT-Y = .000 ALPHA = 5.000
BETA = .000 DLTALF = -5.000
DLTBTA = .000 MACH = 5.930
AILRON = .000 ELEVON = -40.000
GRID = 12.000 PO = 94.000

RUN NO. 620/ 0 GRADIENT INTERVAL = -5.00/ 5.00

DLT-X	DLT-Z	CN	CA	CLM	CY	CYN	CBL	XCP/L	CPB1	CPB2	CPBC
.000	.000	.00814	.08088	-.00012	.00052	.00007	-.00005	.67984	-.02988	-.02879	-.02884
	GRADIENT	.00000	.00000	.00000	.00000	.00000	.00000	.00000	.00000	.00000	.00000

AEDC VA422(IA17) ISOLATED ORBITER (RTR516) (24 JUL 75)

REFERENCE DATA

SREF = 2690.0000 SQ.FT. XMRP = 1089.6000 IN. XO
LREF = 1290.3000 IN. YMRP = .0000 IN. YO
BREF = 1290.3000 IN. ZMRP = 375.0000 IN. ZO
SCALE = .0100

PARAMETRIC DATA

DLT-Y = .000 ALPHA = -5.000
BETA = .000 DLTALF = 5.000
DLTBTA = .000 MACH = 5.930
AILRON = .000 ELEVON = -40.000
GRID = 11.000 PO = 94.000

RUN NO. 633/ 0 GRADIENT INTERVAL = -5.00/ 5.00

DLT-X	DLT-Z	CN	CA	CLM	CY	CYN	CBL	XCP/L	CPB1	CPB2	CPBC
.000	.000	-.21091	.12823	.00134	.00188	.00005	.00009	.66636	-.03561	-.03698	-.03561
	GRADIENT	.00000	.00000	.00000	.00000	.00000	.00000	.00000	.00000	.00000	.00000

AEDC VA422(IA17) ISOLATED ORBITER (RTR517) (24 JUL 75)

REFERENCE DATA

SREF = 2690.0000 SQ.FT. XMRP = 1089.6000 IN. XO
LREF = 1290.3000 IN. YMRP = .0000 IN. YO
BREF = 1290.3000 IN. ZMRP = 375.0000 IN. ZO
SCALE = .0100

PARAMETRIC DATA

DLT-Y = .000 ALPHA = -10.000
BETA = .000 DLTALF = 10.000
DLTBTA = .000 MACH = 5.930
AILRON = .000 ELEVON = -40.000
GRID = 10.000 PO = 94.000

RUN NO. 642/ 0 GRADIENT INTERVAL = -5.00/ 5.00

DLT-X	DLT-Z	CN	CA	CLM	CY	CYN	CBL	XCP/L	CPB1	CPB2	CPBC
.000	.000	-.30502	.14992	.00133	.00162	.00005	-.00028	.66437	-.01655	-.01493	-.01410
	GRADIENT	.00000	.00000	.00000	.00000	.00000	.00000	.00000	.00000	.00000	.00000

AEDC VA422(IA17) ISOLATED ORBITER (RTR518) (24 JUL 75)

REFERENCE DATA

SREF = 2690.0000 SQ.FT. XMRP = 1089.6000 IN. XO
LREF = 1290.3000 IN. YMRP = .0000 IN. YO
BREF = 1290.3000 IN. ZMRP = 375.0000 IN. ZO
SCALE = .0100

PARAMETRIC DATA

DLT-Y = .000 ALPHA = .000
BETA = 3.000 DLTALF = .000
DLTBTA = -3.000 MACH = 5.930
AILRON = 15.000 ELEVON = .000
GRID = 14.000

RUN NO. 468/ 0 GRADIENT INTERVAL = -5.00/ 5.00

DLT-X	DLT-Z	CN	CA	CLM	CY	CYN	CBL	XCP/L	CPB1	CPB2	CPBC
.000	.000	-.05518	.07991	-.01082	-.03550	-.00143	.00286	.46390	-.02860	-.02826	-.02815
	GRADIENT	.00000	.00000	.00000	.00000	.00000	.00000	.00000	.00000	.00000	.00000

AEDC VA422(IA17) ISOLATED ORBITER (RTR519) (24 JUL 75)

REFERENCE DATA

SREF = 2690.0000 SQ.FT. XMRP = 1089.6000 IN. XO
LREF = 1290.3000 IN. YMRP = .0000 IN. YO
BREF = 1290.3000 IN. ZMRP = 375.0000 IN. ZO
SCALE = .0100

PARAMETRIC DATA

DLT-Y = .000 ALPHA = .000
BETA = .000 DLTALF = .000
DLTBTA = .000 MACH = 5.930
AILRON = 15.000 ELEVON = .000
GRID = 13.000

RUN NO. 481/ 0 GRADIENT INTERVAL = -5.00/ 5.00

DLT-X	DLT-Z	CN	CA	CLM	CY	CYN	CBL	XCP/L	CPB1	CPB2	CPBC
.000	.000	-.04955	.07784	-.01182	-.00043	.00039	.00259	.42140	-.02032	-.01986	-.01957
	GRADIENT	.00000	.00000	.00000	.00000	.00000	.00000	.00000	.00000	.00000	.00000

AEDC VA422(IA17) ISOLATED ORBITER (RTR520) (24 JUL 75)

REFERENCE DATA

SREF = 2690.0000 SQ.FT. XMRP = 1089.6000 IN. XO
LREF = 1290.3000 IN. YMRP = .0000 IN. YO
BREF = 1290.3000 IN. ZMRP = 375.0000 IN. ZO
SCALE = .0100

PARAMETRIC DATA

DLT-Y = .000 ALPHA = 5.000
BETA = .000 DLTALF = -5.000
DLTBTA = .000 MACH = 5.930
AILRON = 15.000 ELEVON = .000
GRID = 12.000

RUN NO. 494/ 0 GRADIENT INTERVAL = -5.00/ 5.00

DLT-X	DLT-Z	CN	CA	CLM	CY	CYN	CBL	XCP/L	CPBI	CPB2	CPBC
.000	.000	.04817	.07054	-.00918	.00077	-.00049	.00318	.85887	-.02309	-.02267	-.02212
	GRADIENT	.00000	.00000	.00000	.00000	.00000	.00000	.00000	.00000	.00000	.00000

AEDC VA422(IA17) ISOLATED ORBITER (RTR521) (24 JUL 75)

REFERENCE DATA

SREF = 2690.0000 SQ.FT. XMRP = 1089.6000 IN. XO
LREF = 1290.3000 IN. YMRP = .0000 IN. YO
BREF = 1290.3000 IN. ZMRP = 375.0000 IN. ZO
SCALE = .0100

PARAMETRIC DATA

DLT-Y = .000 ALPHA = -5.000
BETA = .000 DLTALF = 5.000
DLTBTA = .000 MACH = 5.930
AILRON = 15.000 ELEVON = .000
GRID = 11.000

RUN NO. 507/ 0 GRADIENT INTERVAL = -5.00/ 5.00

DLT-X	DLT-Z	CN	CA	CLM	CY	CYN	CBL	XCP/L	CPBI	CPB2	CPBC
.000	.000	-.14204	.09258	-.01340	-.00018	.00057	.00317	.56568	-.02041	-.01989	-.01982
	GRADIENT	.00000	.00000	.00000	.00000	.00000	.00000	.00000	.00000	.00000	.00000

AEDC VA422(IA17) ISOLATED ORBITER (RTR522) (24 JUL 75)

REFERENCE DATA

SREF = 2690.0000 SQ.FT. XMRP = 1089.6000 IN. XO
LREF = 1290.3000 IN. YMRP = .0000 IN. YO
BREF = 1290.3000 IN. ZMRP = 375.0000 IN. ZO
SCALE = .0100

PARAMETRIC DATA

DLT-Y = .000 ALPHA = -10.000
BETA = .000 DLTALF = 10.000
DLTBTA = .000 MACH = 5.930
AILRON = 15.000 ELEVON = .000
GRID = 10.000

RUN NO. 525/ 0 GRADIENT INTERVAL = -5.00/ 5.00

DLT-X	DLT-Z	CN	CA	CLM	CY	CYN	CBL	XCP/L	CPBI	CPB2	CPBC
.000	.000	-.21861	.10397	-.01888	-.00254	.00159	.00389	.58278	-.02206	-.02116	-.02106
	GRADIENT	.00000	.00000	.00000	.00000	.00000	.00000	.00000	.00000	.00000	.00000

AEDC VA422(IA17) ISOLATED ORBITER (RTR523) (24 JUL 75)

REFERENCE DATA

SREF = 2690.0000 SQ.FT. XMRP = 1089.6000 IN. XO
LREF = 1290.3000 IN. YMRP = .0000 IN. YO
BREF = 1290.3000 IN. ZMRP = 375.0000 IN. ZO
SCALE = .0100

PARAMETRIC DATA

DLT-Y = .000 ALPHA = .000
BETA = 3.000 DLTALF = .000
DLTBTA = -3.000 MACH = 5.930
AILRON = .000 ELEVON = 15.000
GRID = 14.000 PO = 94.000

RUN NO. 587/ 0 GRADIENT INTERVAL = -5.00/ 5.00

DLT-X	DLT-Z	CN	CA	CLM	CY	CYN	CBL	XCP/L	CPB1	CPB2	CPBC
.000	.000	-.03995	.08064	-.01473	-.03459	-.00139	-.00057	.29119	-.02786	-.02790	-.02746
	GRADIENT	.00000	.00000	.00000	.00000	.00000	.00000	.00000	.00000	.00000	.00000

AEDC VA422(IA17) ISOLATED ORBITER (RTR524) (24 JUL 75)

REFERENCE DATA

SREF = 2690.0000 SQ.FT. XMRP = 1089.6000 IN. XO
LREF = 1290.3000 IN. YMRP = .0000 IN. YO
BREF = 1290.3000 IN. ZMRP = 375.0000 IN. ZO
SCALE = .0100

PARAMETRIC DATA

DLT-Y = .000 ALPHA = .000
BETA = .000 DLTALF = .000
DLTBTA = .000 MACH = 5.930
AILRON = .000 ELEVON = 15.000
GRID = 13.000 PO = 94.000

RUN NO. 580/ 0 GRADIENT INTERVAL = -5.00/ 5.00

DLT-X	DLT-Z	CN	CA	CLM	CY	CYN	CBL	XCP/L	CPB1	CPB2	CPBC
.000	.000	-.03737	.07883	-.01518	.00046	.00044	-.00033	.25387	-.02105	-.02054	-.02029
	GRADIENT	.00000	.00000	.00000	.00000	.00000	.00000	.00000	.00000	.00000	.00000

AEDC VA422(IA17) ISOLATED ORBITER (RTR525) (24 JUL 75)

REFERENCE DATA

SREF = 2690.0000 SQ.FT. XMRP = 1089.6000 IN. XO
LREF = 1290.3000 IN. YMRP = .0000 IN. YO
BREF = 1290.3000 IN. ZMRP = 375.0000 IN. ZO
SCALE = .0100

PARAMETRIC DATA

DLT-Y = .000 ALPHA = 5.000
BETA = .000 DLTALF = -5.000
DLTBTA = .000 MACH = 5.930
AILRON = .000 ELEVON = 15.000
GRID = 12.000 PO = 94.000

RUN NO. 587/ 0 GRADIENT INTERVAL = -5.00/ 5.00

DLT-X	DLT-Z	CN	CA	CLM	CY	CYN	CBL	XCP/L	CPB1	CPB2	CPBC
.000	.000	.06204	.07328	-.01372	.00031	.00029	-.00047	.87898	-.02365	-.02306	-.02231
	GRADIENT	.00000	.00000	.00000	.00000	.00000	.00000	.00000	.00000	.00000	.00000

AEDC VA422(IA17) ISOLATED ORBITER (RTR526) (24 JUL 75)

REFERENCE DATA

SREF = 2690.0000 SQ.FT. XMRP = 1089.6000 IN. XO
LREF = 1290.3000 IN. YMRP = .0000 IN. YO
BREF = 1290.3000 IN. ZMRP = 375.0000 IN. ZO
SCALE = .0100

PARAMETRIC DATA

DLT-Y = .000 ALPHA = -5.000
BETA = .000 DLTALF = 5.000
DLTBTA = .000 MACH = 5.930
AILRON = .000 ELEVON = 15.000
GRID = 11.000 PO = 94.000

RUN NO. 554/ 0 GRADIENT INTERVAL = -5.00/ 5.00

DLT-X	DLT-Z	CN	CA	CLM	CY	CYN	CBL	XCP/L	CPB1	CPB2	CPBC
.000	.000	-.12828	.09081	-.01709	.00144	.00011	-.00012	.52676	-.02097	-.02038	-.02047
	GRADIENT	.00000	.00000	.00000	.00000	.00000	.00000	.00000	.00000	.00000	.00000

AEDC VA422(IA17) ISOLATED ORBITER (RTR527) (24 JUL 75)

REFERENCE DATA

SREF = 2690.0000 SQ.FT. XMRP = 1089.6000 IN. XO
LREF = 1290.3000 IN. YMRP = .0000 IN. YO
BREF = 1290.3000 IN. ZMRP = 375.0000 IN. ZO
SCALE = .0100

PARAMETRIC DATA

DLT-Y = .000 ALPHA = -10.000
BETA = .000 DLTALF = 10.000
DLTBTA = .000 MACH = 5.930
AILRON = .000 ELEVON = 15.000
GRID = 10.000 PO = 94.000

RUN NO. 541/ 0 GRADIENT INTERVAL = -5.00/ 5.00

DLT-X	DLT-Z	CN	CA	CLM	CY	CYN	CBL	XCP/L	CPB1	CPB2	CPBC
.000	.000	-.20189	.10156	-.02122	.00106	.00033	-.00031	.55489	-.01941	-.01884	-.01863
	GRADIENT	.00000	.00000	.00000	.00000	.00000	.00000	.00000	.00000	.00000	.00000

AEDC VA422(IA17) ISOLATED ORBITER (RTR528) (24 JUL 75)

REFERENCE DATA

SREF = 2690.0000 SQ.FT. XMRP = 1089.6000 IN. XO
LREF = 1290.3000 IN. YMRP = .0000 IN. YO
BREF = 1290.3000 IN. ZMRP = 375.0000 IN. ZO
SCALE = .0100

PARAMETRIC DATA

DLT-Y = .000 ALPHA = 10.000
BETA = .000 DLTALF = -10.000
DLTBTA = .000 MACH = 5.930
AILRON = .000 ELEVON = .000
GRID = 23.000 PO = 94.000

RUN NO. 672/ 0 GRADIENT INTERVAL = -5.00/ 5.00

DLT-X	DLT-Z	CN	CA	CLM	CY	CYN	CBL	XCP/L	CPB1	CPB2	CPBC
.000	.000	.15402	.08227	-.00487	.00084	.00004	-.00004	.69180	-.02860	-.02808	-.02785
	GRADIENT	.00000	.00000	.00000	.00000	.00000	.00000	.00000	.00000	.00000	.00000

AEDC VA422(IA17) ISOLATED ORBITER (RTR529) (24 JUL 75)

REFERENCE DATA

SREF = 2690.0000 SQ.FT. XMRP = 1089.6000 IN. XO
LREF = 1290.3000 IN. YMRP = .0000 IN. YO
BREF = 1290.3000 IN. ZMRP = 375.0000 IN. ZO
SCALE = .0100

PARAMETRIC DATA

DLT-Y = .000 ALPHA = 10.000
BETA = 3.000 DLTALF = -10.000
DLTBTA = -3.000 MACH = 5.930
AILRON = .000 ELEVON = .000
GRID = 27.000 PO = 94.000

RUN NO. 702/ 0 GRADIENT INTERVAL = -5.00/ 5.00

DLT-X	DLT-Z	CN	CA	CLM	CY	CYN	CBL	XCP/L	CPB1	CPB2	CPBC
.000	.000	.15272	.06125	-.00476	-.02776	-.00230	-.00173	.69120	-.02540	-.02537	-.02475
	GRADIENT	.00000	.00000	.00000	.00000	.00000	.00000	.00000	.00000	.00000	.00000

AEDC VA422(IA17) ISOLATED ORBITER (RTR530) (24 JUL 75)

REFERENCE DATA

SREF = 2690.0000 SQ.FT. XMRP = 1089.6000 IN. XO
LREF = 1290.3000 IN. YMRP = .0000 IN. YO
BREF = 1290.3000 IN. ZMRP = 375.0000 IN. ZO
SCALE = .0100

PARAMETRIC DATA

DLT-Y = .000 ALPHA = .000
BETA = .000 DLTALF = .000
DLTBTA = .000 MACH = 7.980
AILRON = .000 ELEVON = .000
GRID = 16.000 PO = 420.000

RUN NO. 748/ 0 GRADIENT INTERVAL = -5.00/ 5.00

DLT-X	DLT-Z	CN	CA	CLM	CY	CYN	CBL	XCP/L	CPB1	CPB2	CPBC
.000	.000	-.05246	.07369	-.01136	.00066	.00028	-.00008	.44342	-.01284	-.01214	-.01249
	GRADIENT	.00000	.00000	.00000	.00000	.00000	.00000	.00000	.00000	.00000	.00000

AEDC VA422(IA17) ISOLATED ORBITER (RTR531) (24 JUL 75)

REFERENCE DATA

SREF = 2690.0000 SQ.FT. XMRP = 1089.6000 IN. XO
LREF = 1290.3000 IN. YMRP = .0000 IN. YO
BREF = 1290.3000 IN. ZMRP = 375.0000 IN. ZO
SCALE = .0100

PARAMETRIC DATA

DLT-Y = .000 ALPHA = .000
BETA = 3.000 DLTALF = .000
DLTBTA = -3.000 MACH = 7.980
AILRON = .000 ELEVON = .000
GRID = 17.000 PO = 300.000

RUN NO. 778/ 0 GRADIENT INTERVAL = -5.00/ 5.00

DLT-X	DLT-Z	CN	CA	CLM	CY	CYN	CBL	XCP/L	CPB1	CPB2	CPBC
.000	.000	-.05393	.07448	-.01113	-.03074	-.00209	.00022	.45360	-.01327	-.01326	-.01296
	GRADIENT	.00000	.00000	.00000	.00000	.00000	.00000	.00000	.00000	.00000	.00000

AEDC VA422(1A17) ISOLATED ORBITER (RTR532) (24 JUL 75)

REFERENCE DATA

SREF = 2690.0000 SQ.FT. XMRP = 1089.6000 IN. XO
LREF = 1290.3000 IN. YMRP = .0000 IN. YO
BREF = 1290.3000 IN. ZMRP = 375.0000 IN. ZO
SCALE = .0100

PARAMETRIC DATA

DLT-Y = .000 ALPHA = 5.000
BETA = 3.000 DLTALF = -5.000
DLTBTA = -3.000 MACH = 7.980
AILRON = .000 ELEVON = .000
GRID = 25.000 PO = 420.000

RUN NO. 836/ 0 GRADIENT INTERVAL = -5.00/ 5.00

DLT-X	DLT-Z	CN	CA	CLM	CY	CYN	CBL	XCP/L	CPB1	CPB2	CPBC
.000	.000	.03034	.08358	-.00738	-.02837	-.00253	-.00070	.90316	-.01216	-.01241	-.01135
	GRADIENT	.00000	.00000	.00000	.00000	.00000	.00000	.00000	.00000	.00000	.00000

AEDC VA422(1A17) ISOLATED ORBITER (RTR533) (24 JUL 75)

REFERENCE DATA

SREF = 2690.0000 SQ.FT. XMRP = 1089.6000 IN. XO
LREF = 1290.3000 IN. YMRP = .0000 IN. YO
BREF = 1290.3000 IN. ZMRP = 375.0000 IN. ZO
SCALE = .0100

PARAMETRIC DATA

DLT-Y = .000 ALPHA = -5.000
BETA = 3.000 DLTALF = 5.000
DLTBTA = -3.000 MACH = 7.980
AILRON = .000 ELEVON = .000
GRID = 18.000 PO = -300.000

RUN NO. 867/ 0 GRADIENT INTERVAL = -5.00/ 5.00

DLT-X	DLT-Z	CN	CA	CLM	CY	CYN	CBL	XCP/L	CPB1	CPB2	CPBC
.000	.000	-.13110	.09006	-.01445	-.03578	-.00191	.00094	.54975	-.01160	-.01164	-.01114
	GRADIENT	.00000	.00000	.00000	.00000	.00000	.00000	.00000	.00000	.00000	.00000

AEDC VA422(1A17) ISOLATED ORBITER (RTR534) (24 JUL 75)

REFERENCE DATA

SREF = 2690.0000 SQ.FT. XMRP = 1089.6000 IN. XO
LREF = 1290.3000 IN. YMRP = .0000 IN. YO
BREF = 1290.3000 IN. ZMRP = 375.0000 IN. ZO
SCALE = .0100

PARAMETRIC DATA

DLT-Y = .000 ALPHA = .000
BETA = .000 DLTALF = .000
DLTBTA = .000 MACH = 7.980
AILRON = 15.000 ELEVON = .000
GRID = 21.000 PO = 300.000

RUN NO. 890/ 0 GRADIENT INTERVAL = -5.00/ 5.00

DLT-X	DLT-Z	CN	CA	CLM	CY	CYN	CBL	XCP/L	CPB1	CPB2	CPBC
.000	.000	-.04979	.07550	-.01159	-.00014	.00032	.00188	.42723	-.00496	-.00543	-.00401
	GRADIENT	.00000	.00000	.00000	.00000	.00000	.00000	.00000	.00000	.00000	.00000

AEDC VA422(IA17) ISOLATED ORBITER (RTR535) (24 JUL 75)

REFERENCE DATA

SREF = 2690.0000 SQ.FT. XMRP = 1089.6000 IN. XO
LREF = 1290.3000 IN. YMRP = .0000 IN. YO
BREF = 1290.3000 IN. ZMRP = 375.0000 IN. ZO
SCALE = .0100

PARAMETRIC DATA

DLT-Y = .000 ALPHA = -5.000
BETA = .000 DLTALF = 5.000
DLTBTA = .000 MACH = 7.980
AILRON = 15.000 ELEVON = .000
GRID = 20.000 PO = 300.000

RUN NO. 894/ 0 GRADIENT INTERVAL = -5.00/ 5.00

DLT-X	DLT-Z	CN	CA	CLM	CY	CYN	CBL	XCP/L	CPB1	CPB2	CPBC
.000	.000	-.13176	.09051	-.01366	-.00033	.00058	.00254	.55635	-.00616	-.00593	-.00532
	GRADIENT	.00000	.00000	.00000	.00000	.00000	.00000	.00000	.00000	.00000	.00000

AEDC VA422(IA17) ISOLATED ORBITER (RTR536) (24 JUL 75)

REFERENCE DATA

SREF = 2690.0000 SQ.FT. XMRP = 1089.6000 IN. XO
LREF = 1290.3000 IN. YMRP = .0000 IN. YO
BREF = 1290.3000 IN. ZMRP = 375.0000 IN. ZO
SCALE = .0100

PARAMETRIC DATA

DLT-Y = .000 ALPHA = .000
BETA = .000 DLTALF = .000
DLTBTA = .000 MACH = 7.980
AILRON = .000 ELEVON = -20.000
GRID = 21.000 PO = 300.000

RUN NO. 906/ 0 GRADIENT INTERVAL = -5.00/ 5.00

DLT-X	DLT-Z	CN	CA	CLM	CY	CYN	CBL	XCP/L	CPB1	CPB2	CPBC
.000	.000	-.06458	.07657	-.00805	.00059	.00024	-.00031	.53540	-.00271	-.00335	-.00218
	GRADIENT	.00000	.00000	.00000	.00000	.00000	.00000	.00000	.00000	.00000	.00000

AEDC VA422(IA17) ISOLATED ORBITER (RTR537) (24 JUL 75)

REFERENCE DATA

SREF = 2690.0000 SQ.FT. XMRP = 1089.6000 IN. XO
LREF = 1290.3000 IN. YMRP = .0000 IN. YO
BREF = 1290.3000 IN. ZMRP = 375.0000 IN. ZO
SCALE = .0100

PARAMETRIC DATA

DLT-Y = .000 ALPHA = -5.000
BETA = .000 DLTALF = 5.000
DLTBTA = .000 MACH = 7.980
AILRON = .000 ELEVON = -20.000
GRID = 20.000 PO = 300.000

RUN NO. 902/ 0 GRADIENT INTERVAL = -5.00/ 5.00

DLT-X	DLT-Z	CN	CA	CLM	CY	CYN	CBL	XCP/L	CPB1	CPB2	CPBC
.000	.000	-.15249	.09428	-.00870	.00082	.00011	-.00035	.60292	-.00631	-.00593	-.00518
	GRADIENT	.00000	.00000	.00000	.00000	.00000	.00000	.00000	.00000	.00000	.00000

ORIGINAL PAGE IS OF POOR QUALITY

AEDC VA422(IA17) ISOLATED ORBITER (RTR538) (24 JUL 75)

REFERENCE DATA

SREF = 2690.0000 SQ.FT. XMRP = 1089.6000 IN. XO
LREF = 1290.3000 IN. YMRP = .0000 IN. YO
BREF = 1290.3000 IN. ZMRP = 375.0000 IN. ZO
SCALE = .0100

PARAMETRIC DATA

DLT-Y = .000 ALPHA = .000
BETA = .000 DLTALF = .000
DLTBTA = .000 MACH = 7.980
AILRON = .000 ELEVON = -40.000
GRID = 21.000 PO = 300.000

RUN NO. 917/ 0 GRADIENT INTERVAL = -5.00/ 5.00

DLT-X	DLT-Z	CN	CA	CLM	CY	CYN	CBL	XCP/L	CPB1	CPB2	CPBC
.000	.000	-.08861	.09095	-.00354	.00056	.00008	-.00024	.62009	-.00528	-.00485	-.00395
	GRADIENT	.00000	.00000	.00000	.00000	.00000	.00000	.00000	.00000	.00000	.00000

AEDC VA422(IA17) ISOLATED ORBITER (RTR539) (24 JUL 75)

REFERENCE DATA

SREF = 2690.0000 SQ.FT. XMRP = 1089.6000 IN. XO
LREF = 1290.3000 IN. YMRP = .0000 IN. YO
BREF = 1290.3000 IN. ZMRP = 375.0000 IN. ZO
SCALE = .0100

PARAMETRIC DATA

DLT-Y = .000 ALPHA = -5.000
BETA = .000 DLTALF = 5.000
DLTBTA = .000 MACH = 7.980
AILRON = .000 ELEVON = -40.000
GRID = 20.000 PO = 300.000

RUN NO. 921/ 0 GRADIENT INTERVAL = -5.00/ 5.00

DLT-X	DLT-Z	CN	CA	CLM	CY	CYN	CBL	XCP/L	CPB1	CPB2	CPBC
.000	.000	-.19559	.12175	-.00004	.00126	.00004	-.00036	.65981	-.00448	-.00361	-.00269
	GRADIENT	.00000	.00000	.00000	.00000	.00000	.00000	.00000	.00000	.00000	.00000

AEDC VA422(IA17) ISOLATED ORBITER (RTR540) (24 JUL 75)

REFERENCE DATA

SREF = 2690.0000 SQ.FT. XMRP = 1089.6000 IN. XO
LREF = 1290.3000 IN. YMRP = .0000 IN. YO
BREF = 1290.3000 IN. ZMRP = 375.0000 IN. ZO
SCALE = .0100

PARAMETRIC DATA

DLT-Y = .000 ALPHA = -10.000
BETA = 3.000 DLTALF = 10.000
DLTBTA = -3.000 MACH = 7.980
AILRON = .000 ELEVON = .000
GRID = 8.000 PO = 300.000

RUN NO. 937/ 0 GRADIENT INTERVAL = -5.00/ 5.00

DLT-X	DLT-Z	CN	CA	CLM	CY	CYN	CBL	XCP/L	CPB1	CPB2	CPBC
.000	.000	-.20071	.10191	-.01907	-.04161	-.00042	.00207	.56498	.00482	.00480	.00392
	GRADIENT	.00000	.00000	.00000	.00000	.00000	.00000	.00000	.00000	.00000	.00000

AEDC VA422(IA17) ISOLATED ORBITER (RTR541) (24 JUL 75)

REFERENCE DATA

SREF = 2690.0000 SQ.FT. XMRP = 1089.6000 IN. XO
LREF = 1290.3000 IN. YMRP = .0000 IN. YO
BREF = 1290.3000 IN. ZMRP = 375.0000 IN. ZO
SCALE = .0100

PARAMETRIC DATA

DLT-Y = .000 ALPHA = -5.000
BETA = .000 DLTALF = 5.000
DLTBTA = .000 MACH = 7.980
AILRON = .000 ELEVON = .000
GRID = 19.000 PO = 300.000

RUN NO. 987/ 0 GRADIENT INTERVAL = -5.00/ 5.00

DLT-X	DLT-Z	CN	CA	CLM	CY	CYN	CBL	XCP/L	CPB1	CPB2	CPBC
.000	.000	-.12953	.08879	-.01426	.00122	.00021	-.00006	.54993	-.01180	-.01180	-.01124
	GRADIENT	.00000	.00000	.00000	.00000	.00000	.00000	.00000	.00000	.00000	.00000

AEDC VA422(IA17) ISOLATED ORBITER (RTR542) (24 JUL 75)

REFERENCE DATA

SREF = 2690.0000 SQ.FT. XMRP = 1089.6000 IN. XO
LREF = 1290.3000 IN. YMRP = .0000 IN. YO
BREF = 1290.3000 IN. ZMRP = 375.0000 IN. ZO
SCALE = .0100

PARAMETRIC DATA

DLT-Y = .000 ALPHA = 5.000
BETA = .000 DLTALF = -5.000
DLTBTA = .000 MACH = 7.980
AILRON = .000 ELEVON = .000
GRID = 24.000 PO = 300.000

RUN NO. 997/ 0 GRADIENT INTERVAL = -5.00/ 5.00

DLT-X	DLT-Z	CN	CA	CLM	CY	CYN	CBL	XCP/L	CPB1	CPB2	CPBC
.000	.000	.03182	.06613	-.00745	.00040	.00013	-.00010	.89414	-.01292	-.01293	-.01183
	GRADIENT	.00000	.00000	.00000	.00000	.00000	.00000	.00000	.00000	.00000	.00000

AEDC VA422(IA17) ORB AND ET SEPARATING(ORB DATA) (RTR601) (24 JUL 75)

REFERENCE DATA

SREF = 2690.0000 SQ.FT. XMRP = 1089.6000 IN. XO
LREF = 1290.3000 IN. YMRP = .0000 IN. YO
BREF = 1290.3000 IN. ZMRP = 375.0000 IN. ZO
SCALE = .0100

PARAMETRIC DATA

DLT-Y = -50.000 ALPHA = .000
BETA = .000 DLTALF = .000
DLTBTA = -3.000 MACH = 5.930
AILRON = .000 ELEVON = .000
GRID = 1.000

RUN NO. 95/ 0 GRADIENT INTERVAL = -5.00/ 5.00

DLT-X	DLT-Z	CN	CA	CLM	CY	CYN	CBL	XCP/L	CPB1	CPB2	CPBC
.543	19.025	-.01564	.08212	-.01150	.00587	-.00021	.00160	-.07570	-.02794	-.02747	-.02663
.526	99.541	-.00720	.09041	-.00232	.00221	-.00099	.00139	.33794	-.02794	-.02753	-.02667
.639	200.490	.01747	.08540	-.00120	.00132	-.00040	.00115	.72891	-.02804	-.02765	-.02684
.612	302.130	.03918	.08290	-.01380	.00006	.00042	.00026	1.01230	-.02806	-.02767	-.02686
.648	400.990	-.00700	.07570	-.01643	.00101	.00020	-.00048	-1.68820	-.02818	-.02774	-.02695
.525	500.080	-.04254	.07573	-.01293	.00123	.00019	-.00009	.35613	-.02829	-.02788	-.02712
.535	600.110	-.04841	.07677	-.01118	.00112	.00018	-.00008	.42913	-.02829	-.02788	-.02714
	GRADIENT	.00000	.00000	.00000	.00000	.00000	.00000	.00000	.00000	.00000	.00000

RUN NO. 96/ 0 GRADIENT INTERVAL = -5.00/ 5.00

DLT-X	DLT-Z	CN	CA	CLM	CY	CYN	CBL	XCP/L	CPB1	CPB2	CPBC
200.470	23.202	.01202	.09200	.00246	.00327	-.00137	.00223	.45523	-.02867	-.02813	-.02752
200.580	99.370	.01283	.08394	.00252	.00120	-.00087	.00159	.46332	-.02894	-.02835	-.02778
200.530	199.510	.03916	.08468	-.00749	.00019	.00036	.00030	.85137	-.02894	-.02820	-.02753
200.500	298.530	.02499	.07720	-.01647	.00087	.00026	-.00106	1.31910	-.02881	-.02800	-.02733
200.460	398.090	-.02820	.07536	-.01544	.00112	.00020	-.00018	.11241	-.02866	-.02786	-.02718
200.500	499.960	-.04817	.07573	-.01136	.00129	.00019	-.00008	.42424	-.02854	-.02778	-.02708
200.570	600.150	-.04858	.07697	-.01119	.00115	.00018	-.00008	.42949	-.02823	-.02750	-.02669
	GRADIENT	.00000	.00000	.00000	.00000	.00000	.00000	.00000	.00000	.00000	.00000

AEDC VA422(IA17) ORB AND ET SEPARATING(ORB DATA) (RTR602) (24 JUL 75)

REFERENCE DATA

SREF = 2690.0000 SQ.FT. XMRP = 1089.6000 IN. XO
LREF = 1290.3000 IN. YMRP = .0000 IN. YO
BREF = 1290.3000 IN. ZMRP = 375.0000 IN. ZO
SCALE = .0100

PARAMETRIC DATA

DLT-Y = -60.000 ALPHA = .000
BETA = .000 DLTALF = -10.000
DLTBTA = -3.000 MACH = 5.930
AILRON = .000 ELEVON = .000
GRID = 1.000

RUN NO. 97/ 0 GRADIENT INTERVAL = -5.00/ 5.00

DLT-X	DLT-Z	CN	CA	CLM	CY	CYN	CBL	XCP/L	CPB1	CPB2	CPBC
.488	403.690	.15023	.06229	-.02948	.00092	.00012	.00067	.85608	-.02724	-.02679	-.02566
.555	501.800	.03399	.07439	-.02168	.00076	.00027	-.00118	1.29790	-.02776	-.02727	-.02629
.566	600.250	-.03182	.07440	-.01558	.00110	.00019	-.00011	.17040	-.02824	-.02773	-.02684
-.175	802.060	-.04841	.07690	-.01116	.00125	.00018	-.00008	.42939	-.02856	-.02806	-.02739
	GRADIENT	.00000	.00000	.00000	.00000	.00000	.00000	.00000	.00000	.00000	.00000

RUN NO. 98/ 0 GRADIENT INTERVAL = -5.00/ 5.00

DLT-X	DLT-Z	CN	CA	CLM	CY	CYN	CBL	XCP/L	CPB1	CPB2	CPBC
200.440	398.540	.09766	.07413	-.02784	-.00032	.00046	-.00237	.94507	-.02637	-.02600	-.02468
200.460	497.290	-.00363	.07381	-.01975	.00097	.00022	-.00041	.00000	-.02533	-.02508	-.02346
200.470	599.640	-.04551	.07589	-.01206	.00121	.00018	-.00008	.39500	-.02474	-.02456	-.02297
200.520	800.340	-.04801	.07710	-.01124	.00126	.00018	-.00008	.42597	-.02402	-.02383	-.02221
	GRADIENT	.00000	.00000	.00000	.00000	.00000	.00000	.00000	.00000	.00000	.00000

AEDC VA422(IA17) ORB AND ET SEPARATING(ORB DATA) (RTR603) (24 JUL 75)

REFERENCE DATA

SREF = 2690.0000 SQ.FT. XMRP = 1089.6000 IN. XO
LREF = 1290.3000 IN. YMRP = .0000 IN. YO
BREF = 1290.3000 IN. ZMRP = 375.0000 IN. ZO
SCALE = .0100

PARAMETRIC DATA

DLT-Y = -60.000 ALPHA = .000
BETA = .000 DLTALF = -20.000
DLTBTA = -3.000 MACH = 5.930
AILRON = .000 ELEVON = .000
GRID = 1.000

RUN NO. 99/ 0 GRADIENT INTERVAL = -5.00/ 5.00

DLT-X	DLT-Z	CN	CA	CLM	CY	CYN	CBL	XCP/L	CPB1	CPB2	CPBC
.602	802.140	.07419	.06732	-.03769	.00268	-.00019	.00097	1.16800	-.01759	-.01801	-.01539
.553	1000.300	-.04820	.07293	-.01114	.00128	.00018	-.00008	.42896	-.02168	-.02160	-.01945
	GRADIENT	.00000	.00000	.00000	.00000	.00000	.00000	.00000	.00000	.00000	.00000

RUN NO. 100/ 0 GRADIENT INTERVAL = -5.00/ 5.00

DLT-X	DLT-Z	CN	CA	CLM	CY	CYN	CBL	XCP/L	CPB1	CPB2	CPBC
200.510	798.610	-.02610	.07072	-.01830	.00135	.00016	.00028	-.04107	-.01714	-.01766	-.01534
200.370	1000.200	-.04775	.07493	-.01123	.00121	.00016	-.00008	.42465	-.01556	-.01600	-.01370
	GRADIENT	.00000	.00000	.00000	.00000	.00000	.00000	.00000	.00000	.00000	.00000

ORIGINAL PAGE IS OF POOR QUALITY

AEDC VA422(IA17) ORB AND ET SEPARATING(ORB DATA) (RTR701) (24 JUL 75)

REFERENCE DATA

SREF = 2690.0000 SQ.FT. XMRP = 1089.6000 IN. XO
LREF = 1290.3000 IN. YMRP = .0000 IN. YO
BREF = 1290.3000 IN. ZMRP = 375.0000 IN. ZO
SCALE = .0100

PARAMETRIC DATA

DLT-X = .000 ALPHA = .000
BETA = .000 DLTALF = .000
DLTBTA = 3.000 MACH = 5.930
AILRON = .000 ELEVON = .000
GRID = 2.000

RUN NO. 104/ 0 GRADIENT INTERVAL = -5.00/ 5.00

DLT-Z	DLT-Y	CN	CA	CLM	CY	CYN	CBL	XCP/L	CPB1	CPB2	CPBC
20.015	-202.240	-.00119	.08458	-.00817	-.00935	-.00666	-.00436	.00000	-.02716	-.02687	-.02597
19.733	-150.180	-.00385	.08514	-.01179	-.00297	-.00296	-.00456	.00000	-.02736	-.02706	-.02618
19.668	-100.930	-.01120	.08491	-.01395	-.00083	-.00132	-.00427	-.58560	-.02755	-.02722	-.02641
19.870	-50.802	-.01788	.08285	-.01397	-.00079	-.00076	-.00345	-.12122	-.02787	-.02748	-.02676
20.284	-.882	-.02123	.08113	-.01269	-.00189	-.00050	-.00225	.06220	-.02826	-.02784	-.02718
20.318	49.031	-.01757	.08104	-.01183	-.00242	-.00011	-.00148	-.01348	-.02859	-.02814	-.02755
20.367	98.687	-.01369	.08353	-.01149	-.00361	.00096	-.00076	-.17946	-.02887	-.02842	-.02787
20.461	149.940	-.00617	.08579	-.01080	-.00177	.00203	.00001	-1.09030	-.02918	-.02872	-.02819
20.883	199.290	.00899	.08744	-.00804	.00240	.00450	.00067	1.55470	-.02943	-.02896	-.02845
	GRADIENT	.00000	.00000	.00000	.00000	.00000	.00000	.00000	.00000	.00000	.00000

RUN NO. 103/ 0 GRADIENT INTERVAL = -5.00/ 5.00

DLT-Z	DLT-Y	CN	CA	CLM	CY	CYN	CBL	XCP/L	CPB1	CPB2	CPBC
199.650	-200.330	.00255	.07982	-.00668	-.01211	.00033	.00010	.00000	-.02688	-.02646	-.02560
199.790	-150.980	.00875	.08113	-.00524	-.00978	-.00011	.00078	1.25880	-.02682	-.02633	-.02548
199.790	-101.860	.01165	.08249	-.00349	-.00647	-.00052	.00077	.95141	-.02687	-.02635	-.02550
199.990	-51.209	.01525	.08255	-.00208	-.00401	-.00032	.00069	.79664	-.02685	-.02638	-.02555
199.990	-2.354	.01687	.08381	-.00146	-.00081	-.00022	.00016	.74628	-.02692	-.02647	-.02566
200.070	48.541	.01754	.08393	-.00135	.00157	.00049	-.00141	.73677	-.02703	-.02661	-.02582
200.280	98.263	.01815	.08236	-.00192	.00494	.00065	-.00210	.76551	-.02713	-.02674	-.02600
200.190	148.870	.01720	.08230	-.00306	.00702	.00101	-.00196	.83788	-.02707	-.02671	-.02603
202.330	199.060	.01683	.08160	-.00466	.00959	.00088	-.00183	.93680	-.02700	-.02667	-.02601
	GRADIENT	.00000	.00000	.00000	.00000	.00000	.00000	.00000	.00000	.00000	.00000

RUN NO. 102/ 0 GRADIENT INTERVAL = -5.00/ 5.00

DLT-Z	DLT-Y	CN	CA	CLM	CY	CYN	CBL	XCP/L	CPB1	CPB2	CPBC
397.750	-198.860	-.00848	.07421	-.01788	-.00187	.00084	-.00513	-1.44870	-.02596	-.02562	-.02497
400.070	-151.080	-.00727	.07393	-.01778	-.00132	.00067	-.00425	-1.78600	-.02601	-.02567	-.02500
400.130	-101.310	-.00720	.07401	-.01741	-.00070	.00053	-.00316	-1.75990	-.02608	-.02572	-.02505
400.120	-50.886	-.00752	.07416	-.01694	-.00016	.00040	-.00197	-1.59390	-.02613	-.02578	-.02508
400.090	-1.185	-.00805	.07422	-.01656	.00052	.00030	-.00085	-1.39750	-.02624	-.02589	-.02522
400.040	49.105	-.00814	.07421	-.01652	.00104	.00022	.00021	-1.36900	-.02639	-.02605	-.02539
400.050	99.075	-.00768	.07417	-.01683	.00169	.00012	.00128	-1.53100	-.02653	-.02621	-.02555
400.060	149.200	-.00729	.07414	-.01727	.00232	-.00000	.00239	-1.71070	-.02669	-.02636	-.02573
400.080	199.270	-.00704	.07420	-.01773	.00301	-.00014	.00351	-1.85730	-.02678	-.02648	-.02583
	GRADIENT	.00000	.00000	.00000	.00000	.00000	.00000	.00000	.00000	.00000	.00000

AEDC VA422(IA17) ORB AND ET SEPARATING(ORB DATA) (RTR702) (24 JUL 75)

REFERENCE DATA

SREF = 2690.0000 SQ.FT. XMRP = 1089.6000 IN. XO
LREF = 1290.3000 IN. YMRP = .0000 IN. YO
BREF = 1290.3000 IN. ZMRP = 375.0000 IN. ZO
SCALE = .0100

PARAMETRIC DATA

DLT-X = .000 ALPHA = .000
BETA = .000 DLTALF = .000
DLTBTA = .000 MACH = 5.930
AILRON = .000 ELEVON = .000
GRID = 2.000

RUN NO. 105/ 0 GRADIENT INTERVAL = -5.00/ 5.00

DLT-Z	DLT-Y	CN	CA	CLM	CY	CYN	CBL	XCP/L	CPB1	CPB2	CPBC
20.571	-201.380	.01257	.08642	-.01013	-.00438	-.00431	-.00423	1.46600	-.03137	-.03100	-.03041
20.620	-151.250	.00207	.08624	-.01201	-.00017	-.00218	-.00283	.00000	-.03124	-.03090	-.03032
20.176	-101.030	-.01286	.08425	-.01235	.00221	-.00117	-.00172	-.30036	-.03107	-.03078	-.03018
20.021	-50.783	-.01937	.08230	-.01193	.00143	-.00051	-.00098	.04401	-.03090	-.03066	-.03002
20.164	-1.203	-.02032	.08088	-.01174	.00125	-.00002	.00010	.08202	-.03076	-.03054	-.02990
20.135	47.677	-.01856	.08239	-.01228	.00033	.00062	.00117	-.00180	-.03063	-.03042	-.02975
19.602	98.928	-.01705	.08444	-.01233	-.00010	.00150	.00157	-.06344	-.03059	-.03039	-.02973
19.496	148.240	-.00588	.08630	-.01176	.00192	.00263	.00207	-1.34000	-.03048	-.03025	-.02962
19.752	197.210	.00788	.08690	-.00931	.00766	.00557	.00377	1.84070	-.03038	-.03012	-.02950
	GRADIENT	.00000	.00000	.00000	.00000	.00000	.00000	.00000	.00000	.00000	.00000

RUN NO. 106/ 0 GRADIENT INTERVAL = -5.00/ 5.00

DLT-Z	DLT-Y	CN	CA	CLM	CY	CYN	CBL	XCP/L	CPB1	CPB2	CPBC
200.150	-200.630	.01023	.08098	-.00561	-.00999	-.00013	.00081	1.20830	-.03154	-.03098	-.03026
200.380	-150.990	.01368	.08204	-.00412	-.00685	-.00050	.00108	.96105	-.03133	-.03074	-.02994
200.270	-101.450	.01479	.08253	-.00243	-.00394	-.00062	.00120	.82454	-.03101	-.03049	-.02956
200.150	-50.783	.01699	.08334	-.00172	-.00134	-.00035	.00128	.76123	-.03059	-.03012	-.02906
199.980	-1.154	.01524	.08416	-.00129	.00140	.00005	-.00016	.74459	-.03018	-.02973	-.02857
200.120	49.163	.01692	.08320	-.00178	.00417	.00047	-.00160	.76514	-.02981	-.02936	-.02813
199.910	98.546	.01468	.08244	-.00256	.00672	.00079	-.00149	.83426	-.02943	-.02895	-.02771
199.830	149.750	.01346	.08227	-.00401	.00886	.00090	-.00136	.95814	-.02912	-.02862	-.02736
199.790	199.210	.01042	.08080	-.00592	.01226	.00038	-.00072	1.22860	-.02896	-.02844	-.02722
	GRADIENT	.00000	.00000	.00000	.00000	.00000	.00000	.00000	.00000	.00000	.00000

RUN NO. 107/ 0 GRADIENT INTERVAL = -5.00/ 5.00

DLT-Z	DLT-Y	CN	CA	CLM	CY	CYN	CBL	XCP/L	CPB1	CPB2	CPBC
400.040	-201.490	-.00813	.07428	-.01779	-.00125	.00068	-.00429	-1.52960	-.02838	-.02783	-.02684
400.050	-150.870	-.00792	.07419	-.01745	-.00083	.00054	-.00328	-1.54400	-.02846	-.02790	-.02693
400.000	-100.850	-.00820	.07443	-.01705	-.00030	.00042	-.00230	-1.41830	-.02855	-.02792	-.02697
400.170	-51.225	-.00868	.07446	-.01661	.00038	.00032	-.00116	-1.25390	-.02855	-.02793	-.02695
400.040	-1.296	-.00885	.07449	-.01640	.00089	.00022	-.00001	-1.19440	-.02861	-.02795	-.02695
400.040	49.017	-.00860	.07446	-.01664	.00160	.00013	.00107	-1.27410	-.02870	-.02801	-.02700
400.040	99.468	-.00806	.07448	-.01703	.00215	.00002	.00210	-1.45310	-.02874	-.02804	-.02699
400.140	149.580	-.00783	.07441	-.01744	.00283	-.00010	.00318	-1.56790	-.02886	-.02814	-.02708
398.100	198.650	-.00899	.07453	-.01777	.00348	-.00028	.00433	-1.31640	-.02887	-.02815	-.02707
	GRADIENT	.00000	.00000	.00000	.00000	.00000	.00000	.00000	.00000	.00000	.00000

ORIGINAL PAGE IS OF POOR QUALITY

AEDC VA422(IA17) ORB AND ET SEPARATING(ORB DATA) (RTR703) (24 JUL 75)

REFERENCE DATA

SREF = 2690.0000 SQ.FT. XMRP = 1089.6000 IN. XO
LREF = 1290.3000 IN. YMRP = .0000 IN. YO
BREF = 1290.3000 IN. ZMRP = 375.0000 IN. ZO
SCALE = .0100

PARAMETRIC DATA

DLT-X = .000 ALPHA = .000
BETA = .000 DLTALF = .000
DLTBTA = -3.000 MACH = 5.930
AILRON = .000 ELEVON = .000
GRID = 2.000

RUN NO. 110/ 0 GRADIENT INTERVAL = -5.00/ 5.00

DLT-Z	DLT-Y	CN	CA	CLM	CY	CYN	CBL	XCP/L	CPB1	CPB2	CPBC
20.091	-202.120	.01800	.08697	-.00904	-.00087	-.00383	-.00149	1.16220	-.02713	-.02682	-.02575
19.195	-150.920	-.00139	.08537	-.01107	.00488	-.00152	.00001	.00000	-.02735	-.02698	-.02604
19.775	-100.940	-.01057	.08315	-.01108	.00622	-.00073	.00063	-.38750	-.02771	-.02732	-.02650
19.754	-51.206	-.01888	.08026	-.01154	.00565	-.00011	.00178	.04872	-.02818	-.02773	-.02701
19.774	-1.225	-.02277	.08019	-.01299	.00405	.00064	.00246	.08966	-.02859	-.02811	-.02746
19.860	48.689	-.02230	.08285	-.01440	.00235	.00085	.00345	.01396	-.02896	-.02844	-.02784
20.211	99.135	-.01569	.08477	-.01417	.00265	.00156	.00401	-.24300	-.02931	-.02876	-.02820
20.620	149.430	-.00532	.08588	-.01226	.00485	.00330	.00476	-1.64440	-.02957	-.02901	-.02847
20.375	199.320	-.00485	.08530	-.00860	.01296	.00709	.00441	-1.11460	-.02975	-.02919	-.02865
	GRADIENT	.00000	.00000	.00000	.00000	.00000	.00000	.00000	.00000	.00000	.00000

RUN NO. 109/ 0 GRADIENT INTERVAL = -5.00/ 5.00

DLT-Z	DLT-Y	CN	CA	CLM	CY	CYN	CBL	XCP/L	CPB1	CPB2	CPBC
199.880	-201.420	.01670	.08129	-.00427	-.00722	-.00073	.00154	.91589	-.02738	-.02688	-.02582
199.950	-151.320	.01640	.08226	-.00230	-.00399	-.00090	.00173	.80046	-.02759	-.02699	-.02599
200.130	-101.150	.01757	.08259	-.00139	-.00176	-.00048	.00188	.73933	-.02782	-.02718	-.02626
200.140	-50.490	.01591	.08413	-.00102	.00139	-.00032	.00101	.72411	-.02800	-.02736	-.02649
200.090	-1.587	.01533	.08417	-.00137	.00405	.00045	-.00057	.74914	-.02800	-.02736	-.02656
200.250	49.055	.01420	.08292	-.00212	.00681	.00056	-.00092	.80963	-.02799	-.02736	-.02658
200.270	98.376	.01230	.08281	-.00372	.00890	.00083	-.00083	.96213	-.02788	-.02730	-.02652
200.430	148.780	.01005	.08158	-.00553	.01196	.00047	-.00058	1.21040	-.02772	-.02725	-.02642
201.870	199.380	.00380	.08078	-.00701	.01484	-.00018	.00022	.00000	-.02784	-.02719	-.02635
	GRADIENT	.00000	.00000	.00000	.00000	.00000	.00000	.00000	.00000	.00000	.00000

RUN NO. 108/ 0 GRADIENT INTERVAL = -5.00/ 5.00

DLT-Z	DLT-Y	CN	CA	CLM	CY	CYN	CBL	XCP/L	CPB1	CPB2	CPBC
400.200	-202.840	-.00567	.07428	-.01778	-.00104	.00060	-.00385	-2.47850	-.02740	-.02689	-.02581
400.050	-150.830	-.00599	.07445	-.01730	-.00041	.00046	-.00269	-2.22830	-.02732	-.02681	-.02574
400.010	-101.440	-.00688	.07453	-.01680	.00016	.00032	-.00143	-1.78070	-.02732	-.02682	-.02579
400.100	-51.477	-.00741	.07456	-.01650	.00078	.00023	-.00035	-1.56660	-.02732	-.02684	-.02585
400.120	-1.440	-.00747	.07452	-.01682	.00153	.00013	.00088	-1.56540	-.02737	-.02690	-.02595
400.050	49.024	-.00676	.07452	-.01697	.00211	.00003	.00192	-1.85000	-.02742	-.02698	-.02604
400.010	98.825	-.00682	.07450	-.01740	.00269	-.00011	.00308	-1.96680	-.02754	-.02711	-.02621
400.050	148.800	-.00707	.07459	-.01780	.00340	-.00026	.00424	-1.85880	-.02763	-.02720	-.02632
400.070	198.930	-.00812	.07488	-.01788	.00406	-.00045	.00511	-1.54190	-.02765	-.02722	-.02635
	GRADIENT	.00000	.00000	.00000	.00000	.00000	.00000	.00000	.00000	.00000	.00000

AEDC VA422(IA17) ORB AND ET SEPARATING(ET DATA) (ATR001) (24 JUL 75)

REFERENCE DATA

SREF = 2690.0000 SQ.FT. XMRP = 1380.1000 IN. XT
LREF = 1290.3000 IN. YMRP = .0000 IN. YT
BREF = 1290.3000 IN. ZMRP = 416.4000 IN. ZT
SCALE = .0100

PARAMETRIC DATA

DLT-Y = .000 ALPHA = .000
BETA = .000 DLTALF = .000
DLTBTA = .000 MACH = 5.930
AILRON = .000 ELEVON = .000
GRID = 1.000

RUN NO. 56/ 0 GRADIENT INTERVAL = -5.00/ 5.00

DLT-X	DLT-Z	CN	CA	CLM	CY	CYN	CBL	XCP/L	YCP/L	CPB
.399	18.938	-.03737	.08807	.00680	.00383	.00011	.00018	.68174	.00000	-.02473
.623	99.508	-.03229	.08818	.00749	.00324	-.00082	.00008	.72030	.00000	-.02509
.480	200.550	-.02071	.08930	.01043	.00205	-.00073	.00007	.91013	.00000	-.02134
.523	302.250	-.00692	.08356	.00168	.00189	-.00035	.00003	.72782	.00000	-.02360
.545	400.920	-.00604	.08589	.00277	.00206	-.00038	.00004	.87861	.00000	-.02689
.588	500.080	-.00674	.08757	.00207	.00133	-.00038	.00004	.77296	.00000	-.02690
.583	600.080	-.00825	.08815	.00131	.00131	-.00014	.00004	.66931	.00000	-.02655
	GRADIENT	.00000	.00000	.00000	.00000	.00000	.00000	.00000	.00000	.00000

RUN NO. 57/ 0 GRADIENT INTERVAL = -5.00/ 5.00

DLT-X	DLT-Z	CN	CA	CLM	CY	CYN	CBL	XCP/L	YCP/L	CPB
200.460	23.109	-.04390	.08793	-.00229	.00482	-.00054	.00021	.52188	.63714	-.02735
200.470	99.517	-.03549	.08973	.00837	.00333	-.00065	.00004	.72317	.00000	-.02602
200.540	199.570	-.02467	.08919	.01157	.00334	-.00042	.00003	.88614	.00000	-.02128
200.610	298.550	-.00941	.08422	.00414	.00251	-.00030	.00002	.86579	.00000	-.02312
200.550	398.140	-.00481	.08532	.00316	.00179	-.00055	.00003	1.01620	.00000	-.02595
200.510	499.870	-.00638	.08761	.00250	.00039	-.00057	.00005	.83323	.00000	-.02700
200.650	600.240	-.00890	.08805	.00126	.00096	-.00044	.00004	.65744	.00000	-.02719
	GRADIENT	.00000	.00000	.00000	.00000	.00000	.00000	.00000	.00000	.00000

RUN NO. 58/ 0 GRADIENT INTERVAL = -5.00/ 5.00

DLT-X	DLT-Z	CN	CA	CLM	CY	CYN	CBL	XCP/L	YCP/L	CPB
400.550	22.447	-.04651	.08972	-.00733	.00698	-.00008	.00015	.44823	.56618	-.02911
400.470	101.480	-.04127	.08989	.00845	.00467	-.00018	.00002	.70137	.58469	-.02666
400.490	202.360	-.02646	.08775	.01068	.00171	-.00057	.00009	.84036	.00000	-.02147
400.560	301.060	-.01462	.08717	.00703	.00254	-.00029	.00002	.89450	.00000	-.02408
400.550	400.070	-.00560	.08523	.00286	.00198	-.00027	.00003	.91504	.00000	-.02488
400.590	499.990	-.00819	.08711	.00288	.00271	-.00002	.00001	.88133	.00000	-.02703
400.590	600.060	-.00852	.08809	.00125	.00143	-.00064	.00003	.66089	.00000	-.02733
	GRADIENT	.00000	.00000	.00000	.00000	.00000	.00000	.00000	.00000	.00000

ORIGINAL PAGE IS OF POOR QUALITY

AEDC VA422(IA17) ORB AND ET SEPARATING(ET DATA) (ATR002) (24 JUL 75)

REFERENCE DATA

SREF = 2690.0000 SQ.FT. XMRP = 1360.1000 IN. XT
LREF = 1290.3000 IN. YMRP = .0000 IN. YT
BREF = 1290.3000 IN. ZMRP = 416.4000 IN. ZT
SCALE = .0100

PARAMETRIC DATA

DLT-Y = .000 ALPHA = .000
BETA = .000 DLTALF = -5.000
DLTBTA = .000 MACH = 5.930
AILRON = .000 ELEVON = .000
GRID = 1.000

RUN NO. 62/ 0 GRADIENT INTERVAL = -5.00/ 5.00

DLT-X	DLT-Z	CN	CA	CLM	CY	CYN	CBL	XCP/L	YCP/L	CPB
.583	203.320	-.14253	.11284	.02139	.00535	.00184	.00029	.66321	.00000	-.01970
.583	301.840	-.08430	.09236	-.00462	.00337	-.00095	.00008	.52005	.00000	-.02121
.540	402.180	-.06602	.08608	-.01479	.00341	.00021	.00000	.40187	.00000	-.02529
.537	500.550	-.06793	.08917	-.01546	.00290	-.00016	.00000	.39935	.00000	-.02795
.612	599.980	-.06968	.08952	-.01648	.00310	.00011	.00002	.39310	.00000	-.02800
.040	799.500	-.07252	.08722	-.01796	.00200	-.00066	.00000	.35381	.00000	-.02817
	GRADIENT	.00000	.00000	.00000	.00000	.00000	.00000	.00000	.00000	.00000

RUN NO. 63/ 0 GRADIENT INTERVAL = -5.00/ 5.00

DLT-X	DLT-Z	CN	CA	CLM	CY	CYN	CBL	XCP/L	YCP/L	CPB
200.520	197.930	-.11762	.10072	.00537	.00400	-.00079	.00009	.59026	.00000	-.02126
200.520	298.660	-.08721	.09235	-.00337	.00305	-.00047	.00000	.53135	.00000	-.02177
200.480	397.580	-.07262	.08820	-.01059	.00279	-.00062	.00004	.45641	.00000	-.02519
200.450	498.940	-.06652	.08952	-.01438	.00237	-.00047	.00001	.40727	.00000	-.02693
200.600	600.130	-.06945	.09074	-.01627	.00191	-.00038	.00001	.39470	.00000	-.02803
200.510	800.290	-.07317	.08724	-.01813	.00215	-.00030	.00002	.38526	.00000	-.02811
	GRADIENT	.00000	.00000	.00000	.00000	.00000	.00000	.00000	.00000	.00000

AEDC VA422(IA17) ORB AND ET SEPARATING(ET DATA) (ATR003) (24 JUL 75)

REFERENCE DATA

SREF = 2690.0000 SQ.FT. XMRP = 1360.1000 IN. XT
LREF = 1290.3000 IN. YMRP = .0000 IN. YT
BREF = 1290.3000 IN. ZMRP = 416.4000 IN. ZT
SCALE = .0100

PARAMETRIC DATA

DLT-Y = .000 ALPHA = .000
BETA = .000 DLTALF = -10.000
DLTBTA = .000 MACH = 5.930
AILRON = .000 ELEVON = .000
GRID = 1.000

RUN NO. 64/ 0 GRADIENT INTERVAL = -5.00/ 5.00

DLT-X	DLT-Z	CN	CA	CLM	CY	CYN	CBL	XCP/L	YCP/L	CPB
.824	403.550	-.18294	.10564	-.01240	.00569	-.00072	.00007	.50517	.64720	-.02459
.471	[illegible]	-.14188	.09520	-.02841	.00350	.00037	.00001	.42828	.00000	-.02710
.552	600.150	-.13983	.09697	-.02943	.00457	.00049	.00000	.41111	.00000	-.02854
-.241	802.080	-.14564	.09574	-.03080	.00100	-.00006	.00002	.41060	.00000	-.02856
	GRADIENT	.00000	.00000	.00000	.00000	.00000	.00000	.00000	.00000	.00000

AEDC VA422(IA17) ORB AND ET SEPARATING(ET DATA) (ATR003) (24 JUL 75)

REFERENCE DATA

SREF = 2690.0000 SQ.FT. XMRP = 1360.1000 IN. XT
LREF = 1290.3000 IN. YMRP = .0000 IN. YT
BREF = 1290.3000 IN. ZMRP = 416.4000 IN. ZT
SCALE = .0100

PARAMETRIC DATA

DLT-Y = .000 ALPHA = .000
BETA = .000 DLTALF = -10.000
DLTBTA = .000 MACH = 5.930
AILRON = .000 ELEVON = .000
GRID = 1.000

RUN NO. 65/ 0 GRADIENT INTERVAL = -5.00/ 5.00

DLT-X	DLT-Z	CN	CA	CLM	CY	CYN	CBL	XCP/L	YCP/L	CPB
200.510	398.510	-.16809	.10643	-.00908	.00527	-.00058	.00001	.52059	.63517	-.02342
200.520	497.330	-.14862	.10002	-.02029	.00422	-.00034	.00008	.46294	.00000	-.02685
200.430	599.680	-.13978	.09711	-.02901	.00291	.00013	.00002	.41335	.00000	-.02729
200.520	800.290	-.14512	.09618	-.03057	.00102	-.00019	.00003	.41117	.00000	-.02849
	GRADIENT	.00000	.00000	.00000	.00000	.00000	.00000	.00000	.00000	.00000

RUN NO. 66/ 0 GRADIENT INTERVAL = -5.00/ 5.00

DLT-X	DLT-Z	CN	CA	CLM	CY	CYN	CBL	XCP/L	YCP/L	CPB
400.500	401.890	-.16874	.10541	-.01155	.00281	-.00044	.00002	.51053	.00000	-.02524
400.420	500.080	-.15521	.10531	-.01631	.00359	-.00094	.00010	.48494	.00000	-.02743
400.470	600.000	-.14049	.09658	-.02763	.00190	.00018	.00002	.42094	.00000	-.02723
400.570	800.030	-.14186	.09619	-.03032	.00250	.00021	.00000	.40902	.00000	-.02880
	GRADIENT	.00000	.00000	.00000	.00000	.00000	.00000	.00000	.00000	.00000

AEDC VA422(IA17) ORB AND ET SEPARATING(ET DATA) (ATR004) (24 JUL 75)

REFERENCE DATA

SREF = 2690.0000 SQ.FT. XMRP = 1360.1000 IN. XT
LREF = 1290.3000 IN. YMRP = .0000 IN. YT
BREF = 1290.3000 IN. ZMRP = 416.4000 IN. ZT
SCALE = .0100

PARAMETRIC DATA

DLT-Y = .000 ALPHA = .000
BETA = .000 DLTALF = -15.000
DLTBTA = .000 MACH = 5.930
AILRON = .000 ELEVON = .000
GRID = 1.000

RUN NO. 70/ 0 GRADIENT INTERVAL = -5.00/ 5.00

DLT-X	DLT-Z	CN	CA	CLM	CY	CYN	CBL	XCP/L	YCP/L	CPB
.442	500.500	-.26794	.12232	-.01078	.00555	-.00087	.00026	.53029	.00000	-.00750
.422	602.100	-.24012	.10943	-.03192	.00354	.00020	.00012	.46546	.00000	-.02594
.081	804.940	-.23402	.10878	-.03955	.00238	.00025	.00012	.44027	.00000	-.02789
	GRADIENT	.00000	.00000	.00000	.00000	.00000	.00000	.00000	.00000	.00000

AEDC VA422(IA17) ORB AND ET SEPARATING(ET DATA) (ATR004) (24 JUL 75)

REFERENCE DATA

SREF = 2690.0000 SQ.FT. XMRP = 1360.1000 IN. XT
LREF = 1290.3000 IN. YMRP = .0000 IN. YT
BREF = 1290.3000 IN. ZMRP = 416.4000 IN. ZT
SCALE = .0100

PARAMETRIC DATA

DLT-Y = .000 ALPHA = .000
BETA = .000 DLTALF = -15.000
DLTBTA = .000 MACH = 5.930
AILRON = .000 ELEVON = .000
GRID = 1.000

RUN NO. 71/ 0 GRADIENT INTERVAL = -5.00/ 5.00

DLT-X	DLT-Z	CN	CA	CLM	CY	CYN	CBL	XCP/L	YCP/L	CPB
200.430	500.280	-.27818	.12461	-.00843	.00528	-.00096	.00017	.53716	.00000	-.01451
200.480	597.050	-.24992	.11661	-.02454	.00404	-.00064	.00024	.48974	.00000	-.02601
200.530	800.250	-.23471	.10734	-.03944	.00281	-.00016	.00012	.44095	.00000	-.02780
	GRADIENT	.00000	.00000	.00000	.00000	.00000	.00000	.00000	.00000	.00000

RUN NO. 72/ 0 GRADIENT INTERVAL = -5.00/ 5.00

DLT-X	DLT-Z	CN	CA	CLM	CY	CYN	CBL	XCP/L	YCP/L	CPB
400.470	501.470	-.27011	.12179	-.01430	.00582	.00004	.00020	.52136	.00000	-.02452
400.360	600.000	-.25682	.11915	-.02122	.00603	-.00033	.00032	.50062	.59692	-.02681
400.400	800.330	-.23328	.10797	-.03920	.00237	.00025	.00013	.44093	.00000	-.02776
	GRADIENT	.00000	.00000	.00000	.00000	.00000	.00000	.00000	.00000	.00000

AEDC VA422(IA17) ORB AND ET SEPARATING(ET DATA) (ATR005) (24 JUL 75)

REFERENCE DATA

SREF = 2690.0000 SQ.FT. XMRP = 1360.1000 IN. XT
LREF = 1290.3000 IN. YMRP = .0000 IN. YT
BREF = 1290.3000 IN. ZMRP = 416.4000 IN. ZT
SCALE = .0100

PARAMETRIC DATA

DLT-Y = .000 ALPHA = .000
BETA = .000 DLTALF = -20.000
DLTBTA = .000 MACH = 5.930
AILRON = .000 ELEVON = .000
GRID = 1.000

RUN NO. 73/ 0 GRADIENT INTERVAL = -5.00/ 5.00

DLT-X	DLT-Z	CN	CA	CLM	CY	CYN	CBL	XCP/L	YCP/L	CPB
.458	802.100	-.34415	.12218	-.04183	.00544	-.00020	.00027	.47342	.00000	-.02511
.428	1000.200	-.34501	.12079	-.03901	.00660	.00006	.00031	.47935	.55240	-.02732
	GRADIENT	.00000	.00000	.00000	.00000	.00000	.00000	.00000	.00000	.00000

RUN NO. 74/ 0 GRADIENT INTERVAL = -5.00/ 5.00

DLT-X	DLT-Z	CN	CA	CLM	CY	CYN	CBL	XCP/L	YCP/L	CPB
200.420	798.700	-.34943	.12150	-.03842	.00486	-.00028	.00026	.48153	.00000	-.02484
200.460	1000.200	-.34575	.12259	-.03817	.00591	-.00039	.00031	.48120	.00000	-.02727
	GRADIENT	.00000	.00000	.00000	.00000	.00000	.00000	.00000	.00000	.00000

AEDC VA422(IA17) ORB AND ET SEPARATING(ET DATA) (ATR005) (24 JUL 75)

REFERENCE DATA

SREF = 2690.0000 SQ.FT. XMRP = 1360.1000 IN. XT
LREF = 1290.3000 IN. YMRP = .0000 IN. YT
BREF = 1290.3000 IN. ZMRP = 416.4000 IN. ZT
SCALE = .0100

PARAMETRIC DATA

DLT-Y = .000 ALPHA = .000
BETA = .000 DLTALF = -20.000
DLTBTA = .000 MACH = 5.930
AILRON = .000 ELEVON = .000
GRID = 1.000

RUN NO. 75/ 0 GRADIENT INTERVAL = -5.00/ 5.00

DLT-X	DLT-Z	CN	CA	CLM	CY	CYN	CBL	XCP/L	YCP/L	CPB
400.420	800.440	-.35874	.12798	-.03214	.00485	-.00056	.00027	.49575	.00000	-.02556
400.390	1000.200	-.34439	.12251	-.03825	.00586	-.00038	.00028	.48074	.00000	-.02732
	GRADIENT	.00000	.00000	.00000	.00000	.00000	.00000	.00000	.00000	.00000

AEDC VA422(IA17) ORB AND ET SEPARATING(ET DATA) (ATR006) (24 JUL 75)

REFERENCE DATA

SREF = 2690.0000 SQ.FT. XMRP = 1360.1000 IN. XT
LREF = 1290.3000 IN. YMRP = .0000 IN. YT
BREF = 1290.3000 IN. ZMRP = 416.4000 IN. ZT
SCALE = .0100

PARAMETRIC DATA

DLT-Y = .000 ALPHA = .000
BETA = .000 DLTALF = -20.000
DLTBTA = .000 MACH = 5.930
AILRON = .000 ELEVON = .000
GRID = 26.000

RUN NO. 380/ 0 GRADIENT INTERVAL = -5.00/ 5.00

DLT-X	DLT-Z	CN	CA	CLM	CY	CYN	CBL	XCP/L	YCP/L	CPB
.538	801.940	-.34253	.12684	-.04172	.00668	.00009	.00030	.47325	.54926	.00000
.515	900.480	-.34311	.12484	-.04154	.00670	.00027	.00036	.47376	.52967	.00000
.481	1000.300	-.34432	.12492	-.03881	.00760	.00028	.00037	.47959	.53220	.00000
	GRADIENT	.00000	.00000	.00000	.00000	.00000	.00000	.00000	.00000	.00000

ORIGINAL PAGE IS OF POOR QUALITY

AEDC VA422(IA17) ORB AND ET SEPARATING(ET DATA) (ATR007) (24 JUL 75)

REFERENCE DATA

SREF = 2690.0000 SQ.FT. XMRP = 1360.1000 IN. XT
LREF = 1290.3000 IN. YMRP = .0000 IN. YT
BREF = 1290.3000 IN. ZMRP = 416.4000 IN. ZT
SCALE = .0100

PARAMETRIC DATA

DLT-Y = .000 ALPHA = .000
BETA = .000 DLTALF = -20.000
DLTBTA = .000 MACH = 5.930
AILRON = .000 ELEVON = .000
GRID = 26.000

RUN NO. 381/ 0 GRADIENT INTERVAL = -5.00/ 5.00

DLT-X	DLT-Z	CN	CA	CLM	CY	CYN	CBL	XCP/L	YCP/L	CPB
.447	801.930	-.34311	.12882	-.04162	.00700	.00008	.00033	.47389	.55191	.00000
.483	900.560	-.34313	.12482	-.04148	.00640	.00026	.00037	.47389	.00000	.00000
.461	1000.200	-.34423	.12544	-.03885	.00659	.00019	.00037	.47949	.53791	.00000
	GRADIENT	.00000	.00000	.00000	.00000	.00000	.00000	.00000	.00000	.00000

RUN NO. 372/ 0 GRADIENT INTERVAL = -5.00/ 5.00

DLT-X	DLT-Z	CN	CA	CLM	CY	CYN	CBL	XCP/L	YCP/L	CPB
200.480	751.020	-.36003	.13383	-.03072	.00730	-.00004	.00028	.49872	.56198	.00000
200.450	800.370	-.34867	.12660	-.03860	.00649	.00023	.00034	.48099	.00000	.00000
200.420	900.480	-.34262	.12603	-.04091	.00672	.00022	.00037	.47492	.53568	.00000
200.400	1000.200	-.34457	.12671	-.03808	.00673	.00015	.00038	.48113	.54327	.00000
	GRADIENT	.00000	.00000	.00000	.00000	.00000	.00000	.00000	.00000	.00000

RUN NO. 373/ 0 GRADIENT INTERVAL = -5.00/ 5.00

DLT-X	DLT-Z	CN	CA	CLM	CY	CYN	CBL	XCP/L	YCP/L	CPB
400.400	749.510	-.36979	.14105	-.02428	.00771	-.00068	.00037	.51247	.61808	.00000
400.410	800.460	-.35858	.13180	-.03211	.00770	.00004	.00030	.49577	.55508	.00000
400.430	900.400	-.34372	.12688	-.03995	.00803	.00038	.00036	.47715	.52483	.00000
400.370	1000.200	-.34379	.12744	-.03802	.00756	.00008	.00036	.48108	.55115	.00000
	GRADIENT	.00000	.00000	.00000	.00000	.00000	.00000	.00000	.00000	.00000

AEDC VA422(IA17) ORB AND ET SEPARATING(ET DATA) (ATR008) (24 JUL 75)

REFERENCE DATA

SREF = 2690.0000 SQ.FT. XMRP = 1360.1000 IN. XT
LREF = 1290.3000 IN. YMRP = .0000 IN. YT
BREF = 1290.3000 IN. ZMRP = 416.4000 IN. ZT
SCALE = .0100

PARAMETRIC DATA

DLT-Y = .000 ALPHA = .000
BETA = 3.000 DLTALF = .000
DLTBTA = .000 MACH = 5.930
AILRON = .000 ELEVON = .000
GRID = 3.000

RUN NO. 149/ 0 GRADIENT INTERVAL = -5.00/ 5.00

DLT-X	DLT-Z	CN	CA	CLM	CY	CYN	CBL	XCP/L	YCP/L	CPB
.568	18.747	-.04056	.09421	.00683	-.03720	-.01010	.00049	.67597	.36865	.00000
.604	99.536	-.03645	.09394	.00736	-.03500	-.01031	.00044	.69939	.35253	.00000
.594	200.540	-.02558	.09709	.01143	-.03484	-.01266	.00019	.87056	.30454	.00000
.638	302.100	-.00898	.09004	.00132	-.03452	-.01167	.00032	.66107	.32214	.00000
.627	401.050	-.00906	.09091	.00196	-.03560	-.01220	.00034	.70968	.31888	.00000
.648	500.020	-.00926	.09213	.00196	-.03670	-.01306	.00037	.70630	.30963	.00000
.670	600.030	-.01006	.09225	.00115	-.03661	-.01352	.00036	.63787	.30035	.00000
	GRADIENT	.00000	.00000	.00000	.00000	.00000	.00000	.00000	.00000	.00000

RUN NO. 112/ 0 GRADIENT INTERVAL = -5.00/ 5.00

DLT-X	DLT-Z	CN	CA	CLM	CY	CYN	CBL	XCP/L	YCP/L	CPB
200.630	23.164	-.04768	.09574	-.00144	-.03649	-.00964	.00059	.53722	.37371	.00000
200.620	99.708	-.03764	.09531	.00833	-.03676	-.01007	.00045	.71299	.36687	.00000
200.540	199.500	-.02631	.09680	.01250	-.03250	-.01219	.00029	.89029	.29635	.00000
200.620	298.610	-.01114	.09098	.00408	-.03318	-.01192	.00027	.81406	.30743	.00000
200.580	398.160	-.00584	.09058	.00255	-.03508	-.01225	.00034	.86350	.31431	.00000
200.610	499.620	-.00775	.09149	.00233	-.03634	-.01308	.00035	.76804	.30677	.00000
200.710	600.220	-.00881	.09204	.00159	-.03614	-.01349	.00036	.68462	.29763	.00000
	GRADIENT	.00000	.00000	.00000	.00000	.00000	.00000	.00000	.00000	.00000

AEDC VA422(IA17) ORB AND ET SEPARATING(ET DATA) (ATR009) (24 JUL 75)

REFERENCE DATA

SREF = 2690.0000 SQ.FT. XMRP = 1360.1000 IN. XT
LREF = 1290.3000 IN. YMRP = .0000 IN. YT
BREF = 1290.3000 IN. ZMRP = 416.4000 IN. ZT
SCALE = .0100

PARAMETRIC DATA

DLT-Y = .000 ALPHA = .000
BETA = 3.000 DLTALF = -5.000
DLTBTA = .000 MACH = 5.930
AILRON = .000 ELEVON = .000
GRID = 3.000

RUN NO. 115/ 0 GRADIENT INTERVAL = -5.00/ 5.00

DLT-X	DLT-Z	CN	CA	CLM	CY	CYN	CBL	XCP/L	YCP/L	CPB
.627	202.150	-.12290	.11101	.01007	-.03543	-.00960	.00029	.61560	.36911	.00000
.593	301.940	-.08836	.10281	-.00262	-.03209	-.01146	.00025	.53761	.30876	.00000
.540	402.260	-.06786	.09420	-.01377	-.03346	-.01097	.00029	.41663	.32926	.00000
.715	500.510	-.06849	.09588	-.01415	-.03703	-.01211	.00034	.41407	.32991	.00000
.665	599.990	-.07015	.09627	-.01462	-.03560	-.01221	.00033	.41278	.31874	.00000
.690	750.080	-.07196	.09605	-.01539	-.03586	-.01242	.00033	.40887	.31637	.00000
.085	799.260	-.07108	.09561	-.01531	-.03509	-.01198	.00031	.40788	.31986	.00000
	GRADIENT	.00000	.00000	.00000	.00000	.00000	.00000	.00000	.00000	.00000

RUN NO. 116/ 0 GRADIENT INTERVAL = -5.00/ 5.00

DLT-X	DLT-Z	CN	CA	CLM	CY	CYN	CBL	XCP/L	YCP/L	CPB
200.510	199.160	-.12217	.10872	.00781	-.03589	-.00908	.00032	.60185	.38160	.00000
200.490	298.670	-.09257	.10141	-.00132	-.03233	-.01060	.00025	.54836	.32924	.00000
200.460	397.450	-.07396	.09676	-.00950	-.03344	-.01147	.00025	.46856	.31873	.00000
200.600	498.780	-.06759	.09528	-.01398	-.03652	-.01224	.00034	.41384	.32423	.00000
200.480	600.060	-.06902	.09706	-.01432	-.03591	-.01238	.00033	.41343	.31742	.00000
200.550	750.160	-.07129	.09569	-.01557	-.03515	-.01216	.00031	.40575	.31665	.00000
200.610	800.120	-.07189	.09498	-.01566	-.03410	-.01201	.00030	.40613	.31238	.00000
	GRADIENT	.00000	.00000	.00000	.00000	.00000	.00000	.00000	.00000	.00000

DATE 25 JUL 75 TABULATED SOURCE DATA - IA17A

AEDC VA422(IA17) ORB AND ET SEPARATING(ET DATA) (ATR010) (24 JUL 75)

REFERENCE DATA

SREF = 2690.0000 SQ.FT. XMRP = 1360.1000 IN. XT
LREF = 1290.3000 IN. YMRP = .0000 IN. YT
BREF = 1290.3000 IN. ZMRP = 416.4000 IN. ZT
SCALE = .0100

PARAMETRIC DATA

DLT-Y = .000 ALPHA = .000
BETA = 3.000 DLTALF = -10.000
DLTBTA = .000 MACH = 5.930
AILRON = .000 ELEVON = .000
GRID = 3.000

RUN NO. 117/ 0 GRADIENT INTERVAL = -5.00/ 5.00

DLT-X	DLT-Z	CN	CA	CLM	CY	CYN	CBL	XCP/L	YCP/L	CPB
.557	403.760	-.16629	.11222	-.01164	-.03462	-.01038	.00035	.50944	.34881	.00000
.644	501.940	-.14433	.10318	-.02478	-.03696	-.01045	.00030	.43839	.36078	.00000
.643	600.220	-.14111	.10351	-.02765	-.03853	-.01073	.00034	.42144	.36369	.00000
.538	750.070	-.14466	.10349	-.02790	-.03891	-.01096	.00036	.42357	.36152	.00000
-.124	801.870	-.14641	.10311	-.02769	-.03805	-.01080	.00034	.42623	.35996	.00000
	GRADIENT	.00000	.00000	.00000	.00000	.00000	.00000	.00000	.00000	.00000

RUN NO. 118/ 0 GRADIENT INTERVAL = -5.00/ 5.00

DLT-X	DLT-Z	CN	CA	CLM	CY	CYN	CBL	XCP/L	YCP/L	CPB
200.450	398.540	-.16983	.10944	-.00990	-.03667	-.00919	.00025	.51760	.38333	.00000
200.510	497.210	-.15221	.10795	-.01851	-.03760	-.01063	.00032	.47338	.36082	.00000
200.510	599.540	-.14191	.10224	-.02743	-.03957	-.01109	.00036	.42331	.36254	.00000
200.550	750.130	-.14423	.10293	-.02816	-.03879	-.01110	.00034	.42194	.35849	.00000
200.550	800.220	-.14446	.10278	-.02805	-.03734	-.01078	.00032	.42266	.35671	.00000
	GRADIENT	.00000	.00000	.00000	.00000	.00000	.00000	.00000	.00000	.00000

RUN NO. 119/ 0 GRADIENT INTERVAL = -5.00/ 5.00

DLT-X	DLT-Z	CN	CA	CLM	CY	CYN	CBL	XCP/L	YCP/L	CPB
400.470	402.100	-.17399	.11191	-.01016	-.03777	-.00896	.00036	.51753	.39267	.00000
400.460	500.020	-.15899	.11124	-.01509	-.03566	-.01081	.00036	.49203	.34660	.00000
400.490	600.130	-.14299	.10238	-.02624	-.03883	-.01110	.00031	.43015	.35869	.00000
400.470	750.080	-.14300	.10245	-.02831	-.03967	-.01136	.00033	.42004	.35821	.00000
400.530	800.070	-.14340	.10233	-.02818	-.03810	-.01096	.00033	.42107	.35741	.00000
	GRADIENT	.00000	.00000	.00000	.00000	.00000	.00000	.00000	.00000	.00000

ORIGINAL PAGE IS OF POOR QUALITY

AEDC VA422(IA17) ORB AND ET SEPARATING(ET DATA) (ATR011) (24 JUL 75)

REFERENCE DATA

SREF = 2690.0000 SQ.FT. XMRP = 1360.1000 IN. XT
LREF = 1290.3000 IN. YMRP = .0000 IN. YT
BREF = 1290.3000 IN. ZMRP = 416.4000 IN. ZT
SCALE = .0100

PARAMETRIC DATA

DLT-Y = .000 ALPHA = .000
BETA = 3.000 DLTALF = -15.000
DLTBTA = .000 MACH = 5.930
AILRON = .000 ELEVON = .000
GRID = 3.000

RUN NO. 123/ 0 GRADIENT INTERVAL = -5.00/ 5.00

DLT-X	DLT-Z	CN	CA	CLM	CY	CYN	CBL	XCP/L	YCP/L	CPB
.547	500.410	-.26919	.12436	-.01121	-.04055	-.00978	.00022	.52924	.38985	.00000
.516	602.170	-.24169	.11541	-.02986	-.04182	-.01010	.00028	.47203	.38963	.00000
.564	750.320	-.23480	.11405	-.03617	-.04325	-.00933	.00034	.45071	.40754	.00000
.201	804.780	-.23743	.11387	-.03597	-.04337	-.00921	.00036	.45250	.41007	.00000
	GRADIENT	.00000	.00000	.00000	.00000	.00000	.00000	.00000	.00000	.00000

RUN NO. 124/ 0 GRADIENT INTERVAL = -5.00/ 5.00

DLT-X	DLT-Z	CN	CA	CLM	CY	CYN	CBL	XCP/L	YCP/L	CPB
200.490	500.260	-.27911	.12683	-.00826	-.04194	-.00911	.00028	.53767	.40667	.00000
200.580	597.120	-.25302	.12075	-.02361	-.04277	-.01032	.00033	.49314	.38973	.00000
200.600	750.050	-.23618	.11322	-.03629	-.04461	-.00967	.00035	.45099	.40685	.00000
200.480	800.270	-.23613	.11349	-.03608	-.04505	-.00949	.00034	.45161	.41122	.00000
	GRADIENT	.00000	.00000	.00000	.00000	.00000	.00000	.00000	.00000	.00000

RUN NO. 125/ 0 GRADIENT INTERVAL = -5.00/ 5.00

DLT-X	DLT-Z	CN	CA	CLM	CY	CYN	CBL	XCP/L	YCP/L	CPB
400.480	501.640	-.27820	.12797	-.01124	-.04422	-.00795	.00036	.53010	.43270	.00000
400.340	600.130	-.25983	.12526	-.01896	-.04263	-.01050	.00039	.50737	.38626	.00000
400.440	750.350	-.23639	.11289	-.03626	-.04548	-.00995	.00033	.45116	.40546	.00000
400.430	800.380	-.23561	.11255	-.03635	-.04520	-.00965	.00034	.45056	.40915	.00000
	GRADIENT	.00000	.00000	.00000	.00000	.00000	.00000	.00000	.00000	.00000

DATE 25 JUL 75 TABULATED SOURCE DATA - IA17A

AEDC VA422(IA17) ORB AND ET SEPARATING(ET DATA) (ATR012) (24 JUL 75)

REFERENCE DATA

SREF = 2690.0000 SQ.FT. XMRP = 1360.1000 IN. XT
LREF = 1290.3000 IN. YMRP = .0000 IN. YT
BREF = 1290.3000 IN. ZMRP = 416.4000 IN. ZT
SCALE = .0100

PARAMETRIC DATA

DLT-Y = .000 ALPHA = .000
BETA = 3.000 DLTALF = .000
DLTBTA = .000 MACH = 5.930
AILRON = .000 ELEVON = .000
GRID = 3.000

RUN NO. 111/ 0 GRADIENT INTERVAL = -5.00/ 5.00

DLT-X	DLT-Z	CN	CA	CLM	CY	CYN	CBL	XCP/L	YCP/L	CPB
.689	18.867	-.03851	.09446	.00713	-.03672	-.01004	.00049	.68778	.36743	.00000
.634	99.512	-.03419	.09436	.00777	-.03444	-.01020	.00043	.71714	.35143	.00000
.627	200.870	-.02348	.09819	.01188	-.03430	-.01256	.00019	.91206	.30260	.00000
.696	302.210	-.00704	.09012	.00165	-.03325	-.01133	.00032	.72201	.32031	.00000
.605	401.000	-.00677	.09119	.00222	-.03503	-.01198	.00033	.78725	.31942	.00000
.646	500.170	-.00790	.09221	.00225	-.03547	-.01265	.00034	.75713	.30918	.00000
.695	600.150	-.00940	.09208	.00150	-.03614	-.01320	.00034	.66956	.30311	.00000
	GRADIENT	.00000	.00000	.00000	.00000	.00000	.00000	.00000	.00000	.00000

ORIGINAL PAGE IS OF POOR QUALITY

AEDC VA422(IA17) ORB AND ET SEPARATING(ET DATA) (ATR013) (24 JUL 75)

REFERENCE DATA

SREF = 2690.0000 SQ.FT. XMRP = 1360.1000 IN. XT
LREF = 1290.3000 IN. YMRP = .0000 IN. YT
BREF = 1290.3000 IN. ZMRP = 416.4000 IN. ZT
SCALE = .0100

PARAMETRIC DATA

DLT-Y = .000 ALPHA = .000
BETA = 3.000 DLTALF = .000
DLTBTA = .000 MACH = 5.930
AILRON = .000 ELEVON = .000
GRID = 3.000

RUN NO. 130/ 0 GRADIENT INTERVAL = -5.00/ 5.00

DLT-X	DLT-Z	CN	CA	CLM	CY	CYN	CBL	XCP/L	YCP/L	CPB
.584	801.870	-.34831	.12765	-.03828	-.05141	-.00828	.00029	.48112	.44611	.00000
.548	900.380	-.34778	.12837	-.03724	-.04928	-.00743	.00030	.48354	.45304	.00000
.585	1000.300	-.34875	.12778	-.03603	-.04782	-.00671	.00027	.48617	.46027	.00000
	GRADIENT	.00000	.00000	.00000	.00000	.00000	.00000	.00000	.00000	.00000

RUN NO. 126/ 0 GRADIENT INTERVAL = -5.00/ 5.00

DLT-X	DLT-Z	CN	CA	CLM	CY	CYN	CBL	XCP/L	YCP/L	CPB
200.490	750.990	-.38129	.13343	-.02852	-.04935	-.00886	.00020	.50318	.43292	.00000
200.550	800.390	-.35154	.12556	-.03522	-.05026	-.00812	.00027	.48835	.44551	.00000
200.610	900.410	-.34550	.12834	-.03814	-.04909	-.00742	.00024	.48122	.45279	.00000
200.480	1000.300	-.34615	.12680	-.03683	-.04719	-.00668	.00024	.48401	.45940	.00000
	GRADIENT	.00000	.00000	.00000	.00000	.00000	.00000	.00000	.00000	.00000

AEDC VA422(IA17) ORB AND ET SEPARATING(ET DATA) (ATR013) (24 JUL 75)

REFERENCE DATA

SREF = 2690.0000 SQ.FT. XMRP = 1360.1000 IN. XT
LREF = 1290.3000 IN. YMRP = .0000 IN. YT
BREF = 1290.3000 IN. ZMRP = 416.4000 IN. ZT
SCALE = .0100

PARAMETRIC DATA

DLT-Y = .000 ALPHA = .000
BETA = 3.000 DLTALF = .000
DLTBTA = .000 MACH = 5.930
AILRON = .000 ELEVON = .000
GRID = 3.000

RUN NO. 127/ 0 GRADIENT INTERVAL = -5.00/ 5.00

DLT-X	DLT-Z	CN	CA	CLM	CY	CYN	CBL	XCP/L	YCP/L	CPB
400.530	749.570	-.37085	.13720	-.02347	-.05075	-.00917	.00032	.51411	.43211	.00000
400.450	800.410	-.36071	.13105	-.02963	-.05137	-.00876	.00022	.50095	.43921	.00000
400.550	900.430	-.34543	.12584	-.03824	-.05016	-.00771	.00025	.48099	.45090	.00000
400.540	1000.300	-.34658	.12634	-.03733	-.04843	-.00702	.00030	.48308	.45704	.00000
	GRADIENT	.00000	.00000	.00000	.00000	.00000	.00000	.00000	.00000	.00000

AEDC VA422(IA17) ORB AND ET SEPARATING(ET DATA) (ATR014) (24 JUL 75)

REFERENCE DATA

SREF = 2690.0000 SQ.FT. XMRP = 1360.1000 IN. XT
LREF = 1290.3000 IN. YMRP = .0000 IN. YT
BREF = 1290.3000 IN. ZMRP = 416.4000 IN. ZT
SCALE = .0100

PARAMETRIC DATA

DLT-Y = .000 ALPHA = 5.000
BETA = .000 DLTALF = .000
DLTBTA = .000 MACH = 5.930
AILRON = .000 ELEVON = .000
GRID = 5.000

RUN NO. 199/ 0 GRADIENT INTERVAL = -5.00/ 5.00

DLT-X	DLT-Z	CN	CA	CLM	CY	CYN	CBL	XCP/L	YCP/L	CPB
.505	19.300	.01614	.09050	.02794	.00374	.00012	.00011	-.65083	.00000	.00000
.554	98.091	.02312	.09213	.02855	.00471	-.00018	.00003	-.30441	.58509	.00000
.569	199.070	.03603	.09095	.02955	.00316	-.00086	.00007	-.01466	.00000	.00000
.549	300.220	.05485	.08448	.01943	.00189	-.00019	.00004	.31093	.00000	.00000
.608	402.090	.05519	.08510	.01929	.00208	-.00023	.00003	.31420	.00000	.00000
.546	501.120	.05577	.08565	.01912	.00182	-.00012	.00004	.31889	.00000	.00000
.724	598.410	.05577	.08631	.01997	.00181	-.00016	.00004	.30816	.00000	.00000
	GRADIENT	.00000	.00000	.00000	.00000	.00000	.00000	.00000	.00000	.00000

RUN NO. 200/ 0 GRADIENT INTERVAL = -5.00/ 5.00

DLT-X	DLT-Z	CN	CA	CLM	CY	CYN	CBL	XCP/L	YCP/L	CPB
200.600	22.544	.00851	.09217	.01813	.00504	-.00003	.00021	-.92998	.56272	.00000
200.590	100.760	.01583	.09209	.02736	.00444	.00002	.00008	-.64890	.54498	.00000
200.570	200.350	.03120	.09283	.03199	.00364	-.00096	.00010	-.15790	.00000	.00000
200.530	300.330	.05455	.08402	.01954	.00244	-.00015	.00004	.30810	.00000	.00000
200.680	398.190	.05540	.08621	.01952	.00192	-.00028	.00005	.31222	.00000	.00000
200.620	498.430	.05539	.08533	.01939	.00225	-.00018	.00005	.31373	.00000	.00000
200.680	599.720	.05610	.08679	.02045	.00359	.00023	.00002	.30364	.00000	.00000
	GRADIENT	.00000	.00000	.00000	.00000	.00000	.00000	.00000	.00000	.00000

AEDC VA422(IA17) ORB AND ET SEPARATING(ET DATA) (ATR014) (24 JUL 75)

REFERENCE DATA

SREF = 2690.0000 SQ.FT. XMRP = 1360.1000 IN. XT
LREF = 1290.3000 IN. YMRP = .0000 IN. YT
BREF = 1290.3000 IN. ZMRP = 416.4000 IN. ZT
SCALE = .0100

PARAMETRIC DATA

DLT-Y = .000 ALPHA = 5.000
BETA = .000 DLTALF = .000
DLTBTA = .000 MACH = 5.930
AILRON = .000 ELEVON = .000
GRID = 5.000

RUN NO. 201/ 0 GRADIENT INTERVAL = -5.00/ 5.00

DLT-X	DLT-Z	CN	CA	CLM	CY	CYN	CBL	XCP/L	YCP/L	CPB
400.530	21.897	.00712	.09321	.00959	.00447	.00009	.00017	-.38307	.54504	.00000
400.560	100.140	.00990	.09247	.02817	.00462	-.00005	.00011	-1.42930	.56603	.00000
400.550	201.360	.02341	.09617	.03592	.00508	-.00114	.00009	-.51371	.71458	.00000
400.490	302.120	.05213	.08395	.02024	.00287	-.00000	.00003	.28712	.00000	.00000
400.510	400.560	.05511	.08501	.01945	.00270	-.00001	.00003	.31180	.00000	.00000
400.650	500.060	.05497	.08530	.01968	.00253	-.00001	.00004	.30824	.00000	.00000
400.640	600.040	.05485	.08630	.02080	.00280	.00008	.00003	.29336	.00000	.00000
	GRADIENT	.00000	.00000	.00000	.00000	.00000	.00000	.00000	.00000	.00000

AEDC VA422(IA17) ORB AND ET SEPARATING(ET DATA) (ATR015) (24 JUL 75)

REFERENCE DATA

SREF = 2690.0000 SQ.FT. XMRP = 1360.1000 IN. XT
LREF = 1290.3000 IN. YMRP = .0000 IN. YT
BREF = 1290.3000 IN. ZMRP = 416.4000 IN. ZT
SCALE = .0100

PARAMETRIC DATA

DLT-Y = .000 ALPHA = 5.000
BETA = .000 DLTALF = -5.000
DLTBTA = .000 MACH = 5.930
AILRON = .000 ELEVON = .000
GRID = 5.000

RUN NO. 205/ 0 GRADIENT INTERVAL = -5.00/ 5.00

DLT-X	DLT-Z	CN	CA	CLM	CY	CYN	CBL	XCP/L	YCP/L	CPB
.598	201.330	-.07383	.10603	.03118	.00607	-.00108	.00015	.85417	.68040	.00000
.500	300.070	-.02515	.09184	.01257	.00422	.00004	.00009	.90765	.00000	.00000
.481	401.570	-.00730	.08692	.00207	.00309	.00024	.00004	.75654	.00000	.00000
.526	502.110	-.00755	.08778	.00173	.00316	.00013	.00005	.71876	.00000	.00000
.517	600.510	-.00690	.08863	.00187	.00303	.00031	.00005	.74757	.00000	.00000
.586	749.980	-.00623	.08992	.00274	.00363	.00046	.00004	.86624	.00000	.00000
-.272	900.730	-.00756	.09088	.00240	.00282	.00028	.00004	.78007	.00000	.00000
	GRADIENT	.00000	.00000	.00000	.00000	.00000	.00000	.00000	.00000	.00000

AEDC VA422(IA17) ORB AND ET SEPARATING(ET DATA) (ATR015) (24 JUL 75)

REFERENCE DATA

SREF = 2690.0000 SQ.FT. XMRP = 1360.1000 IN. XT
LREF = 1290.3000 IN. YMRP = .0000 IN. YT
BREF = 1290.3000 IN. ZMRP = 416.4000 IN. ZT
SCALE = .0100

PARAMETRIC DATA

DLT-Y = .000 ALPHA = 5.000
BETA = .000 DLTALF = -5.000
DLTBTA = .000 MACH = 5.930
AILRON = .000 ELEVON = .000
GRID = 5.000

RUN NO. 206/ 0 GRADIENT INTERVAL = -5.00/ 5.00

DLT-X	DLT-Z	CN	CA	CLM	CY	CYN	CBL	XCP/L	YCP/L	CPB
200.590	199.280	-.06245	.10144	.02371	.00650	-.00062	.00014	.82357	.62534	.00000
200.490	299.940	-.03582	.09473	.01866	.00444	-.00054	.00008	.92233	.64393	.00000
200.590	399.370	-.00735	.08606	.00239	.00282	-.00002	.00005	.78506	.00000	.00000
200.570	497.480	-.00691	.08742	.00199	.00303	.00020	.00004	.75935	.00000	.00000
200.590	599.050	-.00631	.08803	.00226	.00261	.00003	.00005	.80859	.00000	.00000
200.660	750.020	-.00644	.09082	.00301	.00278	.00015	.00005	.80519	.00000	.00000
200.720	800.190	-.00758	.09172	.00231	.00265	.00018	.00005	.77164	.00000	.00000
	GRADIENT	.00000	.00000	.00000	.00000	.00000	.00000	.00000	.00000	.00000

AEDC VA422(IA17) ORB AND ET SEPARATING(ET DATA) (ATR016) (24 JUL 75)

REFERENCE DATA

SREF = 2690.0000 SQ.FT. XMRP = 1360.1000 IN. XT
LREF = 1290.3000 IN. YMRP = .0000 IN. YT
BREF = 1290.3000 IN. ZMRP = 416.4000 IN. ZT
SCALE = .0100

PARAMETRIC DATA

DLT-Y = .000 ALPHA = 5.000
BETA = .000 DLTALF = -10.000
DLTBTA = .000 MACH = 5.930
AILRON = .000 ELEVON = .000
GRID = 5.000

RUN NO. 207/ 0 GRADIENT INTERVAL = -5.00/ 5.00

DLT-X	DLT-Z	CN	CA	CLM	CY	CYN	CBL	XCP/L	YCP/L	CPB
.443	401.160	-.09159	.09754	.00035	.00648	.00012	.00007	.56099	.54591	.00000
.523	502.730	-.06556	.08931	-.01523	.00440	.00064	.00003	.39602	.00000	.00000
.527	601.890	-.06786	.09026	-.01554	.00456	.00063	.00003	.39833	.00000	.00000
.472	749.950	-.06505	.09260	-.01505	.00524	.00084	.00002	.39668	.44601	.00000
-.729	803.170	-.06639	.09293	-.01565	.00387	.00053	.00004	.39362	.00000	.00000
	GRADIENT	.00000	.00000	.00000	.00000	.00000	.00000	.00000	.00000	.00000

RUN NO. 208/ 0 GRADIENT INTERVAL = -5.00/ 5.00

DLT-X	DLT-Z	CN	CA	CLM	CY	CYN	CBL	XCP/L	YCP/L	CPB
200.480	399.930	-.10415	.10077	.00738	.00628	-.00046	.00000	.60774	.60948	.00000
200.450	497.860	-.06600	.08880	-.01441	.00389	.00042	.00003	.40579	.00000	.00000
200.550	597.870	-.06381	.08987	-.01518	.00505	.00070	.00003	.39211	.46115	.00000
200.630	749.840	-.06481	.09268	-.01462	.00494	.00086	.00003	.40070	.43744	.00000
200.820	800.160	-.06698	.09361	-.01531	.00488	.00066	.00003	.39971	.46378	.00000
	GRADIENT	.00000	.00000	.00000	.00000	.00000	.00000	.00000	.00000	.00000

AEDC VA422(IA17) ORB AND ET SEPARATING(ET DATA) (ATR016) (24 JUL 75)

REFERENCE DATA

SREF = 2690.0000 SQ.FT. XMRP = 1360.1000 IN. XT
LREF = 1290.3000 IN. YMRP = .0000 IN. YT
BREF = 1290.3000 IN. ZMRP = 416.4000 IN. ZT
SCALE = .0100

PARAMETRIC DATA

DLT-Y = .000 ALPHA = 5.000
BETA = .000 DLTALF = -10.000
DLTBTA = .000 MACH = 5.930
AILRON = .000 ELEVON = .000
GRID = 5.000

RUN NO. 209/ 0 GRADIENT INTERVAL = -5.00/ 5.00

DLT-X	DLT-Z	CN	CA	CLM	CY	CYN	CBL	XCP/L	YCP/L	CPB
400.520	402.610	-.11547	.10387	.01221	.00563	-.00039	.00004	.63224	.60724	.00000
400.620	501.040	-.07069	.08959	-.01254	.00410	.00040	.00004	.43444	.00000	.00000
400.530	600.030	-.06669	.09028	-.01494	.00386	.00049	.00003	.40182	.00000	.00000
400.570	750.130	-.06679	.09270	-.01461	.00419	.00046	.00002	.40553	.00000	.00000
400.430	800.080	-.06669	.09350	-.01480	.00395	.00061	.00004	.40327	.00000	.00000
	GRADIENT	.00000	.00000	.00000	.00000	.00000	.00000	.00000	.00000	.00000

AEDC VA422(IA17) ORB AND ET SEPARATING(ET DATA) (ATR017) (24 JUL 75)

REFERENCE DATA

SREF = 2690.0000 SQ.FT. XMRP = 1360.1000 IN. XT
LREF = 1290.3000 IN. YMRP = .0000 IN. YT
BREF = 1290.3000 IN. ZMRP = 416.4000 IN. ZT
SCALE = .0100

PARAMETRIC DATA

DLT-Y = .000 ALPHA = 5.000
BETA = .000 DLTALF = -15.000
DLTBTA = .000 MACH = 5.930
AILRON = .000 ELEVON = .000
GRID = 5.000

RUN NO. 213/ 0 GRADIENT INTERVAL = -5.00/ 5.00

DLT-X	DLT-Z	CN	CA	CLM	CY	CYN	CBL	XCP/L	YCP/L	CPB
.497	504.090	-.17720	.10976	-.00125	.00583	.00001	.00005	.55341	.55756	.00000
.513	604.700	-.13635	.09653	-.02777	.00489	.00089	.00003	.41607	.00000	.00000
.547	750.600	-.13587	.09908	-.02771	.00495	.00100	.00004	.41585	.00000	.00000
.542	799.980	-.13550	.09966	-.02828	.00455	.00099	.00004	.41255	.00000	.00000
	GRADIENT	.00000	.00000	.00000	.00000	.00000	.00000	.00000	.00000	.00000

RUN NO. 214/ 0 GRADIENT INTERVAL = -5.00/ 5.00

DLT-X	DLT-Z	CN	CA	CLM	CY	CYN	CBL	XCP/L	YCP/L	CPB
200.470	500.430	-.19690	.11723	.00939	.00648	-.00047	-.00003	.59168	.60067	.00000
200.600	596.270	-.14038	.09682	-.02408	.00504	.00078	.00004	.43848	.00000	.00000
200.570	748.000	-.13372	.09876	-.02729	.00500	.00090	.00004	.41578	.00000	.00000
200.450	800.370	-.13653	.10003	-.02817	.00508	.00087	.00003	.41419	.43826	.00000
	GRADIENT	.00000	.00000	.00000	.00000	.00000	.00000	.00000	.00000	.00000

AEDC VA422(IA17) ORB AND ET SEPARATING(ET DATA) (ATR017) (24 JUL 75)

REFERENCE DATA

SREF = 2690.0000 SQ.FT. XMRP = 1360.1000 IN. XT
LREF = 1290.3000 IN. YMRP = .0000 IN. YT
BREF = 1290.3000 IN. ZMRP = 416.4000 IN. ZT
SCALE = .0100

PARAMETRIC DATA

DLT-Y = .000 ALPHA = 5.000
BETA = .000 DLTALF = -15.000
DLTBTA = .000 MACH = 5.930
AILRON = .000 ELEVON = .000
GRID = 5.000

RUN NO. 215/ 0 GRADIENT INTERVAL = -5.00/ 5.00

DLT-X	DLT-Z	CN	CA	CLM	CY	CYN	CBL	XCP/L	YCP/L	CPB
400.420	502.530	-.20704	.12038	.01299	.00586	-.00106	.00005	.60216	.68524	.00000
400.360	600.610	-.14519	.09972	-.02118	.00529	.00037	.00007	.45644	.50898	.00000
400.380	750.020	-.13463	.09905	-.02752	.00412	.00069	.00005	.41554	.00000	.00000
400.550	800.040	-.13550	.09946	-.02788	.00460	.00069	.00003	.41460	.00000	.00000
	GRADIENT	.00000	.00000	.00000	.00000	.00000	.00000	.00000	.00000	.00000

AEDC VA422(IA17) ORB AND ET SEPARATING(ET DATA) (ATR019) (24 JUL 75)

REFERENCE DATA

SREF = 2690.0000 SQ.FT. XMRP = 1360.1000 IN. XT
LREF = 1290.3000 IN. YMRP = .0000 IN. YT
BREF = 1290.3000 IN. ZMRP = 416.4000 IN. ZT
SCALE = .0100

PARAMETRIC DATA

DLT-Y = .000 ALPHA = 5.000
BETA = 3.000 DLTALF = -20.000
DLTBTA = .000 MACH = 5.930
AILRON = .000 ELEVON = .000
GRID = 5.000

RUN NO. 220/ 0 GRADIENT INTERVAL = -5.00/ 5.00

DLT-X	DLT-Z	CN	CA	CLM	CY	CYN	CBL	XCP/L	YCP/L	CPB
.476	801.390	-.22558	.11055	-.03637	.00598	.00107	.00013	.44569	.43325	.00000
.381	900.230	-.22809	.11120	-.03808	.00505	.00094	.00013	.44177	.00000	.00000
.495	1000.200	-.23091	.11178	-.03835	.00501	.00082	.00013	.44232	.00000	.00000
	GRADIENT	.00000	.00000	.00000	.00000	.00000	.00000	.00000	.00000	.00000

RUN NO. 218/ 0 GRADIENT INTERVAL = -5.00/ 5.00

DLT-X	DLT-Z	CN	CA	CLM	CY	CYN	CBL	XCP/L	YCP/L	CPB
200.380	750.710	-.22542	.10925	-.03522	.00571	.00092	.00012	.44919	.44580	.00000
200.480	800.240	-.22573	.11011	-.03640	.00537	.00090	.00013	.44569	.00000	.00000
200.510	900.250	-.22695	.11265	-.03783	.00492	.00083	.00014	.44189	.00000	.00000
200.480	1000.100	-.23041	.11203	-.03901	.00438	.00055	.00014	.44006	.00000	.00000
	GRADIENT	.00000	.00000	.00000	.00000	.00000	.00000	.00000	.00000	.00000

AEDC VA422(IA17) ORB AND ET SEPARATING(ET DATA) (ATR019) (24 JUL 75)

REFERENCE DATA

SREF = 2690.0000 SQ.FT. XMRP = 1360.1000 IN. XT
LREF = 1290.3000 IN. YMRP = .0000 IN. YT
BREF = 1290.3000 IN. ZMRP = 416.4000 IN. ZT
SCALE = .0100

PARAMETRIC DATA

DLT-Y = .000 ALPHA = 5.000
BETA = 3.000 DLTALF = -20.000
DLTBTA = .000 MACH = 5.930
AILRON = .000 ELEVON = .000
GRID = 5.000

RUN NO. 217/ 0 GRADIENT INTERVAL = -5.00/ 5.00

DLT-X	DLT-Z	CN	CA	CLM	CY	CYN	CBL	XCP/L	YCP/L	CPB
400.470	749.640	-.23140	.10893	-.03245	.00531	.00087	.00012	.46037	.00000	.00000
400.440	800.350	-.22531	.11013	-.03622	.00533	.00094	.00013	.44603	.00000	.00000
400.550	900.390	-.22670	.11179	-.03793	.00525	.00110	.00014	.44144	.00000	.00000
400.640	1000.500	-.23117	.11133	-.03946	.00447	.00065	.00015	.43909	.00000	.00000
	GRADIENT	.00000	.00000	.00000	.00000	.00000	.00000	.00000	.00000	.00000

AEDC VA422(IA17) ORB AND ET SEPARATING(ET DATA) (ATR020) ([illegible] JUL 75)

REFERENCE DATA

SREF = 2690.0000 SQ.FT. XMRP = 1360.1000 IN. XT
LREF = 1290.3000 IN. YMRP = .0000 IN. YT
BREF = 1290.3000 IN. ZMRP = 416.4000 IN. ZT
SCALE = .0100

PARAMETRIC DATA

DLT-Y = .000 ALPHA = 5.000
BETA = 3.000 DLTALF = .000
DLTBTA = .000 MACH = 5.930
AILRON = .000 ELEVON = .000
GRID = 4.000

RUN NO. 161/ 0 GRADIENT INTERVAL = -5.00/ 5.00

DLT-X	DLT-Z	CN	CA	CLM	CY	CYN	CBL	XCP/L	YCP/L	CPB
.564	19.209	.01533	.09535	.02869	-.03013	-.01053	.00050	-.74921	.31422	.00000
.723	97.776	.02440	.09375	.02715	-.02832	-.01132	.00040	-.21898	.27903	.00000
.659	199.090	.03800	.09194	.02686	-.03201	-.01127	.00005	.06461	.31243	.00000
.691	300.120	.05412	.08805	.01887	-.03400	-.01049	.00034	.31468	.34288	.00000
.702	402.190	.05370	.08853	.01877	-.03433	-.01068	.00033	.31415	.34139	.00000
.625	501.150	.05480	.08874	.01858	-.03518	-.01058	.00035	.32184	.34866	.00000
.825	598.430	.05481	.08975	.01924	-.03471	-.01062	.00035	.31306	.34459	.00000
	GRADIENT	.00000	.00000	.00000	.00000	.00000	.00000	.00000	.00000	.00000

RUN NO. 162/ 0 GRADIENT INTERVAL = -5.00/ 5.00

DLT-X	DLT-Z	CN	CA	CLM	CY	CYN	CBL	XCP/L	YCP/L	CPB
200.620	[illegible].546	.00959	.09418	.01842	-.02818	-.00846	.00052	-.78385	.34860	.00000
200.660	100.860	.01620	.09428	.02708	-.02872	-.01094	.00045	-.60942	.29231	.00000
200.710	200.580	.03389	.09323	.02893	-.03161	-.01128	.00004	-.03792	.30906	.00000
200.640	300.310	.05286	.08697	.01909	-.03389	-.01061	.00033	.30603	.33967	.00000
200.640	398.120	.05439	.08866	.01899	-.03497	-.01070	.00034	.31441	.34462	.00000
200.790	498.310	.05404	.08884	.01892	-.03415	-.01041	.00035	.31370	.34537	.00000
200.770	599.720	.05458	.08923	.01959	-.03512	-.01081	.00035	.30757	.34336	.00000
	GRADIENT	.00000	.00000	.00000	.00000	.00000	.00000	.00000	.00000	.00000

ORIGINAL PAGE IS OF POOR QUALITY

AEDC VA422(IA17) ORB AND ET SEPARATING(ET DATA) (ATR021) (24 JUL 75)

REFERENCE DATA

SREF = 2690.0000 SQ.FT. XMRP = 1360.1000 IN. XT
LREF = 1290.3000 IN. YMRP = .0000 IN. YT
BREF = 1290.3000 IN. ZMRP = 416.4000 IN. ZT
SCALE = .0100

PARAMETRIC DATA

DLT-Y = .000 ALPHA = 5.000
BETA = 3.000 DLTALF = -5.000
DLTBTA = .000 MACH = 5.930
AILRON = .000 ELEVON = .000
GRID = 4.000

RUN NO. 165/ 0 GRADIENT INTERVAL = -5.00/ 5.00

DLT-X	DLT-Z	CN	CA	CLM	CY	CYN	CBL	XCP/L	YCP/L	CPB
.641	200.310	-.05547	.10306	.02434	-.02998	-.01259	.00032	.86496	.26500	.00000
.623	300.000	-.02233	.09431	.01218	-.03107	-.01218	.00001	.93955	.28457	.00000
.513	401.650	-.00635	.08900	.00232	-.03287	-.01137	.00031	.81394	.31665	.00000
.716	502.050	-.00635	.08973	.00204	-.03266	-.01129	.00030	.78257	.31671	.00000
.604	600.500	-.00610	.08978	.00211	-.03339	-.01136	.00031	.79959	.32055	.00000
.655	750.020	-.00537	.09130	.00297	-.03433	-.01204	.00033	.94532	.31326	.00000
-.151	800.700	-.00624	.09200	.00271	-.03540	-.01256	.00033	.86146	.31038	.00000
	GRADIENT	.00000	.00000	.00000	.00000	.00000	.00000	.00000	.00000	.00000

RUN NO. 166/ 0 GRADIENT INTERVAL = -5.00/ 5.00

DLT-X	DLT-Z	CN	CA	CLM	CY	CYN	CBL	XCP/L	YCP/L	CPB
200.610	200.200	-.06272	.10415	.02554	-.03029	-.01183	.00027	.84286	.28554	.00000
200.560	300.080	-.03235	.09678	.01766	-.03066	-.01236	.00000	.93984	.27664	.00000
200.630	399.350	-.00623	.08810	.00276	-.03205	-.01124	.00030	.86788	.31338	.00000
200.680	497.440	-.00609	.08977	.00238	-.03281	-.01126	.00031	.83176	.31865	.00000
200.690	599.110	-.00596	.08949	.00244	-.03282	-.01127	.00031	.84514	.31835	.00000
200.610	749.960	-.00555	.09158	.00303	-.03488	-.01265	.00033	.93961	.30495	.00000
200.770	800.150	-.00679	.09227	.00266	-.03475	-.01279	.00034	.83211	.30128	.00000
	GRADIENT	.00000	.00000	.00000	.00000	.00000	.00000	.00000	.00000	.00000

AEDC VA422(IA17) ORB AND ET SEPARATING(ET DATA) (ATR022) (24 JUL 75)

REFERENCE DATA

SREF = 2690.0000 SQ.FT. XMRP = 1360.1000 IN. XT
LREF = 1290.3000 IN. YMRP = .0000 IN. YT
BREF = 1290.3000 IN. ZMRP = 416.4000 IN. ZT
SCALE = .0100

PARAMETRIC DATA

DLT-Y = .000 ALPHA = 5.000
BETA = 3.000 DLTALF = -10.000
DLTBTA = .000 MACH = 5.930
AILRON = .000 ELEVON = .000
GRID = 4.000

RUN NO. 167/ 0 GRADIENT INTERVAL = -5.00/ 5.00

DLT-X	DLT-Z	CN	CA	CLM	CY	CYN	CBL	XCP/L	YCP/L	CPB
.590	401.110	-.08890	.09923	-.00030	-.03055	-.01173	.00005	.55595	.29013	.00000
.533	502.960	-.06609	.09329	-.01391	-.03166	-.01057	.00029	.41128	.32498	.00000
.619	601.760	-.06729	.09375	-.01425	-.03250	-.01082	.00030	.41041	.32578	.00000
.715	750.010	-.06482	.09613	-.01357	-.03301	-.01105	.00031	.41211	.32447	.00000
-.623	803.190	-.06688	.09615	-.01395	-.03466	-.01164	.00033	.41256	.32364	.00000
	GRADIENT	.00000	.00000	.00000	.00000	.00000	.00000	.00000	.00000	.00000

RUN NO. 168/ 0 GRADIENT INTERVAL = -5.00/ 5.00

DLT-X	DLT-Z	CN	CA	CLM	CY	CYN	CBL	XCP/L	YCP/L	CPB
200.450	399.860	-.09858	.10190	.00536	-.03191	-.01141	.00005	.59636	.30846	.00000
200.600	497.650	-.06738	.09250	-.01322	-.03136	-.01064	.00025	.42130	.32130	.00000
200.540	598.050	-.06741	.09383	-.01392	-.03284	-.01084	.00031	.41413	.32778	.00000
200.670	749.640	-.06565	.09539	-.01351	-.03357	-.01133	.00033	.41462	.32258	.00000
200.710	800.070	-.06595	.09640	-.01372	-.03443	-.01181	.00033	.41298	.31859	.00000
	GRADIENT	.00000	.00000	.00000	.00000	.00000	.00000	.00000	.00000	.00000

RUN NO. 169/ 0 GRADIENT INTERVAL = -5.00/ 5.00

DLT-X	DLT-Z	CN	CA	CLM	CY	CYN	CBL	XCP/L	YCP/L	CPB
400.620	402.520	-.11205	.10739	.01186	-.03033	-.01151	.00009	.63229	.29316	.00000
400.600	500.960	-.07043	.09350	-.01193	-.03155	-.01129	.00022	.42999	.30843	.00000
400.750	600.130	-.06594	.09391	-.01373	-.03288	-.01100	.00032	.41285	.32450	.00000
400.630	750.040	-.06580	.09591	-.01328	-.03468	-.01169	.00032	.41723	.32280	.00000
400.560	800.150	-.06614	.09711	-.01349	-.03522	-.01228	.00033	.41585	.31464	.00000
	GRADIENT	.00000	.00000	.00000	.00000	.00000	.00000	.00000	.00000	.00000

AEDC VA422(IA17) ORB AND ET SEPARATING(ET DATA) (ATR023) (24 JUL 75)

REFERENCE DATA

SREF = 2690.0000 SQ.FT. XMRP = 1360.1000 IN. XT
LREF = 1290.3000 IN. YMRP = .0000 IN. YT
BREF = 1290.3000 IN. ZMRP = 416.4000 IN. ZT
SCALE = .0100

PARAMETRIC DATA

DLT-Y = .000 ALPHA = 5.000
BETA = 3.000 DLTALF = -15.000
DLTBTA = .000 MACH = 5.930
AILRON = .000 ELEVON = .000
GRID = 4.000

RUN NO. 173/ 0 GRADIENT INTERVAL = -5.00/ 5.00

DLT-X	DLT-Z	CN	CA	CLM	CY	CYN	CBL	XCP/L	YCP/L	CPB
.561	504.150	-.17423	.10965	-.00382	-.03384	-.01012	-.00001	.54304	.34935	.00000
.578	604.660	-.13767	.09952	-.02636	-.03456	-.00954	.00028	.42458	.36555	.00000
.628	750.680	-.13827	.10129	-.02645	-.03584	-.00977	.00032	.42469	.36789	.00000
.515	799.940	-.13715	.10181	-.02682	-.03650	-.01027	.00032	.42175	.36236	.00000
	GRADIENT	.00000	.00000	.00000	.00000	.00000	.00000	.00000	.00000	.00000

RUN NO. 174/ 0 GRADIENT INTERVAL = -5.00/ 5.00

DLT-X	DLT-Z	CN	CA	CLM	CY	CYN	CBL	XCP/L	YCP/L	CPB
200.520	500.340	-.19055	.11482	.00498	-.03468	-.00956	.00017	.57659	.36583	.00000
200.590	596.210	-.14049	.09873	-.02410	-.03360	-.00969	.00019	.43848	.35696	.00000
200.520	748.210	-.13533	.10125	-.02607	-.03652	-.01039	.00032	.42375	.35951	.00000
200.560	800.220	-.13633	.10177	-.02672	-.03649	-.01036	.00033	.42142	.35999	.00000
	GRADIENT	.00000	.00000	.00000	.00000	.00000	.00000	.00000	.00000	.00000

RUN NO. 175/ 0 GRADIENT INTERVAL = -5.00/ 5.00

DLT-X	DLT-Z	CN	CA	CLM	CY	CYN	CBL	XCP/L	YCP/L	CPB
400.510	502.490	-.20213	.11711	.01018	-.03314	-.01082	.00010	.59351	.33027	.00000
400.610	600.590	-.14434	.10140	-.02159	-.03487	-.00982	.00019	.45382	.36163	.00000
400.550	750.010	-.13672	.10079	-.02626	-.03618	-.01011	.00031	.42417	.36304	.00000
400.500	800.060	-.13727	.10209	-.02671	-.03804	-.01073	.00033	.42240	.36131	.00000
	GRADIENT	.00000	.00000	.00000	.00000	.00000	.00000	.00000	.00000	.00000

AEDC VA422(IA17) ORB AND ET SEPARATING(ET DATA) (ATR025) (24 JUL 75)

REFERENCE DATA

SREF = 2690.0000 SQ.FT. XMRP = 1360.1000 IN. XT
LREF = 1290.3000 IN. YMRP = .0000 IN. YT
BREF = 1290.3000 IN. ZMRP = 416.4000 IN. ZT
SCALE = .0100

PARAMETRIC DATA

DLT-Y = .000 ALPHA = 5.000
BETA = 3.000 DLTALF = -20.000
DLTBTA = .000 MACH = 5.930
AILRON = .000 ELEVON = .000
GRID = 4.000

RUN NO. 180/ 0 GRADIENT INTERVAL = -5.00/ 5.00

DLT-X	DLT-Z	CN	CA	CLM	CY	CYN	CBL	XCP/L	YCP/L	CPB
.476	801.250	-.22824	.11283	-.03458	-.04178	-.00900	.00031	.45256	.40782	.00000
.580	900.180	-.23142	.11303	-.03586	-.04184	-.00948	.00033	.45009	.40013	.00000
.564	1000.100	-.23267	.11351	-.03639	-.04252	-.00899	.00032	.44908	.41061	.00000
	GRADIENT	.00000	.00000	.00000	.00000	.00000	.00000	.00000	.00000	.00000

RUN NO. 176/ 0 GRADIENT INTERVAL = -5.00/ 5.00

DLT-X	DLT-Z	CN	CA	CLM	CY	CYN	CBL	XCP/L	YCP/L	CPB
200.530	750.730	-.22932	.11179	-.03359	-.04151	-.00879	.00031	.45600	.41037	.00000
200.560	800.200	-.22931	.11263	-.03438	-.04140	-.00933	.00033	.45360	.40086	.00000
200.480	900.220	-.23076	.11392	-.03593	-.04270	-.00961	.00033	.44955	.40119	.00000
200.610	1000.200	-.23334	.11387	-.03674	-.04331	-.00933	.00034	.44833	.40778	.00000
	GRADIENT	.00000	.00000	.00000	.00000	.00000	.00000	.00000	.00000	.00000

RUN NO. 177/ 0 GRADIENT INTERVAL = -5.00/ 5.00

DLT-X	DLT-Z	CN	CA	CLM	CY	CYN	CBL	XCP/L	YCP/L	CPB
400.570	749.660	-.23233	.11141	-.03206	-.03989	-.00878	.00019	.46194	.40451	.00000
400.600	800.340	-.22928	.11299	-.03445	-.04172	-.00918	.00032	.45336	.40454	.00000
400.660	900.320	-.23131	.11424	-.03603	-.04424	-.00979	.00035	.44952	.40377	.00000
400.690	1000.400	-.23200	.11332	-.03707	-.04303	-.00968	.00033	.44671	.40112	.00000
	GRADIENT	.00000	.00000	.00000	.00000	.00000	.00000	.00000	.00000	.00000

ORIGINAL PAGE IS OF POOR QUALITY

AEDC VA422(IA17) ORB AND ET SEPARATING(ET DATA) (ATR026) (24 JUL 75)

REFERENCE DATA

SREF = 2890.0000 SQ.FT. XMRP = 1380.1000 IN. XT
LREF = 1290.3000 IN. YMRP = .0000 IN. YT
BREF = 1290.3000 IN. ZMRP = 418.4000 IN. ZT
SCALE = .0100

PARAMETRIC DATA

DLT-Y = .000 ALPHA = -5.000
BETA = .000 DLTALF = .000
DLTBTA = .000 MACH = 5.930
AILRON = .000 ELEVON = .000
GRID = 6.000

RUN NO. 239/ 0 GRADIENT INTERVAL = -5.00/ 5.00

DLT-X	DLT-Z	CN	CA	CLM	CY	CYN	CBL	XCP/L	YCP/L	CPB
.586	19.272	-.09548	.09755	-.01506	.00654	.00095	.00030	.44811	.45689	.00000
.594	101.620	-.09066	.09605	-.01084	.00741	.00068	.00010	.47480	.49649	.00000
.573	201.870	-.08219	.10102	-.00775	.00484	.00047	.00002	.49245	.48981	.00000
.505	301.450	-.07715	.09791	-.01379	.00511	.00070	.00003	.43350	.46289	.00000
.538	400.210	-.07143	.09623	-.01750	.00484	.00068	.00002	.38715	.45968	.00000
.543	500.220	-.07265	.09438	-.01872	.00369	.00036	.00004	.37836	.00000	.00000
.567	600.150	-.07217	.09271	-.01770	.00498	.00073	.00002	.38697	.45518	.00000
	GRADIENT	.00000	.00000	.00000	.00000	.00000	.00000	.00000	.00000	.00000

RUN NO. 240/ 0 GRADIENT INTERVAL = -5.00/ 5.00

DLT-X	DLT-Z	CN	CA	CLM	CY	CYN	CBL	XCP/L	YCP/L	CPB
200.520	23.112	-.10235	.09589	-.02252	.00896	.00027	.00028	.40464	.53749	.00000
200.640	98.157	-.08789	.09644	-.01169	.00654	.00066	.00006	.46544	.48814	.00000
200.460	198.620	-.08016	.09784	-.00966	.00367	.00029	.00005	.47415	.00000	.00000
200.490	297.890	-.08158	.10238	-.00892	.00541	.00071	.00001	.48194	.46638	.00000
200.540	399.540	-.07311	.09576	-.01718	.00407	.00051	.00003	.39420	.00000	.00000
200.630	500.160	-.07382	.09487	-.01827	.00405	.00047	.00004	.38542	.00000	.00000
200.640	600.070	-.07204	.09298	-.01816	.00421	.00032	.00003	.38225	.00000	.00000
	GRADIENT	.00000	.00000	.00000	.00000	.00000	.00000	.00000	.00000	.00000

RUN NO. 241/ 0 GRADIENT INTERVAL = -5.00/ 5.00

DLT-X	DLT-Z	CN	CA	CLM	CY	CYN	CBL	XCP/L	YCP/L	CPB
400.660	23.322	-.09753	.09393	-.02788	.00663	.00039	.00020	.35864	.51745	.00000
400.500	102.730	-.09275	.09651	-.01299	.00447	.00083	.00007	.46049	.00000	.00000
400.420	202.240	-.07985	.09540	-.01310	.00447	.00063	.00003	.44369	.00000	.00000
400.540	300.330	-.07926	.10060	-.00939	.00489	.00045	.00005	.47556	.49426	.00000
400.430	400.130	-.07822	.09899	-.01338	.00472	.00013	.00008	.43888	.53950	.00000
400.530	500.130	-.07283	.09495	-.01793	.00398	.00039	.00005	.38638	.00000	.00000
400.450	600.130	-.07159	.09315	-.01797	.00373	.00035	.00004	.38298	.00000	.00000
	GRADIENT	.00000	.00000	.00000	.00000	.00000	.00000	.00000	.00000	.00000

AEDC VA422(IA17) ORB AND ET SEPARATING(ET DATA) (ATR027) (24 JUL 75)

REFERENCE DATA

SREF = 2690.0000 SQ.FT. XMRP = 1360.1000 IN. XT
LREF = 1290.3000 IN. YMRP = .0000 IN. YT
BREF = 1290.3000 IN. ZMRP = 416.4000 IN. ZT
SCALE = .0100

PARAMETRIC DATA

DLT-Y = .000 ALPHA = -5.000
BETA = .000 DLTALF = -5.000
DLTBTA = .000 MACH = 5.930
AILRON = .000 ELEVON = .000
GRID = 6.000

RUN NO. 245/ 0 GRADIENT INTERVAL = -5.00/ 5.00

DLT-X	DLT-Z	CN	CA	CLM	CY	CYN	CBL	XCP/L	YCP/L	CPB
.480	204.150	-.18779	.11825	-.00560	.00737	-.00023	.00011	.53752	.58031	.00000
.497	303.020	-.16532	.11148	-.01884	.00515	.00041	.00004	.47871	.00000	.00000
.447	400.830	-.15272	.10837	-.02448	.00465	.00020	.00010	.44638	.00000	.00000
.585	500.340	-.14724	.10206	-.03120	.00427	.00075	.00004	.41030	.00000	.00000
.158	598.280	-.14296	.10068	-.03014	.00361	.00068	.00002	.41106	.00000	.00000
	GRADIENT	.00000	.00000	.00000	.00000	.00000	.00000	.00000	.00000	.00000

RUN NO. 246/ 0 GRADIENT INTERVAL = -5.00/ 5.00

DLT-X	DLT-Z	CN	CA	CLM	CY	CYN	CBL	XCP/L	YCP/L	CPB
200.430	198.170	-.18252	.11569	-.00973	.00644	.00026	.00000	.52109	.53024	.00000
200.500	297.350	-.15797	.10908	-.02124	.00625	.00098	.00004	.46443	.44827	.00000
200.480	397.970	-.15699	.11231	-.02082	.00470	.00035	.00003	.46570	.00000	.00000
200.520	500.010	-.14968	.10377	-.02916	.00450	.00071	.00005	.42224	.00000	.00000
200.580	600.140	-.14603	.10201	-.03043	.00448	.00091	.00005	.41274	.00000	.00000
	GRADIENT	.00000	.00000	.00000	.00000	.00000	.00000	.00000	.00000	.00000

AEDC VA422(IA17) ORB AND ET SEPARATING(ET DATA) (ATR028) (24 JUL 75)

REFERENCE DATA

SREF = 2690.0000 SQ.FT. XMRP = 1360.1000 IN. XT
LREF = 1290.3000 IN. YMRP = .0000 IN. YT
BREF = 1290.3000 IN. ZMRP = 416.4000 IN. ZT
SCALE = .0100

PARAMETRIC DATA

DLT-Y = .000 ALPHA = -5.000
BETA = .000 DLTALF = -10.000
DLTBTA = .000 MACH = 5.930
AILRON = .000 ELEVON = .000
GRID = 6.000

RUN NO. 247/ 0 GRADIENT INTERVAL = -5.00/ 5.00

DLT-X	DLT-Z	CN	CA	CLM	CY	CYN	CBL	XCP/L	YCP/L	CPB
.503	404.250	-.26488	.12862	-.02199	.00706	.00017	.00025	.50033	.54110	.00000
.535	500.910	-.25275	.12197	-.02907	.00616	.00011	.00026	.47800	.54625	.00000
.441	600.360	-.23688	.11202	-.03839	.00543	.00095	.00015	.44511	.00000	.00000
.416	750.230	-.23377	.11194	-.03639	.00521	.00093	.00019	.44959	.00000	.00000
.208	800.930	-.23326	.11206	-.03625	.00507	.00110	.00020	.44977	.00000	.00000
	GRADIENT	.00000	.00000	.00000	.00000	.00000	.00000	.00000	.00000	.00000

ORIGINAL PAGE IS OF POOR QUALITY

AEDC VA422(IA17) ORB AND ET SEPARATING(ET DATA) (ATR028) (24 JUL 75)

REFERENCE DATA

SREF = 2690.0000 SQ.FT. XMRP = 1360.1000 IN. XT
LREF = 1290.3000 IN. YMRP = .0000 IN. YT
BREF = 1290.3000 IN. ZMRP = 416.4000 IN. ZT
SCALE = .0100

PARAMETRIC DATA

DLT-Y = .000 ALPHA = -5.000
BETA = .000 DLTALF = -10.000
DLTBTA = .000 MACH = 5.930
AILRON = .000 ELEVON = .000
GRID = 6.000

RUN NO. 248/ 0 GRADIENT INTERVAL = -5.00/ 5.00

DLT-X	DLT-Z	CN	CA	CLM	CY	CYN	CBL	XCP/L	YCP/L	CPB
200.570	397.890	-.25358	.12082	-.03033	.00838	.00127	.00022	.47478	.41911	.00000
200.400	498.550	-.25772	.12452	-.02701	.00625	.00022	.00022	.48512	.53423	.00000
200.470	600.060	-.24601	.11659	-.03227	.00699	.00064	.00021	.46671	.49422	.00000
200.410	750.150	-.23435	.11140	-.03675	.00575	.00107	.00020	.44877	.42895	.00000
200.430	800.180	-.23424	.11112	-.03658	.00526	.00075	.00018	.44922	.00000	.00000
	GRADIENT	.00000	.00000	.00000	.00000	.00000	.00000	.00000	.00000	.00000

RUN NO. 249/ 0 GRADIENT INTERVAL = -5.00/ 5.00

DLT-X	DLT-Z	CN	CA	CLM	CY	CYN	CBL	XCP/L	YCP/L	CPB
400.530	401.160	-.24081	.11175	-.03041	.00546	.00134	.00020	.44111	.00000	.00000
400.480	500.630	-.25188	.11855	-.03158	.00656	.00103	.00016	.47075	.44872	.00000
400.540	600.120	-.25368	.12260	-.02877	.00668	-.00010	.00034	.48460	.56919	.00000
400.470	750.220	-.23414	.11092	-.03718	.00556	.00089	.00017	.44740	.00000	.00000
400.490	800.140	-.23256	.11117	-.03711	.00556	.00084	.00016	.44687	.00000	.00000
	GRADIENT	.00000	.00000	.00000	.00000	.00000	.00000	.00000	.00000	.00000

AEDC VA422(IA17) ORB AND ET SEPARATING(ET DATA) (ATR029) (24 JUL 75)

REFERENCE DATA

SREF = 2690.0000 SQ.FT. XMRP = 1360.1000 IN. XT
LREF = 1290.3000 IN. YMRP = .0000 IN. YT
BREF = 1290.3000 IN. ZMRP = 416.4000 IN. ZT
SCALE = .0100

PARAMETRIC DATA

DLT-Y = .000 ALPHA = -5.000
BETA = .000 DLTALF = -15.000
DLTBTA = .000 MACH = 5.930
AILRON = .000 ELEVON = .000
GRID = 6.000

RUN NO. 253/ 0 GRADIENT INTERVAL = -5.00/ 5.00

DLT-X	DLT-Z	CN	CA	CLM	CY	CYN	CBL	XCP/L	YCP/L	CPB
.458	500.380	-.37900	.14048	-.02487	.00672	.00079	.00039	.51286	.00000	.00000
.485	604.690	-.39400	.14787	-.01338	.00941	-.00029	.00036	.53461	.57956	.00000
.446	750.470	-.34709	.13019	-.03731	.00800	.00029	.00034	.48324	.53340	.00000
.723	804.130	-.34673	.12970	-.03666	.00849	.00054	.00033	.48447	.51367	.00000
	GRADIENT	.00000	.00000	.00000	.00000	.00000	.00000	.00000	.00000	.00000

AEDC VA422(1A17) ORB AND ET SEPARATING(ET DATA) (ATR029) (24 JUL 75)

REFERENCE DATA

SREF = 2690.0000 SQ.FT. XMRP = 1360.1000 IN. XT
LREF = 1290.3000 IN. YMRP = .0000 IN. YT
BREF = 1290.3000 IN. ZMRP = 416.4000 IN. ZT
SCALE = .0100

PARAMETRIC DATA

DLT-Y = .000 ALPHA = -5.000
BETA = .000 DLTALF = -15.000
DLTBTA = .000 MACH = 5.930
AILRON = .000 ELEVON = .000
GRID = 6.000

RUN NO. 254/ 0 GRADIENT INTERVAL = -5.00/ 5.00

DLT-X	DLT-Z	CN	CA	CLM	CY	CYN	CBL	XCP/L	YCP/L	CPB
200.450	500.370	-.38359	.13234	-.03552	.00510	.00109	.00033	.48009	.00000	.00000
200.270	597.310	-.37091	.14046	-.02657	.00964	.00027	.00029	.50829	.53902	.00000
200.430	749.810	-.35759	.12979	-.03260	.00756	-.00004	.00030	.49465	.56246	.00000
200.400	800.280	-.34712	.12737	-.03724	.00823	.00032	.00033	.48340	.53139	.00000
	GRADIENT	.00000	.00000	.00000	.00000	.00000	.00000	.00000	.00000	.00000

RUN NO. 255/ 0 GRADIENT INTERVAL = -5.00/ 5.00

DLT-X	DLT-Z	CN	CA	CLM	CY	CYN	CBL	XCP/L	YCP/L	CPB
400.420	501.320	-.34875	.12407	-.04649	.00642	.00119	.00034	.46521	.00000	.00000
400.450	600.620	-.36603	.13343	-.03273	.00807	.00115	.00034	.49588	.45883	.00000
400.370	750.250	-.36471	.13680	-.02687	.00796	-.00041	.00033	.50687	.59414	.00000
400.380	800.350	-.35548	.12876	-.03285	.00807	.00043	.00030	.49378	.52102	.00000
	GRADIENT	.00000	.00000	.00000	.00000	.00000	.00000	.00000	.00000	.00000

ORIGINAL PAGE IS OF POOR QUALITY

AEDC VA422(1A17) ORB AND ET SEPARATING(ET DATA) (ATR031) (24 JUL 75)

REFERENCE DATA

SREF = 2690.0000 SQ.FT. XMRP = 1360.1000 IN. XT
LREF = 1290.3000 IN. YMRP = .0000 IN. YT
BREF = 1290.3000 IN. ZMRP = 416.4000 IN. ZT
SCALE = .0100

PARAMETRIC DATA

DLT-Y = .000 ALPHA = -5.000
BETA = .000 DLTALF = -20.000
DLTBTA = .000 MACH = 5.930
AILRON = .000 ELEVON = .000
GRID = 6.000

RUN NO. 260/ 0 GRADIENT INTERVAL = -5.00/ 5.00

DLT-X	DLT-Z	CN	CA	CLM	CY	CYN	CBL	XCP/L	YCP/L	CPB
.470	804.590	-.50530	.14867	-.02253	.00949	.00008	.00047	.52719	.55218	.00000
.492	900.850	-.48207	.14922	-.03303	.00999	.00025	.00049	.51047	.54091	.00000
.432	1000.400	-.48074	.14797	-.03312	.00973	.00026	.00047	.51021	.53992	.00000
	GRADIENT	.00000	.00000	.00000	.00000	.00000	.00000	.00000	.00000	.00000

AEDC VA422(IA17) ORB AND ET SEPARATING(ET DATA) (ATR031) (24 JUL 75)

REFERENCE DATA

SREF = 2690.0000 SQ.FT. XMRP = 1360.1000 IN. XT
LREF = 1290.3000 IN. YMRP = .0000 IN. YT
BREF = 1290.3000 IN. ZMRP = 416.4000 IN. ZT
SCALE = .0100

PARAMETRIC DATA

DLT-Y = .000 ALPHA = -5.000
BETA = .000 DLTALF = -20.000
DLTBTA = .000 MACH = 5.930
AILRON = .000 ELEVON = .000
GRID = 6.000

RUN NO. 256/ 0 GRADIENT INTERVAL = -5.00/ 5.00

DLT-X	DLT-Z	CN	CA	CLM	CY	CYN	CBL	XCP/L	YCP/L	CPB
200.480	753.680	-.56718	.18148	.01189	.01177	.00030	.00134	.57298	.54030	.00000
200.420	802.350	-.51126	.15764	-.01666	.01088	.00005	.00051	.53558	.55500	.00000
200.470	900.350	-.48475	.14775	-.03098	.01069	.00024	.00050	.51369	.54248	.00000
200.530	1000.400	-.47736	.14720	-.03428	.01079	.00035	.00049	.50817	.53580	.00000
	GRADIENT	.00000	.00000	.00000	.00000	.00000	.00000	.00000	.00000	.00000

RUN NO. 257/ 0 GRADIENT INTERVAL = -5.00/ 5.00

DLT-X	DLT-Z	CN	CA	CLM	CY	CYN	CBL	XCP/L	YCP/L	CPB
400.450	747.020	-.55202	.17666	.00301	.01074	-.00012	.00127	.56215	.56584	.00000
400.400	798.680	-.50705	.15901	-.02012	.01161	-.00026	.00088	.53062	.57374	.00000
400.500	900.180	-.49604	.15039	-.02537	.00954	.00019	.00045	.52260	.54407	.00000
400.420	1000.400	-.47731	.14589	-.03443	.00982	.00031	.00045	.50795	.53655	.00000
	GRADIENT	.00000	.00000	.00000	.00000	.00000	.00000	.00000	.00000	.00000

AEDC VA422(IA17) ORB AND ET SEPARATING(ET DATA) (ATR032) (24 JUL 75)

REFERENCE DATA

SREF = 2690.0000 SQ.FT. XMRP = 1360.1000 IN. XT
LREF = 1290.3000 IN. YMRP = .0000 IN. YT
BREF = 1290.3000 IN. ZMRP = 416.4000 IN. ZT
SCALE = .0100

PARAMETRIC DATA

DLT-Y = .000 ALPHA = -5.000
BETA = 3.000 DLTALF = .000
DLTBTA = .000 MACH = 5.930
AILRON = .000 ELEVON = .000
GRID = 7.000

RUN NO. 279/ 0 GRADIENT INTERVAL = -5.00/ 5.00

DLT-X	DLT-Z	CN	CA	CLM	CY	CYN	CBL	XCP/L	YCP/L	CPB
.605	19.325	-.09937	.09855	-.01185	-.03625	-.00885	.00053	.47501	.38778	.00000
.608	101.600	-.09375	.09803	-.00913	-.03490	-.00931	.00040	.49028	.37198	.00000
.622	202.090	-.08352	.10298	-.00600	-.03381	-.01150	.00033	.50813	.32069	.00000
.555	301.200	-.07492	.09899	-.01193	-.03496	-.01248	.00027	.44712	.30902	.00000
.599	400.230	-.07274	.09678	-.01557	-.03514	-.01245	.00033	.40878	.31077	.00000
.710	500.230	-.07263	.09634	-.01560	-.03387	-.01182	.00031	.40824	.31452	.00000
.883	600.220	-.07174	.09604	-.01480	-.03215	-.01062	.00029	.41418	.32753	.00000
	GRADIENT	.00000	.00000	.00000	.00000	.00000	.00000	.00000	.00000	.00000

AEDC VA422(IA17) ORB AND ET SEPARATING(ET DATA) (ATR032) (24 JUL 75)

REFERENCE DATA

SREF = 2690.0000 SQ.FT. XMRP = 1360.1000 IN. XT
LREF = 1290.3000 IN. YMRP = .0000 IN. YT
BREF = 1290.3000 IN. ZMRP = 416.4000 IN. ZT
SCALE = .0100

PARAMETRIC DATA

DLT-Y = .000 ALPHA = -5.000
BETA = 3.000 DLTALF = .000
DLTBTA = .000 MACH = 5.930
AILRON = .000 ELEVON = .000
GRID = 7.000

RUN NO. 280/ 0 GRADIENT INTERVAL = -5.00/ 5.00

DLT-X	DLT-Z	CN	CA	CLM	CY	CYN	CBL	XCP/L	YCP/L	CPB
200.520	23.161	-.10582	.09529	-.02150	-.03674	-.00851	.00058	.41639	.39659	.00000
200.580	98.150	-.09264	.09835	-.00983	-.03731	-.00934	.00038	.48419	.38339	.00000
200.660	198.440	-.08258	.09968	-.00785	-.03530	-.01089	.00039	.49190	.34284	.00000
200.550	297.870	-.08051	.10321	-.00729	-.03464	-.01248	.00031	.49507	.30667	.00000
200.560	399.650	-.07219	.09793	-.01495	-.03463	-.01232	.00030	.41363	.30985	.00000
200.540	500.180	-.07299	.09588	-.01604	-.03406	-.01199	.00032	.40477	.31235	.00000
200.580	600.150	-.07234	.09573	-.01523	-.03321	-.01110	.00030	.41127	.32492	.00000
	GRADIENT	.00000	.00000	.00000	.00000	.00000	.00000	.00000	.00000	.00000

AEDC VA422(IA17) ORB AND ET SEPARATING(ET DATA) (ATR033) (24 JUL 75)

REFERENCE DATA

SREF = 2690.0000 SQ.FT. XMRP = 1360.1000 IN. XT
LREF = 1290.3000 IN. YMRP = .0000 IN. YT
BREF = 1290.3000 IN. ZMRP = 416.4000 IN. ZT
SCALE = .0100

PARAMETRIC DATA

DLT-Y = .000 ALPHA = -5.000
BETA = 3.000 DLTALF = -5.000
DLTBTA = .000 MACH = 5.930
AILRON = .000 ELEVON = .000
GRID = 7.000

RUN NO. 283/ 0 GRADIENT INTERVAL = -5.00/ 5.00

DLT-X	DLT-Z	CN	CA	CLM	CY	CYN	CBL	XCP/L	YCP/L	CPB
.494	204.030	-.19209	.11848	-.00319	-.03876	-.00951	.00032	.54675	.38688	.00000
.558	302.750	-.16597	.11054	-.01689	-.03874	-.01061	.00039	.48726	.36708	.00000
.656	400.770	-.15507	.10822	-.02270	-.03802	-.01120	.00030	.45606	.35265	.00000
.608	500.380	-.14858	.10316	-.02818	-.03754	-.01061	.00033	.42586	.36098	.00000
.252	598.120	-.14526	.10264	-.02737	-.03599	-.01007	.00032	.42671	.36295	.00000
	GRADIENT	.00000	.00000	.00000	.00000	.00000	.00000	.00000	.00000	.00000

RUN NO. 284/ 0 GRADIENT INTERVAL = -5.00/ 5.00

DLT-X	DLT-Z	CN	CA	CLM	CY	CYN	CBL	XCP/L	YCP/L	CPB
200.560	198.610	-.18599	.11308	-.00888	-.04141	-.00869	.00029	.52499	.41171	.00000
200.570	297.160	-.16138	.10895	-.01947	-.04112	-.01019	.00049	.47405	.38526	.00000
200.470	398.070	-.16288	.11262	-.01804	-.03962	-.01158	.00039	.48085	.35412	.00000
200.660	499.970	-.15072	.10331	-.02683	-.03825	-.01139	.00030	.43492	.35037	.00000
200.680	600.200	-.14723	.10389	-.02790	-.03718	-.01055	.00034	.42597	.36005	.00000
	GRADIENT	.00000	.00000	.00000	.00000	.00000	.00000	.00000	.00000	.00000

AEDC VA422(IA17) ORB AND ET SEPARATING(ET DATA) (ATR034) (24 JUL 75)

REFERENCE DATA

SREF = 2690.0000 SQ.FT. XMRP = 1380.1000 IN. XT
LREF = 1290.3000 IN. YMRP = .0000 IN. YT
BREF = 1290.3000 IN. ZMRP = 418.4000 IN. ZT
SCALE = .0100

PARAMETRIC DATA

DLT-Y = .000 ALPHA = -5.000
BETA = 3.000 DLTALF = -10.000
DLTBTA = .000 MACH = 5.930
AILRON = .000 ELEVON = .000
GRID = 7.000

RUN NO. 285/ 0 GRADIENT INTERVAL = -5.00/ 5.00

DLT-X	DLT-Z	CN	CA	CLM	CY	CYN	CBL	XCP/L	YCP/L	CPB
.470	404.110	-.26608	.12376	-.02029	-.04476	-.00908	.00041	.50506	.41692	.00000
.559	500.850	-.25498	.12026	-.02645	-.04269	-.00962	.00037	.48587	.40095	.00000
.536	600.300	-.23911	.11319	-.03491	-.04185	-.00882	.00028	.45634	.41104	.00000
.487	750.210	-.23855	.11225	-.03433	-.04103	-.00795	.00032	.45779	.42297	.00000
.251	800.970	-.23668	.11225	-.03431	-.03961	-.00766	.00031	.45706	.42322	.00000
	GRADIENT	.00000	.00000	.00000	.00000	.00000	.00000	.00000	.00000	.00000

RUN NO. 286/ 0 GRADIENT INTERVAL = -5.00/ 5.00

DLT-X	DLT-Z	CN	CA	CLM	CY	CYN	CBL	XCP/L	YCP/L	CPB
200.470	398.040	-.25989	.11889	-.02612	-.04700	-.00875	.00054	.48813	.42834	.00000
200.420	498.500	-.26033	.12309	-.02209	-.04502	-.00987	.00039	.49690	.40516	.00000
200.600	600.160	-.24789	.11407	-.03032	-.04250	-.00926	.00027	.47288	.40614	.00000
200.480	750.180	-.23789	.11239	-.03454	-.04183	-.00831	.00034	.45690	.41947	.00000
200.490	800.170	-.23706	.11250	-.03454	-.04124	-.00802	.00033	.45655	.42253	.00000
	GRADIENT	.00000	.00000	.00000	.00000	.00000	.00000	.00000	.00000	.00000

RUN NO. 287/ 0 GRADIENT INTERVAL = -5.00/ 5.00

DLT-X	DLT-Z	CN	CA	CLM	CY	CYN	CBL	XCP/L	YCP/L	CPB
400.470	401.070	-.24651	.11133	-.03585	-.04523	-.00795	.00054	.45674	.43556	.00000
400.440	500.580	-.25859	.11799	-.02742	-.04399	-.00870	.00042	.48425	.42020	.00000
400.550	600.180	-.25634	.12100	-.02479	-.03940	-.00947	.00043	.49079	.39044	.00000
400.600	750.170	-.23604	.11264	-.03514	-.04052	-.00821	.00033	.45432	.41684	.00000
400.560	800.180	-.23759	.11246	-.03479	-.04164	-.00835	.00035	.45606	.41815	.00000
	GRADIENT	.00000	.00000	.00000	.00000	.00000	.00000	.00000	.00000	.00000

AEDC VA422(IA17) ORB AND ET SEPARATING(ET DATA) (ATR035) (24 JUL 75)

REFERENCE DATA

SREF = 2690.0000 SQ.FT. XMRP = 1360.1000 IN. XT
LREF = 1290.3000 IN. YMRP = .0000 IN. YT
BREF = 1290.3000 IN. ZMRP = 416.4000 IN. ZT
SCALE = .0100

PARAMETRIC DATA

DLT-Y = .000 ALPHA = -5.000
BETA = 3.000 DLTALF = -15.000
DLTBTA = .000 MACH = 5.930
AILRON = .000 ELEVON = .000
GRID = 7.000

RUN NO. 291/ 0 GRADIENT INTERVAL = -5.00/ 5.00

DLT-X	DLT-Z	CN	CA	CLM	CY	CYN	CBL	XCP/L	YCP/L	CPB
.447	500.290	-.38740	.14185	-.01588	-.05243	-.00739	.00029	.52971	.45982	.00000
.495	604.150	-.38505	.13986	-.01666	-.04827	-.00824	.00022	.52811	.43910	.00000
.515	750.440	-.35938	.12885	-.03547	-.04849	-.00671	.00029	.48761	.46168	.00000
.875	804.040	-.34945	.12751	-.03557	-.04666	-.00634	.00031	.48722	.46343	.00000
	GRADIENT	.00000	.00000	.00000	.00000	.00000	.00000	.00000	.00000	.00000

RUN NO. 292/ 0 GRADIENT INTERVAL = -5.00/ 5.00

DLT-X	DLT-Z	CN	CA	CLM	CY	CYN	CBL	XCP/L	YCP/L	CPB
200.540	500.530	-.37473	.13241	-.02786	-.05437	-.00660	.00048	.50640	.47352	.00000
200.420	597.530	-.37862	.13582	-.02111	-.05171	-.00756	.00028	.51940	.45627	.00000
200.500	749.570	-.35832	.12574	-.03183	-.04799	-.00686	.00029	.49628	.45844	.00000
200.450	800.260	-.35005	.12698	-.03562	-.04811	-.00662	.00030	.48725	.46222	.00000
	GRADIENT	.00000	.00000	.00000	.00000	.00000	.00000	.00000	.00000	.00000

RUN NO. 293/ 0 GRADIENT INTERVAL = -5.00/ 5.00

DLT-X	DLT-Z	CN	CA	CLM	CY	CYN	CBL	XCP/L	YCP/L	CPB
400.470	501.260	-.35706	.12331	-.04110	-.05257	-.00602	.00064	.47792	.47838	.00000
400.550	600.550	-.37029	.13131	-.02876	-.05105	-.00668	.00045	.50407	.46687	.00000
400.420	750.320	-.36610	.13369	-.02703	-.04541	-.00695	.00023	.50676	.45137	.00000
400.430	800.290	-.35696	.12735	-.03133	-.04723	-.00691	.00028	.49702	.45617	.00000
	GRADIENT	.00000	.00000	.00000	.00000	.00000	.00000	.00000	.00000	.00000

AEDC VA422(IA17) ORB AND ET SEPARATING(ET DATA) (ATR037) (24 JUL 75)

REFERENCE DATA

SREF = 2690.0000 SQ.FT. XMRP = 1360.1000 IN. XT
LREF = 1290.3000 IN. YMRP = .0000 IN. YT
BREF = 1290.3000 IN. ZMRP = 416.4000 IN. ZT
SCALE = .0100

PARAMETRIC DATA

DLT-Y = .000 ALPHA = -5.000
BETA = 3.000 DLTALF = -20.000
DLTBTA = .000 MACH = 5.930
AILRON = .000 ELEVON = .000
GRID = 7.000

RUN NO. 298/ 0 GRADIENT INTERVAL = -5.00/ 5.00

DLT-X	DLT-Z	CN	CA	CLM	CY	CYN	CBL	XCP/L	YCP/L	CPB
.489	804.110	-.50218	.14364	-.02395	-.05355	-.00504	.00028	.52502	.49265	.00000
.491	900.920	-.48266	.14598	-.03253	-.05214	-.00490	.00045	.51125	.49271	.00000
.509	1000.400	-.48270	.14649	-.03209	-.05219	-.00493	.00047	.51190	.49237	.00000
	GRADIENT	.00000	.00000	.00000	.00000	.00000	.00000	.00000	.00000	.00000

RUN NO. 294/ 0 GRADIENT INTERVAL = -5.00/ 5.00

DLT-X	DLT-Z	CN	CA	CLM	CY	CYN	CBL	XCP/L	YCP/L	CPB
200.370	753.760	-.57254	.17905	.01567	-.05041	-.00666	.00158	.57747	.46599	.00000
200.420	802.290	-.51119	.15227	-.01759	-.05262	-.00571	.00035	.53430	.48257	.00000
200.510	900.410	-.48552	.14537	-.03032	-.05158	-.00512	.00040	.51472	.48903	.00000
200.500	1000.400	-.48225	.14664	-.03247	-.05248	-.00528	.00047	.51130	.48810	.00000
	GRADIENT	.00000	.00000	.00000	.00000	.00000	.00000	.00000	.00000	.00000

RUN NO. 295/ 0 GRADIENT INTERVAL = -5.00/ 5.00

DLT-X	DLT-Z	CN	CA	CLM	CY	CYN	CBL	XCP/L	YCP/L	CPB
400.450	746.020	-.56173	.17587	.00901	-.05283	-.00679	.00115	.56954	.46857	.00000
400.360	799.890	-.51703	.15945	-.01521	-.05320	-.00727	.00056	.53778	.46284	.00000
400.360	900.010	-.49829	.14814	-.02407	-.05411	-.00554	.00033	.52459	.48676	.00000
400.490	1000.500	-.48262	.14517	-.03265	-.05132	-.00538	.00041	.51107	.48508	.00000
	GRADIENT	.00000	.00000	.00000	.00000	.00000	.00000	.00000	.00000	.00000

AEDC VA422(IA17) ORB AND ET SEPARATING(ET DATA) (ATR038) (24 JUL 75)

REFERENCE DATA

SREF = 2890.0000 SQ.FT. XMRP = 1360.1000 IN. XT
LREF = 1290.3000 IN. YMRP = .0000 IN. YT
BREF = 1290.3000 IN. ZMRP = 416.4000 IN. ZT
SCALE = .0100

PARAMETRIC DATA

DLT-Y = .000 ALPHA = -10.000
BETA = 3.000 DLTALF = .000
DLTBTA = .000 MACH = 5.930
AILRON = .000 ELEVON = .000
GRID = 8.000

RUN NO. 318/ 0 GRADIENT INTERVAL = -5.00/ 5.00

DLT-X	DLT-Z	CN	CA	CLM	CY	CYN	CBL	XCP/L	YCP/L	CPB
.534	31.523	-.17554	.10701	-.02792	-.04120	-.00952	.00055	.44723	.39691	.00000
.521	102.800	-.16673	.10575	-.02586	-.04205	-.00988	.00046	.44998	.39419	.00000
.620	202.240	-.16259	.10459	-.02411	-.03991	-.01006	.00051	.45476	.38219	.00000
.534	300.520	-.16473	.11103	-.01849	-.03665	-.01058	.00039	.47991	.35660	.00000
.609	400.180	-.15138	.10210	-.02562	-.03572	-.00967	.00031	.44011	.36914	.00000
.574	500.320	-.14757	.10215	-.02727	-.03578	-.00926	.00030	.42922	.37737	.00000
	GRADIENT	.00000	.00000	.00000	.00000	.00000	.00000	.00000	.00000	.00000

RUN NO. 319/ 0 GRADIENT INTERVAL = -5.00/ 5.00

DLT-X	DLT-Z	CN	CA	CLM	CY	CYN	CBL	XCP/L	YCP/L	CPB
200.560	31.849	-.16842	.10116	-.03621	-.04348	-.00998	.00062	.39983	.39796	.00000
200.430	100.240	-.16146	.10535	-.02809	-.04230	-.01014	.00044	.43679	.39085	.00000
200.510	197.360	-.15304	.10231	-.02940	-.04275	-.01014	.00048	.42411	.39267	.00000
200.480	298.500	-.16012	.10625	-.02277	-.03903	-.01027	.00046	.45901	.37442	.00000
200.550	399.830	-.16200	.11047	-.01953	-.03539	-.01023	.00040	.47414	.35643	.00000
200.470	500.200	-.14917	.10200	-.02699	-.03678	-.00976	.00029	.43193	.37302	.00000
	GRADIENT	.00000	.00000	.00000	.00000	.00000	.00000	.00000	.00000	.00000

ORIGINAL PAGE IS OF POOR QUALITY

AEDC VA422(IA17) ORB AND ET SEPARATING(ET DATA) (ATR039) (24 JUL 75)

REFERENCE DATA

SREF = 2890.0000 SQ.FT. XMRP = 1380.1000 IN. XT
LREF = 1290.3000 IN. YMRP = .0000 IN. YT
BREF = 1290.3000 IN. ZMRP = 416.4000 IN. ZT
SCALE = .0100

PARAMETRIC DATA

DLT-Y = .000 ALPHA = -10.000
BETA = 3.000 DLTALF = -5.000
DLTBTA = .000 MACH = 5.930
AILRON = .000 ELEVON = .000
GRID = 8.000

RUN NO. 322/ 0 GRADIENT INTERVAL = -5.00/ 5.00

DLT-X	DLT-Z	CN	CA	CLM	CY	CYN	CBL	XCP/L	YCP/L	CPB
.433	200.410	-.26580	.11909	-.02818	-.04693	-.00837	.00038	.48952	.43369	.00000
.501	302.270	-.25220	.11259	-.03224	-.04465	-.00775	.00052	.46927	.43711	.00000
.454	400.420	-.25998	.12201	-.02254	-.04161	-.00854	.00042	.49778	.41495	.00000
.437	500.260	-.24843	.11459	-.02882	-.04057	-.00805	.00031	.47730	.41972	.00000
.527	600.260	-.23862	.11212	-.03406	-.04083	-.00779	.00031	.45863	.42509	.00000
	GRADIENT	.00000	.00000	.00000	.00000	.00000	.00000	.00000	.00000	.00000

RUN NO. 323/ 0 GRADIENT INTERVAL = -5.00/ 5.00

DLT-X	DLT-Z	CN	CA	CLM	CY	CYN	CBL	XCP/L	YCP/L	CPB
200.430	198.790	-.26427	.11981	-.02797	-.04815	-.00933	.00031	.48440	.42294	.00000
200.490	296.640	-.23897	.10733	-.04125	-.04760	-.00805	.00051	.43774	.44019	.00000
200.440	398.710	-.25272	.11401	-.03021	-.04447	-.00795	.00050	.47482	.43353	.00000
200.400	499.940	-.25917	.12181	-.02271	-.04148	-.00921	.00046	.49711	.40315	.00000
200.470	600.190	-.24578	.11246	-.03096	-.04133	-.00827	.00030	.47032	.41848	.00000
	GRADIENT	.00000	.00000	.00000	.00000	.00000	.00000	.00000	.00000	.00000

AEDC VA422(IA17) ORB AND ET SEPARATING(ET DATA) (ATR040) (24 JUL 75)

REFERENCE DATA

SREF = 2890.0000 SQ.FT. XMRP = 1380.1000 IN. XT
LREF = 1290.3000 IN. YMRP = .0000 IN. YT
BREF = 1290.3000 IN. ZMRP = 416.4000 IN. ZT
SCALE = .0100

PARAMETRIC DATA

DLT-Y = .000 ALPHA = -10.000
BETA = 3.000 DLTALF = -10.000
DLTBTA = .000 MACH = 5.930
AILRON = .000 ELEVON = .000
GRID = 8.000

RUN NO. 324/ 0 GRADIENT INTERVAL = -5.00/ 5.00

DLT-X	DLT-Z	CN	CA	CLM	CY	CYN	CBL	XCP/L	YCP/L	CPB
.554	403.400	-.36137	.12519	-.03603	-.05035	-.00518	.00060	.48868	.48641	.00000
.414	501.450	-.37681	.13766	-.02219	-.04879	-.00603	.00038	.51717	.47198	.00000
.381	600.610	-.36682	.13329	-.02578	-.04610	-.00650	.00028	.50928	.45979	.00000
.473	700.240	-.35110	.12568	-.03460	-.04641	-.00631	.00022	.48950	.46331	.00000
.581	800.280	-.34980	.12753	-.03448	-.04758	-.00681	.00029	.48947	.48121	.00000
	GRADIENT	.00000	.00000	.00000	.00000	.00000	.00000	.00000	.00000	.00000

AEDC VA422(IA17) ORB AND ET SEPARATING(ET DATA) (ATR040) (24 JUL 75)

REFERENCE DATA

SREF = 2690.0000 SQ.FT. XMRP = 1360.1000 IN. XT
LREF = 1290.3000 IN. YMRP = .0000 IN. YT
BREF = 1290.3000 IN. ZMRP = 416.4000 IN. ZT
SCALE = .0100

PARAMETRIC DATA

DLT-Y = .000 ALPHA = -10.000
BETA = 3.000 DLTALF = -10.000
DLTBTA = .000 MACH = 5.930
AILRON = .000 ELEVON = .000
GRID = 8.000

RUN NO. 328/ 0 GRADIENT INTERVAL = -5.00/ 5.00

DLT-X	DLT-Z	CN	CA	CLM	CY	CYN	CBL	XCP/L	YCP/L	CPB
200.500	398.110	-.34153	.11894	-.04863	-.05292	-.00563	.00054	.45886	.48397	.00000
200.400	498.750	-.36130	.12685	-.03392	-.05106	-.00572	.00059	.49275	.48010	.00000
200.350	599.990	-.37591	.13865	-.02114	-.04707	-.00741	.00044	.51904	.44842	.00000
200.410	700.140	-.36311	.13031	-.02804	-.04536	-.00662	.00021	.50439	.45637	.00000
200.530	800.280	-.34965	.12648	-.03520	-.04729	-.00669	.00028	.48801	.45946	.00000
	GRADIENT	.00000	.00000	.00000	.00000	.00000	.00000	.00000	.00000	.00000

RUN NO. 326/ 0 GRADIENT INTERVAL = -5.00/ 5.00

DLT-X	DLT-Z	CN	CA	CLM	CY	CYN	CBL	XCP/L	YCP/L	CPB
400.480	401.260	-.32783	.11524	-.05813	-.05270	-.00517	.00059	.43446	.48978	.00000
400.500	500.460	-.35065	.12160	-.04362	-.05013	-.00543	.00058	.47143	.48270	.00000
400.560	600.900	-.36829	.13089	-.02927	-.04779	-.00576	.00046	.50282	.47415	.00000
400.310	700.430	-.37323	.13756	-.02212	-.04521	-.00784	.00034	.51694	.43714	.00000
400.470	800.140	-.35828	.12736	-.03050	-.04711	-.00678	.00023	.49887	.45775	.00000
	GRADIENT	.00000	.00000	.00000	.00000	.00000	.00000	.00000	.00000	.00000

AEDC VA422(IA17) ORB AND ET SEPARATING(ET DATA) (ATR041) (24 JUL 75)

REFERENCE DATA

SREF = 2690.0000 SQ.FT. XMRP = 1360.1000 IN. XT
LREF = 1290.3000 IN. YMRP = .0000 IN. YT
BREF = 1290.3000 IN. ZMRP = 416.4000 IN. ZT
SCALE = .0100

PARAMETRIC DATA

DLT-Y = .000 ALPHA = -10.000
BETA = 3.000 DLTALF = -15.000
DLTBTA = .000 MACH = 5.930
AILRON = .000 ELEVON = .000
GRID = 8.000

RUN NO. 330/ 0 GRADIENT INTERVAL = -5.00/ 5.00

DLT-X	DLT-Z	CN	CA	CLM	CY	CYN	CBL	XCP/L	YCP/L	CPB
.493	502.590	-.48527	.12943	-.04018	-.05847	-.00276	.00094	.50050	.52538	.00000
.529	605.150	-.53512	.15823	-.01028	-.05533	-.00353	.00118	.54492	.51378	.00000
.450	702.660	-.51126	.15329	-.01727	-.05106	-.00536	.00047	.53474	.48506	.00000
1.771	804.360	-.48798	.14513	-.02851	-.05177	-.00509	.00042	.51752	.48962	.00000
	GRADIENT	.00000	.00000	.00000	.00000	.00000	.00000	.00000	.00000	.00000

ORIGINAL PAGE IS OF POOR QUALITY

AEDC VA422(IA17) ORB AND ET SEPARATING(ET DATA) (ATR041) (24 JUL 75)

REFERENCE DATA

SREF = 2690.0000 SQ.FT. XMRP = 1360.1000 IN. XT
LREF = 1290.3000 IN. YMRP = .0000 IN. YT
BREF = 1290.3000 IN. ZMRP = 416.4000 IN. ZT
SCALE = .0100

PARAMETRIC DATA

DLT-Y = .000 ALPHA = -10.000
BETA = 3.000 DLTALF = -15.000
DLTBTA = .000 MACH = 5.930
AILRON = .000 ELEVON = .000
GRID = 8.000

RUN NO. 331/ 0 GRADIENT INTERVAL = -5.00/ 5.00

DLT-X	DLT-Z	CN	CA	CLM	CY	CYN	CBL	XCP/L	YCP/L	CPB
200.470	500.480	-.45875	.12584	-.05675	-.06106	-.00306	.00076	.47192	.52328	.00000
200.410	600.510	-.51328	.15255	-.02297	-.05771	-.00336	.00112	.52708	.51765	.00000
200.300	698.800	-.52243	.15946	-.01120	-.05382	-.00571	.00051	.54336	.48422	.00000
200.440	799.140	-.50127	.15268	-.02192	-.05316	-.00563	.00036	.52779	.48431	.00000
	GRADIENT	.00000	.00000	.00000	.00000	.00000	.00000	.00000	.00000	.00000

RUN NO. 332/ 0 GRADIENT INTERVAL = -5.00/ 5.00

DLT-X	DLT-Z	CN	CA	CLM	CY	CYN	CBL	XCP/L	YCP/L	CPB
400.560	501.710	-.44068	.12433	-.06862	-.05965	-.00289	.00064	.44955	.52449	.00000
400.480	600.790	-.48057	.13856	-.04363	-.05643	-.00269	.00080	.49492	.52507	.00000
400.490	700.750	-.50150	.14655	-.02750	-.05329	-.00370	.00065	.52002	.50980	.00000
400.430	800.540	-.50776	.15727	-.01812	-.04912	-.00636	.00047	.53340	.46785	.00000
	GRADIENT	.00000	.00000	.00000	.00000	.00000	.00000	.00000	.00000	.00000

AEDC VA422(IA17) ORB AND ET SEPARATING(ET DATA) (ATR042) (24 JUL 75)

REFERENCE DATA

SREF = 2690.0000 SQ.FT. XMRP = 1350.1000 IN. XT
LREF = 1290.3000 IN. YMRP = .0000 IN. YT
BREF = 1290.3000 IN. ZMRP = 416.4000 IN. ZT
SCALE = .0100

PARAMETRIC DATA

DLT-Y = .000 ALPHA = -10.000
BETA = .000 DLTALF = .000
DLTBTA = .000 MACH = 5.930
AILRON = .000 ELEVON = .000
GRID = 9.000

RUN NO. 344/ 0 GRADIENT INTERVAL = -5.00/ 5.00

DLT-X	DLT-Z	CN	CA	CLM	CY	CYN	CBL	XCP/L	YCP/L	CPB
.511	31.142	-.17024	.10597	-.03155	.00631	.00097	.00035	.42887	.45075	.00000
.512	102.880	-.18395	.10527	-.02833	.00571	.00100	.00015	.43760	.43587	.00000
.587	202.290	-.15807	.10421	-.02774	.00397	.00055	.00010	.43576	.00000	.00000
.539	300.620	-.16263	.10872	-.02088	.00473	.00013	.00010	.46866	.00000	.00000
.524	400.190	-.14878	.09944	-.02760	.00397	.00072	.00007	.42873	.00000	.00000
.424	500.290	-.14593	.09988	-.02864	.00411	.00071	.00006	.42125	.00000	.00000
	GRADIENT	.00000	.00000	.00000	.00000	.00000	.00000	.00000	.00000	.00000

AEDC VA422(IA17) ORB AND ET SEPARATING(ET DATA) (ATR042) (24 JUL 75)

REFERENCE DATA

SREF = 2690.0000 SQ.FT. XMRP = 1360.1000 IN. XT
LREF = 1290.3000 IN. YMRP = .0000 IN. YT
BREF = 1290.3000 IN. ZMRP = 416.4000 IN. ZT
SCALE = .0100

PARAMETRIC DATA

DLT-Y = .000 ALPHA = -10.000
BETA = .000 DLTALF = .000
DLTBTA = .000 MACH = 5.930
AILRON = .000 ELEVON = .000
GRID = 9.000

RUN NO. 345/ 0 GRADIENT INTERVAL = -5.00/ 5.00

DLT-X	DLT-Z	CN	CA	CLM	CY	CYN	CBL	XCP/L	YCP/L	CPB
200.500	32.024	-.16625	.10259	-.03913	.00847	.00153	.00036	.39393	.43201	.00000
200.420	100.180	-.15779	.10472	-.03056	.00477	.00085	.00017	.42303	.00000	.00000
200.470	197.440	-.15018	.10261	-.03242	.00348	.00060	.00010	.40750	.00000	.00000
200.490	298.420	-.15939	.10515	-.02536	.00482	.00061	.00008	.44718	.00000	.00000
200.410	399.780	-.15988	.10693	-.02157	.00514	-.00007	.00016	.46411	.00000	.00000
200.410	500.180	-.14578	.09909	-.02861	.00422	.00079	.00005	.42122	.00000	.00000
	GRADIENT	.00000	.00000	.00000	.00000	.00000	.00000	.00000	.00000	.00000

RUN NO. 346/ 0 GRADIENT INTERVAL = -5.00/ 5.00

DLT-X	DLT-Z	CN	CA	CLM	CY	CYN	CBL	XCP/L	YCP/L	CPB
400.370	32.865	-.15390	.09998	-.04298	.00605	.00083	.00021	.36325	.46229	.00000
400.460	103.410	-.15922	.10589	-.03209	.00412	.00074	.00009	.41752	.00000	.00000
400.470	201.580	-.14830	.10066	-.03751	.00464	.00075	.00016	.38162	.00000	.00000
400.490	300.600	-.15486	.10103	-.03087	.00426	.00082	.00011	.41909	.00000	.00000
400.420	400.250	-.15993	.10528	-.02354	.00504	.00067	.00005	.45550	.00000	.00000
400.400	500.180	-.15468	.10317	-.02376	.00471	.00023	.00013	.45102	.00000	.00000
	GRADIENT	.00000	.00000	.00000	.00000	.00000	.00000	.00000	.00000	.00000

AEDC VA422(IA17) ORB AND ET SEPARATING(ET DATA) (ATR043) (24 JUL 75)

REFERENCE DATA

SREF = 2690.0000 SQ.FT. XMRP = 1360.1000 IN. XT
LREF = 1290.3000 IN. YMRP = .0000 IN. YT
BREF = 1290.3000 IN. ZMRP = 416.4000 IN. ZT
SCALE = .0100

PARAMETRIC DATA

DLT-Y = .000 ALPHA = -10.000
BETA = .000 DLTALF = -5.000
DLTBTA = .000 MACH = 5.930
AILRON = .000 ELEVON = .000
GRID = 9.000

RUN NO. 350/ 0 GRADIENT INTERVAL = -5.00/ 5.00

DLT-X	DLT-Z	CN	CA	CLM	CY	CYN	CBL	XCP/L	YCP/L	CPB
.391	205.110	-.26368	.11826	-.03062	.00532	.00088	.00028	.47721	.00000	.00000
.476	302.410	-.25031	.11215	-.03588	.00560	.00136	.00023	.45821	.00000	.00000
.479	400.540	-.25811	.12216	-.02476	.00747	-.00002	.00033	.49133	.56019	.00000
.419	500.130	-.24701	.11404	-.02986	.00543	.00028	.00023	.47389	.00000	.00000
.634	600.380	-.23535	.11031	-.03590	.00468	.00083	.00019	.45179	.00000	.00000
	GRADIENT	.00000	.00000	.00000	.00000	.00000	.00000	.00000	.00000	.00000

RUN NO. 351/ 0 GRADIENT INTERVAL = -5.00/ 5.00

DLT-X	DLT-Z	CN	CA	CLM	CY	CYN	CBL	XCP/L	YCP/L	CPB
200.380	198.920	-.26531	.12108	-.02961	.00688	.00054	.00034	.48036	.50394	.00000
200.330	296.510	-.23648	.10765	-.04447	.00521	.00154	.00022	.42695	.00000	.00000
200.430	398.650	-.24904	.11301	-.03290	.00537	.00095	.00022	.46605	.00000	.00000
200.450	499.940	-.25544	.11913	-.02509	.00662	-.00007	.00038	.48971	.56605	.00000
200.430	600.170	-.24142	.11024	-.03268	.00596	.00083	.00020	.46377	.46139	.00000
	GRADIENT	.00000	.00000	.00000	.00000	.00000	.00000	.00000	.00000	.00000

AEDC VA422(IA17) ORB AND ET SEPARATING(ET DATA) (ATR044) (24 JUL 75)

REFERENCE DATA

SREF = 2690.0000 SQ.FT. XMRP = 1360.1000 IN. XT
LREF = 1290.3000 IN. YMRP = .0000 IN. YT
BREF = 1290.3000 IN. ZMRP = 416.4000 IN. ZT
SCALE = .0100

PARAMETRIC DATA

DLT-Y = .000 ALPHA = -10.000
BETA = .000 DLTALF = -10.000
DLTBTA = .000 MACH = 5.930
AILRON = .000 ELEVON = .000
GRID = 9.000

RUN NO. 352/ 0 GRADIENT INTERVAL = -5.00/ 5.00

DLT-X	DLT-Z	CN	CA	CLM	CY	CYN	CBL	XCP/L	YCP/L	CPB
.449	403.090	-.35845	.12548	-.03917	.00594	.00085	.00040	.48200	.00000	.00000
.480	501.870	-.37592	.13921	-.02258	.00903	-.00019	.00033	.51641	.57307	.00000
.379	600.480	-.36664	.13581	-.02555	.00777	-.00032	.00035	.50964	.58684	.00000
.535	700.260	-.34663	.12511	-.03807	.00923	.00059	.00031	.48565	.51343	.00000
.688	800.580	-.34391	.12668	-.03599	.00850	.00028	.00034	.48523	.53568	.00000
	GRADIENT	.00000	.00000	.00000	.00000	.00000	.00000	.00000	.00000	.00000

AEDC VA422(IA17) ORB AND ET SEPARATING(ET DATA) (ATR044) (24 JUL 75)

REFERENCE DATA

SREF = 2690.0000 SQ.FT. XMRP = 1360.1000 IN. XT
LREF = 1290.3000 IN. YMRP = .0000 IN. YT
BREF = 1290.3000 IN. ZMRP = 416.4000 IN. ZT
SCALE = .0100

PARAMETRIC DATA

DLT-Y = .000 ALPHA = -10.000
BETA = .000 DLTALF = -10.000
DLTBTA = .000 MACH = 5.930
AILRON = .000 ELEVON = .000
GRID = 9.000

RUN NO. 353/ 0 GRADIENT INTERVAL = -5.00/ 5.00

DLT-X	DLT-Z	CN	CA	CLM	CY	CYN	CBL	XCP/L	YCP/L	CPB
200.420	398.190	-.34018	.11950	-.05067	.00560	.00115	.00036	.45427	.00000	.00000
200.420	498.600	-.35676	.12700	-.03634	.00606	.00103	.00036	.48718	.00000	.00000
200.240	600.100	-.37204	.13931	-.02225	.00840	-.00048	.00040	.51657	.59824	.00000
200.460	700.150	-.35973	.13199	-.02894	.00831	-.00017	.00031	.50214	.57298	.00000
200.440	800.270	-.34528	.12605	-.03685	.00775	.00032	.00033	.48379	.52981	.00000
	GRADIENT	.00000	.00000	.00000	.00000	.00000	.00000	.00000	.00000	.00000

RUN NO. 354/ 0 GRADIENT INTERVAL = -5.00/ 5.00

DLT-X	DLT-Z	CN	CA	CLM	CY	CYN	CBL	XCP/L	YCP/L	CPB
400.430	401.250	-.32248	.11343	-.06123	.00607	.00172	.00035	.42569	.00000	.00000
400.530	500.610	-.34485	.12031	-.04649	.00552	.00095	.00037	.46416	.00000	.00000
400.420	600.670	-.36173	.12831	-.03249	.00746	.00102	.00032	.49559	.46296	.00000
400.360	700.360	-.36870	.13599	-.02388	.00916	-.00056	.00055	.51310	.60108	.00000
400.440	800.080	-.35396	.12776	-.03183	.00777	.00001	.00033	.49551	.55756	.00000
	GRADIENT	.00000	.00000	.00000	.00000	.00000	.00000	.00000	.00000	.00000

AEDC VA422(IA17) ORB AND ET SEPARATING(ET DATA) (ATR045) (24 JUL 75)

REFERENCE DATA

SREF = 2690.0000 SQ.FT. XMRP = 1360.1000 IN. XT
LREF = 1290.3000 IN. YMRP = .0000 IN. YT
BREF = 1290.3000 IN. ZMRP = 416.4000 IN. ZT
SCALE = .0100

PARAMETRIC DATA

DLT-Y = .000 ALPHA = -10.000
BETA = .000 DLTALF = -15.000
DLTBTA = .000 MACH = 5.930
AILRON = .000 ELEVON = .000
GRID = 9.000

RUN NO. 358/ 0 GRADIENT INTERVAL = -5.00/ 5.00

DLT-X	DLT-Z	CN	CA	CLM	CY	CYN	CBL	XCP/L	YCP/L	CPB
.384	502.390	-.48024	.12853	-.04439	.00702	.00198	.00078	.49377	.00000	.00000
.473	604.810	-.53068	.15819	-.01344	.00955	.00069	.00111	.54064	.50798	.00000
.410	703.070	-.51289	.15604	-.01525	.00955	-.00025	.00050	.53757	.57660	.00000
1.533	804.250	-.48357	.14527	-.02996	.00981	-.00002	.00051	.51506	.55948	.00000
	GRADIENT	.00000	.00000	.00000	.00000	.00000	.00000	.00000	.00000	.00000

ORIGINAL PAGE IS OF POOR QUALITY

AEDC VA422(IA17) ORB AND ET SEPARATING(ET DATA) (ATR045) (24 JUL 75)

REFERENCE DATA

SREF = 2690.0000 SQ.FT. XMRP = 1360.1000 IN. XT
LREF = 1290.3000 IN. YMRP = .0000 IN. YT
BREF = 1290.3000 IN. ZMRP = 416.4000 IN. ZT
SCALE = .0100

PARAMETRIC DATA

DLT-Y = .000 ALPHA = -10.000
BETA = .000 DLTALF = -15.000
DLTBTA = .000 MACH = 5.930
AILRON = .000 ELEVON = .000
GRID = 9.000

RUN NO. 359/ 0 GRADIENT INTERVAL = -6.00/ 5.00

DLT-X	DLT-Z	CN	CA	CLM	CY	CYN	CBL	XCP/L	YCP/L	CPB
200.290	500.460	-.45360	.12219	-.06136	.00837	.00181	.00080	.46384	.40725	.00000
200.380	600.610	-.50607	.15208	-.02698	.00875	.00144	.00092	.52109	.44324	.00000
200.380	698.740	-.51450	.15962	-.01389	.01013	-.00029	.00042	.53948	.57832	.00000
200.500	799.270	-.49665	.15355	-.02313	.01014	-.00019	.00055	.52580	.57144	.00000
	GRADIENT	.00000	.00000	.00000	.00000	.00000	.00000	.00000	.00000	.00000

RUN NO. 360/ 0 GRADIENT INTERVAL = -5.00/ 5.00

DLT-X	DLT-Z	CN	CA	CLM	CY	CYN	CBL	XCP/L	YCP/L	CPB
400.460	501.840	-.43554	.12243	-.07183	.00683	.00191	.00063	.44312	.00000	.00000
400.420	600.750	-.46695	.13463	-.05016	.00739	.00144	.00054	.48329	.42258	.00000
400.380	700.840	-.49097	.14679	-.03172	.00892	.00122	.00055	.51321	.46292	.00000
400.250	800.330	-.50147	.15786	-.02032	.01092	-.00069	.00075	.53004	.60263	.00000
	GRADIENT	.00000	.00000	.00000	.00000	.00000	.00000	.00000	.00000	.00000

AEDC VA422(IA17) ORB AND ET SEPARATING(ET DATA) (ATR046) (24 JUL 75)

REFERENCE DATA

SREF = 2690.0000 SQ.FT. XMRP = 1360.1000 IN. XT
LREF = 1290.3000 IN. YMRP = .0000 IN. YT
BREF = 1290.3000 IN. ZMRP = 416.4000 IN. ZT
SCALE = .0100

PARAMETRIC DATA

DLT-Y = .000 ALPHA = -10.000
BETA = .000 DLTALF = .000
DLTBTA = .000 MACH = 5.930
AILRON = .000 ELEVON = -20.000
GRID = 10.000

RUN NO. 387/ 0 GRADIENT INTERVAL = -5.00/ 5.00

DLT-X	DLT-Z	CN	CA	CLM	CY	CYN	CBL	XCP/L	YCP/L	CPB
.503	31.177	-.16890	.10469	-.03153	.00815	.00094	.00036	.42791	.45161	.00000
.526	102.800	-.16282	.10468	-.02807	.00412	.00054	.00015	.43790	.00000	.00000
.580	202.380	-.15787	.10425	-.02757	.00316	.00044	.00009	.43635	.00000	.00000
.521	300.810	-.16273	.10919	-.02084	.00397	.00000	.00008	.46886	.00000	.00000
.600	400.150	-.14871	.09952	-.02740	.00359	.00046	.00008	.42961	.00000	.00000
.450	500.290	-.14546	.09983	-.02848	.00246	.00041	.00007	.42155	.00000	.00000
	GRADIENT	.00000	.00000	.00000	.00000	.00000	.00000	.00000	.00000	.00000

AEDC VA422(IA17) ORB AND ET SEPARATING(ET DATA) (ATR046) (24 JUL 75)

REFERENCE DATA

SREF = 2690.0000 SQ.FT. XMRP = 1360.1000 IN. XT
LREF = 1290.3000 IN. YMRP = .0000 IN. YT
BREF = 1290.3000 IN. ZMRP = 416.4000 IN. ZT
SCALE = .0100

PARAMETRIC DATA

DLT-Y = .000 ALPHA = -10.000
BETA = .000 DLTALF = .000
DLTBTA = .000 MACH = 5.930
AILRON = .000 ELEVON = -20.000
GRID = 10.000

RUN NO. 388/ 0 GRADIENT INTERVAL = -5.00/ 5.00

DLT-X	DLT-Z	CN	CA	CLM	CY	CYN	CBL	XCP/L	YCP/L	CPB
400.420	31.970	-.15377	.09904	-.04356	.00528	.00051	.00022	.36044	.49139	.00000
400.450	100.180	-.15405	.10491	-.03221	.00257	.00034	.00008	.41227	.00000	.00000
400.400	196.840	-.14192	.09942	-.02763	.00357	.00062	.00018	.37310	.00000	.00000
400.410	298.740	-.15199	.10140	-.03077	.00261	.00038	.00011	.41691	.00000	.00000
400.400	399.860	-.15849	.10507	-.02337	.00256	.00024	.00006	.45533	.00000	.00000
400.410	500.150	-.15510	.10386	-.02343	.00388	.00012	.00014	.45279	.00000	.00000
	GRADIENT	.00000	.00000	.00000	.00000	.00000	.00000	.00000	.00000	.00000

AEDC VA422(IA17) ORB AND ET SEPARATING(ET DATA) (ATR047) (24 JUL 75)

REFERENCE DATA

SREF = 2690.0000 SQ.FT. XMRP = 1360.1000 IN. XT
LREF = 1290.3000 IN. YMRP = .0000 IN. YT
BREF = 1290.3000 IN. ZMRP = 416.4000 IN. ZT
SCALE = .0100

PARAMETRIC DATA

DLT-Y = .000 ALPHA = -10.000
BETA = .000 DLTALF = -10.000
DLTBTA = .000 MACH = 5.930
AILRON = .000 ELEVON = -20.000
GRID = 10.000

RUN NO. 389/ 0 GRADIENT INTERVAL = -5.00/ 5.00

DLT-X	DLT-Z	CN	CA	CLM	CY	CYN	CBL	XCP/L	YCP/L	CPB
.577	403.390	-.35629	.12521	-.03981	.00698	.00145	.00040	.48027	.41316	.00000
.400	501.670	-.37327	.13991	-.02333	.00875	-.00008	.00027	.51468	.56507	.00000
.477	600.480	-.36460	.13566	-.02532	.00631	-.00058	.00036	.50983	.00000	.00000
.434	700.320	-.34658	.12629	-.03570	.00665	.00016	.00030	.48638	.54114	.00000
.552	800.280	-.34467	.12717	-.03575	.00615	-.00003	.00033	.48587	.00000	.00000
	GRADIENT	.00000	.00000	.00000	.00000	.00000	.00000	.00000	.00000	.00000

RUN NO. 390/ 0 GRADIENT INTERVAL = -5.00/ 5.00

DLT-X	DLT-Z	CN	CA	CLM	CY	CYN	CBL	XCP/L	YCP/L	CPB
400.480	397.260	-.32156	.11427	-.06140	.00501	.00133	.00032	.42493	.00000	.00000
400.430	499.340	-.34065	.12009	-.04656	.00498	.00099	.00036	.46286	.00000	.00000
400.430	600.210	-.35989	.12857	-.03213	.00570	.00079	.00031	.49596	.00000	.00000
400.320	700.130	-.36675	.13683	-.02365	.00783	-.00056	.00050	.51328	.60790	.00000
400.480	800.160	-.35348	.12739	-.03154	.00766	.00022	.00031	.49600	.53849	.00000
	GRADIENT	.00000	.00000	.00000	.00000	.00000	.00000	.00000	.00000	.00000

ORIGINAL PAGE IS OF POOR QUALITY

AEDC VA422(IA17) ORB AND ET SEPARATING(ET DATA) (ATR048) (24 JUL 75)

REFERENCE DATA

SREF = 2690.0000 SQ.FT. XMRP = 1360.1000 IN. XT
LREF = 1290.3000 IN. YMRP = .0000 IN. YT
BREF = 1290.3000 IN. ZMRP = 416.4000 IN. ZT
SCALE = .0100

PARAMETRIC DATA

DLT-Y = .000 ALPHA = -5.000
BETA = .000 DLTALF = .000
DLTBTA = .000 MACH = 5.930
AILRON = .000 ELEVON = -20.000
GRID = 11.000

RUN NO. 398/ 0 GRADIENT INTERVAL = -5.00/ 5.00

DLT-X	DLT-Z	CN	CA	CLM	CY	CYN	CBL	XCP/L	YCP/L	CPB
.570	19.256	-.09687	.09515	-.01482	.00471	.00060	.00033	.45150	.00000	.00000
.547	101.610	-.09132	.09705	-.01072	.00484	.00017	.00013	.47631	.53325	.00000
.505	201.920	-.08235	.10044	-.00808	.00272	.00024	.00005	.48978	.00000	.00000
.607	301.350	-.07655	.09658	-.01374	.00250	.00017	.00007	.43296	.00000	.00000
.562	400.190	-.07216	.09588	-.01713	.00204	.00022	.00006	.39247	.00000	.00000
.635	500.230	-.07449	.09441	-.01830	.00212	-.00003	.00005	.38666	.00000	.00000
.571	600.220	-.07330	.09283	-.01733	.00219	-.00000	.00004	.39319	.00000	.00000
	GRADIENT	.00000	.00000	.00000	.00000	.00000	.00000	.00000	.00000	.00000

RUN NO. 397/ 0 GRADIENT INTERVAL = -5.00/ 5.00

DLT-X	DLT-Z	CN	CA	CLM	CY	CYN	CBL	XCP/L	YCP/L	CPB
400.480	20.133	-.09658	.09429	-.02845	.00553	.00046	.00021	.35255	.50009	.00000
400.460	100.170	-.09293	.09651	-.01309	.00355	.00069	.00008	.45991	.00000	.00000
400.500	197.570	-.07927	.09613	-.01288	.00299	.00024	.00005	.44487	.00000	.00000
400.450	298.050	-.08032	.09972	-.00974	.00224	.00004	.00009	.47364	.00000	.00000
400.400	399.980	-.07912	.09951	-.01315	.00436	.00029	.00008	.44224	.00000	.00000
400.490	500.190	-.07257	.09468	-.01785	.00197	-.00002	.00007	.38650	.00000	.00000
400.530	600.100	-.07211	.09348	-.01786	.00224	-.00005	.00006	.38532	.00000	.00000
	GRADIENT	.00000	.00000	.00000	.00000	.00000	.00000	.00000	.00000	.00000

AEDC VA422(IA17) ORB AND ET SEPARATING(ET DATA) (ATR049) (24 JUL 75)

REFERENCE DATA

SREF = 2690.0000 SQ.FT. XMRP = 1360.1000 IN. XT
LREF = 1290.3000 IN. YMRP = .0000 IN. YT
BREF = 1290.3000 IN. ZMRP = 416.4000 IN. ZT
SCALE = .0100

PARAMETRIC DATA

DLT-Y = .000 ALPHA = -5.000
BETA = .000 DLTALF = -10.000
DLTBTA = .000 MACH = 5.930
AILRON = .000 ELEVON = -20.000
GRID = 11.000

RUN NO. 398/ 0 GRADIENT INTERVAL = -5.00/ 5.00

DLT-X	DLT-Z	CN	CA	CLM	CY	CYN	CBL	XCP/L	YCP/L	CPB
.520	404.110	-.26581	.12828	-.02139	.00451	-.00042	.00026	.50211	.00000	.00000
.503	500.870	-.25407	.12145	-.02827	.00458	-.00031	.00028	.48060	.00000	.00000
.428	600.380	-.23647	.11141	-.03784	.00386	.00051	.00017	.44655	.00000	.00000
.453	750.200	-.23455	.11170	-.03588	.00337	.00040	.00021	.45149	.00000	.00000
.177	800.580	-.23408	.11231	-.03574	.00339	.00049	.00022	.45168	.00000	.00000
	GRADIENT	.00000	.00000	.00000	.00000	.00000	.00000	.00000	.00000	.00000

RUN NO. 399/ 0 GRADIENT INTERVAL = -5.00/ 5.00

DLT-X	DLT-Z	CN	CA	CLM	CY	CYN	CBL	XCP/L	YCP/L	CPB
400.490	396.850	-.23978	.11186	-.04028	.00387	.00124	.00021	.44097	.00000	.00000
400.410	499.520	-.25260	.11885	-.03111	.00364	.00045	.00019	.47231	.00000	.00000
400.470	600.050	-.25474	.12228	-.02636	.00528	-.00043	.00037	.48604	.00000	.00000
400.390	750.200	-.23354	.11154	-.03671	.00335	.00053	.00020	.44853	.00000	.00000
400.520	800.200	-.23392	.11060	-.03646	.00351	.00051	.00019	.44945	.00000	.00000
	GRADIENT	.00000	.00000	.00000	.00000	.00000	.00000	.00000	.00000	.00000

AEDC VA422(IA17) ORB AND ET SEPARATING(ET DATA) (ATR051) (24 JUL 75)

REFERENCE DATA

SREF = 2690.0000 SQ.FT. XMRP = 1360.1000 IN. XT
LREF = 1290.3000 IN. YMRP = .0000 IN. YT
BREF = 1290.3000 IN. ZMRP = 416.4000 IN. ZT
SCALE = .0100

PARAMETRIC DATA

DLT-Y = .000 ALPHA = -5.000
BETA = .000 DLTALF = -20.000
DLTBTA = .000 MACH = 5.930
AILRON = .000 ELEVON = -20.000
GRID = 11.000

RUN NO. 408/ 0 GRADIENT INTERVAL = -5.00/ 5.00

DLT-X	DLT-Z	CN	CA	CLM	CY	CYN	CBL	XCP/L	YCP/L	CPB
.408	804.590	-.50471	.14908	-.02088	.00848	-.00016	.00045	.52946	.57116	.00000
.429	900.820	-.48135	.14949	-.03269	.00786	-.00035	.00052	.51090	.58921	.00000
.536	1000.400	-.47891	.14867	-.03271	.00798	-.00014	.00049	.51062	.57025	.00000
	GRADIENT	.00000	.00000	.00000	.00000	.00000	.00000	.00000	.00000	.00000

AEDC VA422(IA17) ORB AND ET SEPARATING(ET DATA) (ATR051) (24 JUL 75)

REFERENCE DATA

SREF = 2690.0000 SQ.FT. XMRP = 1360.1000 IN. XT
LREF = 1290.3000 IN. YMRP = .0000 IN. YT
BREF = 1290.3000 IN. ZMRP = 416.4000 IN. ZT
SCALE = .0100

PARAMETRIC DATA

DLT-Y = .000 ALPHA = -5.000
BETA = .000 DLTALF = -20.000
DLTBTA = .000 MACH = 5.930
AILRON = .000 ELEVON = -20.000
GRID = 11.000

RUN NO. 400/ 0 GRADIENT INTERVAL = -5.00/ 5.00

DLT-X	DLT-Z	CN	CA	CLM	CY	CYN	CBL	XCP/L	YCP/L	CPB
400.440	751.120	-.51870	.16126	-.01505	.00909	-.00019	.00046	.53808	.57318	.00000
400.460	800.570	-.50686	.16039	-.01950	.00968	-.00054	.00093	.53147	.59754	.00000
400.430	900.320	-.49419	.15199	-.02482	.00878	-.00010	.00046	.52325	.56601	.00000
400.500	1000.400	-.47812	.14690	-.03395	.00917	-.00000	.00049	.50853	.55854	.00000
	GRADIENT	.00000	.00000	.00000	.00000	.00000	.00000	.00000	.00000	.00000

AEDC VA422(IA17) ORB AND ET SEPARATING(ET DATA) (ATR052) (24 JUL 75)

REFERENCE DATA

SREF = 2690.0000 SQ.FT. XMRP = 1360.1000 IN. XT
LREF = 1290.3000 IN. YMRP = .0000 IN. YT
BREF = 1290.3000 IN. ZMRP = 416.4000 IN. ZT
SCALE = .0100

PARAMETRIC DATA

DLT-Y = .000 ALPHA = 5.000
BETA = .000 DLTALF = .000
DLTBTA = .000 MACH = 5.930
AILRON = .000 ELEVON = -20.000
GRID = 12.000

RUN NO. 409/ 0 GRADIENT INTERVAL = -5.00/ 5.00

DLT-X	DLT-Z	CN	CA	CLM	CY	CYN	CBL	XCP/L	YCP/L	CPB
.657	19.218	.01769	.09206	.02840	.00358	.00049	.00012	-.56323	.00000	.00000
.616	98.044	.02473	.09300	.02874	.00476	.00015	.00002	-.25357	.53663	.00000
.557	199.160	.03925	.09253	.02922	.00471	-.00032	.00006	.03823	.60616	.00000
.633	300.180	.05643	.08567	.01967	.00240	.00004	.00003	.31478	.00000	.00000
.607	402.140	.05666	.08673	.01944	.00288	.00022	.00004	.31859	.00000	.00000
.628	500.990	.05665	.08679	.01924	.00340	.00038	.00003	.32115	.00000	.00000
.691	598.250	.05764	.08756	.01997	.00261	.00019	.00003	.31632	.00000	.00000
	GRADIENT	.00000	.00000	.00000	.00000	.00000	.00000	.00000	.00000	.00000

RUN NO. 410/ 0 GRADIENT INTERVAL = -5.00/ 5.00

DLT-X	DLT-Z	CN	CA	CLM	CY	CYN	CBL	XCP/L	YCP/L	CPB
400.520	20.011	.00880	.09530	.01118	.00657	.00056	.00016	-.32858	.49828	.00000
400.430	98.263	.01161	.09594	.03010	.00553	.00024	.00009	-1.25290	.52838	.00000
400.520	199.950	.02515	.09699	.03635	.00547	-.00073	.00010	-.45151	.65196	.00000
400.580	298.680	.05481	.08507	.02068	.00309	.00023	.00003	.29470	.00000	.00000
400.600	397.990	.05704	.08609	.01975	.00310	.00033	.00003	.31643	.00000	.00000
400.580	499.530	.05645	.08658	.01964	.00290	.00022	.00004	.31521	.00000	.00000
400.670	599.830	.05792	.08764	.02088	.00334	.00028	.00002	.30650	.00000	.00000
	GRADIENT	.00000	.00000	.00000	.00000	.00000	.00000	.00000	.00000	.00000

AEDC VA422(IA17) ORB AND ET SEPARATING(ET DATA) (ATR053) (24 JUL 75)

REFERENCE DATA

SREF = 2690.0000 SQ.FT. XMRP = 1360.1000 IN. XT
LREF = 1290.3000 IN. YMRP = .0000 IN. YT
BREF = 1290.3000 IN. ZMRP = 418.4000 IN. ZT
SCALE = .0100

PARAMETRIC DATA

DLT-Y = .000 ALPHA = 5.000
BETA = .000 DLTALF = -10.000
DLTBTA = .000 MACH = 5.930
AILRON = .000 ELEVON = -20.000
GRID = 12.000

RUN NO. 411/ 0 GRADIENT INTERVAL = -5.00/ 5.00

DLT-X	DLT-Z	CN	CA	CLM	CY	CYN	CBL	XCP/L	YCP/L	CPB
.562	401.130	-.08800	.09758	-.00045	.00670	.00045	.00005	.55480	.51159	.00000
.462	502.800	-.06507	.09157	-.01504	.00505	.00079	.00003	.39685	.44931	.00000
.487	601.670	-.06654	.09228	-.01541	.00495	.00084	.00003	.39652	.43917	.00000
.628	750.080	-.06510	.09463	-.01511	.00523	.00097	.00002	.39622	.42819	.00000
-.651	802.930	-.06629	.09433	-.01559	.00565	.00100	.00002	.39406	.43426	.00000
	GRADIENT	.00000	.00000	.00000	.00000	.00000	.00000	.00000	.00000	.00000

RUN NO. 412/ 0 GRADIENT INTERVAL = -5.00/ 5.00

DLT-X	DLT-Z	CN	CA	CLM	CY	CYN	CBL	XCP/L	YCP/L	CPB
400.470	398.070	-.11289	.10556	.01268	.00534	-.00024	.00004	.63868	.59000	.00000
400.610	497.620	-.08799	.09048	-.01214	.00581	.00095	.00003	.43359	.43955	.00000
400.480	599.230	-.08429	.09264	-.01475	.00448	.00073	.00003	.39804	.00000	.00000
400.880	750.100	-.08150	.09452	-.01486	.00488	.00078	.00002	.39183	.44489	.00000
400.800	800.160	-.08589	.09528	-.01491	.00512	.00104	.00003	.39973	.41667	.00000
	GRADIENT	.00000	.00000	.00000	.00000	.00000	.00000	.00000	.00000	.00000

AEDC VA422(IA17) ORB AND ET SEPARATING(ET DATA) (ATR055) (24 JUL 75)

REFERENCE DATA

SREF = 2690.0000 SQ.FT. XMRP = 1360.1000 IN. XT
LREF = 1290.3000 IN. YMRP = .0000 IN. YT
BREF = 1290.3000 IN. ZMRP = 416.4000 IN. ZT
SCALE = .0100

PARAMETRIC DATA

DLT-Y = .000 ALPHA = 5.000
BETA = .000 DLTALF = -20.000
DLTBTA = .000 MACH = 5.930
AILRON = .000 ELEVON = -20.000
GRID = 12.000

RUN NO. 419/ 0 GRADIENT INTERVAL = -5.00/ 5.00

DLT-X	DLT-Z	CN	CA	CLM	CY	CYN	CBL	XCP/L	YCP/L	CPB
.420	801.230	-.22343	.11185	-.03817	.00727	.00173	.00013	.44525	.39211	.00000
.490	900.170	-.22481	.11225	-.03768	.00597	.00144	.00012	.44113	.39019	.00000
.412	1000.100	-.22860	.11252	-.03780	.00584	.00128	.00012	.44342	.40555	.00000
	GRADIENT	.00000	.00000	.00000	.00000	.00000	.00000	.00000	.00000	.00000

AEDC VA422(IA17) ORB AND ET SEPARATING(ET DATA) (ATR055) (24 JUL 75)

REFERENCE DATA

SREF = 2690.0000 SQ.FT. XMRP = 1360.1000 IN. XT
LREF = 1290.3000 IN. YMRP = .0000 IN. YT
BREF = 1290.3000 IN. ZMRP = 416.4000 IN. ZT
SCALE = .0100

PARAMETRIC DATA

DLT-Y = .000 ALPHA = 5.000
BETA = .000 DLTALF = -20.000
DLTBTA = .000 MACH = 5.930
AILRON = .000 ELEVON = -20.000
GRID = 12.000

RUN NO. 413/ 0 GRADIENT INTERVAL = -5.00/ 5.00

DLT-X	DLT-Z	CN	CA	CLM	CY	CYN	CBL	XCP/L	YCP/L	CPB
400.500	750.220	-.22887	.11106	-.03253	.00607	.00143	.00011	.45905	.39400	.00000
400.510	800.280	-.22442	.11295	-.03602	.00586	.00122	.00013	.44619	.41276	.00000
400.430	900.070	-.22516	.11491	-.03767	.00638	.00153	.00014	.44146	.39105	.00000
400.510	1000.300	-.22879	.11331	-.03893	.00541	.00124	.00013	.43945	.00000	.00000
	GRADIENT	.00000	.00000	.00000	.00000	.00000	.00000	.00000	.00000	.00000

AEDC VA422(IA17) ORB AND ET SEPARATING(ET DATA) (ATR056) (24 JUL 75)

REFERENCE DATA

SREF = 2690.0000 SQ.FT. XMRP = 1360.1000 IN. XT
LREF = 1290.3000 IN. YMRP = .0000 IN. YT
BREF = 1290.3000 IN. ZMRP = 416.4000 IN. ZT
SCALE = .0100

PARAMETRIC DATA

DLT-Y = .000 ALPHA = .000
BETA = .000 DLTALF = .000
DLTBTA = .000 MACH = 5.930
AILRON = .000 ELEVON = -20.000
GRID = 13.000

RUN NO. 422/ 0 GRADIENT INTERVAL = -5.00/ 5.00

DLT-X	DLT-Z	CN	CA	CLM	CY	CYN	CBL	XCP/L	YCP/L	CPB
.558	18.831	-.03691	.09481	.00837	.00400	.00062	.00023	.67897	.00000	.00000
.548	99.442	-.03218	.09486	.00720	.00488	.00042	.00009	.71460	.49877	.00000
.534	200.570	-.02229	.09666	.01071	.00338	.00011	.00010	.89392	.00000	.00000
.572	302.170	-.00665	.09039	.00159	.00268	.00028	.00004	.72568	.00000	.00000
.610	400.890	-.00562	.09301	.00257	.00269	.00044	.00005	.87823	.00000	.00000
.645	499.990	-.00718	.09506	.00197	.00251	.00039	.00005	.75044	.00000	.00000
.608	600.050	-.00896	.09447	.00142	.00281	.00040	.00004	.66935	.00000	.00000
	GRADIENT	.00000	.00000	.00000	.00000	.00000	.00000	.00000	.00000	.00000

RUN NO. 423/ 0 GRADIENT INTERVAL = -5.00/ 5.00

DLT-X	DLT-Z	CN	CA	CLM	CY	CYN	CBL	XCP/L	YCP/L	CPB
400.530	19.977	-.04556	.09873	-.00787	.00662	.00029	.00019	.43767	.52778	.00000
400.490	97.644	-.03903	.09669	.00784	.00481	.00043	.00007	.69863	.49636	.00000
400.540	198.800	-.02689	.09476	.01119	.00362	.00043	.00002	.84910	.00000	.00000
400.430	297.670	-.01478	.09380	.00730	.00330	.00039	.00003	.90344	.00000	.00000
400.480	399.060	-.00568	.09150	.00293	.00378	.00059	.00004	.92041	.00000	.00000
400.460	500.090	-.00829	.09428	.00271	.00345	.00048	.00004	.85939	.00000	.00000
400.520	600.200	-.00909	.09512	.00125	.00352	.00050	.00003	.65421	.00000	.00000
	GRADIENT	.00000	.00000	.00000	.00000	.00000	.00000	.00000	.00000	.00000

AEDC VA422(IA17) ORB AND ET SEPARATIN0(ET DATA) (ATR057) (24 JUL 75)

REFERENCE DATA

SREF = 2690.0000 SQ.FT. XMRP = 1360.1000 IN. XT
LREF = 1290.3000 IN. YMRP = .0000 IN. YT
BREF = 1290.3000 IN. ZMRP = 416.4000 IN. ZT
SCALE = .0100

PARAMETRIC DATA

DLT-Y = .000 ALPHA = .000
BETA = .000 DLTALF = -10.000
DLTBTA = .000 MACH = 5.930
AILRON = .000 ELEVON = -20.000
GRID = 13.000

RUN NO. 424/ 0 GRADIENT INTERVAL = -5.00/ 5.00

DLT-X	DLT-Z	CN	CA	CLM	CY	CYN	CBL	XCP/L	YCP/L	CPB
.447	403.640	-.16244	.11305	-.01224	.00665	-.00026	.00010	.50571	.58595	.00000
.477	501.740	-.14174	.10224	-.02626	.00378	.00080	.00007	.42893	.00000	.00000
.522	600.190	-.13855	.10427	-.02936	.00452	.00112	.00004	.41030	.00000	.00000
.545	750.040	-.14192	.10328	-.03017	.00302	.00065	.00006	.40982	.00000	.00000
-.239	801.750	-.14317	.10251	-.03042	.00371	.00076	.00004	.40989	.00000	.00000
	GRADIENT	.00000	.00000	.00000	.00000	.00000	.00000	.00000	.00000	.00000

RUN NO. 425/ 0 GRADIENT INTERVAL = -5.00/ 5.00

DLT-X	DLT-Z	CN	CA	CLM	CY	CYN	CBL	XCP/L	YCP/L	CPB
400.520	396.740	-.16803	.11182	-.01127	.00570	.00070	-.00001	.51149	.47285	.00000
400.460	498.350	-.15633	.11172	-.01584	.00579	.00013	.00010	.48757	.54280	.00000
400.540	600.240	-.14123	.10347	-.02738	.00413	.00108	.00004	.42291	.00000	.00000
400.510	750.210	-.14104	.10361	-.03074	.00402	.00090	.00004	.40609	.00000	.00000
400.530	800.170	-.14391	.10315	-.03020	.00413	.00105	.00005	.41176	.00000	.00000
	GRADIENT	.00000	.00000	.00000	.00000	.00000	.00000	.00000	.00000	.00000

AEDC VA422(IA17) ORB AND ET SEPARATING(ET DATA) (ATR059) (24 JUL 75)

REFERENCE DATA

SREF = 2690.0000 SQ.FT. XMRP = 1360.1000 IN. XT
LREF = 1290.3000 IN. YMRP = .0000 IN. YT
BREF = 1290.3000 IN. ZMRP = 416.4000 IN. ZT
SCALE = .0100

PARAMETRIC DATA

DLT-Y = .000 ALPHA = .000
BETA = .000 DLTALF = -20.000
DLTBTA = .000 MACH = 5.930
AILRON = .000 ELEVON = -20.000
GRID = 13.000

RUN NO. 432/ 0 GRADIENT INTERVAL = -5.00/ 5.00

DLT-X	DLT-Z	CN	CA	CLM	CY	CYN	CBL	XCP/L	YCP/L	CPB
.442	801.840	-.34368	.12905	-.04127	.00700	.00021	.00030	.47446	.53712	.00000
.500	900.600	-.34421	.12676	-.04131	.00732	.00053	.00033	.47449	.50803	.00000
.450	1000.200	-.34369	.12771	-.03881	.00676	.00042	.00035	.47944	.51449	.00000
	GRADIENT	.00000	.00000	.00000	.00000	.00000	.00000	.00000	.00000	.00000

ORIGINAL PAGE IS OF POOR QUALITY

AEDC VA422(IA17) ORB AND ET SEPARATING(ET DATA) (ATR059) (24 JUL 75)

REFERENCE DATA

SREF = 2690.0000 SQ.FT. XMRP = 1360.1000 IN. XT
LREF = 1290.3000 IN. YMRP = .0000 IN. YT
BREF = 1290.3000 IN. ZMRP = 416.4000 IN. ZT
SCALE = .0100

PARAMETRIC DATA

DLT-Y = .000 ALPHA = .000
BETA = .000 DLTALF = -20.000
DLTBTA = .000 MACH = 5.930
AILRON = .000 ELEVON = -20.000
GRID = 13.000

RUN NO. 426/ 0 GRADIENT INTERVAL = -5.00/ 5.00

DLT-X	DLT-Z	CN	CA	CLM	CY	CYN	CBL	XCP/L	YCP/L	CPB
400.400	750.280	-.37027	.14299	-.02400	.00950	-.00015	.00036	.51305	.56934	.00000
400.450	800.310	-.35858	.13486	-.03194	.00829	.00034	.00028	.49612	.52932	.00000
400.470	900.460	-.34269	.12961	-.04002	.00923	.00064	.00034	.47676	.50976	.00000
400.460	1000.400	-.34422	.12907	-.03809	.00928	.00061	.00036	.48104	.51218	.00000
	GRADIENT	.00000	.00000	.00000	.00000	.00000	.00000	.00000	.00000	.00000

AEDC VA422(IA17) ORB AND ET SEPARATING(ET DATA) (ATR060) (24 JUL 75)

REFERENCE DATA

SREF = 2690.0000 SQ.FT. XMRP = 1360.1000 IN. XT
LREF = 1290.3000 IN. YMRP = .0000 IN. YT
BREF = 1290.3000 IN. ZMRP = 416.4000 IN. ZT
SCALE = .0100

PARAMETRIC DATA

DLT-Y = .000 ALPHA = .000
BETA = 3.000 DLTALF = .000
DLTBTA = .000 MACH = 5.930
AILRON = .000 ELEVON = -20.000
GRID = 14.000

RUN NO. 435/ 0 GRADIENT INTERVAL = -5.00/ 5.00

DLT-X	DLT-Z	CN	CA	CLM	CY	CYN	CBL	XCP/L	YCP/L	CPB
.610	18.820	-.03914	.09484	.00740	-.03661	-.00966	.00047	.69050	.37401	.00000
.535	99.442	-.03428	.09512	.00775	-.03444	-.00996	.00044	.71631	.35637	.00000
.678	200.620	-.02381	.09772	.01188	-.03269	-.01184	.00018	.90701	.30534	.00000
.642	302.040	-.00737	.09024	.00173	-.03393	-.01151	.00032	.72178	.32125	.00000
.638	400.960	-.00762	.09127	.00232	-.03484	-.01176	.00033	.77056	.32254	.00000
.671	500.110	-.00818	.09232	.00237	-.03810	-.01258	.00034	.76081	.31478	.00000
.638	600.150	-.00960	.09268	.00167	-.03546	-.01284	.00033	.68005	.30534	.00000
	GRADIENT	.00000	.00000	.00000	.00000	.00000	.00000	.00000	.00000	.00000

AEDC VA422(IA17) ORB AND ET SEPARATING(ET DATA) (ATR061) (24 JUL 75)

REFERENCE DATA

SREF = 2690.0000 SQ.FT. XMRP = 1360.1000 IN. XT
LREF = 1290.3000 IN. YMRP = .0000 IN. YT
BREF = 1290.3000 IN. ZMRP = 416.4000 IN. ZT
SCALE = .0100

PARAMETRIC DATA

DLT-Y = .000 ALPHA = .000
BETA = 3.000 DLTALF = -10.000
DLTBTA = .000 MACH = 5.930
AILRON = .000 ELEVON = -20.000
GRID = 14.000

RUN NO. 438/ 0 GRADIENT INTERVAL = -5.00/ 5.00

DLT-X	DLT-Z	CN	CA	CLM	CY	CYN	CBL	XCP/L	YCP/L	CPB
.581	403.800	-.16581	.11340	-.01136	-.03481	-.01020	.00035	.51047	.35372	.00000
.503	501.810	-.14418	.10264	-.02424	-.03670	-.01045	.00029	.44086	.35950	.00000
.528	600.170	-.14088	.10365	-.02727	-.03834	-.01037	.00034	.42313	.36937	.00000
.589	750.090	-.14493	.10429	-.02748	-.03845	-.01068	.00035	.42586	.36468	.00000
-.091	801.560	-.14491	.10376	-.02732	-.03835	-.01044	.00035	.42661	.36816	.00000
	GRADIENT	.00000	.00000	.00000	.00000	.00000	.00000	.00000	.00000	.00000

AEDC VA422(IA17) ORB AND ET SEPARATING(ET DATA) (ATR062) (24 JUL 75)

REFERENCE DATA

SREF = 2690.0000 SQ.FT. XMRP = 1360.1000 IN. XT
LREF = 1290.3000 IN. YMRP = .0000 IN. YT
BREF = 1290.3000 IN. ZMRP = 416.4000 IN. ZT
SCALE = .0100

PARAMETRIC DATA

DLT-Y = .000 ALPHA = .000
BETA = 3.000 DLTALF = -20.000
DLTBTA = .000 MACH = 5.930
AILRON = .000 ELEVON = -20.000
GRID = 14.000

RUN NO. 437/ 0 GRADIENT INTERVAL = -5.00/ 5.00

DLT-X	DLT-Z	CN	CA	CLM	CY	CYN	CBL	XCP/L	YCP/L	CPB
.507	801.840	-.34498	.12795	-.03766	-.04937	-.00748	.00028	.48207	.45242	.00000
.549	900.460	-.34699	.12949	-.03624	-.05045	-.00756	.00033	.48538	.45368	.00000
.540	1000.200	-.34762	.12870	-.03504	-.04818	-.00672	.00027	.48792	.46085	.00000
	GRADIENT	.00000	.00000	.00000	.00000	.00000	.00000	.00000	.00000	.00000

AEDC VA422(IA17) ORB AND ET SEPARATING(ET DATA) (ATR063) (24 JUL 75)

REFERENCE DATA

SREF = 2690.0000 SQ.FT. XMRP = 1360.1000 IN. XT
LREF = 1290.3000 IN. YMRP = .0000 IN. YT
BREF = 1290.3000 IN. ZMRP = 416.4000 IN. ZT
SCALE = .0100

PARAMETRIC DATA

DLT-Y = .000 ALPHA = .000
BETA = 3.000 DLTALF = .000
DLTBTA = .000 MACH = 5.930
AILRON = .000 ELEVON = -40.000
GRID = 14.000

RUN NO. 450/ 0 GRADIENT INTERVAL = -5.00/ 5.00

DLT-X	DLT-Z	CN	CA	CLM	CY	CYN	CBL	XCP/L	YCP/L	CPB
.573	18.747	-.03898	.09428	.00725	-.03898	-.00975	.00048	.68823	.37368	.00000
.633	99.570	-.03419	.09377	.00775	-.03526	-.01021	.00044	.71686	.35807	.00000
.563	200.630	-.02440	.09689	.01199	-.03381	-.01219	.00019	.89904	.30492	.00000
.653	302.090	-.00799	.08948	.00172	-.03495	-.01174	.00033	.70852	.32370	.00000
.562	401.000	-.00798	.09072	.00225	-.03670	-.01228	.00034	.75506	.32453	.00000
.637	500.070	-.00831	.09183	.00230	-.03711	-.01286	.00036	.75183	.31629	.00000
.646	600.090	-.00990	.09182	.00167	-.03683	-.01303	.00035	.67628	.31131	.00000
	GRADIENT	.00000	.00000	.00000	.00000	.00000	.00000	.00000	.00000	.00000

AEDC VA422(IA17) ORB AND ET SEPARATING(ET DATA) (ATR064) (24 JUL 75)

REFERENCE DATA

SREF = 2690.0000 SQ.FT. XMRP = 1360.1000 IN. XT
LREF = 1290.3000 IN. YMRP = .0000 IN. YT
BREF = 1290.3000 IN. ZMRP = 416.4000 IN. ZT
SCALE = .0100

PARAMETRIC DATA

DLT-Y = .000 ALPHA = .000
BETA = 3.000 DLTALF = -10.000
DLTBTA = .000 MACH = 5.930
AILRON = .000 ELEVON = -40.000
GRID = 14.000

RUN NO. 451/ 0 GRADIENT INTERVAL = -5.00/ 5.00

DLT-X	DLT-Z	CN	CA	CLM	CY	CYN	CBL	XCP/L	YCP/L	CPB
.552	403.780	-.16815	.11155	-.01135	-.03514	-.01040	.00035	.51062	.35159	.00000
.464	501.700	-.14487	.10217	-.02412	-.03707	-.01043	.00029	.44201	.36179	.00000
.575	600.240	-.14294	.10254	-.02718	-.03938	-.01068	.00035	.42548	.36878	.00000
.635	750.080	-.14429	.10317	-.02740	-.03931	-.01087	.00036	.42569	.36512	.00000
-.274	801.130	-.14556	.10301	-.02723	-.03775	-.01032	.00034	.42763	.36730	.00000
	GRADIENT	.00000	.00000	.00000	.00000	.00000	.00000	.00000	.00000	.00000

AEDC VA422(IA17) ORB AND ET SEPARATING(ET DATA) (ATR085) (24 JUL 75)

REFERENCE DATA

SREF = 2690.0000 SQ.FT. XMRP = 1380.1000 IN. XT
LREF = 1290.3000 IN. YMRP = .0000 IN. YT
BREF = 1290.3000 IN. ZMRP = 416.4000 IN. ZT
SCALE = .0100

PARAMETRIC DATA

DLT-Y = .000 ALPHA = .000
BETA = 3.000 DLTALF = -20.000
DLTBTA = .000 MACH = 5.930
AILRON = .000 ELEVON = -40.000
GRID = 14.000

RUN NO. 452/ 0 GRADIENT INTERVAL = -5.00/ 5.00

DLT-X	DLT-Z	CN	CA	CLM	CY	CYN	CBL	XCP/L	YCP/L	CPB
.524	801.760	-.34635	.12759	-.03760	-.05053	-.00780	.00029	.48250	.45050	.00000
.562	900.470	-.34875	.12871	-.03635	-.05007	-.00743	.00032	.48551	.45459	.00000
.525	1000.300	-.34894	.12811	-.03507	-.04829	-.00672	.00029	.48813	.46118	.00000
	GRADIENT	.00000	.00000	.00000	.00000	.00000	.00000	.00000	.00000	.00000

AEDC VA422(IA17) ORB AND ET SEPARATING(ET DATA) (ATR066) (24 JUL 75)

REFERENCE DATA

SREF = 2690.0000 SQ.FT. XMRP = 1360.1000 IN. XT
LREF = 1290.3000 IN. YMRP = .0000 IN. YT
BREF = 1290.3000 IN. ZMRP = 416.4000 IN. ZT
SCALE = .0100

PARAMETRIC DATA

DLT-Y = .000 ALPHA = .000
BETA = .000 DLTALF = .000
DLTBTA = .000 MACH = 5.930
AILRON = .000 ELEVON = -40.000
GRID = 13.000

RUN NO. 595/ 0 GRADIENT INTERVAL = -5.00/ 5.00

DLT-X	DLT-Z	CN	CA	CLM	CY	CYN	CBL	XCP/L	YCP/L	CPB
.391	19.014	-.03844	.09133	.00808	.00120	.00005	.00022	.66880	.00000	.00000
.417	99.605	-.03378	.09130	.00690	.00078	-.00026	.00009	.70111	.00000	.00000
.449	200.450	-.02518	.09360	.01153	.00018	-.00069	.00011	.87833	.00000	.00000
.600	302.060	-.00777	.08689	.00176	.00043	-.00013	.00003	.71624	.00000	.00000
.455	400.890	-.00690	.08939	.00267	.00077	.00000	.00002	.82889	.00000	.00000
.481	500.120	-.00940	.09063	.00210	-.00097	-.00033	.00007	.71418	.00000	.00000
.470	600.170	-.01005	.09148	.00151	.00028	-.00004	.00004	.66314	.00000	.00000
	GRADIENT	.00000	.00000	.00000	.00000	.00000	.00000	.00000	.00000	.00000

RUN NO. 596/ 0 GRADIENT INTERVAL = -5.00/ 5.00

DLT-X	DLT-Z	CN	CA	CLM	CY	CYN	CBL	XCP/L	YCP/L	CPB
400.490	19.997	-.04628	.09288	-.00808	.00470	-.00019	.00019	.43661	.58656	.00000
400.520	97.724	-.04045	.09295	.00750	.00204	-.00006	.00008	.68780	.00000	.00000
400.530	199.010	-.02924	.09128	.01119	.00095	-.00011	.00002	.82574	.00000	.00000
400.590	297.790	-.01625	.09045	.00755	.00032	-.00016	.00004	.88279	.00000	.00000
400.460	399.130	-.00654	.08808	.00312	-.00042	-.00035	.00005	.89204	.00000	.00000
400.500	500.050	-.00842	.09006	.00294	-.00100	-.00048	.00006	.80264	.00000	.00000
400.540	600.200	-.00988	.09121	.00143	-.00108	-.00051	.00006	.65924	.00000	.00000
	GRADIENT	.00000	.00000	.00000	.00000	.00000	.00000	.00000	.00000	.00000

ORIGINAL PAGE IS OF POOR QUALITY

AEDC VA422(IA17) ORB AND ET SEPARATING(ET DATA) (ATR067) (24 JUL 75)

REFERENCE DATA

SREF = 2690.0000 SQ.FT. XMRP = 1360.1000 IN. XT
LREF = 1290.3000 IN. YMRP = .0000 IN. YT
BREF = 1290.3000 IN. ZMRP = 416.4000 IN. ZT
SCALE = .0100

PARAMETRIC DATA

DLT-Y = .000 ALPHA = .000
BETA = .000 DLTALF = -10.000
DLTBTA = .000 MACH = 5.930
AILRON = .000 ELEVON = -40.000
GRID = 13.000

RUN NO. 597/ 0 GRADIENT INTERVAL = -5.00/ 5.00

DLT-X	DLT-Z	CN	CA	CLM	CY	CYN	CBL	XCP/L	YCP/L	CPB
.550	403.430	-.16534	.10952	-.01209	.00298	-.00075	.00010	.50726	.00000	.00000
.504	501.640	-.14454	.09899	-.02596	.00163	.00054	.00004	.43287	.00000	.00000
.509	600.170	-.14191	.10095	-.02924	.00126	.00038	.00004	.41441	.00000	.00000
.543	750.030	-.14463	.09973	-.03014	.00139	.00046	.00004	.41275	.00000	.00000
-.163	801.470	-.14512	.09968	-.03044	.00098	.00028	.00003	.41182	.00000	.00000
	GRADIENT	.00000	.00000	.00000	.00000	.00000	.00000	.00000	.00000	.00000

RUN NO. 598/ 0 GRADIENT INTERVAL = -5.00/ 5.00

DLT-X	DLT-Z	CN	CA	CLM	CY	CYN	CBL	XCP/L	YCP/L	CPB
400.450	396.830	-.16735	.10787	-.01168	.00221	.00024	.00000	.50958	.00000	.00000
400.500	498.630	-.16051	.10822	-.01564	.00421	-.00026	.00007	.49025	.00000	.00000
400.440	600.150	-.14307	.10029	-.02736	.00192	.00058	.00004	.42475	.00000	.00000
400.540	750.330	-.14417	.10013	-.03054	.00147	.00045	.00002	.41037	.00000	.00000
400.460	800.150	-.14541	.10049	-.03009	.00114	.00026	.00003	.41378	.00000	.00000
	GRADIENT	.00000	.00000	.00000	.00000	.00000	.00000	.00000	.00000	.00000

AEDC VA422(IA17) ORB AND ET SEPARATING(ET DATA) (ATR069) (24 JUL 75)

REFERENCE DATA

SREF = 2690.0000 SQ.FT. XMRP = 1360.1000 IN. XT
LREF = 1290.3000 IN. YMRP = .0000 IN. YT
BREF = 1290.3000 IN. ZMRP = 416.4000 IN. ZT
SCALE = .0100

PARAMETRIC DATA

DLT-Y = .000 ALPHA = .000
BETA = .000 DLTALF = -20.000
DLTBTA = .000 MACH = 5.930
AILRON = .000 ELEVON = -40.000
GRID = 13.000

RUN NO. 600/ 0 GRADIENT INTERVAL = -5.00/ 5.00

DLT-X	DLT-Z	CN	CA	CLM	CY	CYN	CBL	XCP/L	YCP/L	CPB
.440	801.820	-.34483	.12551	-.04133	.00468	-.00007	.00031	.47461	.00000	.00000
.421	900.440	-.34575	.12472	-.04124	.00539	.00012	.00034	.47502	.00000	.00000
.399	1000.300	-.34693	.12468	-.03871	.00375	-.00026	.00036	.48040	.00000	.00000
	GRADIENT	.00000	.00000	.00000	.00000	.00000	.00000	.00000	.00000	.00000

AEDC VA422(IA17) ORB AND ET SEPARATING(ET DATA) (ATR069) (24 JUL 75)

REFERENCE DATA

SREF = 2690.0000 SQ.FT. XMRP = 1360.1000 IN. XT
LREF = 1290.3000 IN. YMRP = .0000 IN. YT
BREF = 1290.3000 IN. ZMRP = 416.4000 IN. ZT
SCALE = .0100

PARAMETRIC DATA

DLT-Y = .000 ALPHA = .000
BETA = .000 DLTALF = -20.000
DLTBTA = .000 MACH = 5.930
AILRON = .000 ELEVON = -40.000
GRID = 13.000

RUN NO. 599/ 0 GRADIENT INTERVAL = -5.00/ 5.00

DLT-X	DLT-Z	CN	CA	CLM	CY	CYN	CBL	XCP/L	YCP/L	CPB
400.330	750.290	-.37271	.14048	-.02333	.00462	-.00119	.00035	.51462	.00000	.00000
400.250	800.190	-.36062	.13184	-.03134	.00549	-.00031	.00028	.49763	.00000	.00000
400.350	900.360	-.34663	.12647	-.03974	.00355	-.00039	.00033	.47825	.00000	.00000
400.330	1000.300	-.34723	.12565	-.03797	.00540	.00009	.00036	.48194	.00000	.00000
	GRADIENT	.00000	.00000	.00000	.00000	.00000	.00000	.00000	.00000	.00000

AEDC VA422(IA17) ORB AND ET SEPARATING(ET DATA) (ATR070) (24 JUL 75)

REFERENCE DATA

SREF = 2690.0000 SQ.FT. XMRP = 1360.1000 IN. XT
LREF = 1290.3000 IN. YMRP = .0000 IN. YT
BREF = 1290.3000 IN. ZMRP = 416.4000 IN. ZT
SCALE = .0100

PARAMETRIC DATA

DLT-Y = .000 ALPHA = 5.000
BETA = .000 DLTALF = .000
DLTBTA = .000 MACH = 5.930
AILRON = .000 ELEVON = -40.000
GRID = 12.000

RUN NO. 608/ 0 GRADIENT INTERVAL = -5.00/ 5.00

DLT-X	DLT-Z	CN	CA	CLM	CY	CYN	CBL	XCP/L	YCP/L	CPB
.555	19.457	.01434	.09018	.02839	.00044	-.00032	.00012	-.82457	.00000	.00000
.632	98.375	.02175	.09103	.02872	.00038	-.00083	.00004	-.36407	.00000	.00000
.624	199.190	.03548	.08948	.02935	-.00058	-.00144	.00006	-.01951	.00000	.00000
.636	300.100	.05301	.08347	.01975	-.00166	-.00078	.00006	.29807	.00000	.00000
.612	402.150	.05293	.08441	.01950	-.00125	-.00078	.00004	.30095	.00000	.00000
.566	500.950	.05337	.08473	.01935	-.00143	-.00068	.00005	.30499	.00000	.00000
.628	597.970	.05459	.08536	.02019	-.00092	-.00054	.00004	.29997	.00000	.00000
	GRADIENT	.00000	.00000	.00000	.00000	.00000	.00000	.00000	.00000	.00000

RUN NO. 609/ 0 GRADIENT INTERVAL = -5.00/ 5.00

DLT-X	DLT-Z	CN	CA	CLM	CY	CYN	CBL	XCP/L	YCP/L	CPB
400.470	20.018	.00537	.09256	.01117	.00228	-.00034	.00016	-.89494	.00000	.00000
400.480	98.324	.00784	.09305	.03000	.00037	-.00075	.00009	-2.11350	.00000	.00000
400.450	200.020	.02280	.09419	.03612	.00062	-.00179	.00011	-.55834	.00000	.00000
400.440	298.880	.05168	.08275	.02069	-.00126	-.00072	.00005	.27864	.00000	.00000
400.460	398.050	.05405	.08427	.01978	-.00102	-.00062	.00004	.30270	.00000	.00000
400.460	499.510	.05325	.08425	.01979	-.00199	-.00095	.00004	.29865	.00000	.00000
400.550	599.830	.05484	.08552	.02109	-.00103	-.00058	.00004	.28966	.00000	.00000
	GRADIENT	.00000	.00000	.00000	.00000	.00000	.00000	.00000	.00000	.00000

AEDC VA422(IA17) ORB AND ET SEPARATING(ET DATA) (ATR071) (24 JUL 75)

REFERENCE DATA

SREF = 2690.0000 SQ.FT. XMRP = 1380.1000 IN. XT
LREF = 1290.3000 IN. YMRP = .0000 IN. YT
BREF = 1290.3000 IN. ZMRP = 416.4000 IN. ZT
SCALE = .0100

PARAMETRIC DATA

DLT-Y = .000 ALPHA = 5.000
BETA = .000 DLTALF = -10.000
DLTBTA = .000 MACH = 5.930
AILRON = .000 ELEVON = -40.000
GRID = 12.000

RUN NO. 610/ 0 GRADIENT INTERVAL = -5.00/ 5.00

DLT-X	DLT-Z	CN	CA	CLM	CY	CYN	CBL	XCP/L	YCP/L	CPB
.505	401.010	-.09187	.09564	-.00070	.00182	-.00062	.00007	.55299	.00000	.00000
.491	502.650	-.06860	.08883	-.01502	.00091	-.00001	.00003	.40536	.00000	.00000
.525	601.580	-.06930	.08981	-.01534	-.00029	-.00028	.00004	.40373	.00000	.00000
.455	750.070	-.06800	.09192	-.01500	.00048	.00002	.00004	.40425	.00000	.00000
-.547	802.760	-.06958	.09190	-.01556	.00106	.00020	.00003	.40207	.00000	.00000
	GRADIENT	.00000	.00000	.00000	.00000	.00000	.00000	.00000	.00000	.00000

RUN NO. 611/ 0 GRADIENT INTERVAL = -5.00/ 5.00

DLT-X	DLT-Z	CN	CA	CLM	CY	CYN	CBL	XCP/L	YCP/L	CPB
400.460	398.240	-.11643	.10243	.01224	.00207	-.00071	.00005	.63179	.00000	.00000
400.480	497.730	-.07436	.08883	-.01190	.00084	-.00012	.00005	.44651	.00000	.00000
400.520	599.220	-.06745	.09016	-.01464	-.00072	-.00030	.00005	.40665	.00000	.00000
400.520	750.130	-.06629	.09195	-.01455	.00045	-.00017	.00003	.40499	.00000	.00000
400.680	800.210	-.06831	.09268	-.01495	.00029	-.00027	.00003	.40548	.00000	.00000
	GRADIENT	.00000	.00000	.00000	.00000	.00000	.00000	.00000	.00000	.00000

AEDC VA422(IA17) ORB AND ET SEPARATING(ET DATA) (ATR073) (24 JUL 75)

REFERENCE DATA

SREF = 2690.0000 SQ.FT. XMRP = 1380.1000 IN. XT
LREF = 1290.3000 IN. YMRP = .0000 IN. YT
BREF = 1290.3000 IN. ZMRP = 416.4000 IN. ZT
SCALE = .0100

PARAMETRIC DATA

DLT-Y = .000 ALPHA = 5.000
BETA = .000 DLTALF = -20.000
DLTBTA = .000 MACH = 5.930
AILRON = .000 ELEVON = -40.000
GRID = 12.000

RUN NO. 613/ 0 GRADIENT INTERVAL = -5.00/ 5.00

DLT-X	DLT-Z	CN	CA	CLM	CY	CYN	CBL	XCP/L	YCP/L	CPB
.391	801.380	-.22827	.10971	-.03608	.00154	.00035	.00013	.44797	.00000	.00000
.469	900.160	-.22904	.11017	-.03755	.00160	.00047	.00014	.44381	.00000	.00000
.431	1000.100	-.23273	.11168	-.03770	.00166	.00035	.00014	.44518	.00000	.00000
	GRADIENT	.00000	.00000	.00000	.00000	.00000	.00000	.00000	.00000	.00000

AEDC VA422(IA17) ORB AND ET SEPARATING(ET DATA) (ATR073) (24 JUL 75)

REFERENCE DATA

SREF = 2690.0000 SQ.FT. XMRP = 1360.1000 IN. XT
LREF = 1290.3000 IN. YMRP = .0000 IN. YT
BREF = 1290.3000 IN. ZMRP = 416.4000 IN. ZT
SCALE = .0100

PARAMETRIC DATA

DLT-Y = .000 ALPHA = 5.000
BETA = .000 DLTALF = -20.000
DLTBTA = .000 MACH = 5.930
AILRON = .000 ELEVON = -40.000
GRID = 12.000

RUN NO. 612/ 0 GRADIENT INTERVAL = -5.00/ 5.00

DLT-X	DLT-Z	CN	CA	CLM	CY	CYN	CBL	XCP/L	YCP/L	CPB
400.570	750.220	-.23385	.10843	-.03224	.00158	.00018	.00013	.46201	.00000	.00000
400.500	800.120	-.22778	.10987	-.03582	.00161	.00029	.00013	.44847	.00000	.00000
400.420	900.150	-.22905	.11154	-.03750	.00093	.00013	.00014	.44396	.00000	.00000
400.580	1000.200	-.23206	.11081	-.03879	.00036	.00004	.00015	.44155	.00000	.00000
	GRADIENT	.00000	.00000	.00000	.00000	.00000	.00000	.00000	.00000	.00000

AEDC VA422(IA17) ORB AND ET SEPARATING(ET DATA) (ATR074) (24 JUL 75)

REFERENCE DATA

SREF = 2690.0000 SQ.FT. XMRP = 1360.1000 IN. XT
LREF = 1290.3000 IN. YMRP = .0000 IN. YT
BREF = 1290.3000 IN. ZMRP = 416.4000 IN. ZT
SCALE = .0100

PARAMETRIC DATA

DLT-Y = .000 ALPHA = -5.000
BETA = .000 DLTALF = .000
DLTBTA = .000 MACH = 5.930
AILRON = .000 ELEVON = -40.000
GRID = 11.000

RUN NO. 621/ 0 GRADIENT INTERVAL = -5.00/ 5.00

DLT-X	DLT-Z	CN	CA	CLM	CY	CYN	CBL	XCP/L	YCP/L	CPB
.531	19.398	-.09813	.09368	-.01460	.00383	.00019	.00025	.45442	.00000	.00000
.485	101.480	-.09245	.09469	-.01074	.00372	-.00008	.00010	.47720	.00000	.00000
.528	201.740	-.08456	.09859	-.00813	.00223	.00001	.00001	.49114	.00000	.00000
.444	301.320	-.07843	.09562	-.01387	.00135	-.00020	.00005	.43482	.00000	.00000
.627	400.170	-.07411	.09398	-.01733	.00139	-.00006	.00002	.39499	.00000	.00000
.466	500.230	-.07501	.09238	-.01849	.00172	-.00001	.00001	.38611	.00000	.00000
.491	600.130	-.07453	.09087	-.01748	.00084	-.00042	.00002	.39448	.00000	.00000
	GRADIENT	.00000	.00000	.00000	.00000	.00000	.00000	.00000	.00000	.00000

RUN NO. 622/ 0 GRADIENT INTERVAL = -5.00/ 5.00

DLT-X	DLT-Z	CN	CA	CLM	CY	CYN	CBL	XCP/L	YCP/L	CPB
400.470	24.066	-.10169	.09229	-.02766	.00365	-.00021	.00018	.36829	.00000	.00000
400.420	100.170	-.09456	.09489	-.01305	.00165	.00007	.00004	.46196	.00000	.00000
400.400	197.820	-.08044	.09408	-.01295	.00245	.00005	.00002	.44584	.00000	.00000
400.400	298.210	-.08098	.09795	-.00965	.00203	-.00021	.00005	.47505	.00000	.00000
400.480	400.030	-.09237	.09682	-.01312	.00128	-.00084	.00008	.44707	.00000	.00000
400.430	500.200	-.07520	.09243	-.01780	.00175	-.00012	.00003	.39298	.00000	.00000
400.480	600.200	-.07304	.09221	-.01799	.00072	-.00041	.00004	.38624	.00000	.00000
	GRADIENT	.00000	.00000	.00000	.00000	.00000	.00000	.00000	.00000	.00000

AEDC VA422(IA17) ORB AND ET SEPARATING(ET DATA) (ATR075) (24 JUL 75)

REFERENCE DATA

SREF = 2690.0000 SQ.FT. XMRP = 1380.1000 IN. XT
LREF = 1290.3000 IN. YMRP = .0000 IN. YT
BREF = 1290.3000 IN. ZMRP = 416.4000 IN. ZT
SCALE = .0100

PARAMETRIC DATA

DLT-Y = .000 ALPHA = -5.000
BETA = .000 DLTALF = -10.000
DLTBTA = .000 MACH = 5.930
AILRON = .000 ELEVON = -40.000
GRID = 11.000

RUN NO. 623/ 0 GRADIENT INTERVAL = -5.00/ 5.00

DLT-X	DLT-Z	CN	CA	CLM	CY	CYN	CBL	XCP/L	YCP/L	CPB
.522	403.880	-.26589	.12601	-.02156	.00444	-.00068	.00023	.50169	.00000	.00000
.429	500.940	-.25612	.12069	-.02819	.00317	-.00060	.00025	.48146	.00000	.00000
.453	600.360	-.23854	.10933	-.03787	.00219	.00009	.00015	.44742	.00000	.00000
.433	750.160	-.23530	.10917	-.03601	.00299	.00013	.00017	.45144	.00000	.00000
.085	800.290	-.23560	.10948	-.03584	.00299	.00027	.00018	.45207	.00000	.00000
	GRADIENT	.00000	.00000	.00000	.00000	.00000	.00000	.00000	.00000	.00000

RUN NO. 624/ 0 GRADIENT INTERVAL = -5.00/ 5.00

DLT-X	DLT-Z	CN	CA	CLM	CY	CYN	CBL	XCP/L	YCP/L	CPB
400.530	397.080	-.24000	.10941	-.04030	.00292	.00079	.00018	.44101	.00000	.00000
400.430	499.620	-.25450	.11634	-.03102	.00362	.00035	.00016	.47319	.00000	.00000
400.360	599.970	-.25636	.11966	-.02625	.00330	-.00077	.00034	.48679	.00000	.00000
400.430	750.190	-.23584	.10891	-.03670	.00276	.00019	.00018	.44962	.00000	.00000
400.380	800.250	-.23641	.10838	-.03658	.00258	.00028	.00017	.45024	.00000	.00000
	GRADIENT	.00000	.00000	.00000	.00000	.00000	.00000	.00000	.00000	.00000

AEDC VA422(IA17) ORB AND ET SEPARATING(ET DATA) (ATR077) (24 JUL 75)

REFERENCE DATA

SREF = 2690.0000 SQ.FT. XMRP = 1360.1000 IN. XT
LREF = 1290.3000 IN. YMRP = .0000 IN. YT
BREF = 1290.3000 IN. ZMRP = 416.4000 IN. ZT
SCALE = .0100

PARAMETRIC DATA

DLT-Y = .000 ALPHA = -5.000
BETA = .000 DLTALF = -20.000
DLTBTA = .000 MACH = 5.930
AILRON = .000 ELEVON = -40.000
GRID = 11.000

RUN NO. 626/ 0 GRADIENT INTERVAL = -5.00/ 5.00

DLT-X	DLT-Z	CN	CA	CLM	CY	CYN	CBL	XCP/L	YCP/L	CPB
.441	804.450	-.50584	.14893	-.02148	.00645	-.00049	.00045	.52868	.00000	.00000
.403	900.810	-.48384	.14701	-.03287	.00694	-.00035	.00048	.51088	.00000	.00000
.477	1000.300	-.48118	.14578	-.03279	.00892	-.00035	.00047	.51073	.00000	.00000
	GRADIENT	.00000	.00000	.00000	.00000	.00000	.00000	.00000	.00000	.00000

AEDC VA422(IA17) ORB AND ET SEPARATING(ET DATA) (ATR077) (24 JUL 75)

REFERENCE DATA

SREF = 2690.0000 SQ.FT. XMRP = 1360.1000 IN. XT
LREF = 1290.3000 IN. YMRP = .0000 IN. YT
BREF = 1290.3000 IN. ZMRP = 416.4000 IN. ZT
SCALE = .0100

PARAMETRIC DATA

DLT-Y = .000 ALPHA = -5.000
BETA = .000 DLTALF = -20.000
DLTBTA = .000 MACH = 5.930
AILRON = .000 ELEVON = -40.000
GRID = 11.000

RUN NO. 625/ 0 GRADIENT INTERVAL = -5.00/ 5.00

DLT-X	DLT-Z	CN	CA	CLM	CY	CYN	CBL	XCP/L	YCP/L	CPB
400.420	750.960	-.51688	.15829	-.01615	.00711	-.00034	.00043	.53651	.00000	.00000
400.490	800.510	-.50761	.15845	-.01975	.00555	-.00090	.00089	.53116	.00000	.00000
400.380	900.320	-.49397	.14964	-.02477	.00630	-.00044	.00045	.52331	.00000	.00000
400.420	1000.400	-.47724	.14472	-.03404	.00731	-.00035	.00044	.50850	.00000	.00000
	GRADIENT	.00000	.00000	.00000	.00000	.00000	.00000	.00000	.00000	.00000

AEDC VA422(IA17) ORB AND ET SEPARATING(ET DATA) (ATR078) (24 JUL 75)

REFERENCE DATA

SREF = 2690.0000 SQ.FT. XMRP = 1360.1000 IN. XT
LREF = 1290.3000 IN. YMRP = .0000 IN. YT
BREF = 1290.3000 IN. ZMRP = 416.4000 IN. ZT
SCALE = .0100

PARAMETRIC DATA

DLT-Y = .000 ALPHA = -10.000
BETA = .000 DLTALF = .000
DLTBTA = .000 MACH = 5.930
AILRON = .000 ELEVON = -40.000
GRID = 10.000

RUN NO. 634/ 0 GRADIENT INTERVAL = -5.00/ 5.00

DLT-X	DLT-Z	CN	CA	CLM	CY	CYN	CBL	XCP/L	YCP/L	CPB
.415	31.163	-.17004	.10271	-.03169	.00366	.00036	.00032	.42812	.00000	.00000
.566	102.620	-.16475	.10291	-.02837	.00220	.00017	.00013	.43806	.00000	.00000
.506	202.190	-.16071	.10206	-.02762	.00134	-.00002	.00006	.43827	.00000	.00000
.389	300.650	-.16497	.10735	-.02095	.00158	-.00054	.00006	.46963	.00000	.00000
.406	400.140	-.15058	.09724	-.02731	.00180	.00018	.00005	.43162	.00000	.00000
.596	500.300	-.14721	.09780	-.02852	.00085	.00006	.00003	.42300	.00000	.00000
	GRADIENT	.00000	.00000	.00000	.00000	.00000	.00000	.00000	.00000	.00000

RUN NO. 635/ 0 GRADIENT INTERVAL = -5.00/ 5.00

DLT-X	DLT-Z	CN	CA	CLM	CY	CYN	CBL	XCP/L	YCP/L	CPB
400.490	31.587	-.15504	.09680	-.04363	.00362	.00038	.00019	.36173	.00000	.00000
400.430	97.783	-.15475	.10251	-.03232	.00118	.00012	.00006	.41241	.00000	.00000
400.520	197.220	-.14408	.09731	-.03770	.00189	.00015	.00014	.37555	.00000	.00000
400.430	298.840	-.15422	.09920	-.03086	.00176	.00019	.00007	.41855	.00000	.00000
400.420	399.780	-.15951	.10276	-.02352	.00080	-.00018	.00002	.45534	.00000	.00000
400.430	500.100	-.15778	.10204	-.02333	.00178	-.00038	.00011	.45505	.00000	.00000
	GRADIENT	.00000	.00000	.00000	.00000	.00000	.00000	.00000	.00000	.00000

ORIGINAL PAGE IS OF POOR QUALITY

AEDC VA422(IA17) ORB AND ET SEPARATING(ET DATA) (ATR079) (24 JUL 75)

REFERENCE DATA

SREF = 2690.0000 SQ.FT. XMRP = 1380.1000 IN. XT
LREF = 1290.3000 IN. YMRP = .0000 IN. YT
BREF = 1290.3000 IN. ZMRP = 416.4000 IN. ZT
SCALE = .0100

PARAMETRIC DATA

DLT-Y = .000 ALPHA = -10.000
BETA = .000 DLTALF = -10.000
DLTBTA = .000 MACH = 5.930
AILRON = .000 ELEVON = -40.000
GRID = 10.000

RUN NO. 636/ 0 GRADIENT INTERVAL = -5.00/ 5.00

DLT-X	DLT-Z	CN	CA	CLM	CY	CYN	CBL	XCP/L	YCP/L	CPB
.428	403.290	-.35805	.12317	-.03973	.00353	.00042	.00035	.48081	.00000	.00000
.370	501.650	-.37400	.13700	-.02437	.00521	-.00039	.00026	.51282	.00000	.00000
.407	600.420	-.36787	.13384	-.02521	.00467	-.00101	.00033	.51046	.00000	.00000
.393	700.270	-.34951	.12390	-.03571	.00542	-.00019	.00028	.48697	.00000	.00000
.523	799.800	-.34660	.12485	-.03578	.00432	-.00038	.00030	.48622	.00000	.00000
	GRADIENT	.00000	.00000	.00000	.00000	.00000	.00000	.00000	.00000	.00000

RUN NO. 637/ 0 GRADIENT INTERVAL = -5.00/ 5.00

DLT-X	DLT-Z	CN	CA	CLM	CY	CYN	CBL	XCP/L	YCP/L	CPB
400.350	397.450	-.32243	.11132	-.06160	.00293	.00081	.00029	.42487	.00000	.00000
400.240	499.400	-.34382	.11828	-.04668	.00240	.00033	.00033	.46344	.00000	.00000
400.240	600.180	-.36026	.12645	-.03248	.00296	.00021	.00027	.49536	.00000	.00000
400.330	700.270	-.37029	.13454	-.02376	.00523	-.00095	.00047	.51352	.00000	.00000
400.390	800.120	-.35586	.12572	-.03141	.00530	-.00045	.00031	.49668	.00000	.00000
	GRADIENT	.00000	.00000	.00000	.00000	.00000	.00000	.00000	.00000	.00000

AEDC VA422(IA17) ORB AND ET SEPARATING(ET DATA) (ATR080) (24 JUL 75)

REFERENCE DATA

SREF = 2690.0000 SQ.FT. XMRP = 1360.1000 IN. XT
LREF = 1290.3000 IN. YMRP = .0000 IN. YT
BREF = 1290.3000 IN. ZMRP = 416.4000 IN. ZT
SCALE = .0100

PARAMETRIC DATA

DLT-Y = .000 ALPHA = .000
BETA = 3.000 DLTALF = .000
DLTBTA = .000 MACH = 5.930
AILRON = 15.000 ELEVON = .000
GRID = 14.000

RUN NO. 462/ 0 GRADIENT INTERVAL = -5.00/ 5.00

DLT-X	DLT-Z	CN	CA	CLM	CY	CYN	CBL	XCP/L	YCP/L	CPB
.531	18.931	-.04172	.09172	.00749	-.03867	-.01065	.00047	.68376	.36589	.00000
.636	99.553	-.03530	.09071	.00755	-.03628	-.01083	.00044	.70786	.34978	.00000
.592	200.480	-.02510	.09356	.01111	-.03576	-.01276	.00020	.86770	.30906	.00000
.519	301.990	-.01037	.08705	.00140	-.03696	-.01235	.00033	.65264	.32489	.00000
.515	401.030	-.00978	.08810	.00199	-.03676	-.01245	.00035	.70073	.32164	.00000
.620	500.150	-.00992	.08888	.00219	-.03862	-.01322	.00036	.71275	.31918	.00000
.734	597.020	-.01117	.08939	.00146	-.03888	-.01386	.00037	.64981	.30927	.00000
	GRADIENT	.00000	.00000	.00000	.00000	.00000	.00000	.00000	.00000	.00000

AEDC VA422(IA17) ORB AND ET SEPARATING(ET DATA) (ATR081) (24 JUL 75)

REFERENCE DATA

SREF = 2690.0000 SQ.FT. XMRP = 1360.1000 IN. XT
LREF = 1290.3000 IN. YMRP = .0000 IN. YT
BREF = 1290.3000 IN. ZMRP = 416.4000 IN. ZT
SCALE = .0100

PARAMETRIC DATA

DLT-Y = .000 ALPHA = .000
BETA = 3.000 DLTALF = -10.000
DLTBTA = .000 MACH = 5.930
AILRON = 15.000 ELEVON = .000
GRID = 14.000

RUN NO. 463/ 0 GRADIENT INTERVAL = -5.00/ 5.00

DLT-X	DLT-Z	CN	CA	CLM	CY	CYN	CBL	XCP/L	YCP/L	CPB
.562	403.700	-.16689	.10863	-.01230	-.03685	-.01111	.00039	.50680	.34771	.00000
.571	501.630	-.14641	.09889	-.02514	-.03869	-.01091	.00030	.43840	.36126	.00000
.564	600.250	-.14569	.09992	-.02763	-.04085	-.01109	.00035	.42584	.36876	.00000
.612	750.090	-.14822	.10072	-.02790	-.04087	-.01162	.00037	.42683	.35966	.00000
-.253	802.070	-.14798	.10121	-.02768	-.04130	-.01127	.00036	.42768	.36776	.00000
	GRADIENT	.00000	.00000	.00000	.00000	.00000	.00000	.00000	.00000	.00000

AEDC VA422(IA17) ORB AND ET SEPARATING(ET DATA) (ATR082) (24 JUL 75)

REFERENCE DATA

SREF = 2690.0000 SQ.FT. XMRP = 1360.1000 IN. XT
LREF = 1290.3000 IN. YMRP = .0000 IN. YT
BREF = 1290.3000 IN. ZMRP = 416.4000 IN. ZT
SCALE = .0100

PARAMETRIC DATA

DLT-Y = .000 ALPHA = .000
BETA = 3.000 DLTALF = -20.000
DLTBTA = .000 MACH = 5.930
AILRON = 15.000 ELEVON = .000
GRID = 14.000

RUN NO. 464/ 0 GRADIENT INTERVAL = -5.00/ 5.00

DLT-X	DLT-Z	CN	CA	CLM	CY	CYN	CBL	XCP/L	YCP/L	CPB
.514	801.770	-.38949	.13966	-.04250	-.05835	-.00945	.00034	.48211	.44522	.00000
.565	900.440	-.39194	.14052	-.04119	-.05844	-.00897	.00036	.48493	.45110	.00000
.531	1000.300	-.39229	.14029	-.03974	-.05624	-.00846	.00032	.48758	.45323	.00000
	GRADIENT	.00000	.00000	.00000	.00000	.00000	.00000	.00000	.00000	.00000

AEDC VA422(IA17) ORB AND ET SEPARATING(ET DATA) (ATR083) (24 JUL 75)

REFERENCE DATA

SREF = 2690.0000 SQ.FT. XMRP = 1360.1000 IN. XT
LREF = 1290.3000 IN. YMRP = .0000 IN. YT
BREF = 1290.3000 IN. ZMRP = 416.4000 IN. ZT
SCALE = .0100

PARAMETRIC DATA

DLT-Y = .000 ALPHA = .000
BETA = .000 DLTALF = .000
DLTBTA = .000 MACH = 5.930
AILRON = 15.000 ELEVON = .000
GRID = 13.000

RUN NO. 469/ 0 GRADIENT INTERVAL = -5.00/ 5.00

DLT-X	DLT-Z	CN	CA	CLM	CY	CYN	CBL	XCP/L	YCP/L	CPB
.443	18.984	-.03832	.09150	.00658	.00121	.00020	.00025	.67825	.00000	.00000
.520	99.559	-.03309	.09081	.00722	.00150	-.00028	.00011	.71085	.00000	.00000
.531	200.450	-.02353	.09239	.01067	.00099	-.00030	.00012	.87520	.00000	.00000
.459	302.010	-.00827	.08649	.00170	-.00059	-.00051	.00008	.70200	.00000	.00000
.470	400.890	-.00684	.08889	.00267	.00068	-.00010	.00007	.83112	.00000	.00000
.526	500.150	-.00889	.09009	.00207	.00045	-.00003	.00007	.72088	.00000	.00000
.504	600.130	-.01041	.09032	.00145	-.00029	-.00012	.00008	.65575	.00000	.00000
	GRADIENT	.00000	.00000	.00000	.00000	.00000	.00000	.00000	.00000	.00000

RUN NO. 470/ 0 GRADIENT INTERVAL = -5.00/ 5.00

DLT-X	DLT-Z	CN	CA	CLM	CY	CYN	CBL	XCP/L	YCP/L	CPB
400.530	19.913	-.04619	.09231	-.00741	.00451	-.00037	.00021	.44630	.61511	.00000
400.500	97.901	-.04038	.09287	.00808	.00129	-.00024	.00011	.69773	.00000	.00000
400.540	198.970	-.02838	.09080	.01107	.00014	-.00039	.00006	.83096	.00000	.00000
400.470	297.780	-.01642	.08979	.00735	-.00028	-.00042	.00008	.87102	.00000	.00000
400.500	399.100	-.00705	.08788	.00294	.00028	-.00028	.00008	.84964	.00000	.00000
400.430	500.070	-.00900	.08958	.00283	-.00115	-.00059	.00010	.77822	.00000	.00000
400.470	600.160	-.00855	.09123	.00129	-.00053	-.00030	.00008	.66395	.00000	.00000
	GRADIENT	.00000	.00000	.00000	.00000	.00000	.00000	.00000	.00000	.00000

AEDC VA422(IA17) ORB AND ET SEPARATING(ET DATA) (ATR084) (24 JUL 75)

REFERENCE DATA

SREF = 2690.0000 SQ.FT. XMRP = 1360.1000 IN. XT
LREF = 1290.3000 IN. YMRP = .0000 IN. YT
BREF = 1290.3000 IN. ZMRP = 416.4000 IN. ZT
SCALE = .0100

PARAMETRIC DATA

DLT-Y = .000 ALPHA = .000
BETA = .000 DLTALF = -10.000
DLTBTA = .000 MACH = 5.930
AILRON = 15.000 ELEVON = .000
GRID = 13.000

RUN NO. 471/ 0 GRADIENT INTERVAL = -5.00/ 5.00

DLT-X	DLT-Z	CN	CA	CLM	CY	CYN	CBL	XCP/L	YCP/L	CPB
.586	403.580	-.16331	.10877	-.01227	.00262	-.00082	.00013	.50585	.00000	.00000
.476	501.670	-.14263	.09844	-.02613	.00190	.00047	.00007	.43033	.00000	.00000
.540	600.310	-.14221	.10021	-.02914	.00153	.00042	.00006	.41518	.00000	.00000
.603	750.020	-.14525	.09961	-.02991	-.00049	-.00018	.00009	.41446	.00000	.00000
-.150	802.260	-.14565	.09930	-.03037	.00016	.00006	.00006	.41266	.00000	.00000
	GRADIENT	.00000	.00000	.00000	.00000	.00000	.00000	.00000	.00000	.00000

RUN NO. 472/ 0 GRADIENT INTERVAL = -5.00/ 5.00

DLT-X	DLT-Z	CN	CA	CLM	CY	CYN	CBL	XCP/L	YCP/L	CPB
400.410	355.820	-.16744	.10725	-.01150	.00127	-.00025	.00004	.51034	.00000	.00000
400.410	498.550	-.15740	.10738	-.01588	.00233	-.00052	.00012	.48794	.00000	.00000
400.450	600.170	-.14170	.09986	-.02749	.00089	.00034	.00006	.42282	.00000	.00000
400.470	750.320	-.14621	.10027	-.03040	.00017	-.00004	.00008	.41308	.00000	.00000
400.490	800.140	-.14587	.09942	-.03005	.00064	.00013	.00007	.41441	.00000	.00000
	GRADIENT	.00000	.00000	.00000	.00000	.00000	.00000	.00000	.00000	.00000

AEDC VA422(IA17) ORB AND ET SEPARATING(ET DATA) (ATR086) (24 JUL 75)

REFERENCE DATA

SREF = 2690.0000 SQ.FT. XMRP = 1360.1000 IN. XT
LREF = 1290.3000 IN. YMRP = .0000 IN. YT
BREF = 1290.3000 IN. ZMRP = 416.4000 IN. ZT
SCALE = .0100

PARAMETRIC DATA

DLT-Y = .000 ALPHA = .000
BETA = .000 DLTALF = -20.000
DLTBTA = .000 MACH = 5.930
AILRON = 15.000 ELEVON = .000
GRID = 13.000

RUN NO. 479/ 0 GRADIENT INTERVAL = -5.00/ 5.00

DLT-X	DLT-Z	CN	CA	CLM	CY	CYN	CBL	XCP/L	YCP/L	CPB
.463	802.100	-.34371	.12482	-.04122	.00333	-.00048	.00032	.47455	.00000	.00000
.435	900.520	-.34454	.12308	-.04122	.00462	-.00008	.00037	.47476	.00000	.00000
.403	1000.200	-.34559	.12400	-.03883	.00389	-.00028	.00038	.47985	.00000	.00000
	GRADIENT	.00000	.00000	.00000	.00000	.00000	.00000	.00000	.00000	.00000

ORIGINAL PAGE IS OF POOR QUALITY

AEDC VA422(1A17) ORB AND ET SEPARATING(ET DATA) (ATR086) (24 JUL 75)

REFERENCE DATA

SREF = 2690.0000 SQ.FT. XMRP = 1360.1000 IN. XT
LREF = 1290.3000 IN. YMRP = .0000 IN. YT
BREF = 1290.3000 IN. ZMRP = 416.4000 IN. ZT
SCALE = .0100

PARAMETRIC DATA

DLT-Y = .000 ALPHA = .000
BETA = .000 DLTALF = -20.000
DLTBTA = .000 MACH = 5.930
AILRON = 15.000 ELEVON = .000
GRID = 13.000

RUN NO. 473/ 0 GRADIENT INTERVAL = -5.00/ 5.00

DLT-X	DLT-Z	CN	CA	CLM	CY	CYN	CBL	XCP/L	YCP/L	CPB
400.380	750.210	-.37249	.13908	-.02382	.00427	-.00123	.00039	.51404	.00000	.00000
400.410	800.250	-.36144	.13038	-.03161	.00393	-.00051	.00032	.49724	.00000	.00000
400.320	900.470	-.34525	.12561	-.03976	.00440	-.00026	.00037	.47789	.00000	.00000
400.290	1000.400	-.34549	.12598	-.03791	.00388	-.00030	.00038	.48167	.00000	.00000
	GRADIENT	.00000	.00000	.00000	.00000	.00000	.00000	.00000	.00000	.00000

AEDC VA422(1A17) ORB AND ET SEPARATING(ET DATA) (ATR087) (24 JUL 75)

REFERENCE DATA

SREF = 2690.0000 SQ.FT. XMRP = 1360.1000 IN. XT
LREF = 1290.3000 IN. YMRP = .0000 IN. YT
BREF = 1290.3000 IN. ZMRP = 416.4000 IN. ZT
SCALE = .0100

PARAMETRIC DATA

DLT-Y = .000 ALPHA = 5.000
BETA = .000 DLTALF = .000
DLTBTA = .000 MACH = 5.930
AILRON = 15.000 ELEVON = .000
GRID = 12.000

RUN NO. 482/ 0 GRADIENT INTERVAL = -5.00/ 5.00

DLT-X	DLT-Z	CN	CA	CLM	CY	CYN	CBL	XCP/L	YCP/L	CPB
.550	19.283	.01423	.09127	.02859	-.00111	-.00070	.00016	-.84573	.00000	.00000
.580	98.334	.02123	.09137	.02891	-.00112	-.00106	.00006	-.39331	.00000	.00000
.563	199.080	.03586	.08950	.02879	-.00072	-.00145	.00010	-.00246	.00000	.00000
.492	300.170	.05246	.08435	.01962	-.00188	-.00098	.00007	.29708	.00000	.00000
.545	402.010	.05282	.08500	.01946	-.00259	-.00110	.00008	.30089	.00000	.00000
.632	501.120	.05326	.08494	.01928	-.00130	-.00079	.00006	.30548	.00000	.00000
.677	598.440	.05407	.08589	.02005	-.00206	-.00083	.00007	.29923	.00000	.00000
	GRADIENT	.00000	.00000	.00000	.00000	.00000	.00000	.00000	.00000	.00000

RUN NO. 483/ 0 GRADIENT INTERVAL = -5.00/ 5.00

DLT-X	DLT-Z	CN	CA	CLM	CY	CYN	CBL	XCP/L	YCP/L	CPB
400.510	19.977	.00471	.09308	.01198	.00020	-.00135	.00017	-1.21870	.00000	.00000
400.440	98.438	.00794	.09387	.03043	-.00025	-.00091	.00013	-2.12020	.00000	.00000
400.500	200.100	.02311	.09483	.03547	-.00021	-.00198	.00014	-.51392	.00000	.00000
400.540	298.830	.05107	.08339	.02053	-.00174	-.00082	.00007	.27743	.00000	.00000
400.480	398.110	.05364	.08453	.01971	-.00197	-.00097	.00008	.30168	.00000	.00000
400.530	499.470	.05328	.08484	.01977	-.00281	-.00110	.00008	.29898	.00000	.00000
400.630	599.930	.05358	.08575	.02093	-.00286	-.00119	.00009	.28543	.00000	.00000
	GRADIENT	.00000	.00000	.00000	.00000	.00000	.00000	.00000	.00000	.00000

AEDC VA422(IA17) ORB AND ET SEPARATING(ET DATA) (ATR088) (24 JUL 75)

REFERENCE DATA

SREF = 2690.0000 SQ.FT. XMRP = 1360.1000 IN. XT
LREF = 1290.3000 IN. YMRP = .0000 IN. YT
BREF = 1290.3000 IN. ZMRP = 416.4000 IN. ZT
SCALE = .0100

PARAMETRIC DATA

DLT-Y = .000 ALPHA = 5.000
BETA = .000 DLTALF = -10.000
DLTBTA = .000 MACH = 5.930
AILRON = 15.000 ELEVON = .000
GRID = 12.000

RUN NO. 484/ 0 GRADIENT INTERVAL = -5.00/ 5.00

DLT-X	DLT-Z	CN	CA	CLM	CY	CYN	CBL	XCP/L	YCP/L	CPB
.464	401.000	-.09096	.09604	-.00135	.00146	-.00071	.00008	.54798	.00000	.00000
.436	502.680	-.06825	.08933	-.01512	-.00005	-.00032	.00006	.40357	.00000	.00000
.479	601.680	-.06853	.09034	-.01548	-.00028	-.00040	.00007	.40057	.00000	.00000
.574	750.090	-.06775	.09182	-.01507	-.00001	-.00031	.00007	.40290	.00000	.00000
-.719	803.270	-.07025	.09186	-.01563	.00029	-.00013	.00006	.40289	.00000	.00000
	GRADIENT	.00000	.00000	.00000	.00000	.00000	.00000	.00000	.00000	.00000

RUN NO. 485/ 0 GRADIENT INTERVAL = -5.00/ 5.00

DLT-X	DLT-Z	CN	CA	CLM	CY	CYN	CBL	XCP/L	YCP/L	CPB
400.440	398.400	-.11660	.10269	.01187	.00229	-.00077	.00006	.62944	.00000	.00000
400.550	497.710	-.07298	.08874	-.01220	-.00055	-.00051	.00008	.44153	.00000	.00000
400.470	599.170	-.06987	.09043	-.01456	.00037	-.00025	.00006	.41279	.00000	.00000
400.620	750.030	-.06865	.09245	-.01461	.00100	-.00004	.00005	.40970	.00000	.00000
400.610	800.130	-.07016	.09345	-.01499	.00122	-.00003	.00005	.40909	.00000	.00000
	GRADIENT	.00000	.00000	.00000	.00000	.00000	.00000	.00000	.00000	.00000

AEDC VA422(IA17) ORB AND ET SEPARATING(ET DATA) (ATR090) (24 JUL 75)

REFERENCE DATA

SREF = 2690.0000 SQ.FT. XMRP = 1360.1000 IN. XT
LREF = 1290.3000 IN. YMRP = .0000 IN. YT
BREF = 1290.3000 IN. ZMRP = 416.4000 IN. ZT
SCALE = .0100

PARAMETRIC DATA

DLT-Y = .000 ALPHA = 5.000
BETA = .000 DLTALF = -20.000
DLTBTA = .000 MACH = 5.930
AILRON = 15.000 ELEVON = .000
GRID = 12.000

RUN NO. 492/ 0 GRADIENT INTERVAL = -5.00/ 5.00

DLT-X	DLT-Z	CN	CA	CLM	CY	CYN	CBL	XCP/L	YCP/L	CPB
.340	801.510	-.22783	.11005	-.03610	.00057	.00023	.00017	.44763	.00000	.00000
.489	900.210	-.23027	.10993	-.03753	.00191	.00028	.00016	.44447	.00000	.00000
.394	1000.200	-.23345	.11099	-.03781	.00195	.00025	.00017	.44580	.00000	.00000
	GRADIENT	.00000	.00000	.00000	.00000	.00000	.00000	.00000	.00000	.00000

AEDC VA422(IA17) ORB AND ET SEPARATING(ET DATA) (ATR090) (24 JUL 75)

REFERENCE DATA

SREF = 2690.0000 SQ.FT. XMRP = 1360.1000 IN. XT
LREF = 1290.3000 IN. YMRP = .0000 IN. YT
BREF = 1290.3000 IN. ZMRP = 416.4000 IN. ZT
SCALE = .0100

PARAMETRIC DATA

DLT-Y = .000 ALPHA = 5.000
BETA = .000 DLTALF = -20.000
DLTBTA = .000 MACH = 5.930
AILRON = 15.000 ELEVON = .000
GRID = 12.000

RUN NO. 486/ 0 GRADIENT INTERVAL = -5.00/ 5.00

DLT-X	DLT-Z	CN	CA	CLM	CY	CYN	CBL	XCP/L	YCP/L	CPB
400.490	750.280	-.23325	.10969	-.03252	.00014	-.00008	.00016	.46094	.00000	.00000
400.460	800.100	-.22744	.11043	-.03596	.00180	.00018	.00016	.44789	.00000	.00000
400.370	900.240	-.22962	.11176	-.03754	.00038	.00007	.00016	.44413	.00000	.00000
400.500	1000.200	-.23290	.11186	-.03873	.00072	.00002	.00017	.44215	.00000	.00000
	GRADIENT	.00000	.00000	.00000	.00000	.00000	.00000	.00000	.00000	.00000

AEDC VA422(IA17) ORB AND ET SEPARATING(ET DATA) (ATR091) (24 JUL 75)

REFERENCE DATA

SREF = 2690.0000 SQ.FT. XMRP = 1360.1000 IN. XT
LREF = 1290.3000 IN. YMRP = .0000 IN. YT
BREF = 1290.3000 IN. ZMRP = 416.4000 IN. ZT
SCALE = .0100

PARAMETRIC DATA

DLT-Y = .000 ALPHA = -5.000
BETA = .000 DLTALF = .000
DLTBTA = .000 MACH = 5.930
AILRON = 15.000 ELEVON = .000
GRID = 11.000

RUN NO. 495/ 0 GRADIENT INTERVAL = -5.00/ 5.00

DLT-X	DLT-Z	CN	CA	CLM	CY	CYN	CBL	XCP/L	YCP/L	CPB
.536	19.362	-.09673	.09397	-.01436	.00312	.00019	.00030	.45460	.00000	.00000
.493	101.340	-.09115	.09543	-.01063	.00287	-.00021	.00013	.47688	.00000	.00000
.497	201.770	-.08390	.09922	-.00798	.00088	-.00012	.00004	.49190	.00000	.00000
.487	301.250	-.07729	.09550	-.01381	.00131	.00006	.00007	.43352	.00000	.00000
.413	400.210	-.07224	.09406	-.01713	.00001	-.00009	.00006	.39265	.00000	.00000
.545	500.170	-.07375	.09275	-.01837	.00085	-.00010	.00005	.38437	.00000	.00000
.548	600.190	-.07334	.09083	-.01743	.00131	-.00002	.00005	.39230	.00000	.00000
	GRADIENT	.00000	.00000	.00000	.00000	.00000	.00000	.00000	.00000	.00000

RUN NO. 496/ 0 GRADIENT INTERVAL = -5.00/ 5.00

DLT-X	DLT-Z	CN	CA	CLM	CY	CYN	CBL	XCP/L	YCP/L	CPB
400.380	20.070	-.09771	.09266	-.02750	.00316	-.00025	.00021	.36173	.00000	.00000
400.500	100.130	-.09222	.09469	-.01300	.00183	.00035	.00008	.45989	.00000	.00000
400.450	197.810	-.08002	.09377	-.01274	.00093	-.00017	.00006	.44710	.00000	.00000
400.490	298.140	-.07730	.09897	-.00966	-.00071	-.00070	.00010	.47106	.00000	.00000
400.500	400.040	-.07888	.09710	-.01310	.00106	-.00050	.00010	.44235	.00000	.00000
400.470	500.200	-.07418	.09253	-.01772	.00083	-.00001	.00006	.39147	.00000	.00000
400.510	600.120	-.07358	.09171	-.01775	.00021	-.00047	.00006	.38973	.00000	.00000
	GRADIENT	.00000	.00000	.00000	.00000	.00000	.00000	.00000	.00000	.00000

AEDC VA422(IA17) ORB AND ET SEPARATING(ET DATA) (ATR092) (24 JUL 75)

REFERENCE DATA

SREF = 2690.0000 SQ.FT. XMRP = 1360.1000 IN. XT
LREF = 1290.3000 IN. YMRP = .0000 IN. YT
BREF = 1290.3000 IN. ZMRP = 416.4000 IN. ZT
SCALE = .0100

PARAMETRIC DATA

DLT-Y = .000 ALPHA = -5.000
BETA = .000 DLTALF = -10.000
DLTBTA = .000 MACH = 5.930
AILRON = 15.000 ELEVON = .000
GRID = 11.000

RUN NO. 497/ 0 GRADIENT INTERVAL = -5.00/ 5.00

DLT-X	DLT-Z	CN	CA	CLM	CY	CYN	CBL	XCP/L	YCP/L	CPB
.401	404.090	-.26508	.12662	-.02117	.00261	-.00072	.00027	.50254	.00000	.00000
.418	500.930	-.25372	.12031	-.02823	.00195	-.00068	.00028	.48062	.00000	.00000
.505	600.300	-.23867	.10985	-.03779	.00160	.00004	.00018	.44771	.00000	.00000
.493	750.310	-.23485	.10994	-.03593	.00192	.00013	.00019	.45146	.00000	.00000
.137	801.370	-.23398	.10980	-.03581	.00103	.00003	.00021	.45141	.00000	.00000
	GRADIENT	.00000	.00000	.00000	.00000	.00000	.00000	.00000	.00000	.00000

RUN NO. 498/ 0 GRADIENT INTERVAL = -5.00/ 5.00

DLT-X	DLT-Z	CN	CA	CLM	CY	CYN	CBL	XCP/L	YCP/L	CPB
400.440	397.020	-.24210	.11120	-.03847	.00205	.00049	.00019	.44732	.00000	.00000
400.380	499.510	-.25216	.11689	-.03080	.00081	-.00008	.00020	.47301	.00000	.00000
400.480	600.020	-.25554	.12092	-.02622	.00278	-.00079	.00037	.48665	.00000	.00000
400.500	750.220	-.23458	.10941	-.03662	.00276	.00043	.00021	.44927	.00000	.00000
400.480	800.080	-.23362	.10937	-.03654	.00237	.00045	.00020	.44906	.00000	.00000
	GRADIENT	.00000	.00000	.00000	.00000	.00000	.00000	.00000	.00000	.00000

AEDC VA422(IA17) ORB AND ET SEPARATING(ET DATA) (ATR094) (24 JUL 75)

REFERENCE DATA

SREF = 2690.0000 SQ.FT. XMRP = 1360.1000 IN. XT
LREF = 1290.3000 IN. YMRP = .0000 IN. YT
BREF = 1290.3000 IN. ZMRP = 416.4000 IN. ZT
SCALE = .0100

PARAMETRIC DATA

DLT-Y = .000 ALPHA = -5.000
BETA = .000 DLTALF = -20.000
DLTBTA = .000 MACH = 5.930
AILRON = 15.000 ELEVON = .000
GRID = 11.000

RUN NO. 505/ 0 GRADIENT INTERVAL = -5.00/ 5.00

DLT-X	DLT-Z	CN	CA	CLM	CY	CYN	CBL	XCP/L	YCP/L	CPB
.512	804.240	-.50453	.14693	-.02230	.00585	-.00084	.00048	.52747	.00000	.00000
.509	901.120	-.48345	.14687	-.03279	.00562	-.00052	.00051	.51096	.00000	.00000
.456	1000.400	-.48154	.14658	-.03287	.00668	-.00047	.00050	.51066	.00000	.00000
	GRADIENT	.00000	.00000	.00000	.00000	.00000	.00000	.00000	.00000	.00000

AEDC VA422(IA17) ORB AND ET SEPARATING(ET DATA) (ATR094) (24 JUL 75)

REFERENCE DATA

SREF = 2690.0000 SQ.FT. XMRP = 1360.1000 IN. XT
LREF = 1290.3000 IN. YMRP = .0000 IN. YT
BREF = 1290.3000 IN. ZMRP = 416.4000 IN. ZT
SCALE = .0100

PARAMETRIC DATA

DLT-Y = .000 ALPHA = -5.000
BETA = .000 DLTALF = -20.000
DLTBTA = .000 MACH = 5.930
AILRON = 15.000 ELEVON = .000
GRID = 11.000

RUN NO. 499/ 0 GRADIENT INTERVAL = -5.00/ 5.00

DLT-X	DLT-Z	CN	CA	CLM	CY	CYN	CBL	XCP/L	YCP/L	CPB
400.560	751.020	-.52014	.15974	-.01391	.00641	-.00064	.00051	.53966	.00000	.00000
400.410	800.620	-.50454	.15848	-.01953	.00712	-.00080	.00094	.53130	.00000	.00000
400.460	900.330	-.49300	.14988	-.02494	.00678	-.00035	.00046	.52299	.00000	.00000
400.320	1000.400	-.47449	.14580	-.03404	.00639	-.00030	.00047	.50823	.00000	.00000
	GRADIENT	.00000	.00000	.00000	.00000	.00000	.00000	.00000	.00000	.00000

AEDC VA422(IA17) ORB AND ET SEPARATING(ET DATA) (ATR095) (24 JUL 75)

REFERENCE DATA

SREF = 2690.0000 SQ.FT. XMRP = 1360.1000 IN. XT
LREF = 1290.3000 IN. YMRP = .0000 IN. YT
BREF = 1290.3000 IN. ZMRP = 416.4000 IN. ZT
SCALE = .0100

PARAMETRIC DATA

DLT-Y = .000 ALPHA = -10.000
BETA = .000 DLTALF = .000
DLTBTA = .000 MACH = 5.930
AILRON = 15.000 ELEVON = .000
GRID = 10.000

RUN NO. 521/ 0 GRADIENT INTERVAL = -5.00/ 5.00

DLT-X	DLT-Z	CN	CA	CLM	CY	CYN	CBL	XCP/L	YCP/L	CPB
.495	31.218	-.17091	.10405	-.03144	.00357	.00049	.00036	.42980	.00000	.00000
.449	102.530	-.16088	.10385	-.02812	.00187	.00041	.00014	.43621	.00000	.00000
.530	202.090	-.16077	.10303	-.02729	.00092	-.00001	.00008	.43973	.00000	.00000
.519	300.510	-.16474	.10798	-.02081	.00127	-.00040	.00007	.47008	.00000	.00000
.487	400.150	-.15033	.09823	-.02734	.00092	.00018	.00008	.43129	.00000	.00000
.552	500.230	-.14739	.09945	-.02848	.00177	.00029	.00004	.42335	.00000	.00000
	GRADIENT	.00000	.00000	.00000	.00000	.00000	.00000	.00000	.00000	.00000

RUN NO. 522/ 0 GRADIENT INTERVAL = -5.00/ 5.00

DLT-X	DLT-Z	CN	CA	CLM	CY	CYN	CBL	XCP/L	YCP/L	CPB
400.410	31.569	-.15513	.09810	-.04298	.00335	.00008	.00021	.38480	.00000	.00000
400.390	97.797	-.15654	.10437	-.03201	.00004	-.00008	.00008	.41549	.00000	.00000
400.440	197.140	-.14512	.09841	-.03742	.00113	.00018	.00018	.37818	.00000	.00000
400.510	298.800	-.15368	.10073	-.03083	.00033	-.00010	.00010	.41909	.00000	.00000
400.370	399.930	-.16105	.10393	-.02327	.00029	-.00037	.00005	.45739	.00000	.00000
400.380	500.020	-.15668	.10307	-.02339	.00171	-.00024	.00012	.45405	.00000	.00000
	GRADIENT	.00000	.00000	.00000	.00000	.00000	.00000	.00000	.00000	.00000

AEDC VA422(IA17) ORB AND ET SEPARATING(ET DATA) (ATR096) (24 JUL 75)

REFERENCE DATA

SREF = 2890.0000 SQ.FT. XMRP = 1360.1000 IN. XT
LREF = 1290.3000 IN. YMRP = .0000 IN. YT
BREF = 1290.3000 IN. ZMRP = 416.4000 IN. ZT
SCALE = .0100

PARAMETRIC DATA

DLT-Y = .000 ALPHA = -10.000
BETA = .000 DLTALF = -10.000
DLTBTA = .000 MACH = 5.930
AILRON = 15.000 ELEVON = .000
GRID = 10.000

ORIGINAL PAGE IS OF POOR QUALITY

RUN NO. 523/ 0 GRADIENT INTERVAL = -5.00/ 5.00

DLT-X	DLT-Z	CN	CA	CLM	CY	CYN	CBL	XCP/L	YCP/L	CPB
.510	403.150	-.35799	.12402	-.03958	.00247	.00024	.00039	.48111	.00000	.00000
.401	501.690	-.37649	.13763	-.02249	.00510	-.00070	.00027	.51660	.00000	.00000
.243	600.620	-.36765	.13458	-.02518	.00472	-.00080	.00037	.51048	.00000	.00000
.481	700.260	-.34800	.12465	-.03572	.00459	-.00028	.00031	.48564	.00000	.00000
.479	801.200	-.34556	.12568	-.03584	.00491	-.00030	.00032	.48588	.00000	.00000
	GRADIENT	.00000	.00000	.00000	.00000	.00000	.00000	.00000	.00000	.00000

RUN NO. 524/ 0 GRADIENT INTERVAL = -5.00/ 5.00

DLT-X	DLT-Z	CN	CA	CLM	CY	CYN	CBL	XCP/L	YCP/L	CPB
400.470	397.390	-.32275	.11209	-.06141	.00258	.00098	.00034	.42542	.00000	.00000
400.320	499.390	-.34361	.11879	-.04641	.00291	.00048	.00035	.46398	.00000	.00000
400.310	600.200	-.36089	.12800	-.03241	.00282	.00036	.00031	.49559	.00000	.00000
400.200	700.180	-.36851	.13627	-.02380	.00564	-.00108	.00051	.51323	.00000	.00000
400.470	800.240	-.35659	.12630	-.03141	.00480	-.00034	.00033	.49680	.00000	.00000
	GRADIENT	.00000	.00000	.00000	.00000	.00000	.00000	.00000	.00000	.00000

AEDC VA422(1A17) ORB AND ET SEPARATING(ET DATA) (ATR097) (24 JUL 75)

REFERENCE DATA

SREF = 2690.0000 SQ.FT. XMRP = 1360.1000 IN. XT
LREF = 1290.3000 IN. YMRP = .0000 IN. YT
BREF = 1290.3000 IN. ZMRP = 416.4000 IN. ZT
SCALE = .0100

PARAMETRIC DATA

DLT-Y = .000 ALPHA = .000
BETA = 3.000 DLTALF = .000
DLTBTA = .000 MACH = 5.930
AILRON = .000 ELEVON = 15.000
GRID = 14.000

RUN NO. 581/ 0 GRADIENT INTERVAL = -5.00/ 5.00

DLT-X	DLT-Z	CN	CA	CLM	CY	CYN	CBL	XCP/L	YCP/L	CPB
.626	18.911	-.04113	.09385	.00817	-.03698	-.01033	.00047	.69720	.36324	.00000
.478	99.566	-.03573	.09210	.00806	-.03587	-.01033	.00041	.71588	.35713	.00000
.586	200.480	-.02480	.09505	.01138	-.03450	-.01214	.00015	.87898	.31248	.00000
.580	302.120	-.00921	.08846	.00183	-.03683	-.01203	.00030	.69710	.33019	.00000
.549	401.100	-.00865	.08922	.00249	-.03738	-.01228	.00031	.75949	.32879	.00000
.603	500.200	-.00929	.09133	.00244	-.03814	-.01302	.00032	.74228	.31986	.00000
.784	597.170	-.00993	.09066	.00181	-.03883	-.01358	.00033	.68551	.31408	.00000
	GRADIENT	.00000	.00000	.00000	.00000	.00000	.00000	.00000	.00000	.00000

AEDC VA422(1A17) ORB AND ET SEPARATING(ET DATA) (ATR098) (24 JUL 75)

REFERENCE DATA

SREF = 2690.0000 SQ.FT. XMRP = 1360.1000 IN. XT
LREF = 1290.3000 IN. YMRP = .0000 IN. YT
BREF = 1290.3000 IN. ZMRP = 416.4000 IN. ZT
SCALE = .0100

PARAMETRIC DATA

DLT-Y = .000 ALPHA = .000
BETA = 3.000 DLTALF = -10.000
DLTBTA = .000 MACH = 5.930
AILRON = .000 ELEVON = 15.000
GRID = 14.000

RUN NO. 582/ 0 GRADIENT INTERVAL = -5.00/ 5.00

DLT-X	DLT-Z	CN	CA	CLM	CY	CYN	CBL	XCP/L	YCP/L	CPB
.515	403.710	-.16687	.11029	-.01149	-.03627	-.01075	.00035	.51019	.35122	.00000
.603	501.800	-.14617	.10065	-.02459	-.03889	-.01082	.00028	.44082	.36402	.00000
.507	600.320	-.14305	.10151	-.02735	-.04093	-.01091	.00034	.42478	.37214	.00000
.549	750.060	-.14658	.10210	-.02759	-.04011	-.01102	.00033	.42685	.36641	.00000
-.192	802.200	-.14657	.10164	-.02744	-.04028	-.01075	.00032	.42752	.37185	.00000
	GRADIENT	.00000	.00000	.00000	.00000	.00000	.00000	.00000	.00000	.00000

AEDC VA422(IA17) ORB AND ET SEPARATING(ET DATA) (ATR099) (24 JUL 75)

REFERENCE DATA

SREF = 2690.0000 SQ.FT. XMRP = 1380.1000 IN. XT
LREF = 1290.3000 IN. YMRP = .0000 IN. YT
BREF = 1290.3000 IN. ZMRP = 416.4000 IN. ZT
SCALE = .0100

PARAMETRIC DATA

DLT-Y = .000 ALPHA = .000
BETA = 3.000 DLTALF = -20.000
DLTBTA = .000 MACH = 5.930
AILRON = .000 ELEVON = 15.000
GRID = 14.000

RUN NO. 583/ 0 GRADIENT INTERVAL = -5.00/ 5.00

DLT-X	DLT-Z	CN	CA	CLM	CY	CYN	CBL	XCP/L	YCP/L	CPB
.529	802.200	-.34748	.12649	-.03771	-.05231	-.00814	.00029	.48252	.44969	.00000
.588	900.480	-.34957	.12688	-.03849	-.05121	-.00745	.00030	.48543	.45673	.00000
.388	1000.200	-.34983	.12755	-.03521	-.05067	-.00707	.00027	.48803	.46090	.00000
	GRADIENT	.00000	.00000	.00000	.00000	.00000	.00000	.00000	.00000	.00000

AEDC VA422(IA17) ORB AND ET SEPARATING(ET DATA) (ATR100) (24 JUL 75)

REFERENCE DATA

SREF = 2690.0000 SQ.FT. XMRP = 1360.1000 IN. XT
LREF = 1290.3000 IN. YMRP = .0000 IN. YT
BREF = 1290.3000 IN. ZMRP = 416.4000 IN. ZT
SCALE = .0100

PARAMETRIC DATA

DLT-Y = .000 ALPHA = .000
BETA = .000 DLTALF = .000
DLTBTA = .000 MACH = 5.930
AILRON = .000 ELEVON = 15.000
GRID = 13.000

RUN NO. 568/ 0 GRADIENT INTERVAL = -5.00/ 5.00

DLT-X	DLT-Z	CN	CA	CLM	CY	CYN	CBL	XCP/L	YCP/L	CPB
.479	19.009	-.03825	.09157	.00831	.00170	.00016	.00021	.67357	.00000	.00000
.417	99.507	-.03383	.09159	.00717	.00155	-.00018	.00008	.70643	.00000	.00000
.419	200.390	-.02423	.09408	.01079	.00129	-.00028	.00008	.86949	.00000	.00000
.515	302.040	-.00861	.08809	.00170	.00099	.00007	.00003	.69660	.00000	.00000
.517	400.980	-.00738	.08967	.00264	.00029	-.00010	.00004	.80777	.00000	.00000
.435	500.110	-.00924	.09154	.00201	.00076	.00013	.00004	.71058	.00000	.00000
.419	597.360	-.01023	.09163	.00158	.00073	.00010	.00003	.66648	.00000	.00000
	GRADIENT	.00000	.00000	.00000	.00000	.00000	.00000	.00000	.00000	.00000

RUN NO. 569/ 0 GRADIENT INTERVAL = -5.00/ 5.00

DLT-X	DLT-Z	CN	CA	CLM	CY	CYN	CBL	XCP/L	YCP/L	CPB
400.440	19.941	-.04734	.09335	-.00734	.00498	.00010	.00016	.45006	.54422	.00000
400.530	97.988	-.04110	.09347	.00799	.00218	-.00002	.00007	.69411	.00000	.00000
400.480	199.100	-.02933	.09128	.01107	.00035	-.00024	.00003	.82197	.00000	.00000
400.530	297.750	-.01832	.09076	.00729	.00046	-.00015	.00005	.87024	.00000	.00000
400.480	399.020	-.00716	.08895	.00293	.00026	-.00031	.00005	.84472	.00000	.00000
400.500	500.140	-.00864	.09118	.00274	-.00073	-.00052	.00006	.77967	.00000	.00000
400.480	600.220	-.01028	.09199	.00127	.00111	.00004	.00003	.64453	.00000	.00000
	GRADIENT	.00000	.00000	.00000	.00000	.00000	.00000	.00000	.00000	.00000

AEDC VA422(IA17) ORB AND ET SEPARATING(ET DATA) (ATR101) (24 JUL 75)

REFERENCE DATA

SREF = 2690.0000 SQ.FT. XMRP = 1360.1000 IN. XT
LREF = 1290.3000 IN. YMRP = .0000 IN. YT
BREF = 1290.3000 IN. ZMRP = 416.4000 IN. ZT
SCALE = .0100

PARAMETRIC DATA

DLT-Y = .000 ALPHA = .000
BETA = .000 DLTALF = -10.000
DLTBTA = .000 MACH = 5.930
AILRON = .000 ELEVON = 15.000
GRID = 13.000

RUN NO. 570/ 0 GRADIENT INTERVAL = -5.00/ 5.00

DLT-X	DLT-Z	CN	CA	CLM	CY	CYN	CBL	XCP/L	YCP/L	CPB
.476	403.480	-.16430	.10923	-.01208	.00487	-.00027	.00008	.50699	.00000	.00000
.558	501.850	-.14422	.09920	-.02624	.00142	.00057	.00005	.43122	.00000	.00000
.554	600.180	-.14084	.10144	-.02928	.00274	.00073	.00002	.41289	.00000	.00000
.609	750.110	-.14537	.10021	-.03017	.00252	.00073	.00002	.41336	.00000	.00000
-.154	802.370	-.14399	.10001	-.03058	.00183	.00055	.00003	.40999	.00000	.00000
	GRADIENT	.00000	.00000	.00000	.00000	.00000	.00000	.00000	.00000	.00000

RUN NO. 571/ 0 GRADIENT INTERVAL = -5.00/ 5.00

DLT-X	DLT-Z	CN	CA	CLM	CY	CYN	CBL	XCP/L	YCP/L	CPB
400.500	396.870	-.16891	.10834	-.01151	.00314	.00025	-.00001	.51073	.00000	.00000
400.370	498.430	-.15880	.10793	-.01569	.00426	.00006	.00008	.48931	.00000	.00000
400.510	600.050	-.14122	.10063	-.02746	.00194	.00070	.00003	.42248	.00000	.00000
400.460	750.270	-.14540	.10087	-.03046	.00132	.00036	.00004	.41199	.00000	.00000
.400.500	800.200	-.14613	.10017	-.03008	.00160	.00043	.00004	.41453	.00000	.00000
	GRADIENT	.00000	.00000	.00000	.00000	.00000	.00000	.00000	.00000	.00000

AEDC VA422(IA17) ORB AND ET SEPARATING(ET DATA) (ATR103) (24 JUL 75)

REFERENCE DATA

SREF = 2690.0000 SQ.FT. XMRP = 1360.1000 IN. XT
LREF = 1290.3000 IN. YMRP = .0000 IN. YT
BREF = 1290.3000 IN. ZMRP = 416.4000 IN. ZT
SCALE = .0100

PARAMETRIC DATA

DLT-Y = .000 ALPHA = .000
BETA = .000 DLTALF = -20.000
DLTBTA = .000 MACH = 5.930
AILRON = .000 ELEVON = 15.000
GRID = 13.000

RUN NO. 578/ 0 GRADIENT INTERVAL = -5.00/ 5.00

DLT-X	DLT-Z	CN	CA	CLM	CY	CYN	CBL	XCP/L	YCP/L	CPB
.436	802.430	-.34499	.12523	-.04129	.00499	-.00000	.00031	.47473	.00000	.00000
.516	900.560	-.34586	.12390	-.04125	.00590	.00035	.00034	.47501	.00000	.00000
.485	1000.400	-.34625	.12374	-.03877	.00445	.00008	.00035	.48011	.00000	.00000
	GRADIENT	.00000	.00000	.00000	.00000	.00000	.00000	.00000	.00000	.00000

AEDC VA422(IA17) ORB AND ET SEPARATING(ET DATA) (ATR103) (24 JUL 75)

REFERENCE DATA

SREF = 2690.0000 SQ.FT. XMRP = 1360.1000 IN. XT
LREF = 1290.3000 IN. YMRP = .0000 IN. YT
BREF = 1290.3000 IN. ZMRP = 416.4000 IN. ZT
SCALE = .0100

PARAMETRIC DATA

DLT-Y = .000 ALPHA = .000
BETA = .000 DLTALF = -20.000
DLTBTA = .000 MACH = 5.930
AILRON = .000 ELEVON = 15.000
GRID = 13.000

RUN NO. 572/ 0 GRADIENT INTERVAL = -5.00/ 5.00

DLT-X	DLT-Z	CN	CA	CLM	CY	CYN	CBL	XCP/L	YCP/L	CPB
400.290	750.170	-.37289	.13990	-.02353	.00644	-.00068	.00036	.51425	.00000	.00000
400.270	800.290	-.36133	.13167	-.03146	.00592	-.00011	.00029	.49751	.00000	.00000
400.360	900.460	-.34591	.12688	-.03987	.00634	.00037	.00035	.47782	.00000	.00000
400.320	1000.300	-.34468	.12565	-.03814	.00609	.00015	.00035	.48103	.00000	.00000
	GRADIENT	.00000	.00000	.00000	.00000	.00000	.00000	.00000	.00000	.00000

ORIGINAL PAGE IS OF POOR QUALITY

AEDC VA422(IA17) ORB AND ET SEPARATING(ET DATA) (ATR104) (24 JUL 75)

REFERENCE DATA

SREF = 2690.0000 SQ.FT. XMRP = 1360.1000 IN. XT
LREF = 1290.3000 IN. YMRP = .0000 IN. YT
BREF = 1290.3000 IN. ZMRP = 416.4000 IN. ZT
SCALE = .0100

PARAMETRIC DATA

DLT-Y = .000 ALPHA = 5.000
BETA = .000 DLTALF = .000
DLTBTA = .000 MACH = 5.930
AILRON = .000 ELEVON = 15.000
GRID = 12.000

RUN NO. 555/ 0 GRADIENT INTERVAL = -5.00/ 5.00

DLT-X	DLT-Z	CN	CA	CLM	CY	CYN	CBL	XCP/L	YCP/L	CPB
.579	19.268	.01488	.09138	.02873	.00083	-.00027	.00011	-.79237	.00000	.00000
.566	98.326	.02151	.09238	.02950	.00029	-.00062	.00002	-.39959	.00000	.00000
.552	199.060	.03711	.09037	.02900	.00180	-.00079	.00006	.01236	.00000	.00000
.652	300.060	.05353	.08471	.01979	.00064	-.00018	.00002	.30002	.00000	.00000
.664	402.090	.05389	.08580	.01958	.00034	-.00027	.00003	.30456	.00000	.00000
.614	501.130	.05440	.08575	.01939	.00015	-.00024	.00004	.30928	.00000	.00000
.655	598.560	.05512	.08631	.02023	-.00053	-.00047	.00005	.30197	.00000	.00000
	GRADIENT	.00000	.00000	.00000	.00000	.00000	.00000	.00000	.00000	.00000

RUN NO. 556/ 0 GRADIENT INTERVAL = -5.00/ 5.00

DLT-X	DLT-Z	CN	CA	CLM	CY	CYN	CBL	XCP/L	YCP/L	CPB
400.580	19.975	.00808	.09384	.01208	.00158	-.00038	.00014	-.83484	.00000	.00000
400.460	98.521	.00919	.09457	.03053	.00239	-.00045	.00009	-1.76200	.00000	.00000
400.510	200.140	.02439	.09515	.03564	.00170	-.00149	.00010	-.46235	.00000	.00000
400.500	298.950	.05252	.08384	.02083	.00001	-.00032	.00004	.28386	.00000	.00000
400.490	398.100	.05454	.08489	.01981	-.00011	-.00028	.00004	.30455	.00000	.00000
400.580	499.340	.05415	.08549	.01985	-.00030	-.00032	.00004	.30231	.00000	.00000
400.600	599.910	.05502	.08819	.02110	-.00057	-.00053	.00005	.29042	.00000	.00000
	GRADIENT	.00000	.00000	.00000	.00000	.00000	.00000	.00000	.00000	.00000

AEDC VA422(IA17) ORB AND ET SEPARATING(ET DATA) (ATR105) (24 JUL 75)

REFERENCE DATA

SREF = 2690.0000 SQ.FT. XMRP = 1360.1000 IN. XT
LREF = 1290.3000 IN. YMRP = .0000 IN. YT
BREF = 1290.3000 IN. ZMRP = 416.4000 IN. ZT
SCALE = .0100

PARAMETRIC DATA

DLT-Y = .000 ALPHA = 5.000
BETA = .000 DLTALF = -10.000
DLTBTA = .000 MACH = 5.930
AILRON = .000 ELEVON = 15.000
GRID = 12.000

RUN NO. 557/ 0 GRADIENT INTERVAL = -5.00/ 5.00

DLT-X	DLT-Z	CN	CA	CLM	CY	CYN	CBL	XCP/L	YCP/L	CPB
.447	400.900	-.08999	.09818	-.00099	.00225	-.00048	.00005	.55069	.00000	.00000
.416	502.720	-.06890	.09021	-.01490	.00151	.00023	.00003	.40722	.00000	.00000
.466	601.840	-.06919	.09054	-.01523	.00193	.00021	.00002	.40451	.00000	.00000
.474	750.090	-.06727	.09297	-.01498	.00172	.00024	.00003	.40277	.00000	.00000
-.815	803.350	-.06939	.09330	-.01552	.00161	.00017	.00003	.40211	.00000	.00000
	GRADIENT	.00000	.00000	.00000	.00000	.00000	.00000	.00000	.00000	.00000

RUN NO. 558/ 0 GRADIENT INTERVAL = -5.00/ 5.00

DLT-X	DLT-Z	CN	CA	CLM	CY	CYN	CBL	XCP/L	YCP/L	CPB
400.420	398.420	-.11419	.10298	.01196	.00311	-.00036	.00004	.63149	.00000	.00000
400.520	497.740	-.07277	.08375	-.01195	.00229	.00028	.00004	.44358	.00000	.00000
400.530	598.930	-.06603	.09021	-.01448	.00147	.00013	.00004	.40530	.00000	.00000
400.530	750.100	-.06445	.09311	-.01456	.00155	.00011	.00003	.40049	.00000	.00000
400.600	800.120	-.06696	.09517	-.01495	.00154	.00015	.00002	.40240	.00000	.00000
	GRADIENT	.00000	.00000	.00000	.00000	.00000	.00000	.00000	.00000	.00000

AEDC VA422(IA17) ORB AND ET SEPARATING(ET DATA) (ATR107) (24 JUL 75)

REFERENCE DATA

SREF = 2690.0000 SQ.FT. XMRP = 1360.1000 IN. XT
LREF = 1290.3000 IN. YMRP = .0000 IN. YT
BREF = 1290.3000 IN. ZMRP = 416.4000 IN. ZT
SCALE = .0100

PARAMETRIC DATA

DLT-Y = .000 ALPHA = 5.000
BETA = .000 DLTALF = -20.000
DLTBTA = .000 MACH = 5.930
AILRON = .000 ELEVON = 15.000
GRID = 12.000

RUN NO. 585/ 0 GRADIENT INTERVAL = -5.00/ 5.00

DLT-X	DLT-Z	CN	CA	CLM	CY	CYN	CBL	XCP/L	YCP/L	CPB
.389	801.630	-.22644	.11021	-.03591	.00468	.00113	.00011	.44755	.00000	.00000
.357	900.200	-.22784	.11132	-.03749	.00403	.00111	.00012	.44328	.00000	.00000
.478	1000.200	-.23220	.11125	-.03750	.00364	.00081	.00013	.44551	.00000	.00000
	GRADIENT	.00000	.00000	.00000	.00000	.00000	.00000	.00000	.00000	.00000

AEDC VA422(IA17) ORB AND ET SEPARATING(ET DATA) (ATR107) (24 JUL 75)

REFERENCE DATA

SREF = 2690.0000 SQ.FT. XMRP = 1380.1000 IN. XT
LREF = 1290.3000 IN. YMRP = .0000 IN. YT
BREF = 1290.3000 IN. ZMRP = 416.4000 IN. ZT
SCALE = .0100

PARAMETRIC DATA

DLT-Y = .000 ALPHA = 5.000
BETA = .000 DLTALF = -20.000
DLTBTA = .000 MACH = 5.930
AILRON = .000 ELEVON = 15.000
GRID = 12.000

RUN NO. 589/ 0 GRADIENT INTERVAL = -5.00/ 5.00

DLT-X	DLT-Z	CN	CA	CLM	CY	CYN	CBL	XCP/L	YCP/L	CPB
400.410	750.190	-.23137	.10946	-.03235	.00338	.00098	.00011	.46065	.00000	.00000
400.430	800.100	-.22595	.11104	-.03589	.00337	.00072	.00013	.44736	.00000	.00000
400.470	900.110	-.22753	.11221	-.03747	.00389	.00094	.00012	.44329	.00000	.00000
400.480	1000.200	-.23208	.11182	-.03869	.00232	.00070	.00013	.44185	.00000	.00000
	GRADIENT	.00000	.00000	.00000	.00000	.00000	.00000	.00000	.00000	.00000

AEDC VA422(IA17) ORB AND ET SEPARATING(ET DATA) (ATR108) (24 JUL 75)

REFERENCE DATA

SREF = 2690.0000 SQ.FT. XMRP = 1360.1000 IN. XT
LREF = 1290.3000 IN. YMRP = .0000 IN. YT
BREF = 1290.3000 IN. ZMRP = 416.4000 IN. ZT
SCALE = .0100

PARAMETRIC DATA

DLT-Y = .000 ALPHA = -5.000
BETA = .000 DLTALF = .000
DLTBTA = .000 MACH = 5.930
AILRON = .000 ELEVON = 15.000
GRID = 11.000

RUN NO. 542/ 0 GRADIENT INTERVAL = -5.00/ 5.00

DLT-X	DLT-Z	CN	CA	CLM	CY	CYN	CBL	XCP/L	YCP/L	CPB
.398	19.398	-.09750	.09365	-.01427	.00283	.00010	.00029	.45613	.00000	.00000
.497	101.310	-.09076	.09519	-.01050	.00253	-.00030	.00014	.47754	.00000	.00000
.431	201.790	-.08431	.09881	-.00788	.00084	-.00016	.00001	.49308	.00000	.00000
.503	301.290	-.07687	.09560	-.01381	.00083	-.00009	.00007	.43280	.00000	.00000
.429	400.230	-.07326	.09452	-.01709	.00021	-.00029	.00005	.39534	.00000	.00000
.559	500.170	-.07419	.09218	-.01830	.00019	-.00025	.00006	.38596	.00000	.00000
.534	600.180	-.07335	.09073	-.01733	.00019	-.00026	.00006	.39328	.00000	.00000
	GRADIENT	.00000	.00000	.00000	.00000	.00000	.00000	.00000	.00000	.00000

RUN NO. 543/ 0 GRADIENT INTERVAL = -5.00/ 5.00

DLT-X	DLT-Z	CN	CA	CLM	CY	CYN	CBL	XCP/L	YCP/L	CPB
400.490	24.048	-.10000	.09258	-.02701	.00309	-.00014	.00021	.36967	.00000	.00000
400.450	100.160	-.09187	.09421	-.01284	.00086	.00006	.00008	.46068	.00000	.00000
400.410	197.770	-.07851	.09395	-.01271	.00033	-.00026	.00006	.44527	.00000	.00000
400.430	298.260	-.07987	.09780	-.00949	.00088	-.00037	.00007	.47530	.00000	.00000
400.420	399.860	-.08001	.09731	-.01313	.00076	-.00061	.00009	.44371	.00000	.00000
400.460	500.150	-.07384	.09279	-.01768	.00001	-.00039	.00006	.39106	.00000	.00000
400.520	600.140	-.07337	.09124	-.01775	.00006	-.00032	.00004	.38930	.00000	.00000
	GRADIENT	.00000	.00000	.00000	.00000	.00000	.00000	.00000	.00000	.00000

AEDC VA422(IA17) ORB AND ET SEPARATING(ET DATA) (ATR109) (24 JUL 75)

REFERENCE DATA

SREF = 2690.0000 SQ.FT. XMRP = 1360.1000 IN. XT
LREF = 1290.3000 IN. YMRP = .0000 IN. YT
BREF = 1290.3000 IN. ZMRP = 416.4000 IN. ZT
SCALE = .0100

PARAMETRIC DATA

DLT-Y = .000 ALPHA = -5.000
BETA = .000 DLTALF = -10.000
DLTBTA = .000 MACH = 5.930
AILRON = .000 ELEVON = 15.000
GRID = 11.000

RUN NO. 544/ 0 GRADIENT INTERVAL = -5.00/ 5.00

DLT-X	DLT-Z	CN	CA	CLM	CY	CYN	CBL	XCP/L	YCP/L	CPB
.414	404.010	-.26579	.12551	-.02119	.00347	-.00073	.00026	.50264	.00000	.00000
.401	501.100	-.25325	.11953	-.02818	.00122	-.00099	.00030	.48062	.00000	.00000
.505	600.400	-.23655	.10949	-.03780	.00010	-.00012	.00020	.44670	.00000	.00000
.480	750.210	-.23528	.10931	-.03581	.00131	.00000	.00019	.45201	.00000	.00000
.132	801.490	-.23529	.10932	-.03570	.00119	-.00002	.00020	.45235	.00000	.00000
	GRADIENT	.00000	.00000	.00000	.00000	.00000	.00000	.00000	.00000	.00000

RUN NO. 545/ 0 GRADIENT INTERVAL = -5.00/ 5.00

DLT-X	DLT-Z	CN	CA	CLM	CY	CYN	CBL	XCP/L	YCP/L	CPB
400.490	396.970	-.24458	.11174	-.03709	.00090	.00034	.00021	.45240	.00000	.00000
400.400	499.420	-.25433	.11734	-.03070	.00144	-.00000	.00019	.47401	.00000	.00000
400.490	599.960	-.25575	.11957	-.02616	.00245	-.00080	.00037	.48690	.00000	.00000
400.500	750.180	-.23528	.10912	-.03653	.00183	.00029	.00020	.44986	.00000	.00000
400.470	800.140	-.23418	.10823	-.03642	.00104	.00017	.00019	.44970	.00000	.00000
	GRADIENT	.00000	.00000	.00000	.00000	.00000	.00000	.00000	.00000	.00000

AEDC VA422(IA17) ORB AND ET SEPARATING(ET DATA) (ATR111) (24 JUL 75)

REFERENCE DATA

SREF = 2690.0000 SQ.FT. XMRP = 1360.1000 IN. XT
LREF = 1290.3000 IN. YMRP = .0000 IN. YT
BREF = 1290.3000 IN. ZMRP = 416.4000 IN. ZT
SCALE = .0100

PARAMETRIC DATA

DLT-Y = .000 ALPHA = -5.000
BETA = .000 DLTALF = -20.000
DLTBTA = .000 MACH = 5.930
AILRON = .000 ELEVON = 15.000
GRID = 11.000

RUN NO. 552/ 0 GRADIENT INTERVAL = -5.00/ 5.00

DLT-X	DLT-Z	CN	CA	CLM	CY	CYN	CBL	XCP/L	YCP/L	CPB
.375	804.190	-.50324	.14622	-.02160	.00709	-.00079	.00047	.52838	.00000	.00000
.484	901.250	-.48118	.14617	-.03271	.00659	-.00070	.00052	.51085	.00000	.00000
.417	1000.400	-.47995	.14552	-.03268	.00712	-.00053	.00051	.51078	.00000	.00000
	GRADIENT	.00000	.00000	.00000	.00000	.00000	.00000	.00000	.00000	.00000

AEDC VA422(IA17) ORB AND ET SEPARATING(ET DATA) (ATR111) (24 JUL 75)

REFERENCE DATA

SREF = 2690.0000 SQ.FT. XMRP = 1360.1000 IN. XT
LREF = 1290.3000 IN. YMRP = .0000 IN. YT
BREF = 1290.3000 IN. ZMRP = 416.4000 IN. ZT
SCALE = .0100

PARAMETRIC DATA

DLT-Y = .000 ALPHA = -5.000
BETA = .000 DLTALF = -20.000
DLTBTA = .000 MACH = 5.930
AILRON = .000 ELEVON = 15.000
GRID = 11.000

RUN NO. 546/ 0 GRADIENT INTERVAL = -5.00/ 5.00

DLT-X	DLT-Z	CN	CA	CLM	CY	CYN	CBL	XCP/L	YCP/L	CPB
[illegible].440	751.720	-.55054	.17448	.00355	.00787	-.00120	.00127	.56284	.00000	.00000
400.350	800.860	-.50727	.15838	-.01948	.00802	-.00105	.00092	.53151	.00000	.00000
400.400	900.370	-.49397	.14969	-.02473	.00444	-.00075	.00047	.52337	.00000	.00000
400.320	1000.400	-.47642	.14471	-.03402	.00685	-.00032	.00047	.50846	.00000	.00000
	GRADIENT	.00000	.00000	.00000	.00000	.00000	.00000	.00000	.00000	.00000

AEDC VA422(IA17) ORB AND ET SEPARATING(ET DATA) (ATR112) (24 JUL 75)

REFERENCE DATA

SREF = 2690.0000 SQ.FT. XMRP = 1360.1000 IN. XT
LREF = 1290.3000 IN. YMRP = .0000 IN. YT
BREF = 1290.3000 IN. ZMRP = 416.4000 IN. ZT
SCALE = .0100

PARAMETRIC DATA

DLT-Y = .000 ALPHA = -10.000
BETA = .000 DLTALF = .000
DLTBTA = .000 MACH = 5.930
AILRON = .000 ELEVON = 15.000
GRID = 10.000

RUN NO. 533/ 0 GRADIENT INTERVAL = -5.00/ 5.00

DLT-X	DLT-Z	CN	CA	CLM	CY	CYN	CBL	XCP/L	YCP/L	CPB
.454	30.997	-.17004	.10299	-.03131	.00411	.00060	.00035	.42971	.00000	.00000
.398	102.550	-.16360	.10273	-.02793	.00112	.00015	.00014	.43905	.00000	.00000
.413	202.040	-.16012	.10224	-.02737	.00075	-.00004	.00008	.43891	.00000	.00000
.426	300.610	-.16465	.10690	-.02077	.00183	-.00026	.00007	.47020	.00000	.00000
.398	400.210	-.14983	.09756	-.02735	.00112	.00016	.00006	.43083	.00000	.00000
.816	500.290	-.14683	.09901	-.02837	.00104	.00033	.00005	.42337	.00000	.00000
	GRADIENT	.00000	.00000	.00000	.00000	.00000	.00000	.00000	.00000	.00000

RUN NO. 534/ 0 GRADIENT INTERVAL = -5.00/ 5.00

DLT-X	DLT-Z	CN	CA	CLM	CY	CYN	CBL	XCP/L	YCP/L	CPB
400.480	31.788	-.19458	.09877	-.04275	.00149	-.00008	.00019	.38513	.00000	.00000
400.430	97.707	-.15471	.10248	-.03185	.00123	.00024	.00008	.41450	.00000	.00000
400.510	197.140	-.14285	.09809	-.03741	.00158	.00034	.00015	.37512	.00000	.00000
400.440	298.810	-.15278	.09934	-.03055	.00104	.00018	.00008	.41860	.00000	.00000
400.450	399.840	-.15948	.10278	-.02325	.00137	.00012	.00004	.45646	.00000	.00000
400.450	500.150	-.15668	.10181	-.02328	.00186	-.00038	.00012	.45453	.00000	.00000
	GRADIENT	.00000	.00000	.00000	.00000	.00000	.00000	.00000	.00000	.00000

AEDC VA422(IA17) ORB AND ET SEPARATING(ET DATA) (ATR113) (24 JUL 75)

REFERENCE DATA

SREF = 2690.0000 SQ.FT. XMRP = 1360.1000 IN. XT
LREF = 1290.3000 IN. YMRP = .0000 IN. YT
BREF = 1290.3000 IN. ZMRP = 416.4000 IN. ZT
SCALE = .0100

PARAMETRIC DATA

DLT-Y = .000 ALPHA = -10.000
BETA = .000 DLTALF = -10.000
DLTBTA = .000 MACH = 5.930
AILRON = .000 ELEVON = 15.000
GRID = 10.000

RUN NO. 535/ 0 GRADIENT INTERVAL = -5.00/ 5.00

DLT-X	DLT-Z	CN	CA	CLM	CY	CYN	CBL	XCP/L	YCP/L	CPB
.413	402.740	-.35817	.12312	-.03963	.00387	.00075	.00036	.48104	.00000	.00000
.482	502.280	-.38210	.13870	-.01948	.00528	-.00065	.00035	.52272	.00000	.00000
.317	600.600	-.36594	.13366	-.02532	.00547	-.00075	.00036	.51000	.00000	.00000
.524	700.200	-.34742	.12369	-.03574	.00492	-.00014	.00031	.48647	.00000	.00000
.482	801.380	-.34528	.12485	-.03581	.00477	-.00018	.00033	.48589	.00000	.00000
	GRADIENT	.00000	.00000	.00000	.00000	.00000	.00000	.00000	.00000	.00000

RUN NO. 536/ 0 GRADIENT INTERVAL = -5.00/ 5.00

DLT-X	DLT-Z	CN	CA	CLM	CY	CYN	CBL	XCP/L	YCP/L	CPB
400.400	397.230	-.32303	.11180	-.06104	.00225	.00074	.00031	.42632	.00000	.00000
400.410	499.430	-.34531	.11805	-.04634	.00401	.00074	.00034	.46459	.00000	.00000
400.230	600.150	-.36122	.12661	-.03226	.00309	.00026	.00030	.49594	.00000	.00000
400.220	700.170	-.36881	.13464	-.02365	.00438	-.00116	.00049	.51354	.00000	.00000
400.520	800.280	-.35567	.12605	-.03151	.00534	-.00019	.00031	.49644	.00000	.00000
	GRADIENT	.00000	.00000	.00000	.00000	.00000	.00000	.00000	.00000	.00000

AEDC VA422(IA17) ORB AND ET SEPARATING(ET DATA) (ATR114) (24 JUL 75)

REFERENCE DATA

SREF = 2890.0000 SQ.FT. XMRP = 1380.1000 IN. XT
LREF = 1290.3000 IN. YMRP = .0000 IN. YT
BREF = 1290.3000 IN. ZMRP = 416.4000 IN. ZT
SCALE = .0100

PARAMETRIC DATA

DLT-Y = .000 ALPHA = 10.000
BETA = .000 DLTALF = -5.000
DLTBTA = .000 MACH = 5.930
AILRON = .000 ELEVON = .000
GRID = 23.000

ORIGINAL PAGE IS OF POOR QUALITY

RUN NO. 643/ 0 GRADIENT INTERVAL = -5.00/ 5.00

DLT-X	DLT-Z	CN	CA	CLM	CY	CYN	CBL	XCP/L	YCP/L	CPB
.657	199.730	-.00589	.09976	.04518	.00283	-.00031	.00001	5.92060	.00000	.00000
.611	298.630	.03214	.09121	.03278	.00226	-.00110	.00007	-.15418	.00000	.00000
.677	399.420	.05448	.08306	.02032	.00133	-.00010	.00001	.29776	.00000	.00000
.630	500.830	.05512	.08537	.02017	.00081	-.00031	.00002	.30269	.00000	.00000
.660	602.190	.05492	.08606	.01973	.00141	-.00008	-.00000	.30732	.00000	.00000
.589	700.710	.05456	.08566	.02017	.00075	-.00024	.00002	.30007	.00000	.00000
-.258	802.520	.05521	.08657	.02101	.00165	-.00002	.00000	.29255	.00000	.00000
	GRADIENT	.00000	.00000	.00000	.00000	.00000	.00000	.00000	.00000	.00000

RUN NO. 644/ 0 GRADIENT INTERVAL = -5.00/ 5.00

DLT-X	DLT-Z	CN	CA	CLM	CY	CYN	CBL	XCP/L	YCP/L	CPB
200.590	200.920	-.00527	.09714	.04142	.00195	-.00007	.00001	6.04980	.00000	.00000
200.530	300.570	.02189	.09384	.03788	.00244	-.00102	.00014	-.66143	.00000	.00000
200.620	400.950	.05348	.08275	.02026	.00044	-.00036	.00001	.29361	.00000	.00000
200.530	499.270	.05561	.08526	.02017	.00218	-.00005	.00000	.30495	.00000	.00000
200.650	597.780	.05577	.08509	.02004	.00029	-.00042	.00001	.30726	.00000	.00000
200.600	698.900	.05558	.08543	.02093	.00106	-.00018	.00001	.29533	.00000	.00000
200.660	799.870	.05644	.08758	.02194	.00120	-.00017	.00001	.28672	.00000	.00000
	GRADIENT	.00000	.00000	.00000	.00000	.00000	.00000	.00000	.00000	.00000

AEDC VA422(IA17) ORB AND ET SEPARATING(ET DATA) (ATR115) (24 JUL 75)

REFERENCE DATA

SREF = 2690.0000 SQ.FT. XMRP = 1360.1000 IN. XT
LREF = 1290.3000 IN. YMRP = .0000 IN. YT
BREF = 1290.3000 IN. ZMRP = 418.4000 IN. ZT
SCALE = .0100

PARAMETRIC DATA

DLT-Y = .000 ALPHA = 10.000
BETA = .000 DLTALF = -10.000
DLTBTA = .000 MACH = 5.930
AILRON = .000 ELEVON = .000
GRID = 23.000

RUN NO. 645/ 0 GRADIENT INTERVAL = -5.00/ 5.00

DLT-X	DLT-Z	CN	CA	CLM	CY	CYN	CBL	XCP/L	YCP/L	CPB
.472	399.480	-.03799	.09528	.02187	.00291	-.00079	.00018	.96051	.00000	.00000
.561	499.940	-.00643	.08496	.00315	.00187	.00003	.00001	.90096	.00000	.00000
.649	602.520	-.00685	.08764	.00258	.00255	.00020	.00001	.82138	.00000	.00000
.622	701.760	-.00702	.08757	.00241	.00205	-.00000	.00000	.79823	.00000	.00000
-.983	805.230	-.00685	.08931	.00264	.00259	.00035	-.00000	.82766	.00000	.00000
	GRADIENT	.00000	.00000	.00000	.00000	.00000	.00000	.00000	.00000	.00000

RUN NO. 646/ 0 GRADIENT INTERVAL = -5.00/ 5.00

DLT-X	DLT-Z	CN	CA	CLM	CY	CYN	CBL	XCP/L	YCP/L	CPB
200.490	400.590	-.05521	.10069	.03145	.00457	-.00113	.00030	.95630	.73173	.00000
200.670	500.550	-.00702	.08393	.00332	.00209	.00001	.00001	.88921	.00000	.00000
200.540	597.620	-.00636	.08716	.00290	.00197	.00008	.00001	.87684	.00000	.00000
200.550	698.020	-.00593	.08729	.00291	.00128	-.00001	.00002	.90159	.00000	.00000
200.540	799.530	-.00468	.08927	.00378	.00185	.00005	.00002	1.12370	.00000	.00000
	GRADIENT	.00000	.00000	.00000	.00000	.00000	.00000	.00000	.00000	.00000

RUN NO. 647/ 0 GRADIENT INTERVAL = -5.00/ 5.00

DLT-X	DLT-Z	CN	CA	CLM	CY	CYN	CBL	XCP/L	YCP/L	CPB
400.480	402.270	-.06397	.10477	.03562	.00553	-.00141	.00031	.94731	.73648	.00000
400.530	502.110	-.00723	.08483	.00296	.00181	.00006	.00001	.84402	.00000	.00000
400.460	600.720	-.00675	.08693	.00256	.00185	.00007	.00001	.82357	.00000	.00000
400.470	700.060	-.00522	.08764	.00341	.00179	.00004	.00001	1.01510	.00000	.00000
400.530	800.010	-.00556	.08989	.00405	.00161	.00011	.00001	1.06690	.00000	.00000
	GRADIENT	.00000	.00000	.00000	.00000	.00000	.00000	.00000	.00000	.00000

AEDC VA422(IA17) ORB AND ET SEPARATING(ET DATA) (ATR116) (24 JUL 75)

REFERENCE DATA

SREF = 2690.0000 SQ.FT. XMRP = 1380.1000 IN. XT
LREF = 1290.3000 IN. YMRP = .0000 IN. YT
BREF = 1290.3000 IN. ZMRP = 416.4000 IN. ZT
SCALE = .0100

PARAMETRIC DATA

DLT-Y = .000 ALPHA = 10.000
BETA = .000 DLTALF = -15.000
DLTBTA = .000 MACH = 5.930
AILRON = .000 ELEVON = .000
GRID = 23.000

ORIGINAL PAGE IS OF POOR QUALITY

RUN NO. 851/ 0 GRADIENT INTERVAL = -5.00/ 5.00

DLT-X	DLT-Z	CN	CA	CLM	CY	CYN	CBL	XCP/L	YCP/L	CPB
.442	501.760	-.11500	.10553	.01524	.00641	-.00037	.00031	.65090	.59849	.00000
.458	601.060	-.06485	.08732	-.01438	.00263	.00038	-.00001	.40344	.00000	.00000
.534	703.200	-.06653	.08929	-.01475	.00361	.00054	-.00001	.40345	.00000	.00000
.457	800.010	-.06600	.09031	-.01471	.00303	.00047	-.00000	.40263	.00000	.00000
	GRADIENT	.00000	.00000	.00000	.00000	.00000	.00000	.00000	.00000	.00000

RUN NO. 652/ 0 GRADIENT INTERVAL = -5.00/ 5.00

DLT-X	DLT-Z	CN	CA	CLM	CY	CYN	CBL	XCP/L	YCP/L	CPB
200.560	499.220	-.13707	.11772	.02785	.00635	-.00027	.00050	.70031	.58802	.00000
200.490	598.890	-.06413	.08630	-.01448	.00324	.00046	-.00001	.40058	.00000	.00000
200.540	696.650	-.06360	.08938	-.01453	.00275	.00043	.00000	.39869	.00000	.00000
200.590	798.390	-.06756	.09135	-.01391	.00341	.00043	.00000	.41453	.00000	.00000
	GRADIENT	.00000	.00000	.00000	.00000	.00000	.00000	.00000	.00000	.00000

RUN NO. 653/ 0 GRADIENT INTERVAL = -5.00/ 5.00

DLT-X	DLT-Z	CN	CA	CLM	CY	CYN	CBL	XCP/L	YCP/L	CPB
400.450	503.160	-.14387	.11743	.03053	.00662	-.00056	.00044	.70658	.61759	.00000
400.440	601.900	-.06785	.08707	-.01368	.00326	.00047	.00001	.41747	.00000	.00000
400.480	700.260	-.06320	.08955	-.01432	.00308	.00039	.00000	.40004	.00000	.00000
400.560	799.870	-.06295	.09141	-.01386	.00293	.00034	-.00000	.40457	.00000	.00000
	GRADIENT	.00000	.00000	.00000	.00000	.00000	.00000	.00000	.00000	.00000

AEDC VA422(IA17) ORB AND ET SEPARATING(ET DATA) (ATR117) (24 JUL 75)

REFERENCE DATA

SREF = 2690.0000 SQ.FT. XMRP = 1380.1000 IN. XT
LREF = 1290.3000 IN. YMRP = .0000 IN. YT
BREF = 1290.3000 IN. ZMRP = 416.4000 IN. ZT
SCALE = .0100

PARAMETRIC DATA

DLT-Y = .000 ALPHA = 10.000
BETA = .000 DLTALF = -20.000
DLTBTA = .000 MACH = 5.930
AILRON = .000 ELEVON = .000
GRID = 23.000

RUN NO. 654/ 0 GRADIENT INTERVAL = -5.00/ 5.00

DLT-X	DLT-Z	CN	CA	CLM	CY	CYN	CBL	XCP/L	YCP/L	CPB
.486	803.580	-.13434	.09810	-.02719	.00317	.00057	.00000	.41696	.00000	.00000
.465	901.340	-.13393	.09845	-.02743	.00380	.00088	.00000	.41527	.00000	.00000
.486	999.860	-.13679	.09921	-.02839	.00328	.00070	.00000	.41334	.00000	.00000
	GRADIENT	.00000	.00000	.00000	.00000	.00000	.00000	.00000	.00000	.00000

RUN NO. 655/ 0 GRADIENT INTERVAL = -5.00/ 5.00

DLT-X	DLT-Z	CN	CA	CLM	CY	CYN	CBL	XCP/L	YCP/L	CPB
200.550	796.920	-.13259	.09715	-.02655	.00330	.00079	.00001	.41845	.00000	.00000
200.530	898.780	-.13256	.09900	-.02740	.00464	.00108	-.00000	.41394	.00000	.00000
200.600	1000.100	-.13628	.10095	-.02843	.00359	.00084	.00001	.41261	.00000	.00000
	GRADIENT	.00000	.00000	.00000	.00000	.00000	.00000	.00000	.00000	.00000

RUN NO. 656/ 0 GRADIENT INTERVAL = -5.00/ 5.00

DLT-X	DLT-Z	CN	CA	CLM	CY	CYN	CBL	XCP/L	YCP/L	CPB
400.470	800.070	-.13209	.09747	-.02642	.00373	.00082	-.00000	.41859	.00000	.00000
400.420	899.940	-.13629	.09921	-.02753	.00400	.00074	-.00001	.41721	.00000	.00000
400.490	1000.100	-.13569	.10073	-.02843	.00369	.00088	.00001	.41198	.00000	.00000
	GRADIENT	.00000	.00000	.00000	.00000	.00000	.00000	.00000	.00000	.00000

AEDC VA422(IA17) ORB AND ET SEPARATING(ET DATA) (ATR118) (24 JUL 75)

REFERENCE DATA

SREF = 2690.0000 SQ.FT. XMRP = 1360.1000 IN. XT
LREF = 1290.3000 IN. YMRP = .0000 IN. YT
BREF = 1290.3000 IN. ZMRP = 416.4000 IN. ZT
SCALE = .0100

PARAMETRIC DATA

DLT-Y = .000 ALPHA = 10.000
BETA = 3.000 DLTALF = -5.000
DLTBTA = .000 MACH = 5.930
AILRON = .000 ELEVON = .000
GRID = 27.000

RUN NO. 673/ 0 GRADIENT INTERVAL = -5.00/ 5.00

DLT-X	DLT-Z	CN	CA	CLM	CY	CYN	CBL	XCP/L	YCP/L	CPB
.604	198.810	.00584	.09680	.03719	-.03470	-.01132	.00051	-3.88770	.33036	.00000
.498	298.650	.03189	.09187	.02988	-.03552	-.01239	.00022	-.09625	.31462	.00000
.773	399.310	.05204	.08560	.01954	-.03805	-.01173	.00033	.29606	.34297	.00000
.607	501.050	.05208	.08884	.01933	-.03821	-.01156	.00034	.29905	.34696	.00000
.634	602.200	.05188	.08941	.01904	-.03827	-.01156	.00034	.30192	.34732	.00000
.750	700.670	.05231	.08878	.01915	-.03749	-.01125	.00033	.30252	.34870	.00000
-.109	802.640	.05162	.08895	.01947	-.03887	-.01186	.00036	.29488	.34520	.00000
	GRADIENT	.00000	.00000	.00000	.00000	.00000	.00000	.00000	.00000	.00000

RUN NO. 674/ 0 GRADIENT INTERVAL = -5.00/ 5.00

DLT-X	DLT-Z	CN	CA	CLM	CY	CYN	CBL	XCP/L	YCP/L	CPB
200.460	201.550	-.00621	.09852	.03939	-.03461	-.01053	.00054	4.98910	.34575	.00000
200.600	300.630	.02201	.09475	.03484	-.03493	-.01256	.00035	-.54772	.30701	.00000
200.670	400.840	.05074	.08527	.01938	-.03677	-.01147	.00033	.29152	.34036	.00000
200.630	499.110	.05199	.08828	.01935	-.03695	-.01133	.00033	.29826	.34411	.00000
200.600	597.710	.05341	.08822	.01925	-.03772	-.01134	.00033	.30647	.34837	.00000
200.640	699.010	.05245	.08833	.01951	-.03805	-.01158	.00034	.29842	.34564	.00000
200.700	799.880	.05285	.08897	.02011	-.03903	-.01223	.00035	.29243	.33950	.00000
	GRADIENT	.00000	.00000	.00000	.00000	.00000	.00000	.00000	.00000	.00000

AEDC VA422(IA17) ORB AND ET SEPARATING(ET DATA) (ATR119) (24 JUL 75)

REFERENCE DATA

SREF = 2690.0000 SQ.FT. XMRP = 1360.1000 IN. XT
LREF = 1290.3000 IN. YMRP = .0000 IN. YT
BREF = 1290.3000 IN. ZMRP = 416.4000 IN. ZT
SCALE = .0100

PARAMETRIC DATA

DLT-Y = .000 ALPHA = 10.000
BETA = 3.000 DLTALF = -10.000
DLTBTA = .000 MACH = 5.930
AILRON = .000 ELEVON = .000
GRID = 27.000

RUN NO. 675/ 0 GRADIENT INTERVAL = -5.00/ 5.00

DLT-X	DLT-Z	CN	CA	CLM	CY	CYN	CBL	XCP/L	YCP/L	CPB
.453	399.470	-.03743	.09834	.02051	-.03525	-.01290	.00024	.94117	.30276	.00000
.586	500.290	-.00684	.08715	.00297	-.03590	-.01240	.00029	.86158	.31697	.00000
.684	602.340	-.00743	.08956	.00266	-.03629	-.01214	.00029	.80843	.32463	.00000
.676	701.650	-.00784	.08986	.00244	-.03646	-.01209	.00030	.77561	.32680	.00000
-.927	805.220	-.00848	.08968	.00251	-.03634	-.01202	.00030	.76540	.32729	.00000
	GRADIENT	.00000	.00000	.00000	.00000	.00000	.00000	.00000	.00000	.00000

RUN NO. 676/ 0 GRADIENT INTERVAL = -5.00/ 5.00

DLT-X	DLT-Z	CN	CA	CLM	CY	CYN	CBL	XCP/L	YCP/L	CPB
200.560	400.480	-.05347	.10259	.03003	-.03378	-.01320	.00038	.95068	.28531	.00000
200.720	500.130	-.00561	.08537	.00315	-.03452	-.01201	.00028	.95080	.31522	.00000
200.600	597.640	-.00676	.08908	.00299	-.03639	-.01213	.00029	.86708	.32550	.00000
200.530	698.010	-.00672	.08905	.00270	-.03673	-.01212	.00030	.83926	.32776	.00000
200.560	799.500	-.00695	.09006	.00318	-.03778	-.01276	.00031	.87813	.32242	.00000
	GRADIENT	.00000	.00000	.00000	.00000	.00000	.00000	.00000	.00000	.00000

RUN NO. 677/ 0 GRADIENT INTERVAL = -5.00/ 5.00

DLT-X	DLT-Z	CN	CA	CLM	CY	CYN	CBL	XCP/L	YCP/L	CPB
400.810	402.330	-.06478	.10875	.03561	-.03308	-.01266	.00041	.94238	.29088	.00000
400.570	502.000	-.00698	.08616	.00276	-.03641	-.01254	.00029	.83532	.31776	.00000
400.520	600.840	-.00765	.08924	.00256	-.03638	-.01230	.00029	.79187	.32222	.00000
400.510	700.060	-.00726	.08918	.00298	-.03701	-.01229	.00030	.84550	.32637	.00000
400.510	800.020	-.00744	.09009	.00341	-.03856	-.01337	.00031	.87873	.31607	.00000
	GRADIENT	.00000	.00000	.00000	.00000	.00000	.00000	.00000	.00000	.00000

AEDC VA422(IA17) ORB AND ET SEPARATIN0(ET DATA) (ATR120) (24 JUL 75)

REFERENCE DATA

SREF = 2690.0000 SQ.FT. XMRP = 1380.1000 IN. XT
LREF = 1290.3000 IN. YMRP = .0000 IN. YT
BREF = 1290.3000 IN. ZMRP = 416.4000 IN. ZT
SCALE = .0100

PARAMETRIC DATA

DLT-Y = .000 ALPHA = 10.000
BETA = 3.000 DLTALF = -15.000
DLTBTA = .000 MACH = 5.930
AILRON = .000 ELEVON = .000
GRID = 27.000

RUN NO. 681/ 0 GRADIENT INTERVAL = -5.00/ 5.00

DLT-X	DLT-Z	CN	CA	CLM	CY	CYN	CBL	XCP/L	YCP/L	CPB
.627	501.600	-.11507	.10643	.01451	-.03594	-.01094	.00030	.64644	.34559	.00000
.514	601.800	-.06700	.09034	-.01335	-.03554	-.01175	.00030	.41912	.32728	.00000
.561	702.940	-.06869	.09411	-.01370	-.03629	-.01181	.00030	.41903	.33100	.00000
.547	800.010	-.06821	.09391	-.01382	-.03589	-.01153	.00030	.41681	.33391	.00000
	GRADIENT	.00000	.00000	.00000	.00000	.00000	.00000	.00000	.00000	.00000

RUN NO. 682/ 0 GRADIENT INTERVAL = -5.00/ 5.00

DLT-X	DLT-Z	CN	CA	CLM	CY	CYN	CBL	XCP/L	YCP/L	CPB
200.670	499.450	-.13544	.11718	.02837	-.03629	-.01023	.00044	.69435	.36131	.00000
200.530	598.470	-.06680	.08967	-.01346	-.03472	-.01145	.00029	.41755	.32789	.00000
200.550	696.800	-.06684	.09278	-.01364	-.03514	-.01137	.00030	.41582	.33225	.00000
200.650	798.480	-.06702	.09342	-.01346	-.03633	-.01163	.00031	.41804	.33472	.00000
	GRADIENT	.00000	.00000	.00000	.00000	.00000	.00000	.00000	.00000	.00000

RUN NO. 683/ 0 GRADIENT INTERVAL = -5.00/ 5.00

DLT-X	DLT-Z	CN	CA	CLM	CY	CYN	CBL	XCP/L	YCP/L	CPB
400.400	503.030	-.14372	.12263	.03077	-.03715	-.00980	.00047	.70794	.37411	.00000
400.500	601.730	-.06825	.09172	-.01314	-.03522	-.01155	.00024	.42386	.32935	.00000
400.500	700.210	-.06692	.09298	-.01358	-.03660	-.01169	.00031	.41654	.33519	.00000
400.640	799.990	-.06712	.09373	-.01326	-.03858	-.01244	.00033	.42030	.33298	.00000
	GRADIENT	.00000	.00000	.00000	.00000	.00000	.00000	.00000	.00000	.00000

DATE 25 JUL 75 TABULATED SOURCE DATA - IA17A (ATR121) (24 JUL 75)

AEDC VA422(IA17) ORB AND ET SEPARATING(ET DATA)

REFERENCE DATA

SREF = 2690.0000 SQ.FT. XMRP = 1360.1000 IN. XT
LREF = 1290.3000 IN. YMRP = .0000 IN. YT
BREF = 1290.3000 IN. ZMRP = 416.4000 IN. ZT
SCALE = .0100

PARAMETRIC DATA

DLT-Y = .000 ALPHA = 10.000
BETA = 3.000 DLTALF = -20.000
DLTBTA = .000 MACH = 5.930
AILRON = .000 ELEVON = .000
GRID = 27.000

RUN NO. 684/ 0 GRADIENT INTERVAL = -5.00/ 5.00

DLT-X	DLT-Z	CN	CA	CLM	CY	CYN	CBL	XCP/L	YCP/L	CPB
.536	803.460	-.13827	.09904	-.02611	-.03868	-.01047	.00030	.42642	.36906	.00000
.529	901.250	-.13746	.10001	-.02630	-.03863	-.01036	.00030	.42467	.37092	.00000
.486	999.990	-.14020	.10121	-.02653	-.04033	-.01091	.00032	.42615	.36934	.00000
	GRADIENT	.00000	.00000	.00000	.00000	.00000	.00000	.00000	.00000	.00000

RUN NO. 685/ 0 GRADIENT INTERVAL = -5.00/ 5.00

DLT-X	DLT-Z	CN	CA	CLM	CY	CYN	CBL	XCP/L	YCP/L	CPB
200.530	797.110	-.13717	.09938	-.02589	-.03934	-.01046	.00031	.42648	.37249	.00000
200.540	898.920	-.13725	.10016	-.02599	-.03936	-.01077	.00032	.42603	.36724	.00000
200.570	1000.100	-.13979	.10078	-.02659	-.04072	-.01121	.00033	.42546	.36603	.00000
	GRADIENT	.00000	.00000	.00000	.00000	.00000	.00000	.00000	.00000	.00000

RUN NO. 686/ 0 GRADIENT INTERVAL = -5.00/ 5.00

DLT-X	DLT-Z	CN	CA	CLM	CY	CYN	CBL	XCP/L	YCP/L	CPB
400.610	800.230	-.13711	.09981	-.02560	-.04027	-.01084	.00031	.42788	.37030	.00000
400.530	899.970	-.13741	.10118	-.02625	-.04079	-.01124	.00033	.42488	.36587	.00000
400.580	1000.100	-.14120	.10148	-.02668	-.04339	-.01220	.00035	.42634	.36190	.00000
	GRADIENT	.00000	.00000	.00000	.00000	.00000	.00000	.00000	.00000	.00000

AEDC VA422(IA17) ORB AND ET SEPARATING(ET DATA) (ATR122) (24 JUL 75)

REFERENCE DATA

SREF = 2690.0000 SQ.FT. XMRP = 1360.1000 IN. XT
LREF = 1290.3000 IN. YMRP = .0000 IN. YT
BREF = 1290.3000 IN. ZMRP = 416.4000 IN. ZT
SCALE = .0100

PARAMETRIC DATA

DLT-Y = .000 ALPHA = .000
BETA = .000 DLTALF = .000
DLTBTA = .000 MACH = 7.980
AILRON = .000 ELEVON = .000
GRID = 16.000

ORIGINAL PAGE IS OF POOR QUALITY

RUN NO. 717/ 0 GRADIENT INTERVAL = -5.00/ 5.00

DLT-X	DLT-Z	CN	CA	CLM	CY	CYN	CBL	XCP/L	YCP/L	CPB
.435	18.419	-.02971	.08335	.00353	.00324	.00045	.00025	.64131	.00000	.00000
.518	99.435	-.02671	.08381	.00610	.00280	.00006	.00011	.71803	.00000	.00000
.464	201.340	-.01192	.08254	.00554	.00116	-.00001	.00011	.88334	.00000	.00000
.443	302.350	-.00416	.08049	.00093	.00060	.00002	.00010	.71450	.00000	.00000
.587	400.450	-.00436	.08063	.00102	.00037	-.00002	.00010	.72146	.00000	.00000
.519	500.140	-.00494	.08098	.00110	.00071	.00021	.00009	.71406	.00000	.00000
	GRADIENT	.00000	.00000	.00000	.00000	.00000	.00000	.00000	.00000	.00000

RUN NO. 718/ 0 GRADIENT INTERVAL = -5.00/ 5.00

DLT-X	DLT-Z	CN	CA	CLM	CY	CYN	CBL	XCP/L	YCP/L	CPB
200.390	23.594	-.03863	.08500	-.00421	.00394	.00013	.00025	.48229	.53453	.00000
200.550	99.538	-.03113	.08587	.00749	.00325	-.00005	.00011	.72634	.00000	.00000
200.490	199.400	-.01527	.08341	.00740	.00173	-.00026	.00010	.89718	.00000	.00000
200.460	297.840	-.00484	.08044	.00167	.00110	.00027	.00009	.79971	.00000	.00000
200.420	398.620	-.00509	.08068	.00114	.00028	.00002	.00010	.71474	.00000	.00000
200.530	500.030	-.00494	.08065	.00103	.00064	.00013	.00010	.70373	.00000	.00000
	GRADIENT	.00000	.00000	.00000	.00000	.00000	.00000	.00000	.00000	.00000

AEDC VA422(IA17) ORB AND ET SEPARATING(ET DATA) (ATR123) (24 JUL 75)

REFERENCE DATA

SREF = 2690.0000 SQ.FT. XMRP = 1360.1000 IN. XT
LREF = 1290.3000 IN. YMRP = .0000 IN. YT
BREF = 1290.3000 IN. ZMRP = 416.4000 IN. ZT
SCALE = .0100

PARAMETRIC DATA

DLT-Y = .000 ALPHA = .000
BETA = .000 DLTALF = -5.000
DLTBTA = .000 MACH = 7.980
AILRON = .000 ELEVON = .000
GRID = 16.000

RUN NO. 721/ 0 GRADIENT INTERVAL = -5.00/ 5.00

DLT-X	DLT-Z	CN	CA	CLM	CY	CYN	CBL	XCP/L	YCP/L	CPB
.509	204.310	-.13810	.11188	.02209	.00480	-.00169	.00043	.67008	.80435	.00000
.502	302.860	-.07270	.08820	-.00903	.00230	-.00045	.00015	.47154	.00000	.00000
.463	401.680	-.06147	.08225	-.01632	.00102	.00044	.00008	.37288	.00000	.00000
.452	500.250	-.06110	.08300	-.01639	.00202	.00035	.00006	.37091	.00000	.00000
-.033	599.110	-.06124	.08329	-.01634	.00142	.00040	.00007	.37191	.00000	.00000
	GRADIENT	.00000	.00000	.00000	.00000	.00000	.00000	.00000	.00000	.00000

RUN NO. 722/ 0 GRADIENT INTERVAL = -5.00/ 5.00

DLT-X	DLT-Z	CN	CA	CLM	CY	CYN	CBL	XCP/L	YCP/L	CPB
200.480	198.560	-.14339	.11683	.02491	.00654	-.00197	.00034	.67973	.76896	.00000
200.440	296.560	-.07770	.08729	-.00711	.00170	.00035	.00008	.49444	.00000	.00000
200.430	397.020	-.06378	.08206	-.01461	.00137	.00024	.00007	.39826	.00000	.00000
200.410	499.380	-.06177	.08300	-.01651	.00204	.00039	.00007	.37160	.00000	.00000
200.450	600.080	-.06116	.08291	-.01639	.00202	.00055	.00007	.37116	.00000	.00000
	GRADIENT	.00000	.00000	.00000	.00000	.00000	.00000	.00000	.00000	.00000

AEDC VA422(IA17) ORB AND ET SEPARATING(ET DATA) (ATR124) (24 JUL 75)

REFERENCE DATA

SREF = 2690.0000 SQ.FT. XMRP = 1360.1000 IN. XT
LREF = 1290.3000 IN. YMRP = .0000 IN. YT
BREF = 1290.3000 IN. ZMRP = 416.4000 IN. ZT
SCALE = .0100

PARAMETRIC DATA

DLT-Y = .000 ALPHA = .000
BETA = .000 DLTALF = -10.000
DLTBTA = .000 MACH = 7.980
AILRON = .000 ELEVON = .000
GRID = 16.000

RUN NO. 723/ 0 GRADIENT INTERVAL = -5.00/ 5.00

DLT-X	DLT-Z	CN	CA	CLM	CY	CYN	CBL	XCP/L	YCP/L	CPB
.540	404.290	-.14701	.10069	-.01615	.00421	-.00027	.00028	.48159	.00000	.00000
.545	501.170	-.12596	.08943	-.02959	.00308	.00071	.00011	.39420	.00000	.00000
.587	600.200	-.12589	.08987	-.02989	.00288	.00074	.00011	.39248	.00000	.00000
.585	750.060	-.12694	.09068	-.03022	.00231	.00056	.00012	.39201	.00000	.00000
-.040	802.280	-.12726	.09022	-.03038	.00284	.00070	.00012	.39159	.00000	.00000
	GRADIENT	.00000	.00000	.00000	.00000	.00000	.00000	.00000	.00000	.00000

AEDC VA422(IA17) ORB AND ET SEPARATING(ET DATA) (ATR124) (24 JUL 75)

REFERENCE DATA

SREF = 2690.0000 SQ.FT. XMRP = 1360.1000 IN. XT
LREF = 1290.3000 IN. YMRP = .0000 IN. YT
BREF = 1290.3000 IN. ZMRP = 416.4000 IN. ZT
SCALE = .0100

PARAMETRIC DATA

DLT-Y = .000 ALPHA = .000
BETA = .000 DLTALF = -10.000
DLTBTA = .000 MACH = 7.980
AILRON = .000 ELEVON = .000
GRID = 16.000

RUN NO. 724/ 0 GRADIENT INTERVAL = -5.00/ 5.00

DLT-X	DLT-Z	CN	CA	CLM	CY	CYN	CBL	XCP/L	YCP/L	CPB
200.520	397.900	-.15717	.10406	-.01013	.00396	-.00017	.00030	.51330	.00000	.00000
200.480	497.550	-.13246	.09157	-.02488	.00275	.00062	.00015	.42711	.00000	.00000
200.450	599.950	-.12520	.08915	-.02964	.00291	.00071	.00011	.39295	.00000	.00000
200.480	750.050	-.12584	.08993	-.03013	.00289	.00072	.00011	.39106	.00000	.00000
200.470	800.210	-.12652	.08986	-.03027	.00292	.00069	.00011	.39121	.00000	.00000
	GRADIENT	.00000	.00000	.00000	.00000	.00000	.00000	.00000	.00000	.00000

RUN NO. 725/ 0 GRADIENT INTERVAL = -5.00/ 5.00

DLT-X	DLT-Z	CN	CA	CLM	CY	CYN	CBL	XCP/L	YCP/L	CPB
400.480	401.470	-.15544	.10090	-.01362	.00353	-.00010	.00026	.49711	.00000	.00000
400.340	500.070	-.13943	.09629	-.02095	.00384	.00002	.00023	.45337	.00000	.00000
400.500	600.150	-.12463	.08929	-.02968	.00212	.00066	.00011	.39198	.00000	.00000
400.480	750.100	-.12565	.08985	-.03011	.00296	.00082	.00011	.39090	.00000	.00000
400.380	800.140	-.12626	.09041	-.03019	.00269	.00071	.00011	.39132	.00000	.00000
	GRADIENT	.00000	.00000	.00000	.00000	.00000	.00000	.00000	.00000	.00000

AEDC VA422(IA17) ORB AND ET SEPARATING(ET DATA) (ATR125) (24 JUL 75)

REFERENCE DATA

SREF = 2690.0000 SQ.FT. XMRP = 1360.1000 IN. XT
LREF = 1290.3000 IN. YMRP = .0000 IN. YT
BREF = 1290.3000 IN. ZMRP = 416.4000 IN. ZT
SCALE = .0100

PARAMETRIC DATA

DLT-Y = .000 ALPHA = .000
BETA = .000 DLTALF = -15.000
DLTBTA = .000 MACH = 7.980
AILRON = .000 ELEVON = .000
GRID = 16.000

RUN NO. 729/ 0 GRADIENT INTERVAL = -5.00/ 5.00

DLT-X	DLT-Z	CN	CA	CLM	CY	CYN	CBL	XCP/L	YCP/L	CPB
.412	500.620	-.25525	.12330	-.00941	.00729	-.00041	.00031	.53259	.59760	.00000
.471	601.610	-.21837	.10042	-.03392	.00341	.00072	.00017	.44982	.00000	.00000
.528	750.300	-.21348	.10187	-.03756	.00353	.00065	.00019	.43543	.00000	.00000
.518	800.290	-.21399	.10259	-.03774	.00317	.00064	.00019	.43514	.00000	.00000
	GRADIENT	.00000	.00000	.00000	.00000	.00000	.00000	.00000	.00000	.00000

DATE 28 JUL 75 TABULATED SOURCE DATA - IA17A

AEDC VA422(IA17) ORB AND ET SEPARATING(ET DATA) (ATR125) (24 JUL 75)

REFERENCE DATA

SREF = 2690.0000 SQ.FT. XMRP = 1360.1000 IN. XT
LREF = 1290.3000 IN. YMRP = .0000 IN. YT
BREF = 1290.3000 IN. ZMRP = 416.4000 IN. ZT
SCALE = .0100

PARAMETRIC DATA

DLT-Y = .000 ALPHA = .000
BETA = .000 DLTALF = -15.000
DLTBTA = .000 MACH = 7.980
AILRON = .000 ELEVON = .000
GRID = 16.000

RUN NO. 730/ 0 GRADIENT INTERVAL = -5.00/ 5.00

DLT-X	DLT-Z	CN	CA	CLM	CY	CYN	CBL	XCP/L	YCP/L	CPB
200.400	500.310	-.27311	.12740	-.00234	.00845	-.00154	.00035	.55236	.68577	.00000
200.380	596.620	-.23212	.10853	-.02563	.00622	.00017	.00027	.48120	.53927	.00000
200.410	750.220	-.21380	.10104	-.03755	.00544	.00108	.00018	.43565	.41980	.00000
200.490	800.300	-.21458	.10125	-.03770	.00342	.00046	.00019	.43559	.00000	.00000
	GRADIENT	.00000	.00000	.00000	.00000	.00000	.00000	.00000	.00000	.00000

RUN NO. 731/ 0 GRADIENT INTERVAL = -5.00/ 5.00

DLT-X	DLT-Z	CN	CA	CLM	CY	CYN	CBL	XCP/L	YCP/L	CPB
400.330	501.170	-.26059	.12057	-.01150	.00766	-.00105	.00035	.52751	.65401	.00000
400.310	600.120	-.23879	.11314	-.02128	.00562	-.00033	.00033	.49608	.59922	.00000
400.350	750.240	-.21319	.10111	-.03756	.00403	.00075	.00018	.43526	.00000	.00000
400.360	800.280	-.21424	.10080	-.03765	.00449	.00112	.00019	.43557	.00000	.00000
	GRADIENT	.00000	.00000	.00000	.00000	.00000	.00000	.00000	.00000	.00000

AEDC VA422(IA17) ORB AND ET SEPARATING(ET DATA) (ATR127) (24 JUL 75)

REFERENCE DATA

SREF = 2690.0000 SQ.FT. XMRP = 1360.1000 IN. XT
LREF = 1290.3000 IN. YMRP = .0000 IN. YT
BREF = 1290.3000 IN. ZMRP = 416.4000 IN. ZT
SCALE = .0100

PARAMETRIC DATA

DLT-Y = .000 ALPHA = .000
BETA = .000 DLTALF = -20.000
DLTBTA = .000 MACH = 7.980
AILRON = .000 ELEVON = .000
GRID = 16.000

RUN NO. 738/ 0 GRADIENT INTERVAL = -5.00/ 5.00

DLT-X	DLT-Z	CN	CA	CLM	CY	CYN	CBL	XCP/L	YCP/L	CPB
.487	802.300	-.32798	.12028	-.03623	.00849	.00011	.00036	.48116	.54930	.00000
.473	900.390	-.32857	.12038	-.03615	.00805	.00021	.00038	.48148	.53973	.00000
.489	1000.200	-.32880	.12050	-.03544	.00795	-.00000	.00037	.48303	.55874	.00000
	GRADIENT	.00000	.00000	.00000	.00000	.00000	.00000	.00000	.00000	.00000

AEDC VA422(IA17) ORB AND ET SEPARATING(ET DATA) (ATR127) (24 JUL 75)

REFERENCE DATA

SREF = 2690.0000 SQ.FT. XMRP = 1380.1000 IN. XT
LREF = 1290.3000 IN. YMRP = .0000 IN. YT
BREF = 1290.3000 IN. ZMRP = 416.4000 IN. ZT
SCALE = .0100

PARAMETRIC DATA

DLT-Y = .000 ALPHA = .000
BETA = .000 DLTALF = -20.000
DLTBTA = .000 MACH = 7.980
AILRON = .000 ELEVON = .000
GRID = 16.000

RUN NO. 732/ 0 GRADIENT INTERVAL = -5.00/ 5.00

DLT-X	DLT-Z	CN	CA	CLM	CY	CYN	CBL	XCP/L	YCP/L	CPB
200.330	751.400	-.34261	.12210	-.02612	.00745	.00020	.00030	.50508	.53979	.00000
200.350	800.420	-.32737	.11938	-.03516	.00775	.00031	.00033	.48330	.53072	.00000
200.370	900.400	-.32780	.11990	-.03583	.00759	.00016	.00037	.48198	.54347	.00000
200.390	1000.200	-.32727	.12011	-.03528	.00758	.00015	.00037	.48303	.54460	.00000
	GRADIENT	.00000	.00000	.00000	.00000	.00000	.00000	.00000	.00000	.00000

RUN NO. 733/ 0 GRADIENT INTERVAL = -5.00/ 5.00

DLT-X	DLT-Z	CN	CA	CLM	CY	CYN	CBL	XCP/L	YCP/L	CPB
400.420	748.880	-.35349	.13208	-.01851	.00839	-.00068	.00041	.52176	.61532	.00000
400.590	800.560	-.33837	.11977	-.02950	.00732	.00042	.00031	.49743	.51782	.00000
400.410	900.290	-.32763	.11966	-.03568	.00726	.00013	.00037	.48227	.54594	.00000
400.460	1000.300	-.32711	.11971	-.03556	.00583	-.00015	.00037	.48239	.57678	.00000
	GRADIENT	.00000	.00000	.00000	.00000	.00000	.00000	.00000	.00000	.00000

AEDC VA422(IA17) ORB AND ET SEPARATING(ET DATA) (ATR128) (24 JUL 75)

REFERENCE DATA

SREF = 2690.0000 SQ.FT. XMRP = 1380.1000 IN. XT
LREF = 1290.3000 IN. YMRP = .0000 IN. YT
BREF = 1290.3000 IN. ZMRP = 416.4000 IN. ZT
SCALE = .0100

PARAMETRIC DATA

DLT-Y = .000 ALPHA = .000
BETA = .000 DLTALF = .000
DLTBTA = .000 MACH = 7.980
AILRON = .000 ELEVON = .000
GRID = 16.000 PO = 300.000

RUN NO. 868/ 0 GRADIENT INTERVAL = -5.00/ 5.00

DLT-X	DLT-Z	CN	CA	CLM	CY	CYN	CBL	XCP/L	YCP/L	CPB
.453	18.942	-.03493	.08552	.00573	.00060	-.00038	.00023	.67297	.00000	.00000
.487	99.799	-.02958	.08482	.00694	.00032	-.00061	.00012	.72233	.00000	.00000
.588	201.130	-.01127	.08061	.00379	-.00128	-.00065	.00010	.79303	.00000	.00000
.557	301.660	-.00532	.07920	.00059	-.00182	-.00044	.00011	.63584	.00000	.00000
.450	400.340	-.00541	.07990	.00060	-.00220	-.00047	.00009	.63645	.00000	.00000
.557	497.530	-.00534	.08102	.00072	-.00204	-.00047	.00009	.65186	.00000	.00000
	GRADIENT	.00000	.00000	.00000	.00000	.00000	.00000	.00000	.00000	.00000

DATE 25 JUL 75 TABULATED SOURCE DATA - IA17A

AEDC VA422(IA17) ORB AND ET SEPARATING(ET DATA) (ATR128) (24 JUL 75)

REFERENCE DATA

SREF = 2690.0000 SQ.FT. XMRP = 1360.1000 IN. XT
LREF = 1290.3000 IN. YMRP = .0000 IN. YT
BREF = 1290.3000 IN. ZMRP = 416.4000 IN. ZT
SCALE = .0100

PARAMETRIC DATA

DLT-Y = .000 ALPHA = .000
BETA = .000 DLTALF = .000
DLTBTA = .000 MACH = 7.980
AILRON = .000 ELEVON = .000
GRID = 16.000 PO = 300.000

RUN NO. 869/ 0 GRADIENT INTERVAL = -5.00/ 5.00

DLT-X	DLT-Z	CN	CA	CLM	CY	CYN	CBL	XCP/L	YCP/L	CPB
200.470	22.544	-.04409	.08640	-.00180	.00210	-.00063	.00032	.52983	.00000	.00000
200.520	99.419	-.03348	.08650	.00881	-.00014	-.00080	.00009	.74230	.00000	.00000
200.510	199.620	-.01499	.08243	.00621	-.00052	-.00076	.00013	.84776	.00000	.00000
200.530	298.450	-.00550	.07889	.00112	-.00112	-.00032	.00007	.70038	.00000	.00000
200.580	399.070	-.00549	.07909	.00071	-.00152	-.00030	.00008	.64800	.00000	.00000
200.540	500.010	-.00533	.07975	.00058	-.00125	-.00053	.00007	.63482	.00000	.00000
	GRADIENT	.00000	.00000	.00000	.00000	.00000	.00000	.00000	.00000	.00000

AEDC VA422(IA17) ORB AND ET SEPARATING(ET DATA) (ATR129) (24 JUL 75)

REFERENCE DATA

SREF = 2690.0000 SQ.FT. XMRP = 1360.1000 IN. XT
LREF = 1290.3000 IN. YMRP = .0000 IN. YT
BREF = 1290.3000 IN. ZMRP = 416.4000 IN. ZT
SCALE = .0100

PARAMETRIC DATA

DLT-Y = .000 ALPHA = .000
BETA = .000 DLTALF = -5.000
DLTBTA = .000 MACH = 7.980
AILRON = .000 ELEVON = .000
GRID = 16.000 PO = 300.000

RUN NO. 872/ 0 GRADIENT INTERVAL = -5.00/ 5.00

DLT-X	DLT-Z	CN	CA	CLM	CY	CYN	CBL	XCP/L	YCP/L	CPB
.654	203.240	-.14337	.11412	.02445	.00453	-.00217	.00050	.67750	.00000	.00000
.466	302.030	-.07220	.08781	-.00987	.00067	-.00041	.00011	.46286	.00000	.00000
.569	401.150	-.06231	.08171	-.01645	.00050	-.00017	.00006	.37394	.00000	.00000
.568	500.150	-.06228	.08271	-.01652	.00015	-.00009	.00006	.37309	.00000	.00000
-.113	599.450	-.06187	.08267	-.01632	.00021	-.00023	.00005	.37399	.00000	.00000
	GRADIENT	.00000	.00000	.00000	.00000	.00000	.00000	.00000	.00000	.00000

RUN NO. 873/ 0 GRADIENT INTERVAL = -5.00/ 5.00

DLT-X	DLT-Z	CN	CA	CLM	CY	CYN	CBL	XCP/L	YCP/L	CPB
200.420	198.940	-.14798	.11939	.02703	.00456	-.00236	.00038	.68596	.00000	.00000
200.510	297.500	-.07798	.08691	-.00734	-.00063	.00017	.00004	.49258	.00000	.00000
200.450	398.050	-.05444	.08178	-.01494	-.00004	-.00049	.00007	.39640	.00000	.00000
200.410	499.580	-.06308	.08130	-.01634	-.00082	-.00038	.00007	.37736	.00000	.00000
200.470	600.030	-.06295	.08289	-.01634	.00103	-.00006	.00005	.37702	.00000	.00000
	GRADIENT	.00000	.00000	.00000	.00000	.00000	.00000	.00000	.00000	.00000

DATE 25 JUL 75 TABULATED SOURCE DATA - IA17A

AEDC VA422(IA17) ORB AND ET SEPARATING(ET DATA) (ATR130) (24 JUL 75)

REFERENCE DATA

SREF = 2690.0000 SQ.FT. XMRP = 1360.1000 IN. XT
LREF = 1290.3000 IN. YMRP = .0000 IN. YT
BREF = 1290.3000 IN. ZMRP = 416.4000 IN. ZT
SCALE = .0100

PARAMETRIC DATA

DLT-Y = .000 ALPHA = .000
BETA = .000 DLTALF = -10.000
DLTBTA = .000 MACH = 7.980
AILRON = .000 ELEVON = .000
GRID = 16.000 PO = 300.000

RUN NO. 874/ 0 GRADIENT INTERVAL = -5.00/ 5.00

DLT-X	DLT-Z	CN	CA	CLM	CY	CYN	CBL	XCP/L	YCP/L	CPB
.550	403.110	-.14705	.10016	-.01659	.00182	-.00085	.00030	.47951	.00000	.00000
.488	500.990	-.12711	.08828	-.02986	.00073	.00026	.00012	.39420	.00000	.00000
.557	600.080	-.12721	.08974	-.03001	.00077	.00028	.00012	.39352	.00000	.00000
.579	750.020	-.12854	.08982	-.03058	.00062	.00017	.00010	.39214	.00000	.00000
-.280	801.740	-.12863	.08947	-.03063	-.00039	-.00025	.00013	.39198	.00000	.00000
	GRADIENT	.00000	.00000	.00000	.00000	.00000	.00000	.00000	.00000	.00000

RUN NO. 875/ 0 GRADIENT INTERVAL = -5.00/ 5.00

DLT-X	DLT-Z	CN	CA	CLM	CY	CYN	CBL	XCP/L	YCP/L	CPB
200.410	398.500	-.15914	.10438	-.01004	.00157	-.00065	.00031	.51425	.00000	.00000
200.440	498.340	-.13304	.09123	-.02566	.00036	-.00012	.00017	.42361	.00000	.00000
200.440	599.880	-.12671	.08843	-.02983	.00025	-.00003	.00011	.39386	.00000	.00000
200.450	750.120	-.12794	.08879	-.03039	.00087	.00022	.00009	.39239	.00000	.00000
200.450	800.130	-.12814	.08907	-.03048	.00018	.00004	.00012	.39213	.00000	.00000
	GRADIENT	.00000	.00000	.00000	.00000	.00000	.00000	.00000	.00000	.00000

RUN NO. 876/ 0 GRADIENT INTERVAL = -5.00/ 5.00

DLT-X	DLT-Z	CN	CA	CLM	CY	CYN	CBL	XCP/L	YCP/L	CPB
400.450	401.090	-.15667	.10127	-.01355	.00197	-.00056	.00028	.49790	.00000	.00000
400.330	500.060	-.13961	.09614	-.02160	.00157	-.00030	.00024	.45024	.00000	.00000
400.410	600.110	-.12637	.08913	-.02997	.00054	.00015	.00010	.39263	.00000	.00000
400.400	750.020	-.12743	.08878	-.03035	.00024	-.00005	.00011	.39193	.00000	.00000
400.350	800.120	-.12742	.08868	-.03035	.00129	.00038	.00011	.39192	.00000	.00000
	GRADIENT	.00000	.00000	.00000	.00000	.00000	.00000	.00000	.00000	.00000

ORIGINAL PAGE IS OF POOR QUALITY

DATE 25 JUL 75 TABULATED SOURCE DATA - IA17A (ATR131) (24 JUL 75)

AEDC VA422(IA17) ORB AND ET SEPARATING(ET DATA)

REFERENCE DATA

SREF = 2690.0000 SQ.FT. XMRP = 1360.1000 IN. XT
LREF = 1290.3000 IN. YMRP = .0000 IN. YT
BREF = 1290.3000 IN. ZMRP = 416.4000 IN. ZT
SCALE = .0100

PARAMETRIC DATA

DLT-Y = .000 ALPHA = .000
BETA = 3.000 DLTALF = .000
DLTBTA = .000 MACH = 7.980
AILRON = .000 ELEVON = .000
GRID = 17.000 PO = 420.000

RUN NO. 747/ 0 GRADIENT INTERVAL = -5.00/ 5.00

DLT-X	DLT-Z	CN	CA	CLM	CY	CYN	CBL	XCP/L	YCP/L	CPB
.534	18.217	-.03184	.08454	.00467	-.03601	-.01061	.00058	.66072	.35241	.00000
.490	99.562	-.03002	.08474	.00726	-.03451	-.01072	.00053	.72737	.34131	.00000
.507	201.490	-.01219	.08413	.00551	-.03387	-.01223	.00025	.87420	.30595	.00000
.583	302.370	-.00601	.08177	.00116	-.03475	-.01226	.00039	.69327	.31192	.00000
.600	400.530	-.00546	.08195	.00132	-.03397	-.01218	.00038	.72773	.30786	.00000
.659	500.080	-.00539	.08230	.00147	-.03407	-.01207	.00038	.74853	.31085	.00000
	GRADIENT	.00000	.00000	.00000	.00000	.00000	.00000	.00000	.00000	.00000

RUN NO. 748/ 0 GRADIENT INTERVAL = -5.00/ 5.00

DLT-X	DLT-Z	CN	CA	CLM	CY	CYN	CBL	XCP/L	YCP/L	CPB
200.560	23.758	-.04388	.08715	-.00215	-.03473	-.00994	.00071	.52416	.35850	.00000
200.540	99.308	-.03313	.08639	.00889	-.03577	-.01088	.00048	.74585	.34575	.00000
200.520	199.310	-.01601	.08502	.00795	-.03370	-.01255	.00032	.90536	.29825	.00000
200.480	297.730	-.00579	.08135	.00203	-.03298	-.01164	.00035	.80313	.30755	.00000
200.540	398.730	-.00597	.08213	.00134	-.03460	-.01212	.00038	.71530	.31368	.00000
200.540	499.920	-.00505	.08215	.00140	-.03426	-.01199	.00039	.75237	.31391	.00000
	GRADIENT	.00000	.00000	.00000	.00000	.00000	.00000	.00000	.00000	.00000

AEDC VA422(IA17) ORB AND ET SEPARATING(ET DATA) (ATR132) (24 JUL 75)

REFERENCE DATA

SREF = 2690.0000 SQ.FT. XMRP = 1360.1000 IN. XT
LREF = 1290.3000 IN. YMRP = .0000 IN. YT
BREF = 1290.3000 IN. ZMRP = 418.4000 IN. ZT
SCALE = .0100

PARAMETRIC DATA

DLT-Y = .000 ALPHA = .000
BETA = 3.000 DLTALF = -5.000
DLTBTA = .000 MACH = 7.980
AILRON = .000 ELEVON = .000
GRID = 17.000 PO = 420.000

RUN NO. 751/ 0 GRADIENT INTERVAL = -5.00/ 5.00

DLT-X	DLT-Z	CN	CA	CLM	CY	CYN	CBL	XCP/L	YCP/L	CPB
.605	204.390	-.15005	.11992	.02974	-.02832	-.01309	.00083	.69678	.23542	.00000
.575	303.020	-.07370	.09092	-.00888	-.03313	-.01131	.00031	.47412	.31984	.00000
.510	401.620	-.06252	.08487	-.01577	-.03360	-.01133	.00038	.38215	.32273	.00000
.524	500.230	-.06263	.08549	-.01569	-.03313	-.01133	.00038	.38333	.31934	.00000
.103	598.990	-.06246	.08549	-.01570	-.03455	-.01177	.00039	.38270	.32022	.00000
	GRADIENT	.00000	.00000	.00000	.00000	.00000	.00000	.00000	.00000	.00000

RUN NO. 752/ 0 GRADIENT INTERVAL = -5.00/ 5.00

DLT-X	DLT-Z	CN	CA	CLM	CY	CYN	CBL	XCP/L	YCP/L	CPB
200.550	198.570	-.15340	.12132	.03050	-.03221	-.01241	.00068	.69723	.28926	.00000
200.510	296.480	-.07983	.09078	-.00598	-.03406	-.01144	.00035	.50600	.32373	.00000
200.530	397.110	-.06528	.08500	-.01410	-.03341	-.01182	.00034	.40742	.31121	.00000
200.580	499.420	-.06353	.08513	-.01566	-.03372	-.01161	.00039	.38613	.31778	.00000
200.410	600.060	-.06332	.08555	-.01583	-.03427	-.01164	.00040	.38367	.32111	.00000
	GRADIENT	.00000	.00000	.00000	.00000	.00000	.00000	.00000	.00000	.00000

AEDC VA422(IA17) ORB AND ET SEPARATING(ET DATA) (ATR133) (24 JUL 75)

REFERENCE DATA

SREF = 2690.0000 SQ.FT. XMRP = 1360.1000 IN. XT
LREF = 1290.3000 IN. YMRP = .0000 IN. YT
BREF = 1290.3000 IN. ZMRP = 418.4000 IN. ZT
SCALE = .0100

PARAMETRIC DATA

DLT-Y = .000 ALPHA = .000
BETA = 3.000 DLTALF = -10.000
DLTBTA = .000 MACH = 7.980
AILRON = .000 ELEVON = .000
GRID = 17.000 PO = 420.000

RUN NO. 753/ 0 GRADIENT INTERVAL = -5.00/ 5.00

DLT-X	DLT-Z	CN	CA	CLM	CY	CYN	CBL	XCP/L	YCP/L	CPB
.583	404.280	-.14924	.10515	-.01527	-.03385	-.01047	.00043	.48688	.34235	.00000
.533	501.200	-.12980	.09295	-.02808	-.03465	-.00991	.00034	.40697	.35859	.00000
.828	600.170	-.12906	.09371	-.02873	-.03533	-.01008	.00039	.40281	.35897	.00000
.829	750.080	-.13018	.09357	-.02885	-.03505	-.00987	.00038	.40350	.38168	.00000
.032	802.090	-.13018	.09400	-.02885	-.03545	-.01008	.00039	.40347	.38011	.00000
	GRADIENT	.00000	.00000	.00000	.00000	.00000	.00000	.00000	.00000	.00000

DATE 25 JUL 75 TABULATED SOURCE DATA - IA17A

AEDC VA422(IA17) ORB AND ET SEPARATING(ET DATA) (ATR133) (24 JUL 75)

REFERENCE DATA

SREF = 2690.0000 SQ.FT. XMRP = 1360.1000 IN. XT
LREF = 1290.3000 IN. YMRP = .0000 IN. YT
BREF = 1290.3000 IN. ZMRP = 416.4000 IN. ZT
SCALE = .0100

PARAMETRIC DATA

DLT-Y = .000 ALPHA = .000
BETA = 3.000 DLTALF = -10.000
DLTBTA = .000 MACH = 7.980
AILRON = .000 ELEVON = .000
GRID = 17.000 PO = 420.000

RUN NO. 754/ 0 GRADIENT INTERVAL = -5.00/ 5.00

DLT-X	DLT-Z	CN	CA	CLM	CY	CYN	CBL	XCP/L	YCP/L	CPB
200.480	397.830	-.15514	.10414	-.01236	-.03593	-.00997	.00039	.50270	.36443	.00000
200.500	497.690	-.13456	.09571	-.02360	-.03565	-.01017	.00028	.43581	.35907	.00000
200.590	599.900	-.12844	.09259	-.02854	-.03580	-.01013	.00039	.40312	.36059	.00000
200.480	750.040	-.12966	.09314	-.02873	-.03677	-.01047	.00040	.40356	.35953	.00000
200.460	800.130	-.12952	.09282	-.02880	-.03628	-.01046	.00039	.40301	.35691	.00000
	GRADIENT	.00000	.00000	.00000	.00000	.00000	.00000	.00000	.00000	.00000

RUN NO. 755/ 0 GRADIENT INTERVAL = -5.00/ 5.00

DLT-X	DLT-Z	CN	CA	CLM	CY	CYN	CBL	XCP/L	YCP/L	CPB
400.400	401.660	-.15984	.10444	-.01179	-.03685	-.00939	.00044	.50680	.38025	.00000
400.340	500.010	-.14148	.10221	-.01940	-.03553	-.01005	.00031	.46254	.36078	.00000
400.310	600.120	-.12816	.09297	-.02857	-.03602	-.01002	.00039	.40259	.36400	.00000
400.370	750.020	-.12900	.09311	-.02879	-.03668	-.01046	.00040	.40242	.35904	.00000
400.380	800.110	-.12901	.09329	-.02879	-.03628	-.01025	.00038	.40245	.36091	.00000
	GRADIENT	.00000	.00000	.00000	.00000	.00000	.00000	.00000	.00000	.00000

AEDC VA422(IA17) ORB AND ET SEPARATING(ET DATA) (ATR134) (24 JUL 75)

REFERENCE DATA

SREF = 2690.0000 SQ.FT. XMRP = 1360.1000 IN. XT
LREF = 1290.3000 IN. YMRP = .0000 IN. YT
BREF = 1290.3000 IN. ZMRP = 416.4000 IN. ZT
SCALE = .0100

PARAMETRIC DATA

DLT-Y = .000 ALPHA = .000
BETA = 3.000 DLTALF = -15.000
DLTBTA = .000 MACH = 7.980
AILRON = .000 ELEVON = .000
GRID = 17.000 PO = 420.000

RUN NO. 759/ 0 GRADIENT INTERVAL = -5.00/ 5.00

DLT-X	DLT-Z	CN	CA	CLM	CY	CYN	CBL	XCP/L	YCP/L	CPB
.460	500.600	-.25453	.12300	-.01088	-.03713	-.01024	.00034	.52909	.36562	.00000
.584	601.560	-.22399	.10499	-.03207	-.03798	-.00884	.00033	.45833	.39565	.00000
.621	750.380	-.21838	.10586	-.03578	-.03869	-.00872	.00037	.44386	.40093	.00000
.449	800.260	-.21874	.10571	-.03570	-.03916	-.00872	.00038	.44431	.40287	.00000
	GRADIENT	.00000	.00000	.00000	.00000	.00000	.00000	.00000	.00000	.00000

AEDC VA422(IA17) ORB AND ET SEPARATING(ET DATA) (ATR134) (24 JUL 75)

REFERENCE DATA

SREF = 2690.0000 SQ.FT. XMRP = 1360.1000 IN. XT
LREF = 1290.3000 IN. YMRP = .0000 IN. YT
BREF = 1290.3000 IN. ZMRP = 416.4000 IN. ZT
SCALE = .0100

PARAMETRIC DATA

DLT-Y = .000 ALPHA = .000
BETA = 3.000 DLTALF = -15.000
DLTBTA = .000 MACH = 7.980
AILRON = .000 ELEVON = .000
GRID = 17.000 PO = 420.000

RUN NO. 760/ 0 GRADIENT INTERVAL = -5.00/ 5.00

DLT-X	DLT-Z	CN	CA	CLM	CY	CYN	CBL	XCP/L	YCP/L	CPB
200.420	500.270	-.27121	.12520	-.00415	-.03894	-.00954	.00054	.54764	.38724	.00000
200.480	596.880	-.23540	.11305	-.02400	-.03952	-.00941	.00033	.48711	.39196	.00000
200.590	750.300	-.21822	.10581	-.03569	-.04041	-.00898	.00038	.44407	.40308	.00000
200.490	800.300	-.21837	.10548	-.03561	-.04081	-.00914	.00039	.44441	.40180	.00000
	GRADIENT	.00000	.00000	.00000	.00000	.00000	.00000	.00000	.00000	.00000

RUN NO. 761/ 0 GRADIENT INTERVAL = -5.00/ 5.00

DLT-X	DLT-Z	CN	CA	CLM	CY	CYN	CBL	XCP/L	YCP/L	CPB
400.330	501.230	-.27044	.12547	-.00644	-.04006	-.00840	.00056	.54170	.41178	.00000
400.350	600.130	-.24297	.11846	-.01954	-.03832	-.00964	.00042	.50217	.38255	.00000
400.400	750.410	-.21868	.10524	-.03567	-.04053	-.00917	.00039	.44437	.40031	.00000
400.430	800.240	-.21806	.10486	-.03567	-.04058	-.00901	.00037	.44406	.40317	.00000
	GRADIENT	.00000	.00000	.00000	.00000	.00000	.00000	.00000	.00000	.00000

AEDC VA422(IA17) ORB AND ET SEPARATING(ET DATA) (ATR136) (24 JUL 75)

REFERENCE DATA

SREF = 2690.0000 SQ.FT. XMRP = 1360.1000 IN. XT
LREF = 1290.3000 IN. YMRP = .0000 IN. YT
BREF = 1290.3000 IN. ZMRP = 416.4000 IN. ZT
SCALE = .0100

PARAMETRIC DATA

DLT-Y = .000 ALPHA = .000
BETA = 3.000 DLTALF = -20.000
DLTBTA = .000 MACH = 7.980
AILRON = .000 ELEVON = .000
GRID = 17.000 PO = 420.000

RUN NO. 766/ 0 GRADIENT INTERVAL = -5.00/ 5.00

DLT-X	DLT-Z	CN	CA	CLM	CY	CYN	CBL	XCP/L	YCP/L	CPB
.550	802.090	-.33293	.12365	-.03389	-.04553	-.00739	.00036	.48764	.44499	.00000
.557	900.320	-.33358	.12382	-.03348	-.04599	-.00739	.00036	.48822	.44613	.00000
.430	1000.300	-.33425	.12385	-.03304	-.04597	-.00727	.00032	.48929	.44784	.00000
	GRADIENT	.00000	.00000	.00000	.00000	.00000	.00000	.00000	.00000	.00000

AEDC VA422(IA17) ORB AND ET SEPARATING(ET DATA) (ATR136) (24 JUL 75)

REFERENCE DATA

SREF = 2690.0000 SQ.FT. XMRP = 1360.1000 IN. XT
LREF = 1290.3000 IN. YMRP = .0000 IN. YT
BREF = 1290.3000 IN. ZMRP = 416.4000 IN. ZT
SCALE = .0100

PARAMETRIC DATA

DLT-Y = .000 ALPHA = .000
BETA = 3.000 DLTALF = -20.000
DLTBTA = .000 MACH = 7.980
AILRON = .000 ELEVON = .000
GRID = 17.000 PO = 420.000

RUN NO. 782/ 0 GRADIENT INTERVAL = -5.00/ 5.00

DLT-X	DLT-Z	CN	CA	CLM	CY	CYN	CBL	XCP/L	YCP/L	CPB
200.370	751.220	-.34599	.12465	-.02514	-.04345	-.00777	.00027	.50757	.43346	.00000
200.430	800.390	-.33254	.12262	-.03279	-.04432	-.00730	.00027	.48946	.44330	.00000
200.510	900.400	-.33265	.12296	-.03358	-.04448	-.00714	.00032	.48782	.44619	.00000
200.490	1000.300	-.33212	.12261	-.03335	-.04432	-.00707	.00031	.48818	.44683	.00000
	GRADIENT	.00000	.00000	.00000	.00000	.00000	.00000	.00000	.00000	.00000

RUN NO. 783/ 0 GRADIENT INTERVAL = -5.00/ 5.00

DLT-X	DLT-Z	CN	CA	CLM	CY	CYN	CBL	XCP/L	YCP/L	CPB
400.370	749.250	-.35682	.13431	-.01828	-.04437	-.00802	.00026	.52253	.43201	.00000
400.410	800.390	-.34285	.12197	-.02769	-.04558	-.00809	.00033	.50191	.43434	.00000
400.420	900.350	-.33247	.12281	-.03359	-.04636	-.00760	.00034	.48775	.44389	.00000
400.370	1000.200	-.33329	.12308	-.03339	-.04565	-.00702	.00037	.48836	.45096	.00000
	GRADIENT	.00000	.00000	.00000	.00000	.00000	.00000	.00000	.00000	.00000

AEDC VA422(IA17) ORB AND ET SEPARATING(ET DATA) (ATR137) (24 JUL 75)

REFERENCE DATA

SREF = 2690.0000 SQ.FT. XMRP = 1360.1000 IN. XT
LREF = 1290.3000 IN. YMRP = .0000 IN. YT
BREF = 1290.3000 IN. ZMRP = 416.4000 IN. ZT
SCALE = .0100

PARAMETRIC DATA

DLT-Y = .000 ALPHA = 5.000
BETA = 3.000 DLTALF = .000
DLTBTA = .000 MACH = 7.980
AILRON = .000 ELEVON = .000
GRID = 25.000 PO = 420.000

RUN NO. 807/ 0 GRADIENT INTERVAL = -5.00/ 5.00

DLT-X	DLT-Z	CN	CA	CLM	CY	CYN	CBL	XCP/L	YCP/L	CPB
.558	18.380	.02181	.08553	.02630	-.03447	-.01044	.00058	-.29182	.34679	.00000
.681	97.562	.02558	.08541	.02601	-.03343	-.01137	.00058	-.15250	.32078	.00000
.674	199.170	.04275	.08343	.02384	-.03451	-.01251	.00030	.17205	.30503	.00000
.626	301.710	.05233	.08144	.01918	-.03458	-.01125	.00035	.30232	.33098	.00000
.617	402.280	.05249	.08188	.01940	-.03573	-.01161	.00036	.30013	.33121	.00000
.743	498.100	.05245	.08239	.01939	-.03565	-.01165	.00036	.29999	.33004	.00000
	GRADIENT	.00000	.00000	.00000	.00000	.00000	.00000	.00000	.00000	.00000

AEDC VA422(1A17) ORB AND ET SEPARATING(ET DATA) (ATR137) (24 JUL 75)

REFERENCE DATA

SREF = 2690.0000 SQ.FT. XMRP = 1360.1000 IN. XT
LREF = 1290.3000 IN. YMRP = .0000 IN. YT
BREF = 1290.3000 IN. ZMRP = 416.4000 IN. ZT
SCALE = .0100

PARAMETRIC DATA

DLT-Y = .000 ALPHA = 5.000
BETA = 3.000 DLTALF = .000
DLTBTA = .000 MACH = 7.980
AILRON = .000 ELEVON = .000
GRID = 25.000 PO = 420.000

RUN NO. 808/ 0 GRADIENT INTERVAL = -5.00/ 5.00

DLT-X	DLT-Z	CN	CA	CLM	CY	CYN	CBL	XCP/L	YCP/L	CPB
200.630	23.331	.01156	.08757	.01814	-.03439	-.01014	.00059	-.53795	.35241	.00000
200.580	100.900	.01881	.08629	.02656	-.03391	-.01090	.00055	-.42802	.33374	.00000
200.550	200.720	.03974	.08328	.02490	-.03275	-.01220	.00030	.12226	.29810	.00000
200.530	299.840	.05217	.08107	.01938	-.03564	-.01150	.00036	.29881	.33294	.00000
200.550	398.910	.05220	.08177	.01970	-.03512	-.01150	.00036	.29469	.32957	.00000
200.640	498.910	.05237	.08193	.01939	-.03551	-.01166	.00036	.29972	.32887	.00000
	GRADIENT	.00000	.00000	.00000	.00000	.00000	.00000	.00000	.00000	.00000

AEDC VA422(1A17) ORB AND ET SEPARATING(ET DATA) (ATR138) (24 JUL 75)

REFERENCE DATA

SREF = 2690.0000 SQ.FT. XMRP = 1360.1000 IN. XT
LREF = 1290.3000 IN. YMRP = .0000 IN. YT
BREF = 1290.3000 IN. ZMRP = 416.4000 IN. ZT
SCALE = .0100

PARAMETRIC DATA

DLT-Y = .000 ALPHA = 5.000
BETA = 3.000 DLTALF = -5.000
DLTBTA = .000 MACH = 7.980
AILRON = .000 ELEVON = .000
GRID = 25.000 PO = 420.000

RUN NO. 811/ 0 GRADIENT INTERVAL = -5.00/ 5.00

DLT-X	DLT-Z	CN	CA	CLM	CY	CYN	CBL	XCP/L	YCP/L	CPB
.595	201.410	-.07164	.10589	.03484	-.03071	-.01309	.00064	.89614	.26057	.00000
.595	300.450	-.01163	.08141	.00607	-.03286	-.01218	.00026	.92309	.29944	.00000
.590	403.200	-.00306	.08192	.00190	-.03326	-.01188	.00031	.00000	.30873	.00000
.601	501.390	-.00309	.08231	.00181	-.03346	-.01201	.00031	.00000	.30749	.00000
-.189	600.460	-.00391	.08217	.00167	-.03376	-.01195	.00032	.85697	.31108	.00000
	GRADIENT	.00000	.00000	.00000	.00000	.00000	.00000	.00000	.00000	.00000

RUN NO. 812/ 0 GRADIENT INTERVAL = -5.00/ 5.00

DLT-X	DLT-Z	CN	CA	CLM	CY	CYN	CBL	XCP/L	YCP/L	CPB
200.580	200.150	-.09225	.11668	.04610	-.02948	-.01320	.00067	.90750	.24545	.00000
200.480	298.890	-.01908	.08418	.01044	-.03272	-.01201	.00022	.94109	.30184	.00000
200.480	397.540	-.00339	.08138	.00215	-.03383	-.01199	.00031	.00000	.31080	.00000
200.540	497.680	-.00343	.08195	.00207	-.03284	-.01176	.00031	.00000	.30805	.00000
200.510	599.600	-.00350	.08201	.00170	-.03315	-.01173	.00031	.00000	.31114	.00000
	GRADIENT	.00000	.00000	.00000	.00000	.00000	.00000	.00000	.00000	.00000

ORIGINAL PAGE IS OF POOR QUALITY

DATE 25 JUL 75 TABULATED SOURCE DATA - IA17A

AEDC VA422(IA17) ORB AND ET SEPARATING(ET DATA) (ATR139) (24 JUL 75)

REFERENCE DATA

SREF = 2890.0000 SQ.FT. XMRP = 1360.1000 IN. XT
LREF = 1290.3000 IN. YMRP = .0000 IN. YT
BREF = 1290.3000 IN. ZMRP = 416.4000 IN. ZT
SCALE = .0100

PARAMETRIC DATA

DLT-Y = .000 ALPHA = 5.000
BETA = 3.000 DLTALF = -10.000
DLTBTA = .000 MACH = 7.980
AILRON = .000 ELEVON = .000
GRID = 25.000 PO = 420.000

RUN NO. 813/ 0 GRADIENT INTERVAL = -5.00/ 5.00

DLT-X	DLT-Z	CN	CA	CLM	CY	CYN	CBL	XCP/L	YCP/L	CPB
.543	402.570	-.07111	.08615	-.00809	-.03302	-.01155	.00021	.47888	.31407	.00000
.585	503.340	-.06055	.08483	-.01528	-.03280	-.01135	.00031	.38210	.31662	.00000
-.517	604.140	-.06167	.08588	-.01562	-.03317	-.01146	.00031	.38143	.31690	.00000
	GRADIENT	.00000	.00000	.00000	.00000	.00000	.00000	.00000	.00000	.00000

RUN NO. 814/ 0 GRADIENT INTERVAL = -5.00/ 5.00

DLT-X	DLT-Z	CN	CA	CLM	CY	CYN	CBL	XCP/L	YCP/L	CPB
200.610	399.290	-.07858	.08865	-.00324	-.03354	-.01144	.00017	.52950	.32004	.00000
200.560	496.180	-.05936	.08483	-.01496	-.03380	-.01179	.00032	.38226	.31466	.00000
200.570	598.300	-.06016	.08573	-.01531	-.03325	-.01138	.00031	.38054	.31911	.00000
	GRADIENT	.00000	.00000	.00000	.00000	.00000	.00000	.00000	.00000	.00000

RUN NO. 815/ 0 GRADIENT INTERVAL = -5.00/ 5.00

DLT-X	DLT-Z	CN	CA	CLM	CY	CYN	CBL	XCP/L	YCP/L	CPB
400.430	402.330	-.06993	.09878	.00331	-.03340	-.01188	.00022	.58404	.30980	.00000
400.490	500.580	-.06004	.08497	-.01518	-.03295	-.01133	.00029	.38168	.31819	.00000
400.490	599.910	-.06005	.08581	-.01539	-.03346	-.01147	.00031	.37927	.31882	.00000
	GRADIENT	.00000	.00000	.00000	.00000	.00000	.00000	.00000	.00000	.00000

AEDC VA422(IA17) ORB AND ET SEPARATING(ET DATA) (ATR140) (24 JUL 75)

REFERENCE DATA

SREF = 2690.0000 SQ.FT. XMRP = 1360.1000 IN. XT
LREF = 1290.3000 IN. YMRP = .0000 IN. YT
BREF = 1290.3000 IN. ZMRP = 416.4000 IN. ZT
SCALE = .0100

PARAMETRIC DATA

DLT-Y = .000 ALPHA = 5.000
BETA = 3.000 DLTALF = -15.000
DLTBTA = .000 MACH = 7.980
AILRON = .000 ELEVON = .000
GRID = 25.000 PO = 420.000

RUN NO. 818/ 0 GRADIENT INTERVAL = -5.00/ 5.00

DLT-X	DLT-Z	CN	CA	CLM	CY	CYN	CBL	XCP/L	YCP/L	CPB
.627	401.800	-.07013	.08550	-.00915	-.03249	-.01094	.00025	.46714	.32311	.00000
.621	497.370	-.05938	.08517	-.01505	-.03315	-.01156	.00032	.38132	.31481	.00000
.601	597.250	-.06029	.08573	-.01526	-.03303	-.01130	.00032	.38155	.31926	.00000
	GRADIENT	.00000	.00000	.00000	.00000	.00000	.00000	.00000	.00000	.00000

RUN NO. 820/ 0 GRADIENT INTERVAL = -5.00/ 5.00

DLT-X	DLT-Z	CN	CA	CLM	CY	CYN	CBL	XCP/L	YCP/L	CPB
200.440	500.390	-.16716	.10212	-.00150	-.03598	-.00966	.00020	.55206	.37075	.00000
200.590	595.830	-.12468	.09158	-.02766	-.03454	-.01002	.00028	.40337	.35562	.00000
200.530	748.850	-.12468	.09263	-.02788	-.03561	-.01007	.00032	.40213	.36089	.00000
200.510	800.010	-.12451	.09310	-.02800	-.03458	-.00982	.00032	.40121	.35991	.00000
	GRADIENT	.00000	.00000	.00000	.00000	.00000	.00000	.00000	.00000	.00000

RUN NO. 821/ 0 GRADIENT INTERVAL = -5.00/ 5.00

DLT-X	DLT-Z	CN	CA	CLM	CY	CYN	CBL	XCP/L	YCP/L	CPB
400.280	501.990	-.17584	.11451	.00318	-.03458	-.01110	.00035	.57096	.33412	.00000
400.540	600.430	-.12640	.09267	-.02717	-.03541	-.01016	.00025	.40820	.35795	.00000
400.530	750.070	-.12494	.09316	-.02808	-.03479	-.00992	.00032	.40134	.35906	.00000
400.600	800.070	-.12491	.09355	-.02811	-.03468	-.00978	.00032	.40113	.36129	.00000
	GRADIENT	.00000	.00000	.00000	.00000	.00000	.00000	.00000	.00000	.00000

AEDC VA422(IA17) ORB AND ET SEPARATING(ET DATA) (ATR142) (24 JUL 75)

REFERENCE DATA

SREF =	2690.0000 SQ.FT.	XMRP =	1360.1000 IN. XT
LREF =	1290.3000 IN.	YMRP =	.0000 IN. YT
BREF =	1290.3000 IN.	ZMRP =	416.4000 IN. ZT
SCALE =	.0100		

PARAMETRIC DATA

DLT-Y =	.000	ALPHA =	5.000
BETA =	3.000	DLTALF =	-20.000
DLTBTA =	.000	MACH =	7.980
AILRON =	.000	ELEVON =	.000
GRID =	25.000	PO =	420.000

RUN NO. 826/ 0 GRADIENT INTERVAL = -5.00/ 5.00

DLT-X	DLT-Z	CN	CA	CLM	CY	CYN	CBL	XCP/L	YCP/L	CPB
.541	801.290	-.21416	.10539	-.03513	-.04025	-.00891	.00032	.44375	.40367	.00000
.492	900.260	-.21468	.10561	-.03537	-.04002	-.00905	.00032	.44325	.40038	.00000
.513	1000.200	-.21572	.10659	-.03576	-.03957	-.00889	.00031	.44254	.40146	.00000
	GRADIENT	.00000	.00000	.00000	.00000	.00000	.00000	.00000	.00000	.00000

RUN NO. 822/ 0 GRADIENT INTERVAL = -5.00/ 5.00

DLT-X	DLT-Z	CN	CA	CLM	CY	CYN	CBL	XCP/L	YCP/L	CPB
200.490	750.400	-.21380	.10512	-.03506	-.04025	-.00900	.00032	.44376	.40218	.00000
200.460	800.240	-.21416	.10549	-.03502	-.04033	-.00909	.00032	.44410	.40094	.00000
200.470	900.190	-.21529	.10595	-.03511	-.03966	-.00906	.00032	.44439	.39870	.00000
200.500	1000.200	-.21550	.10573	-.03553	-.03931	-.00879	.00031	.44317	.40213	.00000
	GRADIENT	.00000	.00000	.00000	.00000	.00000	.00000	.00000	.00000	.00000

RUN NO. 823/ 0 GRADIENT INTERVAL = -5.00/ 5.00

DLT-X	DLT-Z	CN	CA	CLM	CY	CYN	CBL	XCP/L	YCP/L	CPB
400.560	750.020	-.21321	.10504	-.03518	-.03864	-.00861	.00029	.44306	.40261	.00000
400.550	800.230	-.21382	.10522	-.03514	-.03846	-.00868	.00031	.44352	.40060	.00000
400.600	900.190	-.21380	.10545	-.03513	-.03960	-.00871	.00032	.44356	.40470	.00000
400.640	1000.300	-.21421	.10579	-.03550	-.03954	-.00866	.00031	.44257	.40531	.00000
	GRADIENT	.00000	.00000	.00000	.00000	.00000	.00000	.00000	.00000	.00000

AEDC VA422(IA17) ORB AND ET SEPARATING(ET DATA) (ATR143) (24 JUL 75)

REFERENCE DATA

SREF = 2690.0000 SQ.FT. XMRP = 1360.1000 IN. XT
LREF = 1290.3000 IN. YMRP = .0000 IN. YT
BREF = 1290.3000 IN. ZMRP = 416.4000 IN. ZT
SCALE = .0100

PARAMETRIC DATA

DLT-Y = .000 ALPHA = -5.000
BETA = 3.000 DLTALF = .000
DLTBTA = .000 MACH = 7.980
AILRON = .000 ELEVON = .000
GRID = 18.000 PO = 420.000

RUN NO. 838/ 0 GRADIENT INTERVAL = -5.00/ 5.00

DLT-X	DLT-Z	CN	CA	CLM	CY	CYN	CBL	XCP/L	YCP/L	CPB
.588	18.871	-.09301	.08785	-.01468	-.03800	-.00997	.00058	.44806	.37510	.00000
.498	102.280	-.08915	.08853	-.00950	-.03566	-.01006	.00036	.48387	.36134	.00000
.668	202.400	-.07637	.09098	-.00875	-.03385	-.01133	.00032	.47825	.32462	.00000
.459	300.820	-.06625	.08659	-.01484	-.03365	-.01172	.00028	.40185	.31495	.00000
.625	400.150	-.06431	.08619	-.01638	-.03389	-.01172	.00032	.38042	.31678	.00000
.616	500.200	-.06431	.08609	-.01663	-.03405	-.01174	.00034	.37770	.31737	.00000
	GRADIENT	.00000	.00000	.00000	.00000	.00000	.00000	.00000	.00000	.00000

RUN NO. 839/ 0 GRADIENT INTERVAL = -5.00/ 5.00

DLT-X	DLT-Z	CN	CA	CLM	CY	CYN	CBL	XCP/L	YCP/L	CPB
200.560	23.932	-.10400	.08999	-.02105	-.03853	-.00949	.00064	.41695	.38617	.00000
200.490	97.148	-.08768	.08950	-.01005	-.03762	-.01019	.00033	.47824	.36916	.00000
200.460	197.760	-.07614	.08941	-.01000	-.03465	-.01095	.00036	.46658	.33750	.00000
200.470	297.960	-.07213	.09099	-.01027	-.03480	-.01177	.00028	.45892	.32203	.00000
200.430	399.840	-.06501	.08543	-.01629	-.03472	-.01197	.00033	.38326	.31743	.00000
200.520	500.150	-.06508	.08583	-.01649	-.03435	-.01195	.00033	.38131	.31536	.00000
	GRADIENT	.00000	.00000	.00000	.00000	.00000	.00000	.00000	.00000	.00000

ORIGINAL PAGE IS OF POOR QUALITY

AEDC VA422(IA17) ORB AND ET SEPARATING(ET DATA) (ATR144) (24 JUL 75)

REFERENCE DATA

SREF = 2690.0000 SQ.FT. XMRP = 1360.1000 IN. XT
LREF = 1290.3000 IN. YMRP = .0000 IN. YT
BREF = 1290.3000 IN. ZMRP = 416.4000 IN. ZT
SCALE = .0100

PARAMETRIC DATA

DLT-Y = .000 ALPHA = -5.000
BETA = 3.000 DLTALF = -5.000
DLTBTA = .000 MACH = 7.980
AILRON = .000 ELEVON = .000
GRID = 18.000 PO = 420.000

RUN NO. 842/ 0 GRADIENT INTERVAL = -5.00/ 5.00

DLT-X	DLT-Z	CN	CA	CLM	CY	CYN	CBL	XCP/L	YCP/L	CPB
.606	200.090	-.21878	.13330	.01941	-.03234	-.01169	.00095	.62031	.30581	.00000
.517	302.350	-.14998	.10115	-.01761	-.03536	-.01018	.00042	.47630	.35725	.00000
.453	400.460	-.13698	.09648	-.02493	-.03589	-.01009	.00024	.43119	.36190	.00000
.549	500.220	-.13126	.09324	-.02916	-.03586	-.01017	.00033	.40316	.36027	.00000
.203	598.200	-.12972	.09341	-.02893	-.03693	-.01038	.00033	.40252	.36194	.00000
	GRADIENT	.00000	.00000	.00000	.00000	.00000	.00000	.00000	.00000	.00000

RUN NO. 843/ 0 GRADIENT INTERVAL = -5.00/ 5.00

DLT-X	DLT-Z	CN	CA	CLM	CY	CYN	CBL	XCP/L	YCP/L	CPB
200.540	196.120	-.17715	.10560	-.00740	-.03926	-.00868	.00026	.52916	.40388	.00000
200.480	296.240	-.14798	.09592	-.02029	-.03735	-.00917	.00042	.46257	.38674	.00000
200.470	398.250	-.14744	.10390	-.01777	-.03578	-.01069	.00040	.47415	.34964	.00000
200.550	500.160	-.13225	.09272	-.02876	-.03576	-.01023	.00029	.40643	.35850	.00000
200.480	600.130	-.13213	.09335	-.02910	-.03650	-.01036	.00033	.40448	.36010	.00000
	GRADIENT	.00000	.00000	.00000	.00000	.00000	.00000	.00000	.00000	.00000

AEDC VA422(IA17) ORB AND ET SEPARATING(ET DATA) (ATR145) (24 JUL 75)

REFERENCE DATA

SREF = 2690.0000 SQ.FT. XMRP = 1360.1000 IN. XT
LREF = 1290.3000 IN. YMRP = .0000 IN. YT
BREF = 1290.3000 IN. ZMRP = 416.4000 IN. ZT
SCALE = .0100

PARAMETRIC DATA

DLT-Y = .000 ALPHA = -5.000
BETA = 3.000 DLTALF = -10.000
DLTBTA = .000 MACH = 7.980
AILRON = .000 ELEVON = .000
GRID = 18.000 PO = 420.000

RUN NO. 844/ 0 GRADIENT INTERVAL = -5.00/ 5.00

DLT-X	DLT-Z	CN	CA	CLM	CY	CYN	CBL	XCP/L	YCP/L	CPB
.490	404.050	-.25538	.11919	-.01510	-.03903	-.00879	.00049	.51704	.40106	.00000
.476	500.510	-.23548	.11361	-.02516	-.03918	-.00943	.00029	.48370	.39025	.00000
.487	601.450	-.21936	.10537	-.03546	-.03986	-.00888	.00029	.44541	.40277	.00000
	GRADIENT	.00000	.00000	.00000	.00000	.00000	.00000	.00000	.00000	.00000

AEDC VA422(IA17) ORB AND ET SEPARATING(ET DATA) (ATR145) (24 JUL 75)

REFERENCE DATA

SREF = 2690.0000 SQ.FT. XMRP = 1360.1000 IN. XT
LREF = 1290.3000 IN. YMRP = .0000 IN. YT
BREF = 1290.3000 IN. ZMRP = 416.4000 IN. ZT
SCALE = .0100

PARAMETRIC DATA

DLT-Y = .000 ALPHA = -5.000
BETA = 3.000 DLTALF = -10.000
DLTBTA = .000 MACH = 7.980
AILRON = .000 ELEVON = .000
GRID = 18.000 PO = 420.000

RUN NO. 845/ 0 GRADIENT INTERVAL = -5.00/ 5.00

DLT-X	DLT-Z	CN	CA	CLM	CY	CYN	CBL	XCP/L	YCP/L	CPB
200.560	397.920	-.24508	.11009	-.02403	-.04280	-.00752	.00046	.48985	.43564	.00000
200.430	498.610	-.24753	.12013	-.01788	-.03926	-.01045	.00052	.50788	.37232	.00000
200.560	600.240	-.22636	.10428	-.03221	-.03939	-.00933	.00028	.45892	.39283	.00000
	GRADIENT	.00000	.00000	.00000	.00000	.00000	.00000	.00000	.00000	.00000

RUN NO. 846/ 0 GRADIENT INTERVAL = -5.00/ 5.00

DLT-X	DLT-Z	CN	CA	CLM	CY	CYN	CBL	XCP/L	YCP/L	CPB
400.520	401.190	-.23574	.10417	-.03227	-.04151	-.00715	.00051	.46272	.43805	.00000
400.450	500.420	-.24769	.11481	-.02019	-.03972	-.00870	.00042	.50139	.40527	.00000
400.510	599.990	-.23572	.11276	-.02526	-.03939	-.00947	.00035	.48348	.39292	.00000
	GRADIENT	.00000	.00000	.00000	.00000	.00000	.00000	.00000	.00000	.00000

AEDC VA422(IA17) ORB AND ET SEPARATING(ET DATA) (ATR146) (24 JUL 75)

REFERENCE DATA

SREF = 2690.0000 SQ.FT. XMRP = 1360.1000 IN. XT
LREF = 1290.3000 IN. YMRP = .0000 IN. YT
BREF = 1290.3000 IN. ZMRP = 416.4000 IN. ZT
SCALE = .0100

PARAMETRIC DATA

DLT-Y = .000 ALPHA = -5.000
BETA = 3.000 DLTALF = -15.000
DLTBTA = .000 MACH = 7.980
AILRON = .000 ELEVON = .000
GRID = 18.000 PO = 420.000

RUN NO. 850/ 0 GRADIENT INTERVAL = -5.00/ 5.00

DLT-X	DLT-Z	CN	CA	CLM	CY	CYN	CBL	XCP/L	YCP/L	CPB
.366	500.170	-.37760	.13329	-.01334	-.04562	-.00746	.00093	.53367	.44407	.00000
.503	600.950	-.40684	.16417	.00648	-.04178	-.00894	.00095	.56948	.40890	.00000
.417	750.440	-.33504	.12338	-.03277	-.04603	-.00728	.00025	.49001	.44778	.00000
1.270	805.100	-.33494	.12353	-.03250	-.04577	-.00703	.00030	.49055	.45097	.00000
	GRADIENT	.00000	.00000	.00000	.00000	.00000	.00000	.00000	.00000	.00000

AEDC VA422(IA17) ORB AND ET SEPARATING(ET DATA) (ATR148) (24 JUL 75)

REFERENCE DATA

SREF = 2690.0000 SQ.FT. XMRP = 1380.1000 IN. XT
LREF = 1290.3000 IN. YMRP = .0000 IN. YT
BREF = 1290.3000 IN. ZMRP = 416.4000 IN. ZT
SCALE = .0100

PARAMETRIC DATA

DLT-Y = .000 ALPHA = -5.000
BETA = 3.000 DLTALF = -15.000
DLTBTA = .000 MACH = 7.980
AILRON = .000 ELEVON = .000
GRID = 18.000 PO = 420.000

RUN NO. 851/ 0 GRADIENT INTERVAL = -5.00/ 5.00

DLT-X	DLT-Z	CN	CA	CLM	CY	CYN	CBL	XCP/L	YCP/L	CPB
200.420	500.390	-.36686	.13042	-.02020	-.04995	-.00520	.00044	.51986	.48565	.00000
200.190	599.870	-.42164	.16633	.01631	-.04110	-.01031	.00109	.58537	.38306	.00000
200.570	746.740	-.34224	.12141	-.02961	-.04379	-.00707	.00022	.49789	.44550	.00000
200.480	800.230	-.33536	.12265	-.03273	-.04582	-.00739	.00032	.49016	.44559	.00000
	GRADIENT	.00000	.00000	.00000	.00000	.00000	.00000	.00000	.00000	.00000

RUN NO. 852/ 0 GRADIENT INTERVAL = -5.00/ 5.00

DLT-X	DLT-Z	CN	CA	CLM	CY	CYN	CBL	XCP/L	YCP/L	CPB
400.510	501.190	-.34530	.11714	-.03617	-.04858	-.00497	.00064	.48517	.48687	.00000
400.410	600.610	-.36917	.13378	-.01612	-.04620	-.00668	.00035	.52784	.45732	.00000
400.390	750.250	-.35195	.12767	-.02326	-.04375	-.00791	.00022	.51217	.43205	.00000
400.430	800.380	-.34086	.12201	-.03005	-.04495	-.00754	.00024	.49674	.44118	.00000
	GRADIENT	.00000	.00000	.00000	.00000	.00000	.00000	.00000	.00000	.00000

AEDC VA422(IA17) ORB AND ET SEPARATING(ET DATA) (ATR148) (24 JUL 75)

REFERENCE DATA

SREF = 2690.0000 SQ.FT. XMRP = 1360.1000 IN. XT
LREF = 1290.3000 IN. YMRP = .0000 IN. YT
BREF = 1290.3000 IN. ZMRP = 416.4000 IN. ZT
SCALE = .0100

PARAMETRIC DATA

DLT-Y = .000 ALPHA = -5.000
BETA = 3.000 DLTALF = -20.000
DLTBTA = .000 MACH = 7.980
AILRON = .000 ELEVON = .000
GRID = 18.000 PO = 370.000

RUN NO. 857/ 0 GRADIENT INTERVAL = -5.00/ 5.00

DLT-X	DLT-Z	CN	CA	CLM	CY	CYN	CBL	XCP/L	YCP/L	CPB
.432	804.050	-.50262	.13957	-.01183	-.04876	-.00630	.00018	.54190	.46805	.00000
.507	901.120	-.47467	.14556	-.02729	-.05189	-.00559	.00043	.51818	.48311	.00000
.479	1000.300	-.47335	.14456	-.02719	-.05063	-.00569	.00040	.51821	.47987	.00000
	GRADIENT	.00000	.00000	.00000	.00000	.00000	.00000	.00000	.00000	.00000

AEDC VA422(IA17) ORB AND ET SEPARATING(ET DATA) (ATR148) (24 JUL 75)

REFERENCE DATA

SREF = 2690.0000 SQ.FT. XMRP = 1360.1000 IN. XT
LREF = 1290.3000 IN. YMRP = .0000 IN. YT
BREF = 1290.3000 IN. ZMRP = 416.4000 IN. ZT
SCALE = .0100

PARAMETRIC DATA

DLT-Y = .000 ALPHA = -5.000
BETA = 3.000 DLTALF = -20.000
DLTBTA = .000 MACH = 7.980
AILRON = .000 ELEVON = .000
GRID = 18.000 PO = 370.000

RUN NO. 853/ 0 GRADIENT INTERVAL = -5.00/ 5.00

DLT-X	DLT-Z	CN	CA	CLM	CY	CYN	CBL	XCP/L	YCP/L	CPB
200.430	753.160	-.56394	.17844	.02160	-.04876	-.00728	.00166	.58510	.44728	.00000
200.400	802.920	-.53118	.16449	.00584	-.04995	-.00698	.00039	.56602	.46065	.00000
200.470	900.460	-.47457	.14654	-.02542	-.05001	-.00536	.00030	.52092	.48347	.00000
200.420	1000.300	-.47356	.14829	-.02578	-.05122	-.00565	.00035	.52031	.48133	.00000
	GRADIENT	.00000	.00000	.00000	.00000	.00000	.00000	.00000	.00000	.00000

RUN NO. 854/ 0 GRADIENT INTERVAL = -5.00/ 5.00

DLT-X	DLT-Z	CN	CA	CLM	CY	CYN	CBL	XCP/L	YCP/L	CPB
400.440	747.170	-.55528	.17416	.01535	-.04898	-.00570	.00174	.57766	.47699	.00000
400.320	800.390	-.58104	.19981	.03739	-.04403	-.00810	.00186	.60330	.42978	.00000
400.530	898.160	-.49252	.14624	-.01709	-.04926	-.00560	.00025	.53410	.47897	.00000
400.380	1000.300	-.47530	.14542	-.02614	-.05141	-.00577	.00034	.51992	.47987	.00000
	GRADIENT	.00000	.00000	.00000	.00000	.00000	.00000	.00000	.00000	.00000

AEDC VA422(IA17) ORB AND ET SEPARATING(ET DATA) (ATR149) (24 JUL 75)

REFERENCE DATA

SREF = 2690.0000 SQ.FT. XMRP = 1360.1000 IN. XT
LREF = 1290.3000 IN. YMRP = .0000 IN. YT
BREF = 1290.3000 IN. ZMRP = 416.4000 IN. ZT
SCALE = .0100

PARAMETRIC DATA

DLT-Y = .000 ALPHA = .000
BETA = .000 DLTALF = .000
DLTBTA = .000 MACH = 7.980
AILRON = 15.000 ELEVON = .000
GRID = 21.000 PO = 300.000

RUN NO. 887/ 0 GRADIENT INTERVAL = -5.00/ 5.00

DLT-X	DLT-Z	CN	CA	CLM	CY	CYN	CBL	XCP/L	YCP/L	CPB
.574	18.882	-.03411	.08531	.00583	.00051	-.00056	.00023	.67772	.00000	.00000
.436	99.691	-.02877	.08494	.00684	-.00073	-.00065	.00012	.72451	.00000	.00000
.536	201.100	-.01068	.08029	.00378	-.00174	-.00060	.00011	.80579	.00000	.00000
.486	301.560	-.00465	.07947	.00070	-.00094	-.00026	.00008	.66345	.00000	.00000
.527	400.370	.00528	.08002	.00069	-.00278	-.00075	.00010	.64961	.00000	.00000
.553	497.480	-.00499	.08171	.00078	-.00242	-.00082	.00010	.66694	.00000	.00000
	GRADIENT	.00000	.00000	.00000	.00000	.00000	.00000	.00000	.00000	.00000

AEDC VA422(IA17) ORB AND ET SEPARATING(ET DATA) (ATR150) (24 JUL 75)

REFERENCE DATA

SREF = 2690.0000 SQ.FT. XMRP = 1380.1000 IN. XT
LREF = 1290.3000 IN. YMRP = .0000 IN. YT
BREF = 1290.3000 IN. ZMRP = 416.4000 IN. ZT
SCALE = .0100

PARAMETRIC DATA

DLT-Y = .000 ALPHA = .000
BETA = .000 DLTALF = -10.000
DLTBTA = .000 MACH = 7.980
AILRON = 15.000 ELEVON = .000
GRID = 21.000 PO = 300.000

RUN NO. 888/ 0 GRADIENT INTERVAL = -5.00/ 5.00

DLT-X	DLT-Z	CN	CA	CLM	CY	CYN	CBL	XCP/L	YCP/L	CPB
.578	403.040	-.14629	.10009	-.01695	.00167	-.00068	.00029	.47737	.00000	.00000
.680	500.960	-.12627	.08934	-.02976	.00030	-.00004	.00011	.39367	.00000	.00000
.577	600.170	-.12653	.08916	-.02990	.00071	.00018	.00011	.39326	.00000	.00000
.587	750.100	-.12804	.08899	-.03042	.00028	.00013	.00011	.39234	.00000	.00000
-.364	801.740	-.12805	.08935	-.03051	.00056	.00007	.00012	.39189	.00000	.00000
	GRADIENT	.00000	.00000	.00000	.00000	.00000	.00000	.00000	.00000	.00000

AEDC VA422(IA17) ORB AND ET SEPARATING(ET DATA) (ATR151) (24 JUL 75)

REFERENCE DATA

SREF = 2690.0000 SQ.FT. XMRP = 1360.1000 IN. XT
LREF = 1290.3000 IN. YMRP = .0000 IN. YT
BREF = 1290.3000 IN. ZMRP = 416.4000 IN. ZT
SCALE = .0100

PARAMETRIC DATA

DLT-Y = .000 ALPHA = .000
BETA = .000 DLTALF = -20.000
DLTBTA = .000 MACH = 7.980
AILRON = 15.000 ELEVON = .000
GRID = 21.000 PO = 300.000

RUN NO. 889/ 0 GRADIENT INTERVAL = -5.00/ 5.00

DLT-X	DLT-Z	CN	CA	CLM	CY	CYN	CBL	XCP/L	YCP/L	CPB
.413	801.880	-.32808	.12062	-.03579	.00538	-.00026	.00040	.48212	.00000	.00000
.445	900.380	-.32891	.12067	-.03553	.00553	-.00024	.00040	.48288	.00000	.00000
.432	1000.200	-.32863	.12085	-.03485	.00473	-.00059	.00041	.48425	.00000	.00000
	GRADIENT	.00000	.00000	.00000	.00000	.00000	.00000	.00000	.00000	.00000

AEDC VA422(IA17) ORB AND ET SEPARATING(ET DATA) (ATR152) (24 JUL 75)

REFERENCE DATA

SREF = 2690.0000 SQ.FT. XMRP = 1360.1000 IN. XT
LREF = 1290.3000 IN. YMRP = .0000 IN. YT
BREF = 1290.3000 IN. ZMRP = 416.4000 IN. ZT
SCALE = .0100

PARAMETRIC DATA

DLT-Y = .000 ALPHA = -5.000
BETA = .000 DLTALF = .000
DLTBTA = .000 MACH = 7.980
AILRON = 15.000 ELEVON = .000
GRID = 20.000 PO = 300.000

RUN NO. 891/ 0 GRADIENT INTERVAL = -5.00/ 5.00

DLT-X	DLT-Z	CN	CA	CLM	CY	CYN	CBL	XCP/L	YCP/L	CPB
.437	19.503	-.09375	.08566	-.01431	.00221	.00046	.00035	.45169	.00000	.00000
.516	101.550	-.08630	.08746	-.01026	.00011	-.00070	.00013	.47530	.00000	.00000
.474	201.900	-.07544	.08755	-.01025	-.00022	-.00010	.00007	.46345	.00000	.00000
.534	300.550	-.06495	.08400	-.01590	-.00097	-.00073	.00007	.38730	.00000	.00000
.519	400.150	-.06463	.08354	-.01714	-.00017	-.00046	.00006	.37300	.00000	.00000
.538	496.730	-.06437	.08393	-.01719	-.00099	-.00045	.00006	.371[illegible]	.00000	.00000
	GRADIENT	.00000	.00000	.00000	.00000	.00000	.00000	.00000	.00000	.00000

ORIGINAL PAGE IS OF POOR QUALITY

AEDC VA422(IA17) ORB AND ET SEPARATING(ET DATA) (ATR153) (24 JUL 75)

REFERENCE DATA

SREF = 2690.0000 SQ.FT. XMRP = 1360.1000 IN. XT
LREF = 1290.3000 IN. YMRP = .0000 IN. YT
BREF = 1290.3000 IN. ZMRP = 416.4000 IN. ZT
SCALE = .0100

PARAMETRIC DATA

DLT-Y = .000 ALPHA = -5.000
BETA = .000 DLTALF = -10.000
DLTBTA = .000 MACH = 7.980
AILRON = 15.000 ELEVON = .000
GRID = 20.000 PO = 300.000

RUN NO. 892/ 0 GRADIENT INTERVAL = -5.00/ 5.00

DLT-X	DLT-Z	CN	CA	CLM	CY	CYN	CBL	XCP/L	YCP/L	CPB
.398	403.020	-.25278	[illegible]	-.01614	.00195	-.00073	.00035	.51374	.00000	.00000
.411	500.440	-.23160	[illegible]	-.02804	.00287	-.00035	.00031	.47376	.00000	.00000
-.098	601.360	-.21578	.10079	-.03788	.00195	.00015	.00024	.43570	.00000	.00000
	GRADIENT	.00000	.00000	.00000	.00000	.00000	.00000	.00000	.00000	.00000

AEDC VA422(IA17) ORB AND ET SEPARATING(ET DATA) (ATR154) (24 JUL 75)

REFERENCE DATA

SREF = 2690.0000 SQ.FT. XMRP = 1360.1000 IN. XT
LREF = 1290.3000 IN. YMRP = .0000 IN. YT
BREF = 1290.3000 IN. ZMRP = 416.4000 IN. ZT
SCALE = .0100

PARAMETRIC DATA

DLT-Y = .000 ALPHA = -5.000
BETA = .000 DLTALF = -20.000
DLTBTA = .000 MACH = 7.980
AILRON = 15.000 ELEVON = .000
GRID = 20.000 PO = 300.000

RUN NO. 893/ 0 GRADIENT INTERVAL = -5.00/ 5.00

DLT-X	DLT-Z	CN	CA	CLM	CY	CYN	CBL	XCP/L	YCP/L	CPB
.371	803.700	-.50064	.14234	-.00889	.00898	-.00089	.00047	.54593	.62731	.00000
.459	900.910	-.46645	.14346	-.02887	.00997	-.00095	.00063	.51509	.62476	.00000
.423	1000.300	-.46616	.14329	-.02866	.01074	-.00091	.00063	.51539	.61781	.00000
	GRADIENT	.00000	.00000	.00000	.00000	.00000	.00000	.00000	.00000	.00000

AEDC VA422(IA17) ORB AND ET SEPARATING(ET DATA) (ATR155) (24 JUL 75)

REFERENCE DATA

SREF = 2690.0000 SQ.FT. XMRP = 1360.1000 IN. XT
LREF = 1290.3000 IN. YMRP = .0000 IN. YT
BREF = 1290.3000 IN. ZMRP = 416.4000 IN. ZT
SCALE = .0100

PARAMETRIC DATA

DLT-Y = .000 ALPHA = .000
BETA = .000 DLTALF = .000
DLTBTA = .000 MACH = 7.980
AILRON = .000 ELEVON = -20.000
GRID = 21.000 PO = 300.000

RUN NO. 903/ 0 GRADIENT INTERVAL = -5.00/ 5.00

DLT-X	DLT-Z	CN	CA	CLM	CY	CYN	CBL	XCP/L	YCP/L	CPB
.501	18.825	-.03368	.08377	.00496	.00020	-.00018	.00025	.66130	.00000	.00000
.512	99.677	-.02898	.08425	.00683	-.00072	-.00074	.00014	.72294	.00000	.00000
.468	201.070	-.01135	.08019	.00417	-.00182	-.00064	.00012	.81505	.00000	.00000
.440	301.680	-.00580	.07854	.00077	-.00254	-.00063	.00009	.65126	.00000	.00000
.520	400.360	-.00582	.07930	.00074	-.00266	-.00081	.00009	.64719	.00000	.00000
.637	497.310	-.00617	.07979	.00088	-.00211	-.00070	.00008	.65776	.00000	.00000
	GRADIENT	.00000	.00000	.00000	.00000	.00000	.00000	.00000	.00000	.00000

AEDC VA422(1A17) ORB AND ET SEPARATING(ET DATA) (ATR156) (24 JUL 75)

REFERENCE DATA

SREF = 2690.0000 SQ.FT. XMRP = 1380.1000 IN. XT
LREF = 1290.3000 IN. YMRP = .0000 IN. YT
BREF = 1290.3000 IN. ZMRP = 416.4000 IN. ZT
SCALE = .0100

PARAMETRIC DATA

DLT-Y = .000 ALPHA = .000
BETA = .000 DLTALF = -10.000
DLTBTA = .000 MACH = 7.980
AILRON = .000 ELEVON = -20.000
GRID = 21.000 PO = 300.000

RUN NO. 904/ 0 GRADIENT INTERVAL = -5.00/ 5.00

DLT-X	DLT-Z	CN	CA	CLM	CY	CYN	CBL	XCP/L	YCP/L	CPB
.508	403.050	-.14809	.09885	-.01634	.00116	-.00090	.00030	.48124	.00000	.00000
.589	500.890	-.12706	.08766	-.02966	.00009	-.00015	.00012	.39527	.00000	.00000
.512	600.140	-.12707	.08896	-.02986	.00027	.00004	.00010	.39417	.00000	.00000
.455	749.990	-.12850	.08888	-.03040	-.00041	-.00026	.00013	.39308	.00000	.00000
-.251	801.550	-.12877	.08854	-.03045	-.00030	-.00001	.00012	.39314	.00000	.00000
	GRADIENT	.00000	.00000	.00000	.00000	.00000	.00000	.00000	.00000	.00000

AEDC VA422(1A17) ORB AND ET SEPARATING(ET DATA) (ATR157) (24 JUL 75)

REFERENCE DATA

SREF = 2690.0000 SQ.FT. XMRP = 1360.1000 IN. XT
LREF = 1290.3000 IN. YMRP = .0000 IN. YT
BREF = 1290.3000 IN. ZMRP = 416.4000 IN. ZT
SCALE = .0100

PARAMETRIC DATA

DLT-Y = .000 ALPHA = .000
BETA = .000 DLTALF = -20.000
DLTBTA = .000 MACH = 7.980
AILRON = .000 ELEVON = -20.000
GRID = 21.000 PO = 300.000

RUN NO. 905/ 0 GRADIENT INTERVAL = -5.00/ 5.00

DLT-X	DLT-Z	CN	CA	CLM	CY	CYN	CBL	XCP/L	YCP/L	CPB
.392	801.690	-.32884	.12063	-.03581	.00453	-.00048	.00041	.48226	.00000	.00000
.441	900.370	-.32884	.11979	-.03553	.00539	-.00046	.00040	.48285	.00000	.00000
.450	1000.300	-.32993	.12054	-.03480	.00394	-.00068	.00039	.48466	.00000	.00000
	GRADIENT	.00000	.00000	.00000	.00000	.00000	.00000	.00000	.00000	.00000

AEDC VA422(IA17) ORB AND ET SEPARATING(ET DATA) (ATR158) (24 JUL 75)

REFERENCE DATA

SREF = 2690.0000 SQ.FT. XMRP = 1360.1000 IN. XT
LREF = 1290.3000 IN. YMRP = .0000 IN. YT
BREF = 1290.3000 IN. ZMRP = 416.4000 IN. ZT
SCALE = .0100

PARAMETRIC DATA

DLT-Y = .000 ALPHA = -5.000
BETA = .000 DLTALF = .000
DLTBTA = .000 MACH = 7.980
AILRON = .000 ELEVON = -20.000
GRID = 20.000 PO = 300.000

RUN NO. 899/ 0 GRADIENT INTERVAL = -5.00/ 5.00

DLT-X	DLT-Z	CN	CA	CLM	CY	CYN	CBL	XCP/L	YCP/L	CPB
.431	19.458	-.09377	.08578	-.01437	.00118	.00017	.00035	.45126	.00000	.00000
.421	101.590	-.08645	.08672	-.01026	-.00071	-.00095	.00012	.47544	.00000	.00000
.587	201.820	-.07505	.08746	-.01020	-.00163	-.00040	.00006	.46335	.00000	.00000
.519	300.620	-.06454	.08252	-.01582	-.00171	-.00076	.00008	.38706	.00000	.00000
.526	400.110	-.06391	.08282	-.01712	-.00174	-.00052	.00008	.37119	.00000	.00000
.491	496.560	-.06352	.08274	-.01716	-.00023	-.00038	.00005	.36962	.00000	.00000
	GRADIENT	.00000	.00000	.00000	.00000	.00000	.00000	.00000	.00000	.00000

AEDC VA422(IA17) ORB AND ET SEPARATING(ET DATA) (ATR159) (24 JUL 75)

REFERENCE DATA

SREF = 2690.0000 SQ.FT. XMRP = 1360.1000 IN. XT
LREF = 1290.3000 IN. YMRP = .0000 IN. YT
BREF = 1290.3000 IN. ZMRP = 416.4000 IN. ZT
SCALE = .0100

PARAMETRIC DATA

DLT-Y = .000 ALPHA = -5.000
BETA = .000 DLTALF = -10.000
DLTBTA = .000 MACH = 7.980
AILRON = .000 ELEVON = -20.000
GRID = 20.000 PO = 300.000

RUN NO. 900/ 0 GRADIENT INTERVAL = -5.00/ 5.00

DLT-X	DLT-Z	CN	CA	CLM	CY	CYN	CBL	XCP/L	YCP/L	CPB
.407	403.030	-.25326	.11758	-.01613	.00326	-.00083	.00038	.51385	.00000	.00000
.342	500.420	-.23230	.10923	-.02783	.00163	-.00062	.00033	.47464	.00000	.00000
-.084	601.010	-.21606	.10041	-.03774	.00052	-.00026	.00025	.43629	.00000	.00000
	GRADIENT	.00000	.00000	.00000	.00000	.00000	.00000	.00000	.00000	.00000

AEDC VA422(IA17) ORB AND ET SEPARATING(ET DATA) (ATR160) (24 JUL 75)

REFERENCE DATA

SREF = 2690.0000 SQ.FT. XMRP = 1360.1000 IN. XT
LREF = 1290.3000 IN. YMRP = .0000 IN. YT
BREF = 1290.3000 IN. ZMRP = 416.4000 IN. ZT
SCALE = .0100

PARAMETRIC DATA

DLT-Y = .000 ALPHA = -5.000
BETA = .000 DLTALF = -20.000
DLTBTA = .000 MACH = 7.980
AILRON = .000 ELEVON = -20.000
GRID = 20.000 PO = 300.000

RUN NO. 901/ 0 GRADIENT INTERVAL = -5.00/ 5.00

DLT-X	DLT-Z	CN	CA	CLM	CY	CYN	CBL	XCP/L	YCP/L	CPB
.338	804.020	-.50518	.14469	-.00689	.00725	-.00100	.00048	.54881	.00000	.00000
.438	900.700	-.46664	.14339	-.02891	.00845	-.00100	.00062	.51505	.64093	.00000
.447	1000.400	-.46607	.14394	-.02860	.00827	-.00125	.00062	.51547	.66357	.00000
	GRADIENT	.00000	.00000	.00000	.00000	.00000	.00000	.00000	.00000	.00000

AEDC VA422(IA17) ORB AND ET SEPARATING(ET DATA) (ATR161) (24 JUL 75)

REFERENCE DATA

SREF = 2690.0000 SQ.FT. XMRP = 1360.1000 IN. XT
LREF = 1290.3000 IN. YMRP = .0000 IN. YT
BREF = 1290.3000 IN. ZMRP = 416.4000 IN. ZT
SCALE = .0100

PARAMETRIC DATA

DLT-Y = .000 ALPHA = .000
BETA = .000 DLTALF = .000
DLTBTA = .000 MACH = 7.980
AILRON = .000 ELEVON = -40.000
GRID = 21.000 PO = 300.000

RUN NO. 914/ 0 GRADIENT INTERVAL = -5.00/ 5.00

DLT-X	DLT-Z	CN	CA	CLM	CY	CYN	CBL	XCP/L	YCP/L	CPB
.574	18.977	-.03184	.08307	.00441	-.00081	-.00064	.00027	.65502	.00000	.00000
.448	99.634	-.02839	.08322	.00652	-.00011	-.00098	.00012	.71864	.00000	.00000
.579	200.970	-.01151	.08026	.00477	-.00255	-.00094	.00012	.84805	.00000	.00000
.546	301.680	-.00533	.07756	.00101	-.00368	-.00101	.00011	.69044	.00000	.00000
.407	400.400	-.00426	.07871	.00092	-.00229	-.00061	.00009	.00000	.00000	.00000
.542	496.850	-.00493	.07929	.00100	-.00274	-.00106	.00010	.70027	.00000	.00000
	GRADIENT	.00000	.00000	.00000	.00000	.00000	.00000	.00000	.00000	.00000

ORIGINAL PAGE IS OF POOR QUALITY

AEDC VA422(1A17) ORB AND ET SEPARATING(ET DATA) (ATR162) (24 JUL 75)

REFERENCE DATA

SREF = 2690.0000 SQ.FT. XMRP = 1360.1000 IN. XT
LREF = 1290.3000 IN. YMRP = .0000 IN. YT
BREF = 1290.3000 IN. ZMRP = 416.4000 IN. ZT
SCALE = .0100

PARAMETRIC DATA

DLT-Y = .000 ALPHA = .000
BETA = .000 DLTALF = -10.000
DLTBTA = .000 MACH = 7.980
AILRON = .000 ELEVON = -40.000
GRID = 21.000 PO = 300.000

RUN NO. 915/ 0 GRADIENT INTERVAL = -5.00/ 5.00

DLT-X	DLT-Z	CN	CA	CLM	CY	CYN	CBL	XCP/L	YCP/L	CPB
.537	403.060	-.14795	.09897	-.01653	.00179	-.00086	.00028	.48027	.00000	.00000
.457	500.820	-.12689	.08904	-.02965	.00024	.00006	.00011	.39510	.00000	.00000
.529	600.120	-.12739	.08819	-.02982	.00072	-.00009	.00011	.39481	.00000	.00000
.497	750.090	-.12848	.08840	-.03041	-.00091	-.00037	.00013	.39298	.00000	.00000
-.442	801.030	-.12836	.08848	-.03037	-.00123	-.00020	.00014	.39303	.00000	.00000
	GRADIENT	.00000	.00000	.00000	.00000	.00000	.00000	.00000	.00000	.00000

AEDC VA422(1A17) ORB AND ET SEPARATING(ET DATA) (ATR163) (24 JUL 75)

REFERENCE DATA

SREF = 2690.0000 SQ.FT. XMRP = 1360.1000 IN. XT
LREF = 1290.3000 IN. YMRP = .0000 IN. YT
BREF = 1290.3000 IN. ZMRP = 416.4000 IN. ZT
SCALE = .0100

PARAMETRIC DATA

DLT-Y = .000 ALPHA = .000
BETA = .000 DLTALF = -20.000
DLTBTA = .000 MACH = 7.980
AILRON = .000 ELEVON = -40.000
GRID = 21.000 PO = 300.000

RUN NO. 916/ 0 GRADIENT INTERVAL = -5.00/ 5.00

DLT-X	DLT-Z	CN	CA	CLM	CY	CYN	CBL	XCP/L	YCP/L	CPB
.419	801.670	-.32868	.11925	-.03575	.00389	-.00070	.00039	.48235	.00000	.00000
.427	900.390	-.32876	.11987	-.03548	.00414	-.00064	.00040	.48294	.00000	.00000
.380	1000.300	-.32927	.11983	-.03481	.00389	-.00082	.00040	.48448	.00000	.00000
	GRADIENT	.00000	.00000	.00000	.00000	.00000	.00000	.00000	.00000	.00000

AEDC VA422(IA17) ORB AND ET SEPARATING(ET DATA) (ATR164) (24 JUL 75)

REFERENCE DATA

SREF = 2690.0000 SQ.FT. XMRP = 1360.1000 IN. XT
LREF = 1290.3000 IN. YMRP = .0000 IN. YT
BREF = 1290.3000 IN. ZMRP = 416.4000 IN. ZT
SCALE = .0100

PARAMETRIC DATA

DLT-Y = .000 ALPHA = -5.000
BETA = .000 DLTALF = .000
DLTBTA = .000 MACH = 7.980
AILRON = .000 ELEVON = -40.000
GRID = 20.000 PO = 300.000

RUN NO. 918/ 0 GRADIENT INTERVAL = -5.00/ 5.00

DLT-X	DLT-Z	CN	CA	CLM	CY	CYN	CBL	XCP/L	YCP/L	CPB
.478	19.429	-.09270	.08410	-.01506	.00120	.00003	.00037	.44481	.00000	.00000
.516	101.650	-.08667	.08662	-.01058	-.00023	-.00084	.00013	.47305	.00000	.00000
.420	201.730	-.07571	.08650	-.01013	-.00231	-.00066	.00006	.46490	.00000	.00000
.563	300.640	-.06580	.08223	-.01547	-.00197	-.00096	.00007	.39408	.00000	.00000
.495	400.090	-.06500	.08119	-.01696	-.00215	-.00078	.00007	.37605	.00000	.00000
.421	500.120	-.06471	.08186	-.01732	-.00126	-.00065	.00009	.37130	.00000	.00000
	GRADIENT	.00000	.00000	.00000	.00000	.00000	.00000	.00000	.00000	.00000

AEDC VA422(IA17) ORB AND ET SEPARATING(ET DATA) (ATR165) (24 JUL 75)

REFERENCE DATA

SREF = 2690.0000 SQ.FT. XMRP = 1360.1000 IN. XT
LREF = 1290.3000 IN. YMRP = .0000 IN. YT
BREF = 1290.3000 IN. ZMRP = 416.4000 IN. ZT
SCALE = .0100

PARAMETRIC DATA

DLT-Y = .000 ALPHA = -5.000
BETA = .000 DLTALF = -10.000
DLTBTA = .000 MACH = 7.980
AILRON = .000 ELEVON = -40.000
GRID = 20.000 PO = 300.000

RUN NO. 919/ 0 GRADIENT INTERVAL = -5.00/ 5.00

DLT-X	DLT-Z	CN	CA	CLM	CY	CYN	CBL	XCP/L	YCP/L	CPB
.471	403.030	-.25459	.11802	-.01551	.00135	-.00130	.00038	.51578	.00000	.00000
.483	500.490	-.23286	.10935	-.02736	.00169	-.00082	.00034	.47627	.00000	.00000
-.149	600.400	-.21624	.09979	-.03771	.00015	-.00033	.00025	.43649	.00000	.00000
	GRADIENT	.00000	.00000	.00000	.00000	.00000	.00000	.00000	.00000	.00000

AEDC VA422(IA17) ORB AND ET SEPARATING(ET DATA) (ATR166) (24 JUL 75)

REFERENCE DATA

SREF = 2690.0000 SQ.FT. XMRP = 1360.1000 IN. XT
LREF = 1290.3000 IN. YMRP = .0000 IN. YT
BREF = 1290.3000 IN. ZMRP = 416.4000 IN. ZT
SCALE = .0100

PARAMETRIC DATA

DLT-Y = .000 ALPHA = -5.000
BETA = .000 DLTALF = -20.000
DLTBTA = .000 MACH = 7.980
AILRON = .000 ELEVON = -40.000
GRID = 20.000 PO = 300.000

RUN NO. 920/ 0 GRADIENT INTERVAL = -5.00/ 5.00

DLT-X	DLT-Z	CN	CA	CLM	CY	CYN	CBL	XCP/L	YCP/L	CPB
.352	804.080	-.50825	.14500	-.00523	.00767	-.00095	.00050	.55116	.00000	.00000
.426	900.760	-.46674	.14260	-.02897	.00905	-.00097	.00062	.51498	.63302	.00000
.448	1000.300	-.46594	.14279	-.02854	.00942	-.00113	.00064	.51554	.64225	.00000
	GRADIENT	.00000	.00000	.00000	.00000	.00000	.00000	.00000	.00000	.00000

AEDC VA422(IA17) ORB AND ET SEPARATING(ET DATA) (ATR167) (24 JUL 75)

REFERENCE DATA

SREF = 2690.0000 SQ.FT. XMRP = 1360.1000 IN. XT
LREF = 1290.3000 IN. YMRP = .0000 IN. YT
BREF = 1290.3000 IN. ZMRP = 416.4000 IN. ZT
SCALE = .0100

PARAMETRIC DATA

DLT-Y = .000 ALPHA = -10.000
BETA = 3.000 DLTALF = .000
DLTBTA = .000 MACH = 7.980
AILRON = .000 ELEVON = .000
GRID = 8.000 PO = 300.000

RUN NO. 922/ 0 GRADIENT INTERVAL = -5.00/ 5.00

DLT-X	DLT-Z	CN	CA	CLM	CY	CYN	CBL	XCP/L	YCP/L	CPB
.539	31.721	-.18340	.09081	-.03065	-.03953	-.00951	.00051	.42728	.39035	.00000
.554	102.450	-.15297	.09350	-.02490	-.04015	-.00948	.00038	.44464	.39339	.00000
.479	201.450	-.14723	.09426	-.02395	-.03986	-.01026	.00048	.44468	.37849	.00000
.486	300.190	-.14833	.10088	-.01978	-.03853	-.01137	.00047	.46518	.35223	.00000
.539	400.120	-.13412	.09139	-.02874	-.03809	-.01084	.00029	.40865	.35953	.00000
.631	500.230	-.13311	.09241	-.02914	-.03760	-.01071	.00032	.40541	.35932	.00000
	GRADIENT	.00000	.00000	.00000	.00000	.00000	.00000	.00000	.00000	.00000

RUN NO. 923/ 0 GRADIENT INTERVAL = -5.00/ 5.00

DLT-X	DLT-Z	CN	CA	CLM	CY	CYN	CBL	XCP/L	YCP/L	CPB
200.460	31.537	-.16270	.08982	-.03751	-.03966	-.01004	.00068	.39727	.38144	.00000
200.530	97.248	-.14673	.09200	-.02833	-.04119	-.00935	.00039	.42344	.39985	.00000
200.470	197.790	-.14068	.09073	-.02871	-.04192	-.01012	.00049	.41573	.38975	.00000
200.340	299.080	-.14834	.09547	-.02187	-.04054	-.01063	.00039	.45535	.37518	.00000
200.380	399.970	-.14315	.09694	-.02309	-.03934	-.01090	.00031	.44567	.36476	.00000
200.430	500.140	-.13357	.09125	-.02931	-.03872	-.01120	.00032	.40504	.35626	.00000
	GRADIENT	.00000	.00000	.00000	.00000	.00000	.00000	.00000	.00000	.00000

AEDC VA422(IA17) ORB AND ET SEPARATING(ET DATA) (ATR168) (24 JUL 75)

REFERENCE DATA

SREF = 2690.0000 SQ.FT. XMRP = 1360.1000 IN. XT
LREF = 1290.3000 IN. YMRP = .0000 IN. YT
BREF = 1290.3000 IN. ZMRP = 416.4000 IN. ZT
SCALE = .0100

PARAMETRIC DATA

DLT-Y = .000 ALPHA = -10.000
BETA = 3.000 DLTALF = -5.000
DLTBTA = .000 MACH = 7.980
AILRON = 000 ELEVON = .000
GRID = 8.000 PO = 300.000

RUN NO. 926/ 0 GRADIENT INTERVAL = -5.00/ 5.00

DLT-X	DLT-Z	CN	CA	CLM	CY	CYN	CBL	XCP/L	YCP/L	CPB
.420	203.890	-.24240	.10509	-.03079	-.04503	-.00828	.00041	.46961	.42988	.00000
.485	301.420	-.23728	.10343	-.03102	-.04482	-.00805	.00049	.46701	.43292	.00000
.464	400.250	-.24691	.11573	-.02006	-.04055	-.01056	.00058	.50158	.37641	.00000
.472	500.240	-.22802	.10322	-.03135	-.04247	-.00949	.00040	.46228	.40220	.00000
.200	598.620	-.22034	.10327	-.03561	-.04229	-.00958	.00042	.44544	.40013	.00000
	GRADIENT	.00000	.00000	.00000	.00000	.00000	.00000	.00000	.00000	.00000

RUN NO. 927/ 0 GRADIENT INTERVAL = -5.00/ 5.00

DLT-X	DLT-Z	CN	CA	CLM	CY	CYN	CBL	XCP/L	YCP/L	CPB
200.410	199.120	-.23728	.10541	-.03318	-.04509	-.00887	.00036	.46064	.42091	.00000
200.340	297.670	-.22527	.09806	-.03908	-.04489	-.00794	.00058	.43714	.43481	.00000
200.360	399.220	-.24046	.10658	-.02678	-.04439	-.00859	.00037	.48053	.42320	.00000
200.400	500.080	-.24310	.11532	-.02188	-.04057	-.01037	.00053	.49546	.37986	.00000
200.430	600.100	-.22406	.10165	-.03442	-.04343	-.00960	.00034	.45101	.40399	.00000
	GRADIENT	.00000	.00000	.00000	.00000	.00000	.00000	.00000	.00000	.00000

AEDC VA422(IA17) ORB AND ET SEPARATING(ET DATA) (ATR169) (24 JUL 75)

REFERENCE DATA

SREF = 2690.0000 SQ.FT. XMRP = 1360.1000 IN. XT
LREF = 1290.3000 IN. YMRP = .0000 IN. YT
BREF = 1290.3000 IN. ZMRP = 416.4000 IN. ZT
SCALE = .0100

PARAMETRIC DATA

DLT-Y = .000 ALPHA = -10.000
BETA = 3.000 DLTALF = -10.000
DLTBTA = .000 MACH = 7.980
AILRON = .000 ELEVON = .000
GRID = 8.000 PO = 300.000

RUN NO. 928/ 0 GRADIENT INTERVAL = -5.00/ 5.00

DLT-X	DLT-Z	CN	CA	CLM	CY	CYN	CBL	XCP/L	YCP/L	CPB
.456	400.560	-.35252	.12265	-.02978	-.05060	-.00623	.00052	.49931	.47237	.00000
.327	503.520	-.40836	.16043	.00901	-.04223	-.01045	.00091	.57376	.38547	.00000
.381	600.450	-.35403	.12796	-.02185	-.04619	-.00848	.00033	.51523	.43004	.00000
.489	700.330	-.33606	.11946	-.03323	-.04624	-.00811	.00039	.48926	.43575	.00000
.445	801.240	-.33381	.11973	-.03310	-.04633	-.00776	.00039	.48907	.44139	.00000
	GRADIENT	.00000	.00000	.00000	.00000	.00000	.00000	.00000	.00000	.00000

ORIGINAL PAGE IS OF POOR QUALITY

AEDC VA422(IA17) ORB AND ET SEPARATING(ET DATA) (ATR169) (24 JUL 75)

REFERENCE DATA

SREF = 2690.0000 SQ.FT. XMRP = 1360.1000 IN. XT
LREF = 1290.3000 IN. YMRP = .0000 IN. YT
BREF = 1290.3000 IN. ZMRP = 416.4000 IN. ZT
SCALE = .0100

PARAMETRIC DATA

DLT-Y = .000 ALPHA = -10.000
BETA = 3.000 DLTALF = -10.000
DLTBTA = .000 MACH = 7.980
AILRON = .000 ELEVON = .000
GRID = 8.000 PO = 300.000

RUN NO. 929/ 0 GRADIENT INTERVAL = -5.00/ 5.00

DLT-X	DLT-Z	CN	CA	CLM	CY	CYN	CBL	XCP/L	YCP/L	CPB
200.330	398.160	-.32799	.10847	-.04672	-.05169	-.00627	.00065	.45882	.47360	.00000
200.290	499.060	-.35563	.12345	-.02590	-.05072	-.00662	.00049	.50745	.46717	.00000
200.250	600.020	-.37031	.13849	-.01225	-.04483	-.01026	.00064	.53524	.39848	.00000
200.440	700.180	-.34769	.12107	-.02623	-.04646	-.00856	.00033	.50564	.42961	.00000
200.490	800.190	-.33624	.11899	-.03318	-.04761	-.00822	.00038	.48940	.43765	.00000
	GRADIENT	.00000	.00000	.00000	.00000	.00000	.00000	.00000	.00000	.00000

RUN NO. 930/ 0 GRADIENT INTERVAL = -5.00/ 5.00

DLT-X	DLT-Z	CN	CA	CLM	CY	CYN	CBL	XCP/L	YCP/L	CPB
400.540	400.970	-.31393	.10479	-.05632	-.04997	-.00572	.00065	.43299	.47841	.00000
400.470	500.680	-.34580	.11571	-.03571	-.05013	-.00587	.00061	.48620	.47658	.00000
400.390	600.620	-.36741	.12973	-.01834	-.04889	-.00740	.00041	.52347	.45259	.00000
400.300	700.380	-.36217	.13364	-.01735	-.04489	-.00921	.00047	.52486	.41503	.00000
400.370	800.110	-.34106	.11843	-.03009	-.04732	-.00831	.00035	.49670	.43563	.00000
	GRADIENT	.00000	.00000	.00000	.00000	.00000	.00000	.00000	.00000	.00000

AEDC VA422(IA17) ORB AND ET SEPARATING(ET DATA) (ATR170) (24 JUL 75)

REFERENCE DATA

SREF = 2690.0000 SQ.FT. XMRP = 1360.1000 IN. XT
LREF = 1290.3000 IN. YMRP = .0000 IN. YT
BREF = 1290.3000 IN. ZMRP = 416.4000 IN. ZT
SCALE = .0100

PARAMETRIC DATA

DLT-Y = .000 ALPHA = -10.000
BETA = 3.000 DLTALF = -15.000
DLTBTA = .000 MACH = 7.980
AILRON = .000 ELEVON = .000
GRID = 8.000 PO = 300.000

RUN NO. 934/ 0 GRADIENT INTERVAL = -5.00/ 5.00

DLT-X	DLT-Z	CN	CA	CLM	CY	CYN	CBL	XCP/L	YCP/L	CPB
.412	502.390	-.46869	.11319	-.04367	-.05441	-.00346	.00130	.49325	.51392	.00000
.497	603.410	-.52301	.15011	-.00844	-.05129	-.00536	.00145	.54707	.48530	.00000
.415	702.920	-.52749	.16255	.00497	-.05041	-.00721	.00060	.56493	.45844	.00000
.985	804.670	-.47472	.14053	-.02537	-.05092	-.00636	.00032	.52101	.47104	.00000
	GRADIENT	.00000	.00000	.00000	.00000	.00000	.00000	.00000	.00000	.00000

AEDC VA422(IA17) ORB AND ET SEPARATING(ET DATA) (ATR170) (24 JUL 75)

REFERENCE DATA

SREF = 2690.0000 SQ.FT. XMRP = 1360.1000 IN. XT
LREF = 1290.3000 IN. YMRP = .0000 IN. YT
BREF = 1290.3000 IN. ZMRP = 416.4000 IN. ZT
SCALE = .0100

PARAMETRIC DATA

DLT-Y = .000 ALPHA = -10.000
BETA = 3.000 DLTALF = -15.000
DLTBTA = .000 MACH = 7.980
AILRON = .000 ELEVON = .000
GRID = 8.000 PO = 300.000

RUN NO. 935/ 0 GRADIENT INTERVAL = -5.00/ 5.00

DLT-X	DLT-Z	CN	CA	CLM	CY	CYN	CBL	XCP/L	YCP/L	CPB
200.290	496.650	-.44305	.11183	-.05767	-.05741	-.00395	.00109	.46740	.51028	.00000
200.540	600.540	-.50190	.14252	-.02173	-.05553	-.00413	.00137	.52810	.50635	.00000
200.170	700.250	-.55425	.18316	.01961	-.04710	-.00808	.00192	.58306	.43855	.00000
200.290	797.990	-.49614	.14866	-.01408	-.05230	-.00698	.00036	.53854	.46510	.00000
	GRADIENT	.00000	.00000	.00000	.00000	.00000	.00000	.00000	.00000	.00000

RUN NO. 936/ 0 GRADIENT INTERVAL = -5.00/ 5.00

DLT-X	DLT-Z	CN	CA	CLM	CY	CYN	CBL	XCP/L	YCP/L	CPB
400.480	501.630	-.42447	.11140	-.06959	-.05616	-.00378	.00092	.44381	.51137	.00000
400.490	600.790	-.47339	.13356	-.03658	-.05665	-.00295	.00071	.50435	.52198	.00000
400.550	700.680	-.50358	.14883	-.01376	-.05449	-.00433	.00053	.53925	.50280	.00000
400.380	800.370	-.50826	.15822	-.00565	-.05039	-.00827	.00055	.55057	.44374	.00000
	GRADIENT	.00000	.00000	.00000	.00000	.00000	.00000	.00000	.00000	.00000

AEDC VA422(IA17) ORB AND ET SEPARATING(ET DATA) (ATR171) (24 JUL 75)

REFERENCE DATA

SREF = 2690.0000 SQ.FT. XMRP = 1360.1000 IN. XT
LREF = 1290.3000 IN. YMRP = .0000 IN. YT
BREF = 1290.3000 IN. ZMRP = 416.4000 IN. ZT
SCALE = .0100

PARAMETRIC DATA

DLT-Y = .000 ALPHA = -5.000
BETA = .000 DLTALF = .000
DLTBTA = .000 MACH = 7.980
AILRON = .000 ELEVON = .000
GRID = 8.000 PO = 300.000

RUN NO. 938/ 0 GRADIENT INTERVAL = -5.00/ 5.00

DLT-X	DLT-Z	CN	CA	CLM	CY	CYN	CBL	XCP/L	YCP/L	CPB
.412	19.367	-.09331	.08558	-.01479	.00104	.00012	.00037	.44758	.00000	.00000
.491	101.490	-.08706	.08758	-.01052	.00123	-.00041	.00013	.47392	.00000	.00000
.475	201.840	-.07615	.08699	-.01026	-.00203	-.00049	.00008	.46421	.00000	.00000
.484	300.620	-.06549	.08319	-.01580	-.00156	-.00068	.00010	.38982	.00000	.00000
.532	400.230	-.06484	.08290	-.01720	-.00100	-.00058	.00008	.37303	.00000	.00000
.556	496.790	-.06426	.08301	-.01730	-.00157	-.00073	.00008	.37025	.00000	.00000
	GRADIENT	.00000	.00000	.00000	.00000	.00000	.00000	.00000	.00000	.00000

ORIGINAL PAGE IS OF POOR QUALITY

AEDC VA422(IA17) ORB AND ET SEPARATING(ET DATA) (ATR171) (24 JUL 75)

REFERENCE DATA

SREF = 2690.0000 SQ.FT. XMRP = 1360.1000 IN. XT
LREF = 1290.3000 IN. YMRP = .0000 IN. YT
BREF = 1290.3000 IN. ZMRP = 416.4000 IN. ZT
SCALE = .0100

PARAMETRIC DATA

DLT-Y = .000 ALPHA = -5.000
BETA = .000 DLTALF = .000
DLTBTA = .000 MACH = 7.980
AILRON = .000 ELEVON = .000
GRID = 8.000 PO = 300.000

RUN NO. 939/ 0 GRADIENT INTERVAL = -5.00/ 5.00

DLT-X	DLT-Z	CN	CA	CLM	CY	CYN	CBL	XCP/L	YCP/L	CPB
200.460	22.614	-.10490	.08866	-.02003	.00380	-.00030	.00038	.42495	.00000	.00000
200.390	97.983	-.08615	.08790	-.01085	.00004	-.00031	.00007	.47026	.00000	.00000
200.440	198.540	-.07511	.08357	-.01215	-.00192	-.00045	.00008	.44531	.00000	.00000
200.480	298.470	-.07193	.08757	-.01121	-.00093	-.00119	.00010	.44947	.00000	.00000
200.510	399.900	-.06479	.08236	-.01713	-.00107	-.00055	.00008	.37363	.00000	.00000
200.530	500.150	-.06587	.08288	-.01737	-.00130	-.00062	.00007	.37408	.00000	.00000
	GRADIENT	.00000	.00000	.00000	.00000	.00000	.00000	.00000	.00000	.00000

AEDC VA422(IA17) ORB AND ET SEPARATING(ET DATA) (ATR172) (24 JUL 75)

REFERENCE DATA

SREF = 2690.0000 SQ.FT. XMRP = 1360.1000 IN. XT
LREF = 1290.3000 IN. YMRP = .0000 IN. YT
BREF = 1290.3000 IN. ZMRP = 416.4000 IN. ZT
SCALE = .0100

PARAMETRIC DATA

DLT-Y = .000 ALPHA = -5.000
BETA = .000 DLTALF = -5.000
DLTBTA = .000 MACH = 7.980
AILRON = .000 ELEVON = .000
GRID = 8.000 PO = 300.000

RUN NO. 942/ 0 GRADIENT INTERVAL = -5.00/ 5.00

DLT-X	DLT-Z	CN	CA	CLM	CY	CYN	CBL	XCP/L	YCP/L	CPB
.566	200.050	-.20949	.12588	.01209	.00137	-.00164	.00053	.59866	.00000	.00000
.422	301.780	-.14834	.09737	-.01930	-.00062	-.00031	.00016	.46745	.00000	.00000
.538	400.270	-.13527	.09263	-.02671	-.00029	-.00041	.00017	.42039	.00000	.00000
.454	500.200	-.12978	.08886	-.03091	-.00002	-.00011	.00012	.39195	.00000	.00000
-.037	598.900	-.12879	.08872	-.03059	-.00074	-.00041	.00013	.39242	.00000	.00000
	GRADIENT	.00000	.00000	.00000	.00000	.00000	.00000	.00000	.00000	.00000

RUN NO. 943/ 0 GRADIENT INTERVAL = -5.00/ 5.00

DLT-X	DLT-Z	CN	CA	CLM	CY	CYN	CBL	XCP/L	YCP/L	CPB
200.450	197.470	-.17267	.10384	-.01040	.00027	-.00093	.00025	.51625	.00000	.00000
200.500	297.400	-.14568	.09229	-.02261	-.00048	-.00017	.00013	.44989	.00000	.00000
200.460	398.790	-.14543	.09771	-.02023	.00040	-.00084	.00026	.46114	.00000	.00000
200.530	500.090	-.13114	.08986	-.03063	.00010	.00001	.00011	.39516	.00000	.00000
200.500	600.080	-.13003	.09017	-.03075	-.00018	-.00024	.00011	.39311	.00000	.00000
	GRADIENT	.00000	.00000	.00000	.00000	.00000	.00000	.00000	.00000	.00000

AEDC VA422(IA17) ORB AND ET SEPARATING(ET DATA) (ATR173) (24 JUL 75)

REFERENCE DATA

SREF = 2690.0000 SQ.FT. XMRP = 1360.1000 IN. XT
LREF = 1290.3000 IN. YMRP = .0000 IN. YT
BREF = 1290.3000 IN. ZMRP = 416.4000 IN. ZT
SCALE = .0100

PARAMETRIC DATA

DLT-Y = .000 ALPHA = -5.000
BETA = .000 DLTALF = -10.000
DLTBTA = .000 MACH = 7.980
AILRON = .000 ELEVON = .000
GRID = 8.000 PO = 300.000

RUN NO. 944/ 0 GRADIENT INTERVAL = -5.00/ 5.00

DLT-X	DLT-Z	CN	CA	CLM	CY	CYN	CBL	XCP/L	YCP/L	CPB
.439	403.050	-.25436	.11886	-.01556	.00178	-.00115	.00039	.51561	.00000	.00000
.412	500.550	-.23293	.11016	-.02788	.00213	-.00056	.00034	.47472	.00000	.00000
-.083	601.320	-.21631	.10069	-.03809	.00169	.00012	.00025	.43532	.00000	.00000
	GRADIENT	.00000	.00000	.00000	.00000	.00000	.00000	.00000	.00000	.00000

RUN NO. 945/ 0 GRADIENT INTERVAL = -5.00/ 5.00

DLT-X	DLT-Z	CN	CA	CLM	CY	CYN	CBL	XCP/L	YCP/L	CPB
200.410	398.530	-.24099	.10710	-.02644	.00144	-.00034	.00025	.48168	.00000	.00000
200.400	499.170	-.24451	.11565	-.02062	.00291	-.00111	.00042	.49942	.00000	.00000
200.530	600.230	-.22180	.10028	-.03489	.00079	-.00007	.00024	.44843	.00000	.00000
	GRADIENT	.00000	.00000	.00000	.00000	.00000	.00000	.00000	.00000	.00000

RUN NO. 946/ 0 GRADIENT INTERVAL = -5.00/ 5.00

DLT-X	DLT-Z	CN	CA	CLM	CY	CYN	CBL	XCP/L	YCP/L	CPB
400.440	400.860	-.22914	.10005	-.03594	.00094	.00028	.00019	.44876	.00000	.00000
400.470	500.400	-.24226	.11006	-.02372	.00108	-.00006	.00020	.48995	.00000	.00000
400.410	600.010	-.23234	.10858	-.02762	.00258	-.00053	.00033	.47530	.00000	.00000
	GRADIENT	.00000	.00000	.00000	.00000	.00000	.00000	.00000	.00000	.00000

ORIGINAL PAGE IS OF POOR QUALITY

AEDC VA422(IA17) ORB AND ET SEPARATING(ET DATA) (ATR174) (24 JUL 75)

REFERENCE DATA

SREF = 2690.0000 SQ.FT. XMRP = 1360.1000 IN. XT
LREF = 1290.3000 IN. YMRP = .0000 IN. YT
BREF = 1290.3000 IN. ZMRP = 416.4000 IN. ZT
SCALE = .0100

PARAMETRIC DATA

DLT-Y = .000 ALPHA = -5.000
BETA = .000 DLTALF = -15.000
DLTBTA = .000 MACH = 7.980
AILRON = .000 ELEVON = .000
GRID = 8.000 PO = 300.000

RUN NO. 950/ 0 GRADIENT INTERVAL = -5.00/ 5.00

DLT-X	DLT-Z	CN	CA	CLM	CY	CYN	CBL	XCP/L	YCP/L	CPB
.552	502.270	-.37110	.12871	-.01849	.00433	-.00041	.00061	.52352	.00000	.00000
.394	600.410	-.41108	.16924	.01456	.00989	-.00356	.00158	.58309	.80970	.00000
.446	750.420	-.33095	.11947	-.03543	.00480	-.00041	.00040	.48355	.00000	.00000
.297	804.100	-.33026	.12006	-.03523	.00400	-.00068	.00040	.48382	.00000	.00000
	GRADIENT	.00000	.00000	.00000	.00000	.00000	.00000	.00000	.00000	.00000

RUN NO. 951/ 0 GRADIENT INTERVAL = -5.00/ 5.00

DLT-X	DLT-Z	CN	CA	CLM	CY	CYN	CBL	XCP/L	YCP/L	CPB
200.340	496.310	-.35273	.12568	-.02675	.00378	-.00049	.00030	.50535	.00000	.00000
200.250	600.000	-.40941	.16449	.01041	.00426	-.00170	.00078	.57610	.00000	.00000
200.500	747.630	-.33577	.11788	-.03202	.00494	-.00054	.00034	.49172	.00000	.00000
200.540	800.200	-.32898	.11843	-.03567	.00430	-.00058	.00038	.48260	.00000	.00000
	GRADIENT	.00000	.00000	.00000	.00000	.00000	.00000	.00000	.00000	.00000

RUN NO. 952/ 0 GRADIENT INTERVAL = -5.00/ 5.00

DLT-X	DLT-Z	CN	CA	CLM	CY	CYN	CBL	XCP/L	YCP/L	CPB
400.430	500.910	-.33541	.11349	-.04057	.00452	.00026	.00022	.47384	.00000	.00000
400.300	600.520	-.36059	.13121	-.01909	.00479	-.00060	.00027	.52135	.00000	.00000
400.350	750.150	-.34640	.12603	-.02507	.00589	-.00086	.00040	.50778	.00000	.00000
400.440	800.300	-.33490	.11809	-.03239	.00410	-.00051	.00035	.49077	.00000	.00000
	GRADIENT	.00000	.00000	.00000	.00000	.00000	.00000	.00000	.00000	.00000

AEDC VA422(IA17) ORB AND ET SEPARATING(ET DATA) (ATR176) (24 JUL 75)

REFERENCE DATA

SREF = 2690.0000 SQ.FT. XMRP = 1360.1000 IN. XT
LREF = 1290.3000 IN. YMRP = .0000 IN. YT
BREF = 1290.3000 IN. ZMRP = 416.4000 IN. ZT
SCALE = .0100

PARAMETRIC DATA

DLT-Y = .000 ALPHA = -5.000
BETA = .000 DLTALF = -20.000
DLTBTA = .000 MACH = 7.980
AILRON = .000 ELEVON = .000
GRID = 8.000 PO = 300.000

RUN NO. 957/ 0 GRADIENT INTERVAL = -5.00/ 5.00

DLT-X	DLT-Z	CN	CA	CLM	CY	CYN	CBL	XCP/L	YCP/L	CPB
.295	803.800	-.50363	.14090	-.00935	.00746	-.00073	.00049	.54537	.00000	.00000
.427	900.800	-.46787	.14169	-.02971	.01013	-.00107	.00062	.51397	.63191	.00000
.373	1000.400	-.46752	.14138	-.02938	.00880	-.00112	.00063	.51444	.64747	.00000
	GRADIENT	.00000	.00000	.00000	.00000	.00000	.00000	.00000	.00000	.00000

RUN NO. 953/ 0 GRADIENT INTERVAL = -5.00/ 5.00

DLT-X	DLT-Z	CN	CA	CLM	CY	CYN	CBL	XCP/L	YCP/L	CPB
200.520	751.320	-.55658	.17602	.01810	.01073	-.00123	.00107	.58106	.63874	.00000
200.400	803.580	-.54464	.18901	.01902	.01138	-.00208	.00144	.58274	.68622	.00000
200.470	900.420	-.46646	.14155	-.02922	.00944	-.00096	.00061	.51457	.62976	.00000
200.360	1000.300	-.46502	.14265	-.02925	.00836	-.00121	.00063	.51440	.65953	.00000
	GRADIENT	.00000	.00000	.00000	.00000	.00000	.00000	.00000	.00000	.00000

RUN NO. 954/ 0 GRADIENT INTERVAL = -5.00/ 5.00

DLT-X	DLT-Z	CN	CA	CLM	CY	CYN	CBL	XCP/L	YCP/L	CPB
400.430	747.760	-.54516	.17174	.01068	.00961	-.00056	.00107	.57202	.59879	.00000
400.180	800.310	-.56868	.19688	.03176	.01185	-.00223	.00160	.59736	.68994	.00000
400.480	898.500	-.48284	.14309	-.02060	.01005	-.00076	.00058	.52854	.61140	.00000
400.310	1000.300	-.46720	.14173	-.02931	.00985	-.00097	.00063	.51452	.62721	.00000
	GRADIENT	.00000	.00000	.00000	.00000	.00000	.00000	.00000	.00000	.00000

AEDC VA422(IA17) ORB AND ET SEPARATING(ET DATA) (ATR177) (24 JUL 75)

REFERENCE DATA

SREF = 2690.0000 SQ.FT. XMRP = 1360.1000 IN. XT
LREF = 1290.3000 IN. YMRP = .0000 IN. YT
BREF = 1290.3000 IN. ZMRP = 416.4000 IN. ZT
SCALE = .0100

PARAMETRIC DATA

DLT-Y = .000 ALPHA = 5.000
BETA = .000 DLTALF = .000
DLTBTA = .000 MACH = 7.980
AILRON = .000 ELEVON = .000
GRID = 24.000 PO = 300.000

RUN NO. 968/ 0 GRADIENT INTERVAL = -5.00/ 5.00

DLT-X	DLT-Z	CN	CA	CLM	CY	CYN	CBL	XCP/L	YCP/L	CPB
.494	18.595	.01862	.08324	.02662	-.00259	-.00130	.00017	-.44074	.00000	.00000
.551	98.645	.02229	.08269	.02651	-.00247	-.00134	.00014	-.27273	.00000	.00000
.559	199.360	.04164	.07786	.02305	-.00373	-.00142	.00014	.17162	.00000	.00000
.518	301.220	.05024	.07622	.01900	-.00383	-.00129	.00010	.29409	.00000	.00000
.529	401.600	.05004	.07652	.01919	-.00364	-.00126	.00010	.29046	.00000	.00000
.777	498.710	.05109	.07735	.01924	-.00395	-.00116	.00011	.29522	.00000	.00000
	GRADIENT	.00000	.00000	.00000	.00000	.00000	.00000	.00000	.00000	.00000

RUN NO. 969/ 0 GRADIENT INTERVAL = -5.00/ 5.00

DLT-X	DLT-Z	CN	CA	CLM	CY	CYN	CBL	XCP/L	YCP/L	CPB
200.630	22.589	.00838	.08306	.01780	-.00218	-.00146	.00030	-.92666	.00000	.00000
200.510	100.220	.01610	.08332	.02803	-.00220	-.00111	.00014	-.65832	.00000	.00000
200.620	200.500	.03904	.07772	.02426	-.00324	-.00129	.00013	.12432	.00000	.00000
200.580	299.820	.04997	.07622	.01915	-.00394	-.00132	.00011	.29057	.00000	.00000
200.580	397.870	.05066	.07680	.01925	-.00411	-.00119	.00010	.29278	.00000	.00000
200.580	499.340	.05028	.07659	.01932	-.00470	-.00125	.00011	.28984	.00000	.00000
	GRADIENT	.00000	.00000	.00000	.00000	.00000	.00000	.00000	.00000	.00000

AEDC VA422(IA17) ORB AND ET SEPARATING(ET DATA) (ATR178) (24 JUL 75)

REFERENCE DATA

SREF = 2690.0000 SQ.FT. XMRP = 1360.1000 IN. XT
LREF = 1290.3000 IN. YMRP = .0000 IN. YT
BREF = 1290.3000 IN. ZMRP = 416.4000 IN. ZT
SCALE = .0100

PARAMETRIC DATA

DLT-Y = .000 ALPHA = 5.000
BETA = .000 DLTALF = -5.000
DLTBTA = .000 MACH = 7.980
AILRON = .000 ELEVON = .000
GRID = 24.000 PO = 300.000

RUN NO. 972/ 0 GRADIENT INTERVAL = -5.00/ 5.00

DLT-X	DLT-Z	CN	CA	CLM	CY	CYN	CBL	XCP/L	YCP/L	CPB
.472	201.540	-.07764	.10569	.03563	-.00017	-.00230	.00024	.87891	.00000	.00000
.504	300.210	-.01231	.07767	.00426	-.00245	-.00082	.00013	.80042	.00000	.00000
.468	402.200	-.00545	.07671	.00098	-.00320	-.00096	.00012	.68442	.00000	.00000
.524	501.110	-.00592	.07790	.00097	-.00227	-.00066	.00010	.67335	.00000	.00000
-.308	600.440	-.00590	.07812	.00091	-.00236	-.00085	.00012	.66574	.00000	.00000
	GRADIENT	.00000	.00000	.00000	.00000	.00000	.00000	.00000	.00000	.00000

RUN NO. 973/ 0 GRADIENT INTERVAL = -5.00/ 5.00

DLT-X	DLT-Z	CN	CA	CLM	CY	CYN	CBL	XCP/L	YCP/L	CPB
200.400	199.720	-.09078	.11367	.04318	.00111	-.00271	.00026	.89061	.00000	.00000
200.590	299.030	-.01868	.07940	.00798	-.00168	-.00096	.00017	.85685	.00000	.00000
200.540	398.260	-.00547	.07689	.00111	-.00240	-.00088	.00010	.69977	.00000	.00000
200.500	498.370	-.00547	.07781	.00109	-.00223	-.00056	.00010	.69725	.00000	.00000
200.460	599.750	-.00583	.07804	.00095	-.00368	-.00110	.00012	.67279	.00000	.00000
	GRADIENT	.00000	.00000	.00000	.00000	.00000	.00000	.00000	.00000	.00000

AEDC VA422(IA17) ORB AND ET SEPARATING(ET DATA) (ATR179) (24 JUL 75)

REFERENCE DATA

SREF = 2690.0000 SQ.FT. XMRP = 1360.1000 IN. XT
LREF = 1290.3000 IN. YMRP = .0000 IN. YT
BREF = 1290.3000 IN. ZMRP = 416.4000 IN. ZT
SCALE = .0100

PARAMETRIC DATA

DLT-Y = .000 ALPHA = 5.000
BETA = .000 DLTALF = -10.000
DLTBTA = .000 MACH = 7.980
AILRON = .000 ELEVON = .000
GRID = 24.000 PO = 300.000

RUN NO. 974/ 0 GRADIENT INTERVAL = -5.00/ 5.00

DLT-X	DLT-Z	CN	CA	CLM	CY	CYN	CBL	XCP/L	YCP/L	CPB
.592	401.840	-.06892	.08451	-.01123	-.00128	-.00056	.00001	.44452	.00000	.00000
.453	502.380	-.06220	.08382	-.01634	-.00115	-.00076	.00004	.37483	.00000	.00000
-.874	603.040	-.06266	.08518	-.01654	-.00227	-.00064	.00001	.37393	.00000	.00000
	GRADIENT	.00000	.00000	.00000	.00000	.00000	.00000	.00000	.00000	.00000

ORIGINAL PAGE IS OF POOR QUALITY

AEDC VA422(IA17) ORB AND ET SEPARATING(ET DATA) (ATR179) (24 JUL 75)

REFERENCE DATA

SREF = 2690.0000 SQ.FT. XMRP = 1360.1000 IN. XT
LREF = 1290.3000 IN. YMRP = .0000 IN. YT
BREF = 1290.3000 IN. ZMRP = 416.4000 IN. ZT
SCALE = .0100

PARAMETRIC DATA

DLT-Y = .000 ALPHA = 5.000
BETA = .000 DLTALF = -10.000
DLTBTA = .000 MACH = 7.980
AILRON = .000 ELEVON = .000
GRID = 24.000 PO = 300.000

RUN NO. 975/ 0 GRADIENT INTERVAL = -5.00/ 5.00

DLT-X	DLT-Z	CN	CA	CLM	CY	CYN	CBL	XCP/L	YCP/L	CPB
200.330	399.730	-.07846	.09025	-.00534	-.00114	-.00059	-.00001	.51079	.00000	.00000
200.540	497.180	-.06099	.08352	-.01609	-.00092	-.00040	.00002	.37402	.00000	.00000
200.530	598.820	-.06051	.08492	-.01614	-.00138	-.00045	.00003	.37197	.00000	.00000
	GRADIENT	.00000	.00000	.00000	.00000	.00000	.00000	.00000	.00000	.00000

RUN NO. 976/ 0 GRADIENT INTERVAL = -5.00/ 5.00

DLT-X	DLT-Z	CN	CA	CLM	CY	CYN	CBL	XCP/L	YCP/L	CPB
400.360	401.760	-.09271	.10122	.00276	-.00122	-.00121	.00006	.57910	.00000	.00000
400.460	500.360	-.06159	.08407	-.01631	-.00163	-.00048	.00004	.37340	.00000	.00000
400.500	600.000	-.06151	.08480	-.01626	-.00164	-.00064	-.00001	.37362	.00000	.00000
	GRADIENT	.00000	.00000	.00000	.00000	.00000	.00000	.00000	.00000	.00000

AEDC VA422(IA17) ORB AND ET SEPARATING(ET DATA) (ATR180) (24 JUL 75)

REFERENCE DATA

SREF = 2690.0000 SQ.FT. XMRP = 1360.1000 IN. XT
LREF = 1290.3000 IN. YMRP = .0000 IN. YT
BREF = 1290.3000 IN. ZMRP = 416.4000 IN. ZT
SCALE = .0100

PARAMETRIC DATA

DLT-Y = .000 ALPHA = 5.000
BETA = .000 DLTALF = -15.000
DLTBTA = .000 MACH = 7.980
AILRON = .000 ELEVON = .000
GRID = 24.000 PO = 300.000

RUN NO. 980/ 0 GRADIENT INTERVAL = -5.00/ 5.00

DLT-X	DLT-Z	CN	CA	CLM	CY	CYN	CBL	XCP/L	YCP/L	CPB
.560	504.300	-.14427	.09685	-.01706	-.00053	-.00058	.00012	.47573	.00000	.00000
.524	602.780	-.12515	.09007	-.02988	-.00103	-.00028	-.00000	.39155	.00000	.00000
.488	750.180	-.12520	.09245	-.02976	-.00099	-.00046	.00004	.39228	.00000	.00000
-.853	804.710	-.12754	.09102	-.03011	-.00155	-.00034	-.00003	.39342	.00000	.00000
	GRADIENT	.00000	.00000	.00000	.00000	.00000	.00000	.00000	.00000	.00000

AEDC VA422(IA17) ORB AND ET SEPARATING(ET DATA) (ATR180) (24 JUL 75)

REFERENCE DATA

SREF = 2690.0000 SQ.FT. XMRP = 1380.1000 IN. XT
LREF = 1290.3000 IN. YMRP = .0000 IN. YT
BREF = 1290.3000 IN. ZMRP = 416.4000 IN. ZT
SCALE = .0100

PARAMETRIC DATA

DLT-Y = .000 ALPHA = 5.000
BETA = .000 DLTALF = -15.000
DLTBTA = .000 MACH = 7.980
AILRON = .000 ELEVON = .000
GRID = 24.000 PO = 300.000

RUN NO. 981/ 0 GRADIENT INTERVAL = -5.00/ 5.00

DLT-X	DLT-Z	CN	CA	CLM	CY	CYN	CBL	XCP/L	YCP/L	CPB
200.510	500.410	-.17242	.10995	.00070	.00219	-.00160	.00024	.56118	.00000	.00000
200.470	597.230	-.12553	.08930	-.02943	-.00005	-.00015	-.00008	.39458	.00000	.00000
200.430	749.210	-.12480	.09068	-.02984	-.00109	-.00034	-.00006	.39130	.00000	.00000
200.530	800.010	-.12471	.09145	-.02996	-.00094	-.00050	.00002	.39050	.00000	.00000
	GRADIENT	.00000	.00000	.00000	.00000	.00000	.00000	.00000	.00000	.00000

RUN NO. 982/ 0 GRADIENT INTERVAL = -5.00/ 5.00

DLT-X	DLT-Z	CN	CA	CLM	CY	CYN	CBL	XCP/L	YCP/L	CPB
400.420	501.550	-.18301	.12153	.00610	.00142	-.00178	.00022	.58163	.00000	.00000
400.410	600.270	-.12633	.09029	-.02873	-.00215	-.00053	.00002	.39946	.00000	.00000
400.450	750.020	-.12528	.09107	-.03002	-.00110	-.00045	.00006	.39094	.00000	.00000
400.480	800.030	-.12520	.09082	-.02991	-.00177	-.00050	-.00003	.39141	.00000	.00000
	GRADIENT	.00000	.00000	.00000	.00000	.00000	.00000	.00000	.00000	.00000

ORIGINAL PAGE IS OF POOR QUALITY

AEDC VA422(IA17) ORB AND ET SEPARATING(ET DATA) (ATR182) (24 JUL 75)

REFERENCE DATA

SREF = 2690.0000 SQ.FT. XMRP = 1360.1000 IN. XT
LREF = 1290.3000 IN. YMRP = .0000 IN. YT
BREF = 1290.3000 IN. ZMRP = 416.4000 IN. ZT
SCALE = .0100

PARAMETRIC DATA

DLT-Y = .000 ALPHA = 5.000
BETA = .000 DLTALF = -20.000
DLTBTA = .000 MACH = 7.980
AILRON = .000 ELEVON = .000
GRID = 24.000 PO = 300.000

RUN NO. 987/ 0 GRADIENT INTERVAL = -5.00/ 5.00

DLT-X	DLT-Z	CN	CA	CLM	CY	CYN	CBL	XCP/L	YCP/L	CPB
.531	801.010	-.21221	.09795	-.03758	.00072	-.00014	.00024	.43469	.00000	.00000
.374	900.180	-.21184	.09800	-.03754	.00014	-.00020	.00023	.43454	.00000	.00000
.524	1000.300	-.21313	.09837	-.03788	.00023	-.00010	.00024	.43417	.00000	.00000
	GRADIENT	.00000	.00000	.00000	.00000	.00000	.00000	.00000	.00000	.00000

AEDC VA422(IA17) ORB AND ET SEPARATING(ET DATA) (ATR182) (24 JUL 75)

REFERENCE DATA

SREF = 2690.0000 SQ.FT. XMRP = 1360.1000 IN. XT
LREF = 1290.3000 IN. YMRP = .0000 IN. YT
BREF = 1290.3000 IN. ZMRP = 416.4000 IN. ZT
SCALE = .0100

PARAMETRIC DATA

DLT-Y = .000 ALPHA = 5.000
BETA = .000 DLTALF = -20.000
DLTBTA = .000 MACH = 7.980
AILRON = .000 ELEVON = .000
GRID = 24.000 PO = 300.000

RUN NO. 983/ 0 GRADIENT INTERVAL = -5.00/ 5.00

DLT-X	DLT-Z	CN	CA	CLM	CY	CYN	CBL	XCP/L	YCP/L	CPB
200.410	750.350	-.21184	.10177	-.03796	.00082	-.00013	.00020	.43315	.00000	.00000
200.410	800.210	-.21085	.10350	-.03803	.00091	-.00003	.00020	.43232	.00000	.00000
200.490	900.260	-.21262	.10265	-.03773	.00066	.00024	.00020	.43437	.00000	.00000
200.420	1000.200	-.21283	.10276	-.03808	.00050	-.00017	.00017	.43333	.00000	.00000
	GRADIENT	.00000	.00000	.00000	.00000	.00000	.00000	.00000	.00000	.00000

RUN NO. 984/ 0 GRADIENT INTERVAL = -5.00/ 5.00

DLT-X	DLT-Z	CN	CA	CLM	CY	CYN	CBL	XCP/L	YCP/L	CPB
400.540	750.160	-.21164	.10193	-.03815	.00078	-.00020	.00016	.43241	.00000	.00000
400.520	800.210	-.21124	.10221	-.03804	.00024	-.00014	.00019	.43254	.00000	.00000
400.450	900.220	-.21237	.10218	-.03778	-.00004	-.00010	.00019	.43404	.00000	.00000
400.530	1000.300	-.21240	.10262	-.03821	.00095	.00009	.00019	.43265	.00000	.00000
	GRADIENT	.00000	.00000	.00000	.00000	.00000	.00000	.00000	.00000	.00000

AEDC VA422(IA17) ORB AND ET SEPARATING(ET DATA) (ATR201) (24 JUL 75)

REFERENCE DATA

SREF = 2690.0000 SQ.FT. XMRP = 1360.1000 IN. XT
LREF = 1290.3000 IN. YMRP = .0000 IN. YT
BREF = 1290.3000 IN. ZMRP = 416.4000 IN. ZT
SCALE = .0100

PARAMETRIC DATA

DLT-Y = 60.000 ALPHA = .000
BETA = .000 DLTALF = .000
DLTBTA = .000 MACH = 5.930
AILRON = .000 ELEVON = .000
GRID = 1.000

RUN NO. 81/ 0 GRADIENT INTERVAL = -5.00/ 5.00

DLT-X	DLT-Z	CN	CA	CLM	CY	CYN	CBL	XCP/L	YCP/L	CPB
.462	17.363	-.03784	.08929	.00812	.00114	-.00005	.00007	.70835	.00000	-.02467
.448	101.480	-.03232	.08869	.00840	.00070	.00019	.00001	.73991	.00000	-.02578
.586	200.690	-.02145	.08929	.01014	.00296	.00012	.00009	.88859	.00000	-.02185
.523	299.570	-.00586	.08361	.00179	.00105	-.00059	.00005	.77248	.00000	-.02359
.562	398.180	-.00532	.08564	.00278	.00008	-.00097	.00006	.92372	.00000	-.02671
.607	499.360	-.00675	.08735	.00223	.00178	-.00065	.00003	.78959	.00000	-.02724
.621	600.100	-.00861	.08757	.00135	.00191	-.00071	.00003	.66791	.00000	-.02717
	GRADIENT	.00000	.00000	.00000	.00000	.00000	.00000	.00000	.00000	.00000

AEDC VA422(IA17) ORB AND ET SEPARATING(ET DATA) (ATR201) (24 JUL 75)

REFERENCE DATA

SREF = 2690.0000 SQ.FT. XMRP = 1360.1000 IN. XT
LREF = 1290.3000 IN. YMRP = .0000 IN. YT
BREF = 1290.3000 IN. ZMRP = 416.4000 IN. ZT
SCALE = .0100

PARAMETRIC DATA

DLT-Y = 60.000 ALPHA = .000
BETA = .000 DLTALF = .000
DLTBTA = .000 MACH = 5.930
AILRON = .000 ELEVON = .000
GRID = 1.000

RUN NO. 60/ 0 GRADIENT INTERVAL = -5.00/ 5.00

DLT-X	DLT-Z	CN	CA	CLM	CY	CYN	CBL	XCP/L	YCP/L	CPB
200.450	20.354	-.03887	.08710	-.00159	.00081	-.00182	.00010	.52973	.00000	-.02763
200.560	100.660	-.03586	.08985	.00927	.00028	.00025	.00001	.73897	.00000	-.02556
200.500	201.470	-.02398	.08888	.01075	.00105	-.00006	.00006	.87154	.00000	-.02136
200.650	302.010	-.00950	.08418	.00352	.00212	-.00018	.00005	.81702	.00000	-.02370
200.610	400.290	-.00546	.08535	.00278	.00002	-.00102	.00005	.91433	.00000	-.02660
200.430	500.070	-.00727	.08714	.00239	.00107	-.00091	.00004	.78811	.00000	-.02706
200.490	600.040	-.00770	.08773	.00115	.00041	-.00134	.00005	.66221	.00000	-.02722
	GRADIENT	.00000	.00000	.00000	.00000	.00000	.00000	.00000	.00000	.00000

RUN NO. 59/ 0 GRADIENT INTERVAL = -5.00/ 5.00

DLT-X	DLT-Z	CN	CA	CLM	CY	CYN	CBL	XCP/L	YCP/L	CPB
400.460	19.632	-.04438	.08932	-.00570	-.00110	-.00170	-.00001	.46862	.00000	-.02968
400.510	97.863	-.03870	.09071	.00912	.00137	-.00009	.00003	.72304	.00000	-.02695
400.650	198.730	-.02687	.08854	.01142	.00144	.00000	-.00001	.85536	.00000	-.02134
400.410	297.980	-.01417	.08658	.00695	.00210	-.00013	.00004	.90105	.00000	-.02367
400.620	399.120	-.00653	.08464	.00285	.00129	-.00097	.00003	.86254	.00000	-.02470
400.580	500.220	-.00725	.08644	.00259	.00051	-.00140	.00005	.80814	.00000	-.02675
400.600	600.210	-.00892	.08697	.00115	-.00024	-.00180	.00005	.64865	.00000	-.02712
	GRADIENT	.00000	.00000	.00000	.00000	.00000	.00000	.00000	.00000	.00000

AEDC VA422(1A17) ORB AND ET SEPARATING(ET DATA) (ATR202) (24 JUL 75)

REFERENCE DATA

SREF = 2690.0000 SQ.FT. XMRP = 1360.1000 IN. XT
LREF = 1290.3000 IN. YMRP = .0000 IN. YT
BREF = 1290.3000 IN. ZMRP = 416.4000 IN. ZT
SCALE = .0100

PARAMETRIC DATA

DLT-Y = 60.000 ALPHA = .000
BETA = .000 DLTALF = -10.000
DLTBTA = .000 MACH = 5.930
AILRON = .000 ELEVON = .000
GRID = 1.000

RUN NO. 69/ 0 GRADIENT INTERVAL = -5.00/ 5.00

DLT-X	DLT-Z	CN	CA	CLM	CY	CYN	CBL	XCP/L	YCP/L	CPB
.460	402.090	-.16123	.10476	-.01327	.00423	-.00027	.00014	.50083	.00000	-.02342
.552	498.840	-.13927	.08483	-.02599	.00371	.00008	.00005	.42798	.00000	-.02600
.625	598.500	-.13877	.09637	-.02917	.00320	.00003	.00001	.41150	.00000	-.02823
.471	800.170	-.14374	.09702	-.03018	.00001	-.00113	.00001	.41165	.00000	-.02824
	GRADIENT	.00000	.00000	.00000	.00000	.00000	.00000	.00000	.00000	.00000

RUN NO. 68/ 0 GRADIENT INTERVAL = -5.00/ 5.00

DLT-X	DLT-Z	CN	CA	CLM	CY	CYN	CBL	XCP/L	YCP/L	CPB
200.470	403.090	-.16972	.10876	-.00948	.00182	-.00047	.00002	.51930	.00000	-.02412
200.390	500.650	-.14805	.09920	-.02173	.00298	-.00066	.00014	.45579	.00000	-.02701
200.400	600.020	-.13974	.09685	-.02913	.00169	-.00049	.00004	.41269	.00000	-.02771
200.480	800.140	-.14301	.09578	-.03042	.00153	-.00036	.00003	.40971	.00000	-.02857
	GRADIENT	.00000	.00000	.00000	.00000	.00000	.00000	.00000	.00000	.00000

RUN NO. 67/ 0 GRADIENT INTERVAL = -5.00/ 5.00

DLT-X	DLT-Z	CN	CA	CLM	CY	CYN	CBL	XCP/L	YCP/L	CPB
400.530	400.360	-.16915	.10586	-.01163	.00288	-.00027	-.00001	.51031	.00000	-.02512
400.490	498.490	-.15623	.10347	-.01692	.00027	-.00105	.00017	.48265	.00000	-.02682
400.490	600.260	-.14160	.09575	-.02792	-.00100	-.00105	.00010	.42061	.00000	-.02654
400.570	800.310	-.14471	.09597	-.03015	.00258	-.00013	.00002	.41279	.00000	-.02861
	GRADIENT	.00000	.00000	.00000	.00000	.00000	.00000	.00000	.00000	.00000

AEDC VA422(IA17) ORB AND ET SEPARATING(ET DATA) (ATR203) (24 JUL 75)

REFERENCE DATA

SREF = 2690.0000 SQ.FT. XMRP = 1360.1000 IN. XT
LREF = 1290.3000 IN. YMRP = .0000 IN. YT
BREF = 1290.3000 IN. ZMRP = 416.4000 IN. ZT
SCALE = .0100

PARAMETRIC DATA

DLT-Y = 60.000 ALPHA = .000
BETA = .000 DLTALF = -20.000
DLTBTA = .000 MACH = 5.930
AILRON = .000 ELEVON = .000
GRID = 1.000

RUN NO. 78/ 0 GRADIENT INTERVAL = -5.00/ 5.00

DLT-X	DLT-Z	CN	CA	CLM	CY	CYN	CBL	XCP/L	YCP/L	CPB
.395	801.810	-.34291	.12248	-.04139	.00488	-.00075	.00029	.47402	.00000	-.02466
.448	998.660	-.34398	.12148	-.03815	.00400	-.00038	.00028	.48085	.00000	-.02707
	GRADIENT	.00000	.00000	.00000	.00000	.00000	.00000	.00000	.00000	.00000

RUN NO. 77/ 0 GRADIENT INTERVAL = -5.00/ 5.00

DLT-X	DLT-Z	CN	CA	CLM	CY	CYN	CBL	XCP/L	YCP/L	CPB
200.490	800.510	-.34903	.12165	-.03847	.00277	-.00076	.00035	.48134	.00000	-.02495
200.460	1000.400	-.34416	.12173	-.03837	.00396	-.00033	.00029	.48045	.00000	-.02706
	GRADIENT	.00000	.00000	.00000	.00000	.00000	.00000	.00000	.00000	.00000

RUN NO. 76/ 0 GRADIENT INTERVAL = -5.00/ 5.00

DLT-X	DLT-Z	CN	CA	CLM	CY	CYN	CBL	XCP/L	YCP/L	CPB
400.490	800.380	-.35832	.12525	-.03205	.00392	-.00075	.00037	.49585	.00000	-.02603
400.470	1000.300	-.34305	.12163	-.03835	.00588	-.00009	.00026	.48024	.00000	-.02694
	GRADIENT	.00000	.00000	.00000	.00000	.00000	.00000	.00000	.00000	.00000

ORIGINAL PAGE IS OF POOR QUALITY

AEDC VA422(IA17) ORB AND ET SEPARATING(ET DATA) (ATR205) (24 JUL 75)

REFERENCE DATA

SREF = 2690.0000 SQ.FT. XMRP = 1360.1000 IN. XT
LREF = 1290.3000 IN. YMRP = .0000 IN. YT
BREF = 1290.3000 IN. ZMRP = 416.4000 IN. ZT
SCALE = .0100

PARAMETRIC DATA

DLT-Y = 60.000 ALPHA = .000
BETA = .000 DLTALF = -20.000
DLTBTA = .000 MACH = 5.930
AILRON = .000 ELEVON = .000
GRID = 26.000

RUN NO. 382/ 0 GRADIENT INTERVAL = -5.00/ 5.00

DLT-X	DLT-Z	CN	CA	CLM	CY	CYN	CBL	XCP/L	YCP/L	CPB
.431	800.170	-.34160	.12670	-.04131	.00612	-.00028	.00034	.47385	.00000	.00000
.487	898.880	-.34308	.12477	-.04092	.00631	-.00003	.00037	.47501	.00000	.00000
.449	1000.100	-.34229	.12586	-.03796	.00612	.00021	.00034	.48086	.00000	.00000
	GRADIENT	.00000	.00000	.00000	.00000	.00000	.00000	.00000	.00000	.00000

AEDC VA422(IA17) ORB AND ET SEPARATING(ET DATA) (ATR205) (24 JUL 75)

REFERENCE DATA

SREF = 2690.0000 SQ.FT. XMRP = 1360.1000 IN. XT
LREF = 1290.3000 IN. YMRP = .0000 IN. YT
BREF = 1290.3000 IN. ZMRP = 416.4000 IN. ZT
SCALE = .0100

PARAMETRIC DATA

DLT-Y = 60.000 ALPHA = .000
BETA = .000 DLTALF = -20.000
DLTBTA = .000 MACH = 5.930
AILRON = .000 ELEVON = .000
GRID = 26.000

RUN NO. 375/ 0 GRADIENT INTERVAL = -5.00/ 5.00

DLT-X	DLT-Z	CN	CA	CLM	CY	CYN	CBL	XCP/L	YCP/L	CPB
200.530	751.030	-.35928	.13242	-.03081	.00599	-.00015	.00043	.49843	.00000	.00000
200.430	799.860	-.34837	.12813	-.03822	.00298	-.00043	.00039	.48170	.00000	.00000
200.380	900.300	-.34298	.12602	-.04017	.00422	-.00020	.00033	.47651	.00000	.00000
200.460	1000.200	-.34420	.12632	-.03795	.00581	.00005	.00034	.48132	.00000	.00000
	GRADIENT	.00000	.00000	.00000	.00000	.00000	.00000	.00000	.00000	.00000

RUN NO. 374/ 0 GRADIENT INTERVAL = -5.00/ 5.00

DLT-X	DLT-Z	CN	CA	CLM	CY	CYN	CBL	XCP/L	YCP/L	CPB
400.500	750.270	-.36870	.13860	-.02456	.00462	-.00117	.00045	.51180	.00000	.00000
400.470	800.330	-.35710	.12992	-.03241	.00385	-.00048	.00043	.49494	.00000	.00000
400.510	900.500	-.34257	.12732	-.03937	.00450	-.00045	.00031	.47805	.00000	.00000
400.350	1000.200	-.34294	.12663	-.03814	.00789	.00040	.00032	.48065	.52314	.00000
	GRADIENT	.00000	.00000	.00000	.00000	.00000	.00000	.00000	.00000	.00000

AEDC VA422(IA17) ORB AND ET SEPARATING(ET DATA) (ATR206) (24 JUL 75)

REFERENCE DATA

SREF = 2690.0000 SQ.FT. XMRP = 1360.1000 IN. XT
LREF = 1290.3000 IN. YMRP = .0000 IN. YT
BREF = 1290.3000 IN. ZMRP = 416.4000 IN. ZT
SCALE = .0100

PARAMETRIC DATA

DLT-Y = 60.000 ALPHA = .000
BETA = .000 DLTALF = .000
DLTBTA = 3.000 MACH = 5.930
AILRON = .000 ELEVON = .000
GRID = 1.000

RUN NO. 91/ 0 GRADIENT INTERVAL = -5.00/ 5.00

DLT-X	DLT-Z	CN	CA	CLM	CY	CYN	CBL	XCP/L	YCP/L	CPB
.533	18.952	-.04171	.08852	.00855	-.03672	-.01055	.00039	.70157	.35756	-.02371
.520	99.531	-.03407	.08729	.00813	-.03604	-.01101	.00039	.72505	.34486	-.02434
.568	200.570	-.02258	.08954	.01046	-.03475	-.01281	.00015	.88212	.30073	-.02000
.580	302.250	-.00686	.08374	.00182	-.03524	-.01250	.00029	.74408	.31060	-.02309
.591	400.940	-.00613	.08575	.00289	-.03593	-.01268	.00030	.88808	.31186	-.02564
.627	500.100	-.00758	.08771	.00245	-.03486	-.01250	.00029	.78388	.30777	-.02573
.640	600.090	-.00923	.08756	.00150	-.03528	-.01240	.00030	.67159	.31275	-.02546
	GRADIENT	.00000	.00000	.00000	.00000	.00000	.00000	.00000	.00000	.00000

AEDC VA422(IA17) ORB AND ET SEPARATING(ET DATA) (ATR206) (24 JUL 75)

REFERENCE DATA

SREF = 2690.0000 SQ.FT. XMRP = 1360.1000 IN. XT
LREF = 1290.3000 IN. YMRP = .0000 IN. YT
BREF = 1290.3000 IN. ZMRP = 416.4000 IN. ZT
SCALE = .0100

PARAMETRIC DATA

DLT-Y = 60.000 ALPHA = .000
BETA = .000 DLTALF = .000
DLTBTA = 3.000 MACH = 5.930
AILRON = .000 ELEVON = .000
GRID = 1.000

RUN NO. 92/ 0 GRADIENT INTERVAL = -5.00/ 5.00

DLT-X	DLT-Z	CN	CA	CLM	CY	CYN	CBL	XCP/L	YCP/L	CPB
200.560	23.025	-.04500	.08670	-.00159	-.03877	-.01175	.00046	.53367	.34658	-.02558
200.550	99.612	-.03749	.08867	.00916	-.03618	-.01043	.00037	.72914	.35686	-.02510
200.500	199.590	-.02510	.08805	.01145	-.03330	-.01256	.00021	.87710	.29469	-.01999
200.650	298.650	-.01035	.08433	.00407	-.03438	-.01269	.00025	.83264	.30048	-.02228
200.530	398.200	-.00647	.08512	.00335	-.03504	-.01239	.00029	.91993	.31122	-.02536
200.580	499.910	-.00785	.08714	.00277	-.03511	-.01307	.00030	.80509	.29834	-.02588
200.570	600.150	-.00976	.08846	.00154	-.03567	-.01292	.00031	.66893	.30533	-.02584
	GRADIENT	.00000	.00000	.00000	.00000	.00000	.00000	.00000	.00000	.00000

AEDC VA422(IA17) ORB AND ET SEPARATING(ET DATA) (ATR207) (24 JUL 75)

REFERENCE DATA

SREF = 2690.0000 SQ.FT. XMRP = 1360.1000 IN. XT
LREF = 1290.3000 IN. YMRP = .0000 IN. YT
BREF = 1290.3000 IN. ZMRP = 416.4000 IN. ZT
SCALE = .0100

PARAMETRIC DATA

DLT-Y = 60.000 ALPHA = .000
BETA = .000 DLTALF = -10.000
DLTBTA = 3.000 MACH = 5.930
AILRON = .000 ELEVON = .000
GRID = 1.000

RUN NO. 85/ 0 GRADIENT INTERVAL = -5.00/ 5.00

DLT-X	DLT-Z	CN	CA	CLM	CY	CYN	CBL	XCP/L	YCP/L	CPB
.502	403.750	-.16525	.10702	-.01148	-.03510	-.01056	.00031	.50983	.34810	-.02169
.574	501.740	-.14420	.09712	-.02541	-.03731	-.01077	.00026	.43522	.35669	-.02523
.440	600.100	-.14402	.09905	-.02834	-.03792	-.01040	.00029	.42087	.36669	-.02756
-.038	802.120	-.14855	.09798	-.02976	-.03937	-.01078	.00029	.41838	.36702	-.02751
	GRADIENT	.00000	.00000	.00000	.00000	.00000	.00000	.00000	.00000	.00000

RUN NO. 86/ 0 GRADIENT INTERVAL = -5.00/ 5.00

DLT-X	DLT-Z	CN	CA	CLM	CY	CYN	CBL	XCP/L	YCP/L	CPB
200.470	398.500	-.17176	.10767	-.00785	-.03721	-.00978	.00023	.52641	.37476	-.02224
200.470	497.310	-.15204	.10188	-.01888	-.03770	-.01121	.00031	.47159	.35061	-.02583
200.460	599.620	-.14227	.09850	-.02794	-.03877	-.01110	.00031	.42116	.35837	-.02657
200.560	800.350	-.14679	.09741	-.02923	-.03972	-.01140	.00031	.41922	.35779	-.02769
	GRADIENT	.00000	.00000	.00000	.00000	.00000	.00000	.00000	.00000	.00000

ORIGINAL PAGE IS OF POOR QUALITY

AEDC VA422(IA17) ORB AND ET SEPARATING(ET DATA) (ATR207) (24 JUL 75)

REFERENCE DATA

SREF = 2690.0000 SQ.FT. XMRP = 1360.1000 IN. XT
LREF = 1290.3000 IN. YMRP = .0000 IN. YT
BREF = 1290.3000 IN. ZMRP = 416.4000 IN. ZT
SCALE = .0100

PARAMETRIC DATA

DLT-Y = 60.000 ALPHA = .000
BETA = .000 DLTALF = -10.000
DLTBTA = 3.000 MACH = 5.930
AILRON = .000 ELEVON = .000
GRID = 1.000

RUN NO. 87/ 0 GRADIENT INTERVAL = -5.00/ 5.00

DLT-X	DLT-Z	CN	CA	CLM	CY	CYN	CBL	XCP/L	YCP/L	CPB
400.360	401.970	-.17414	.10651	-.00976	-.03828	-.00964	.00031	.51917	.38229	-.02420
400.420	500.030	-.15963	.10640	-.01510	-.03875	-.01098	.00034	.49226	.36029	-.02534
400.380	599.990	-.14385	.09877	-.02644	-.03924	-.01118	.00030	.42994	.35927	-.02610
400.450	800.170	-.14590	.09846	-.02888	-.03645	-.01112	.00031	.42004	.35637	-.02764
	GRADIENT	.00000	.00000	.00000	.00000	.00000	.00000	.00000	.00000	.00000

AEDC VA422(IA17) ORB AND ET SEPARATING(ET DATA) (ATR208) (24 JUL 75)

REFERENCE DATA

SREF = 2690.0000 SQ.FT. XMRP = 1360.1000 IN. XT
LREF = 1290.3000 IN. YMRP = .0000 IN. YT
BREF = 1290.3000 IN. ZMRP = 416.4000 IN. ZT
SCALE = .0100

PARAMETRIC DATA

DLT-Y = 60.000 ALPHA = .000
BETA = .000 DLTALF = -20.000
DLTBTA = 3.000 MACH = 5.930
AILRON = .000 ELEVON = .000
GRID = 1.000

RUN NO. 79/ 0 GRADIENT INTERVAL = -5.00/ 5.00

DLT-X	DLT-Z	CN	CA	CLM	CY	CYN	CBL	XCP/L	YCP/L	CPB
.518	802.140	-.34945	.12153	-.04052	-.04910	-.00793	.00026	.47734	.44547	-.02299
.469	1000.400	-.35070	.12167	-.03703	-.04747	-.00726	.00024	.48457	.45148	-.02497
	GRADIENT	.00000	.00000	.00000	.00000	.00000	.00000	.00000	.00000	.00000

RUN NO. 80/ 0 GRADIENT INTERVAL = -5.00/ 5.00

DLT-X	DLT-Z	CN	CA	CLM	CY	CYN	CBL	XCP/L	YCP/L	CPB
200.460	798.670	-.35444	.12126	-.03681	-.05067	-.00840	.00026	.48579	.44259	-.02236
200.430	1000.100	-.34974	.12201	-.03662	-.04711	-.00738	.00030	.48518	.44884	-.02490
	GRADIENT	.00000	.00000	.00000	.00000	.00000	.00000	.00000	.00000	.00000

RUN NO. 81/ 0 GRADIENT INTERVAL = -5.00/ 5.00

DLT-X	DLT-Z	CN	CA	CLM	CY	CYN	CBL	XCP/L	YCP/L	CPB
400.450	800.420	-.36204	.12586	-.03127	-.04952	-.00856	.00018	.49799	.43759	-.02363
400.470	1000.300	-.34929	.12199	-.03683	-.04817	-.00769	.00030	.48467	.44686	-.02506
	GRADIENT	.00000	.00000	.00000	.00000	.00000	.00000	.00000	.00000	.00000

AEDC VA422(IA17) ORB AND ET SEPARATING(ET DATA) (ATR210) (24 JUL 75)

REFERENCE DATA

SREF = 2690.0000 SQ.FT. XMRP = 1360.1000 IN. XT
LREF = 1290.3000 IN. YMRP = .0000 IN. YT
BREF = 1290.3000 IN. ZMRP = 416.4000 IN. ZT
SCALE = .0100

PARAMETRIC DATA

DLT-Y = 60.000 ALPHA = .000
BETA = .000 DLTALF = -20.000
DLTBTA = 3.000 MACH = 5.930
AILRON = .000 ELEVON = .000
GRID = 26.000

RUN NO. 383/ 0 GRADIENT INTERVAL = -5.00/ 5.00

DLT-X	DLT-Z	CN	CA	CLM	CY	CYN	CBL	XCP/L	YCP/L	CPB
.475	802.090	-.34754	.12578	-.04036	-.04751	-.00752	.00029	.47722	.44771	.00000
.560	900.390	-.34673	.12492	-.03989	-.04695	-.00701	.00026	.47797	.45397	.00000
.466	1000.300	-.34862	.12588	-.03703	-.04619	-.00661	.00026	.48413	.45838	.00000
	GRADIENT	.00000	.00000	.00000	.00000	.00000	.00000	.00000	.00000	.00000

RUN NO. 376/ 0 GRADIENT INTERVAL = -5.00/ 5.00

DLT-X	DLT-Z	CN	CA	CLM	CY	CYN	CBL	XCP/L	YCP/L	CPB
200.400	751.060	-.36374	.13203	-.03065	-.04744	-.00798	.00025	.49947	.44082	.00000
200.540	800.420	-.35331	.12548	-.03711	-.04805	-.00748	.00030	.48496	.44960	.00000
200.590	900.480	-.34913	.12781	-.03887	-.04664	-.00729	.00030	.48057	.44910	.00000
200.530	1000.300	-.34944	.12760	-.03633	-.04619	-.00670	.00032	.48571	.45700	.00000
	GRADIENT	.00000	.00000	.00000	.00000	.00000	.00000	.00000	.00000	.00000

RUN NO. 377/ 0 GRADIENT INTERVAL = -5.00/ 5.00

DLT-X	DLT-Z	CN	CA	CLM	CY	CYN	CBL	XCP/L	YCP/L	CPB
400.500	749.510	-.37128	.13727	-.02547	-.04694	-.00834	.00039	.51041	.43420	.00000
400.440	800.350	-.36233	.13146	-.03153	-.04695	-.00759	.00025	.49755	.44541	.00000
400.450	900.360	-.34838	.12687	-.03831	-.04669	-.00702	.00031	.48151	.45329	.00000
400.440	1000.300	-.34913	.12680	-.03653	-.04756	-.00700	.00034	.48524	.45556	.00000
	GRADIENT	.00000	.00000	.00000	.00000	.00000	.00000	.00000	.00000	.00000

AEDC VA422(IA17) ORB AND ET SEPARATING(ET DATA) (ATR211) (24 JUL 75)

REFERENCE DATA

SREF = 2690.0000 SQ.FT. XMRP = 1360.1000 IN. XT
LREF = 1290.3000 IN. YMRP = .0000 IN. YT
BREF = 1290.3000 IN. ZMRP = 416.4000 IN. ZT
SCALE = .0100

PARAMETRIC DATA

DLT-Y = 60.000 ALPHA = .000
BETA = 3.000 DLTALF = .000
DLTBTA = .000 MACH = 5.930
AILRON = .000 ELEVON = .000
GRID = 3.000

RUN NO. 114/ 0 GRADIENT INTERVAL = -5.00/ 5.00

DLT-X	DLT-Z	CN	CA	CLM	CY	CYN	CBL	XCP/L	YCP/L	CPB
.554	20.086	-.03898	.09370	.00741	-.04044	-.01015	.00044	.69107	.38304	.00000
.598	101.560	-.03465	.09396	.00800	-.03767	-.00989	.00044	.71960	.37494	.00000
.660	200.540	-.02318	.09660	.01143	-.03423	-.01181	.00026	.90284	.31725	.00000
.697	299.330	-.00792	.08969	.00176	-.03416	-.01150	.00033	.71373	.32308	.00000
.639	398.370	-.00780	.09064	.00187	-.03600	-.01215	.00034	.72543	.32259	.00000
.633	499.160	-.00758	.09109	.00198	-.03688	-.01277	.00035	.74119	.31640	.00000
.590	600.170	-.00895	.09096	.00154	-.03617	-.01287	.00035	.67892	.30981	.00000
	GRADIENT	.00000	.00000	.00000	.00000	.00000	.00000	.00000	.00000	.00000

RUN NO. 113/ 0 GRADIENT INTERVAL = -5.00/ 5.00

DLT-X	DLT-Z	CN	CA	CLM	CY	CYN	CBL	XCP/L	YCP/L	CPB
200.600	20.363	-.04340	.09445	-.00136	-.04177	-.01159	.00047	.53648	.36445	.00000
200.550	100.950	-.03719	.09518	.00863	-.03993	-.00963	.00042	.72051	.38990	.00000
200.550	201.540	-.02555	.09509	.01159	-.03449	-.01144	.00027	.87530	.32663	.00000
200.610	301.890	-.01092	.09111	.00374	-.03486	-.01206	.00030	.79769	.31660	.00000
200.560	400.390	-.00767	.09032	.00192	-.03552	-.01212	.00033	.73316	.32003	.00000
200.620	500.170	-.00817	.09103	.00204	-.03568	-.01259	.00035	.73313	.31194	.00000
200.590	600.160	-.00850	.09083	.00150	-.03576	-.01301	.00034	.68188	.30412	.00000
	GRADIENT	.00000	.00000	.00000	.00000	.00000	.00000	.00000	.00000	.00000

AEDC VA422(IA17) ORB AND ET SEPARATING(ET DATA) (ATR212) (24 JUL 75)

REFERENCE DATA

SREF = 2690.0000 SQ.FT. XMRP = 1360.1000 IN. XT
LREF = 1290.3000 IN. YMRP = .0000 IN. YT
BREF = 1290.3000 IN. ZMRP = 416.4000 IN. ZT
SCALE = .0100

PARAMETRIC DATA

DLT-Y = 60.000 ALPHA = .000
BETA = 3.000 DLTALF = -10.000
DLTBTA = .000 MACH = 5.930
AILRON = .000 ELEVON = .000
GRID = 3.000

RUN NO. 122/ 0 GRADIENT INTERVAL = -5.00/ 5.00

DLT-X	DLT-Z	CN	CA	CLM	CY	CYN	CBL	XCP/L	YCP/L	CPB
.462	402.160	-.16511	.11198	-.01203	-.03611	-.00925	.00028	.50743	.37930	.00000
.517	496.980	-.14487	.10152	-.02375	-.03748	-.00977	.00033	.44382	.37628	.00000
.549	598.330	-.14013	.10162	-.02716	-.03875	-.01038	.00035	.42295	.37128	.00000
.634	750.010	-.14354	.10241	-.02748	-.03859	-.01054	.00035	.42461	.36746	.00000
.656	800.140	-.14359	.10287	-.02729	-.03773	-.01021	.00034	.42555	.36921	.00000
	GRADIENT	.00000	.00000	.00000	.00000	.00000	.00000	.00000	.00000	.00000

RUN NO. 121/ 0 GRADIENT INTERVAL = -5.00/ 5.00

DLT-X	DLT-Z	CN	CA	CLM	CY	CYN	CBL	XCP/L	YCP/L	CPB
200.550	402.990	-.16905	.11078	-.01169	-.03778	-.00848	.00027	.51005	.40152	.00000
200.430	500.740	-.15355	.10770	-.01932	-.03682	-.01013	.00038	.47046	.36622	.00000
200.480	600.150	-.14142	.10206	-.02747	-.03909	-.01078	.00034	.42265	.36564	.00000
200.470	750.120	-.14373	.10256	-.02759	-.03836	-.01083	.00035	.42421	.36103	.00000
200.480	800.170	-.14488	.10195	-.02743	-.03763	-.01060	.00034	.42606	.36160	.00000
	GRADIENT	.00000	.00000	.00000	.00000	.00000	.00000	.00000	.00000	.00000

RUN NO. 120/ 0 GRADIENT INTERVAL = -5.00/ 5.00

DLT-X	DLT-Z	CN	CA	CLM	CY	CYN	CBL	XCP/L	YCP/L	CPB
400.530	400.290	-.17244	.11107	-.01135	-.03881	-.00845	.00038	.51234	.40629	.00000
400.530	498.510	-.15993	.11083	-.01526	-.03796	-.01023	.00035	.49167	.37001	.00000
400.520	600.220	-.14503	.10129	-.02580	-.03851	-.01053	.00033	.43405	.36726	.00000
400.530	750.140	-.14387	.10227	-.02767	-.03756	-.01080	.00033	.42395	.35744	.00000
400.560	800.160	-.14344	.10217	-.02773	-.03689	-.01057	.00031	.42327	.35819	.00000
	GRADIENT	.00000	.00000	.00000	.00000	.00000	.00000	.00000	.00000	.00000

AEDC VA422(IA17) ORB AND ET SEPARATING(ET DATA) (ATR214) (24 JUL 75)

REFERENCE DATA

SREF = 2690.0000 SQ.FT. XMRP = 1360.1000 IN. XT
LREF = 1290.3000 IN. YMRP = .0000 IN. YT
BREF = 1290.3000 IN. ZMRP = 416.4000 IN. ZT
SCALE = .0100

PARAMETRIC DATA

DLT-Y = 60.000 ALPHA = .000
BETA = 3.000 DLTALF = -20.000
DLTBTA = .000 MACH = 5.930
AILRON = .000 ELEVON = .000
GRID = 3.000

RUN NO. 131/ 0 GRADIENT INTERVAL = -5.00/ 5.00

DLT-X	DLT-Z	CN	CA	CLM	CY	CYN	CBL	XCP/L	YCP/L	CPB
.443	800.230	-.34319	.12543	-.03798	-.04986	-.00765	.00027	.48104	.45116	.00000
.579	898.760	-.34536	.12688	-.03691	-.05103	-.00743	.00030	.48368	.45665	.00000
.550	1000.200	-.34587	.12701	-.03591	-.04897	-.00665	.00032	.48581	.46345	.00000
	GRADIENT	.00000	.00000	.00000	.00000	.00000	.00000	.00000	.00000	.00000

RUN NO. 129/ 0 GRADIENT INTERVAL = -5.00/ 5.00

DLT-X	DLT-Z	CN	CA	CLM	CY	CYN	CBL	XCP/L	YCP/L	CPB
200.490	751.250	-.36124	.13123	-.02731	-.04932	-.00775	.00029	.50552	.44861	.00000
200.550	799.670	-.35027	.12545	-.03355	-.05065	-.00739	.00027	.49142	.45645	.00000
200.530	900.360	-.34604	.12733	-.03662	-.04856	-.00733	.00031	.48442	.45295	.00000
200.550	1000.300	-.34594	.12735	-.03606	-.04919	-.00691	.00028	.48551	.46014	.00000
	GRADIENT	.00000	.00000	.00000	.00000	.00000	.00000	.00000	.00000	.00000

RUN NO. 128/ 0 GRADIENT INTERVAL = -5.00/ 5.00

DLT-X	DLT-Z	CN	CA	CLM	CY	CYN	CBL	XCP/L	YCP/L	CPB
400.390	750.330	-.36901	.13577	-.02212	-.04870	-.00832	.00043	.51645	.43896	.00000
400.430	800.280	-.35867	.12999	-.02871	-.04950	-.00747	.00027	.50242	.45293	.00000
400.440	900.360	-.34434	.12639	-.03743	-.04868	-.00713	.00024	.48240	.45601	.00000
400.420	1000.300	-.34497	.12599	-.03712	-.04831	-.00678	.00024	.48318	.46031	.00000
	GRADIENT	.00000	.00000	.00000	.00000	.00000	.00000	.00000	.00000	.00000

AEDC VA422(IA17) ORB AND ET SEPARATING(ET DATA) (ATR215) (24 JUL 75)

REFERENCE DATA

SREF = 2690.0000 SQ.FT. XMRP = 1360.1000 IN. XT
LREF = 1290.3000 IN. YMRP = .0000 IN. YT
BREF = 1290.3000 IN. ZMRP = 416.4000 IN. ZT
SCALE = .0100

PARAMETRIC DATA

DLT-Y = 60.000 ALPHA = .000
BETA = 3.000 DLTALF = .000
DLTBTA = 3.000 MACH = 5.930
AILRON = .000 ELEVON = .000
GRID = 3.000

RUN NO. 156/ 0 GRADIENT INTERVAL = -5.00/ 5.00

DLT-X	DLT-Z	CN	CA	CLM	CY	CYN	CBL	XCP/L	YCP/L	CPB
.647	18.811	-.04562	.09716	.00924	-.07751	-.01909	.00074	.69989	.38627	.00000
.618	99.381	-.03716	.09501	.00804	-.07317	-.01937	.00071	.70947	.37339	.00000
.700	200.830	-.02086	.09561	.00811	-.07054	-.02252	.00041	.82985	.33528	.00000
.726	302.140	-.00928	.09073	.00068	-.07240	-.02168	.00059	.60925	.34912	.00000
.640	401.070	-.00914	.09167	.00105	-.07383	-.02200	.00059	.63857	.35013	.00000
.634	500.180	-.00930	.09207	.00124	-.07375	-.02278	.00059	.65151	.34251	.00000
.873	596.970	-.00996	.09277	.00070	-.07591	-.02362	.00061	.60710	.34096	.00000
	GRADIENT	.00000	.00000	.00000	.00000	.00000	.00000	.00000	.00000	.00000

RUN NO. 157/ 0 GRADIENT INTERVAL = -5.00/ 5.00

DLT-X	DLT-Z	CN	CA	CLM	CY	CYN	CBL	XCP/L	YCP/L	CPB
200.660	23.085	-.05191	.09618	-.00097	-.08077	-.01942	.00076	.54523	.39038	.00000
200.520	99.783	-.04118	.09679	.00900	-.07611	-.01893	.00072	.71109	.38458	.00000
200.590	199.350	-.02485	.09612	.01002	-.06993	-.02242	.00042	.83995	.33431	.00000
200.630	298.540	-.01072	.09095	.00229	-.07068	-.02145	.00055	.70755	.34634	.00000
200.580	398.180	-.00886	.09152	.00133	-.07324	-.02209	.00060	.66297	.34762	.00000
200.620	499.790	-.00985	.09225	.00128	-.07349	-.02299	.00059	.64893	.33979	.00000
200.660	600.100	-.01096	.09233	.00063	-.07472	-.02365	.00061	.59837	.33718	.00000
	GRADIENT	.00000	.00000	.00000	.00000	.00000	.00000	.00000	.00000	.00000

ORIGINAL PAGE IS OF POOR QUALITY

AEDC VA422(IA17) ORB AND ET SEPARATING(ET DATA) (ATR216) (24 JUL 75)

REFERENCE DATA

SREF = 2690.0000 SQ.FT. XMRP = 1360.1000 IN. XT
LREF = 1290.3000 IN. YMRP = .0000 IN. YT
BREF = 1290.3000 IN. ZMRP = 416.4000 IN. ZT
SCALE = .0100

PARAMETRIC DATA

DLT-Y = 60.000 ALPHA = .000
BETA = 3.000 DLTALF = -10.000
DLTBTA = 3.000 MACH = 5.930
AILRON = .000 ELEVON = .000
GRID = 3.000

RUN NO. 150/ 0 GRADIENT INTERVAL = -5.00/ 5.00

DLT-X	DLT-Z	CN	CA	CLM	CY	CYN	CBL	XCP/L	YCP/L	CPB
.532	403.820	-.17078	.11125	-.01162	-.07708	-.01950	.00050	.51081	.38164	.00000
.454	502.010	-.14944	.10239	-.02477	-.07933	-.02036	.00052	.44252	.37905	.00000
.486	600.240	-.14713	.10318	-.02695	-.08110	-.02056	.00060	.43039	.38126	.00000
.471	750.100	-.14981	.10297	-.02721	-.08162	-.02061	.00059	.43143	.38196	.00000
.146	801.950	-.15105	.10261	-.02695	-.08188	-.02072	.00059	.43371	.38159	.00000
	GRADIENT	.00000	.00000	.00000	.00000	.00000	.00000	.00000	.00000	.00000

RUN NO. 151/ 0 GRADIENT INTERVAL = -5.00/ 5.00

DLT-X	DLT-Z	CN	CA	CLM	CY	CYN	CBL	XCP/L	YCP/L	CPB
200.510	398.380	-.17614	.11018	-.00895	-.08056	-.01866	.00053	.52284	.39656	.00000
200.510	497.270	-.15733	.10611	-.01938	-.08005	-.02020	.00044	.47229	.38200	.00000
200.540	599.410	-.14766	.10217	-.02688	-.08166	-.02092	.00060	.43115	.37936	.00000
200.550	750.090	-.14939	.10267	-.02735	-.08143	-.02094	.00060	.43046	.37865	.00000
200.540	800.160	-.14928	.10212	-.02733	-.08063	-.02072	.00058	.43043	.37884	.00000
	GRADIENT	.00000	.00000	.00000	.00000	.00000	.00000	.00000	.00000	.00000

RUN NO. 152/ 0 GRADIENT INTERVAL = -5.00/ 5.00

DLT-X	DLT-Z	CN	CA	CLM	CY	CYN	CBL	XCP/L	YCP/L	CPB
400.500	402.090	-.18027	.11304	-.00899	-.08250	-.01821	.00071	.52349	.40415	.00000
400.560	500.180	-.16488	.11092	-.01529	-.08028	-.02039	.00052	.49357	.38096	.00000
400.450	600.100	-.14749	.10233	-.02592	-.08173	-.02126	.00056	.43554	.37665	.00000
400.520	750.020	-.14872	.10230	-.02757	-.07966	-.02071	.00059	.42884	.37669	.00000
400.480	800.130	-.14935	.10257	-.02740	-.08083	-.02064	.00058	.43018	.37998	.00000
	GRADIENT	.00000	.00000	.00000	.00000	.00000	.00000	.00000	.00000	.00000

AEDC VA422(IA17) ORB AND ET SEPARATING(ET DATA) (ATR218) (24 JUL 75)

REFERENCE DATA

SREF = 2690.0000 SQ.FT. XMRP = 1360.1000 IN. XT
LREF = 1290.3000 IN. YMRP = .0000 IN. YT
BREF = 1290.3000 IN. ZMRP = 416.4000 IN. ZT
SCALE = .0100

PARAMETRIC DATA

DLT-Y = 60.000 ALPHA = .000
BETA = 3.000 DLTALF = -20.000
DLTBTA = 3.000 MACH = 5.930
AILRON = .000 ELEVON = .000
GRID = 3.000

RUN NO. 138/ 0 GRADIENT INTERVAL = -5.00/ 5.00

DLT-X	DLT-Z	CN	CA	CLM	CY	CYN	CBL	XCP/L	YCP/L	CPB
.529	801.890	-.35270	.12846	-.03510	-.09995	-.01582	.00068	.48882	.44777	.00000
.506	900.430	-.35483	.12939	-.03400	-.10002	-.01511	.00073	.49139	.45282	.00000
.470	1000.300	-.35659	.12902	-.03297	-.09814	-.01453	.00066	.49374	.45492	.00000
	GRADIENT	.00000	.00000	.00000	.00000	.00000	.00000	.00000	.00000	.00000

RUN NO. 132/ 0 GRADIENT INTERVAL = -5.00/ 5.00

DLT-X	DLT-Z	CN	CA	CLM	CY	CYN	CBL	XCP/L	YCP/L	CPB
200.550	751.100	-.36806	.13278	-.02550	-.10147	-.01589	.00048	.50994	.44892	.00000
200.470	800.490	-.35825	.12851	-.03140	-.10064	-.01598	.00064	.49711	.44742	.00000
200.490	900.350	-.35345	.12920	-.03418	-.09857	-.01519	.00067	.49078	.45065	.00000
200.530	1000.300	-.35502	.12890	-.03374	-.09849	-.01461	.00066	.49194	.45468	.00000
	GRADIENT	.00000	.00000	.00000	.00000	.00000	.00000	.00000	.00000	.00000

RUN NO. 133/ 0 GRADIENT INTERVAL = -5.00/ 5.00

DLT-X	DLT-Z	CN	CA	CLM	CY	CYN	CBL	XCP/L	YCP/L	CPB
400.540	749.520	-.37907	.13986	-.01903	-.10280	-.01557	.00058	.52327	.45254	.00000
400.580	800.480	-.36792	.13197	-.02629	-.10186	-.01564	.00054	.50841	.45106	.00000
400.570	900.470	-.35409	.12866	-.03454	-.09840	-.01553	.00065	.49019	.44805	.00000
400.570	1000.300	-.35402	.12831	-.03416	-.09940	-.01476	.00071	.49092	.45459	.00000
	GRADIENT	.00000	.00000	.00000	.00000	.00000	.00000	.00000	.00000	.00000

AEDC VA422(IA17) ORB AND ET SEPARATING(ET DATA) (ATR219) (24 JUL 75)

REFERENCE DATA

SREF = 2690.0000 SQ.FT. XMRP = 1360.1000 IN. XT
LREF = 1290.3000 IN. YMRP = .0000 IN. YT
BREF = 1290.3000 IN. ZMRP = 416.4000 IN. ZT
SCALE = .0100

PARAMETRIC DATA

DLT-Y = 60.000 ALPHA = 5.000
BETA = .000 DLTALF = .000
DLTBTA = .000 MACH = 5.930
AILRON = .000 ELEVON = .000
GRID = 5.000

RUN NO. 204/ 0 GRADIENT INTERVAL = -5.00/ 5.00

DLT-X	DLT-Z	CN	CA	CLM	CY	CYN	CBL	XCP/L	YCP/L	CPB
.603	17.641	.01712	.09115	.02864	-.00296	.00081	.00003	-.61064	.00000	.00000
.533	101.180	.02134	.09277	.02881	-.00148	.00021	.00002	-.38474	.00000	.00000
.572	201.910	.03757	.08907	.02785	.00319	-.00005	.00015	.04046	.00000	.00000
.551	300.810	.05429	.08441	.01947	.00274	.00003	.00003	.30782	.00000	.00000
.643	399.630	.05534	.08502	.01944	.00184	-.00017	.00005	.31292	.00000	.00000
.737	498.180	.05523	.08539	.01931	.00169	-.00029	.00005	.31403	.00000	.00000
.722	598.810	.05574	.08554	.01994	.00119	-.00046	.00005	.30836	.00000	.00000
	GRADIENT	.00000	.00000	.00000	.00000	.00000	.00000	.00000	.00000	.00000

RUN NO. 203/ 0 GRADIENT INTERVAL = -5.00/ 5.00

DLT-X	DLT-Z	CN	CA	CLM	CY	CYN	CBL	XCP/L	YCP/L	CPB
200.600	19.121	.01203	.09282	.01990	-.00492	-.00141	.00012	-.59727	.35772	.00000
200.510	99.580	.01755	.09252	.02778	-.00172	.00084	.00007	-.54756	.00000	.00000
200.580	199.880	.03307	.09191	.03129	.00411	-.00023	.00017	-.10275	.59701	.00000
200.650	301.700	.05383	.08422	.01941	.00280	.00010	.00005	.30649	.00000	.00000
200.630	401.640	.05477	.08525	.01938	.00254	-.00006	.00002	.31110	.00000	.00000
200.660	500.290	.05503	.08517	.01928	.00192	-.00006	.00004	.31362	.00000	.00000
200.710	599.880	.05568	.08589	.02036	.00196	-.00032	.00004	.30285	.00000	.00000
	GRADIENT	.00000	.00000	.00000	.00000	.00000	.00000	.00000	.00000	.00000

RUN NO. 202/ 0 GRADIENT INTERVAL = -5.00/ 5.00

DLT-X	DLT-Z	CN	CA	CLM	CY	CYN	CBL	XCP/L	YCP/L	CPB
400.510	19.718	.00939	.09402	.01202	-.00460	-.00052	-.00003	-.33550	.47975	.00000
400.440	98.530	.01154	.09401	.02960	-.00020	.00131	.00004	-1.23400	.00000	.00000
400.510	199.860	.02407	.09609	.03602	.00337	-.00107	.00017	-.48697	.00000	.00000
400.500	299.120	.05344	.08353	.02039	.00239	.00001	.00005	.29182	.00000	.00000
400.430	397.910	.05486	.08466	.01959	.00213	-.00025	.00004	.30885	.00000	.00000
400.650	499.460	.05480	.08532	.01966	.00162	-.00028	.00005	.30772	.00000	.00000
400.630	599.820	.05518	.08621	.02066	.00180	-.00051	.00005	.29670	.00000	.00000
	GRADIENT	.00000	.00000	.00000	.00000	.00000	.00000	.00000	.00000	.00000

AEDC VA422(IA17) ORB AND ET SEPARATING(ET DATA) (ATR220) (24 JUL 75)

REFERENCE DATA

SREF = 2690.0000 SQ.FT. XMRP = 1360.1000 IN. XT
LREF = 1290.3000 IN. YMRP = .0000 IN. YT
BREF = 1290.3000 IN. ZMRP = 416.4000 IN. ZT
SCALE = .0100

PARAMETRIC DATA

DLT-Y = 60.000 ALPHA = 5.000
BETA = .000 DLTALF = -10.000
DLTBTA = .000 MACH = 5.930
AILRON = .000 ELEVON = .000
GRID = 5.000

RUN NO. 212/ 0 GRADIENT INTERVAL = -5.00/ 5.00

DLT-X	DLT-Z	CN	CA	CLM	CY	CYN	CBL	XCP/L	YCP/L	CPB
.445	400.760	-.08934	.09605	-.00110	.00486	.00039	.00024	.54976	.50175	.00000
.574	499.120	-.06547	.08930	-.01494	.00430	.00048	.00004	.39885	.00000	.00000
.472	597.590	-.06571	.09027	-.01529	.00435	.00056	.00002	.39575	.00000	.00000
.637	748.230	-.06388	.09298	-.01488	.00230	-.00009	.00005	.39584	.00000	.00000
.556	800.100	-.06516	.09277	-.01542	.00209	.00003	.00006	.39300	.00000	.00000
	GRADIENT	.00000	.00000	.00000	.00000	.00000	.00000	.00000	.00000	.00000

RUN NO. 211/ 0 GRADIENT INTERVAL = -5.00/ 5.00

DLT-X	DLT-Z	CN	CA	CLM	CY	CYN	CBL	XCP/L	YCP/L	CPB
200.490	402.490	-.10045	.09888	.00470	.00594	.00051	.00017	.59100	.49789	.00000
200.420	502.250	-.06723	.08907	-.01497	.00335	.00041	.00006	.40276	.00000	.00000
200.460	600.590	-.06694	.09062	-.01541	.00304	.00017	.00005	.39753	.00000	.00000
200.540	750.110	-.06517	.09200	-.01478	.00256	-.00023	.00005	.39995	.00000	.00000
200.520	800.070	-.06465	.09345	-.01520	.00279	-.00003	.00005	.39414	.00000	.00000
	GRADIENT	.00000	.00000	.00000	.00000	.00000	.00000	.00000	.00000	.00000

RUN NO. 210/ 0 GRADIENT INTERVAL = -5.00/ 5.00

DLT-X	DLT-Z	CN	CA	CLM	CY	CYN	CBL	XCP/L	YCP/L	CPB
400.510	400.230	-.11665	.10592	.01319	.00434	.00088	-.00002	.63735	.00000	.00000
400.580	497.520	-.07131	.08916	-.01268	.00368	.00065	.00007	.43407	.00000	.00000
400.480	599.120	-.06459	.09016	-.01502	.00323	.00031	.00004	.39584	.00000	.00000
400.670	750.150	-.06425	.09238	-.01478	.00181	-.00041	.00005	.39760	.00000	.00000
400.620	800.130	-.06562	.09348	-.01510	.00225	-.00031	.00006	.39762	.00000	.00000
	GRADIENT	.00000	.00000	.00000	.00000	.00000	.00000	.00000	.00000	.00000

ORIGINAL PAGE IS OF POOR QUALITY

AEDC VA422(IA17) ORB AND ET SEPARATING(ET DATA) (ATR222) (24 JUL 75)

REFERENCE DATA

SREF = 2690.0000 SQ.FT. XMRP = 1360.1000 IN. XT
LREF = 1290.3000 IN. YMRP = .0000 IN. YT
BREF = 1290.3000 IN. ZMRP = 416.4000 IN. ZT
SCALE = .0100

PARAMETRIC DATA

DLT-Y = 60.000 ALPHA = 5.000
BETA = .000 DLTALF = -20.000
DLTBTA = .000 MACH = 5.930
AILRON = .000 ELEVON = .000
GRID = 5.000

RUN NO. 221/ 0 GRADIENT INTERVAL = -5.00/ 5.00

DLT-X	DLT-Z	CN	CA	CLM	CY	CYN	CBL	XCP/L	YCP/L	CPB
.430	800.270	-.22565	.11022	-.03624	.00574	.00071	.00014	.44615	.47213	.00000
.468	899.140	-.22638	.11126	-.03787	.00608	.00038	.00011	.44147	.51448	.00000
.595	1000.400	-.22932	.11173	-.03823	.00358	.00045	.00014	.44186	.00000	.00000
	GRADIENT	.00000	.00000	.00000	.00000	.00000	.00000	.00000	.00000	.00000

RUN NO. 219/ 0 GRADIENT INTERVAL = -5.00/ 5.00

DLT-X	DLT-Z	CN	CA	CLM	CY	CYN	CBL	XCP/L	YCP/L	CPB
200.440	750.860	-.22597	.10893	-.03508	.00454	.00045	.00015	.44989	.00000	.00000
200.490	799.840	-.22518	.11025	-.03628	.00512	.00028	.00015	.44577	.00000	.00000
200.510	900.410	-.22879	.11156	-.03774	.00440	.00027	.00013	.44311	.00000	.00000
200.620	1000.300	-.22974	.11149	-.03876	.00342	.00032	.00017	.44049	.00000	.00000
	GRADIENT	.00000	.00000	.00000	.00000	.00000	.00000	.00000	.00000	.00000

RUN NO. 218/ 0 GRADIENT INTERVAL = -5.00/ 5.00

DLT-X	DLT-Z	CN	CA	CLM	CY	CYN	CBL	XCP/L	YCP/L	CPB
400.480	750.220	-.23055	.10921	-.03272	.00337	.00040	.00017	.45921	.00000	.00000
400.470	800.180	-.22613	.11000	-.03614	.00412	.00019	.00014	.44668	.00000	.00000
400.420	900.180	-.22813	.11191	-.03774	.00214	-.00021	.00017	.44278	.00000	.00000
400.540	1000.300	-.22985	.11147	-.03910	.00373	.00040	.00014	.43950	.00000	.00000
	GRADIENT	.00000	.00000	.00000	.00000	.00000	.00000	.00000	.00000	.00000

AEDC VA422(IA17) ORB AND ET SEPARATING(ET DATA) (ATR223) (24 JUL 75)

REFERENCE DATA

SREF = 2690.0000 SQ.FT. XMRP = 1360.1000 IN. XT
LREF = 1290.3000 IN. YMRP = .0000 IN. YT
BREF = 1290.3000 IN. ZMRP = 416.4000 IN. ZT
SCALE = .0100

PARAMETRIC DATA

DLT-Y = 60.000 ALPHA = 5.000
BETA = .000 DLTALF = .000
DLTBTA = 3.000 MACH = 5.930
AILRON = .000 ELEVON = .000
GRID = 5.000

RUN NO. 234/ 0 GRADIENT INTERVAL = -5.00/ 5.00

DLT-X	DLT-Z	CN	CA	CLM	CY	CYN	CBL	XCP/L	YCP/L	CPB
.576	19.297	.01396	.09152	.02777	-.03517	-.00984	.00048	-.83155	.36297	.00000
.590	97.867	.02416	.08999	.02626	-.03246	-.01041	.00043	-.20128	.33421	.00000
.646	199.160	.03674	.09052	.02734	-.03327	-.01168	.00012	.03837	.31312	.00000
.661	300.190	.05297	.08612	.01884	-.03362	-.01069	.00034	.30983	.33620	.00000
.638	402.060	.05298	.08677	.01866	-.03440	-.01090	.00034	.31234	.33696	.00000
.712	501.230	.05273	.08740	.01851	-.03589	-.01108	.00036	.31315	.34259	.00000
.660	598.490	.05403	.08814	.01935	-.03613	-.01110	.00037	.30819	.34365	.00000
	GRADIENT	.00000	.00000	.00000	.00000	.00000	.00000	.00000	.00000	.00000

RUN NO. 235/ 0 GRADIENT INTERVAL = -5.00/ 5.00

DLT-X	DLT-Z	CN	CA	CLM	CY	CYN	CBL	XCP/L	YCP/L	CPB
200.560	22.412	.01083	.09147	.01694	-.04045	-.01054	.00045	-.53492	.37638	.00000
200.510	101.040	.01622	.09115	.02572	-.03366	-.00956	.00044	-.54951	.36002	.00000
200.600	200.480	.03179	.09216	.02929	-.03315	-.01211	.00011	-.08538	.30320	.00000
200.610	300.260	.05233	.08544	.01908	-.03358	-.01077	.00034	.30359	.33425	.00000
200.650	398.270	.05333	.08653	.01895	-.03554	-.01115	.00035	.31010	.33905	.00000
200.700	498.390	.05310	.08680	.01900	-.03575	-.01090	.00036	.30837	.34537	.00000
200.580	599.610	.05384	.08733	.01982	-.03639	-.01128	.00036	.30111	.34179	.00000
	GRADIENT	.00000	.00000	.00000	.00000	.00000	.00000	.00000	.00000	.00000

ORIGINAL PAGE IS OF POOR QUALITY

AEDC VA422(IA17) ORB AND ET SEPARATING(ET DATA) (ATR224) (24 JUL 75)

REFERENCE DATA

SREF = 2690.0000 SQ.FT. XMRP = 1360.1000 IN. XT
LREF = 1290.3000 IN. YMRP = .0000 IN. YT
BREF = 1290.3000 IN. ZMRP = 416.4000 IN. ZT
SCALE = .0100

PARAMETRIC DATA

DLT-Y = 60.000 ALPHA = 5.000
BETA = .000 DLTALF = -10.000
DLTBTA = 3.000 MACH = 5.930
AILRON = .000 ELEVON = .000
GRID = 5.000

RUN NO. 228/ 0 GRADIENT INTERVAL = -5.00/ 5.00

DLT-X	DLT-Z	CN	CA	CLM	CY	CYN	CBL	XCP/L	YCP/L	CPB
.508	401.240	-.09141	.09940	.00064	-.03242	-.01144	.00017	.56322	.31188	.00000
.457	502.820	-.06784	.09194	-.01411	-.03267	-.01088	.00030	.41305	.32561	.00000
.504	601.900	-.06766	.09223	-.01448	-.03200	-.01086	.00030	.40880	.32125	.00000
.555	749.970	-.06554	.09514	-.01358	-.03296	-.01111	.00031	.41362	.32284	.00000
-.568	803.080	-.06687	.09615	-.01424	-.03389	-.01138	.00030	.40962	.32370	.00000
	GRADIENT	.00000	.00000	.00000	.00000	.00000	.00000	.00000	.00000	.00000

RUN NO. 229/ 0 GRADIENT INTERVAL = -5.00/ 5.00

DLT-X	DLT-Z	CN	CA	CLM	CY	CYN	CBL	XCP/L	YCP/L	CPB
200.560	399.810	-.10624	.10287	.00871	-.03088	-.01174	.00019	.61562	.29271	.00000
200.490	497.890	-.06863	.09035	-.01332	-.03221	-.01075	.00027	.42271	.32515	.00000
200.560	597.760	-.06479	.09184	-.01419	-.03218	-.01086	.00031	.40534	.32248	.00000
200.550	749.640	-.06549	.09466	-.01326	-.03293	-.01115	.00031	.41688	.32171	.00000
200.610	800.150	-.06594	.09569	-.01371	-.03312	-.01118	.00033	.41313	.32261	.00000
	GRADIENT	.00000	.00000	.00000	.00000	.00000	.00000	.00000	.00000	.00000

RUN NO. 230/ 0 GRADIENT INTERVAL = -5.00/ 5.00

DLT-X	DLT-Z	CN	CA	CLM	CY	CYN	CBL	XCP/L	YCP/L	CPB
400.430	402.750	-.11886	.10574	.01367	-.03213	-.01092	.00009	.63871	.32082	.00000
400.540	501.050	-.07171	.09197	-.01112	-.03174	-.01107	.00025	.45000	.31470	.00000
400.540	600.240	-.06702	.09241	-.01374	-.03255	-.01085	.00031	.41507	.32554	.00000
400.540	750.070	-.06548	.09491	-.01316	-.03321	-.01127	.00033	.41791	.32126	.00000
400.520	800.070	-.06576	.09581	-.01340	-.03395	-.01149	.00032	.41604	.32185	.00000
	GRADIENT	.00000	.00000	.00000	.00000	.00000	.00000	.00000	.00000	.00000

AEDC VA422(IA17) ORB AND ET SEPARATING(ET DATA) (ATR226) (24 JUL 75)

REFERENCE DATA

SREF = 2690.0000 SQ.FT. XMRP = 1380.1000 IN. XT
LREF = 1290.3000 IN. YMRP = .0000 IN. YT
BREF = 1290.3000 IN. ZMRP = 416.4000 IN. ZT
SCALE = .0100

PARAMETRIC DATA

DLT-Y = 80.000 ALPHA = 5.000
BETA = .000 DLTALF = -20.000
DLTBTA = 3.000 MACH = 5.930
AILRON = .000 ELEVON = .000
GRID = 5.000

RUN NO. 226/ 0 GRADIENT INTERVAL = -5.00/ 5.00

DLT-X	DLT-Z	CN	CA	CLM	CY	CYN	CBL	XCP/L	YCP/L	CPB
.436	801.370	-.22970	.11193	-.03484	-.03967	-.00861	.00031	.45238	.40670	.00000
.590	900.260	-.23170	.11294	-.03655	-.03823	-.00867	.00030	.44814	.39983	.00000
.513	1000.200	-.23488	.11319	-.03698	-.04224	-.00871	.00034	.44834	.41421	.00000
	GRADIENT	.00000	.00000	.00000	.00000	.00000	.00000	.00000	.00000	.00000

RUN NO. 222/ 0 GRADIENT INTERVAL = -5.00/ 5.00

DLT-X	DLT-Z	CN	CA	CLM	CY	CYN	CBL	XCP/L	YCP/L	CPB
200.440	750.800	-.22928	.11112	-.03370	-.04137	-.00868	.00030	.45567	.41178	.00000
200.390	800.230	-.22999	.11152	-.03482	-.04030	-.00897	.00032	.45257	.40287	.00000
200.470	900.270	-.23052	.11303	-.03651	-.04053	-.00885	.00033	.44771	.40576	.00000
200.550	1000.100	-.23339	.11345	-.03753	-.04215	-.00917	.00033	.44600	.40632	.00000
	GRADIENT	.00000	.00000	.00000	.00000	.00000	.00000	.00000	.00000	.00000

RUN NO. 223/ 0 GRADIENT INTERVAL = -5.00/ 5.00

DLT-X	DLT-Z	CN	CA	CLM	CY	CYN	CBL	XCP/L	YCP/L	CPB
400.440	749.710	-.23456	.11006	-.03098	-.04144	-.00903	.00030	.46606	.40605	.00000
400.540	800.360	-.22976	.11126	-.03462	-.04143	-.00926	.00032	.45306	.40221	.00000
400.730	900.460	-.23136	.11308	-.03637	-.04386	-.00950	.00037	.44850	.40699	.00000
400.550	1000.500	-.23520	.11319	-.03765	-.04320	-.00952	.00034	.44651	.40435	.00000
	GRADIENT	.00000	.00000	.00000	.00000	.00000	.00000	.00000	.00000	.00000

ORIGINAL PAGE IS OF POOR QUALITY

AEDC VA422(IA17) ORB AND ET SEPARATING(ET DATA) (ATR227) (24 JUL 75)

REFERENCE DATA

SREF = 2690.0000 SQ.FT. XMRP = 1360.1000 IN. XT
LREF = 1290.3000 IN. YMRP = .0000 IN. YT
BREF = 1290.3000 IN. ZMRP = 418.4000 IN. ZT
SCALE = .0100

PARAMETRIC DATA

DLT-Y = 60.000 ALPHA = 5.000
BETA = 3.000 DLTALF = .000
DLTBTA = .000 MACH = 5.930
AILRON = .000 ELEVON = .000
GRID = 4.000

RUN NO. 164/ 0 GRADIENT INTERVAL = -5.00/ 5.00

DLT-X	DLT-Z	CN	CA	CLM	CY	CYN	CBL	XCP/L	YCP/L	CPB
.673	17.677	.01719	.09343	.02728	-.03371	-.00923	.00053	-.55004	.36708	.00000
.675	101.010	.02328	.09218	.02599	-.03103	-.00987	.00045	-.22167	.33619	.00000
.601	202.160	.03653	.09199	.02662	-.03242	-.01134	.00012	.04920	.31395	.00000
.680	300.800	.05314	.08763	.01895	-.03386	-.01055	.00034	.30920	.34076	.00000
.704	399.540	.05424	.08849	.01889	-.03453	-.01065	.00034	.31499	.34286	.00000
.676	497.920	.05480	.08863	.01875	-.03475	-.01045	.00035	.31931	.34829	.00000
.799	599.020	.05321	.08871	.01904	-.03486	-.01055	.00035	.30829	.34685	.00000
	GRADIENT	.00000	.00000	.00000	.00000	.00000	.00000	.00000	.00000	.00000

RUN NO. 163/ 0 GRADIENT INTERVAL = -5.00/ 5.00

DLT-X	DLT-Z	CN	CA	CLM	CY	CYN	CBL	XCP/L	YCP/L	CPB
200.530	18.918	.01201	.09300	.01720	-.03645	-.00869	.00052	-.44272	.39168	.00000
200.670	99.616	.01706	.09304	.02573	-.03289	-.00922	.00048	-.49547	.36248	.00000
200.650	199.790	.03273	.09402	.02974	-.03147	-.01143	.00011	-.07645	.30467	.00000
200.710	301.960	.05172	.08738	.01892	-.03436	-.01068	.00034	.30268	.34128	.00000
200.670	401.470	.05374	.08821	.01875	-.03472	-.01077	.00034	.31453	.34151	.00000
200.670	500.240	.05349	.08858	.01876	-.03490	-.01062	.00035	.31336	.34582	.00000
200.790	600.070	.05339	.08905	.01910	-.03502	-.01099	.00036	.30836	.33908	.00000
	GRADIENT	.00000	.00000	.00000	.00000	.00000	.00000	.00000	.00000	.00000

AEDC VA422(IA17) ORB AND ET SEPARATING(ET DATA) (ATR228) (24 JUL 75)

REFERENCE DATA

SREF = 2690.0000 SQ.FT. XMRP = 1360.1000 IN. XT
LREF = 1290.3000 IN. YMRP = .0000 IN. YT
BREF = 1290.3000 IN. ZMRP = 416.4000 IN. ZT
SCALE = .0100

PARAMETRIC DATA

DLT-Y = 60.000 ALPHA = 5.000
BETA = 3.000 DLTALF = -10.000
DLTBTA = .000 MACH = 5.930
AILRON = .000 ELEVON = .000
GRID = 4.000

RUN NO. 172/ 0 GRADIENT INTERVAL = -5.00/ 5.00

DLT-X	DLT-Z	CN	CA	CLM	CY	CYN	CBL	XCP/L	YCP/L	CPB
.666	400.870	-.09142	.09921	.00026	-.03089	-.01083	.00021	.56036	.31335	.00000
.677	498.780	-.06722	.09324	-.01371	-.03129	-.01058	.00029	.41588	.32205	.00000
.646	597.400	-.06599	.09310	-.01423	-.03264	-.01076	.00031	.40768	.32799	.00000
.553	748.390	-.06670	.09460	-.01393	-.03327	-.01126	.00032	.41241	.32192	.00000
.669	800.040	-.06603	.09505	-.01409	-.03416	-.01143	.00032	.40928	.32482	.00000
	GRADIENT	.00000	.00000	.00000	.00000	.00000	.00000	.00000	.00000	.00000

RUN NO. 171/ 0 GRADIENT INTERVAL = -5.00/ 5.00

DLT-X	DLT-Z	CN	CA	CLM	CY	CYN	CBL	XCP/L	YCP/L	CPB
200.500	402.860	-.10095	.10281	.00610	-.03119	-.01080	.00020	.60057	.31632	.00000
200.480	502.110	-.06776	.09268	-.01350	-.03208	-.01074	.00028	.41919	.32444	.00000
200.500	600.510	-.06617	.09374	-.01423	-.03280	-.01080	.00030	.40812	.32817	.00000
200.630	750.150	-.06660	.09461	-.01387	-.03485	-.01173	.00033	.41283	.32317	.00000
200.690	800.110	-.06738	.09511	-.01398	-.03452	-.01188	.00033	.41336	.31785	.00000
	GRADIENT	.00000	.00000	.00000	.00000	.00000	.00000	.00000	.00000	.00000

RUN NO. 170/ 0 GRADIENT INTERVAL = -5.00/ 5.00

DLT-X	DLT-Z	CN	CA	CLM	CY	CYN	CBL	XCP/L	YCP/L	CPB
400.570	400.040	-.11664	.10818	.01408	-.03029	-.01095	.00020	.64269	.30580	.00000
400.520	497.640	-.07054	.09329	-.01122	-.03096	-.01089	.00025	.44726	.31262	.00000
400.590	599.210	-.06736	.09362	-.01412	-.03249	-.01073	.00031	.41188	.32765	.00000
400.640	750.020	-.06650	.09482	-.01387	-.03426	-.01166	.00033	.41262	.32058	.00000
400.710	800.100	-.06675	.09588	-.01399	-.03484	-.01211	.00032	.41191	.31551	.00000
	GRADIENT	.00000	.00000	.00000	.00000	.00000	.00000	.00000	.00000	.00000

AEDC VA422(IA17) ORB AND ET SEPARATING(ET DATA) (ATR230) (24 JUL 75)

REFERENCE DATA

SREF = 2690.0000 SQ.FT. XMRP = 1360.1000 IN. XT
LREF = 1290.3000 IN. YMRP = .0000 IN. YT
BREF = 1290.3000 IN. ZMRP = 416.4000 IN. ZT
SCALE = .0100

PARAMETRIC DATA

DLT-Y = 60.000 ALPHA = 5.000
BETA = 3.000 DLTALF = -20.000
DLTBTA = .000 MACH = 5.930
AILRON = .000 ELEVON = .000
GRID = 4.000

RUN NO. 181/ 0 GRADIENT INTERVAL = -5.00/ 5.00

DLT-X	DLT-Z	CN	CA	CLM	CY	CYN	CBL	XCP/L	YCP/L	CPB
.556	800.230	-.22825	.11139	-.03446	-.03993	-.00848	.00032	.45287	.41000	.00000
.601	899.210	-.22971	.11224	-.03538	-.04154	-.00936	.00032	.45074	.40094	.00000
.643	1000.300	-.23108	.11228	-.03577	-.04355	-.00924	.00034	.45020	.41013	.00000
	GRADIENT	.00000	.00000	.00000	.00000	.00000	.00000	.00000	.00000	.00000

RUN NO. 179/ 0 GRADIENT INTERVAL = -5.00/ 5.00

DLT-X	DLT-Z	CN	CA	CLM	CY	CYN	CBL	XCP/L	YCP/L	CPB
200.620	750.870	-.22946	.11107	-.03364	-.03955	-.00808	.00030	.45591	.41558	.00000
200.510	799.870	-.22926	.11169	-.03425	-.04053	-.00892	.00033	.45397	.40461	.00000
200.620	900.290	-.22986	.11236	-.03545	-.04190	-.00941	.00034	.45060	.40146	.00000
200.650	1000.400	-.23102	.11223	-.03596	-.04314	-.00936	.00034	.44961	.40676	.00000
	GRADIENT	.00000	.00000	.00000	.00000	.00000	.00000	.00000	.00000	.00000

RUN NO. 178/ 0 GRADIENT INTERVAL = -5.00/ 5.00

DLT-X	DLT-Z	CN	CA	CLM	CY	CYN	CBL	XCP/L	YCP/L	CPB
400.480	750.220	-.23388	.11032	-.03104	-.04069	-.00909	.00027	.46562	.40233	.00000
400.560	800.220	-.22861	.11131	-.03427	-.04187	-.00918	.00033	.45361	.40511	.00000
400.460	900.200	-.23034	.11266	-.03541	-.04391	-.00978	.00035	.45094	.40274	.00000
400.620	1000.300	-.23256	.11210	-.03604	-.04356	-.00943	.00033	.45006	.40712	.00000
	GRADIENT	.00000	.00000	.00000	.00000	.00000	.00000	.00000	.00000	.00000

AEDC VA422(IA17) ORB AND ET SEPARATING(ET DATA) (ATR231) (24 JUL 75)

REFERENCE DATA

SREF = 2690.0000 SQ.FT. XMRP = 1360.1000 IN. XT
LREF = 1290.3000 IN. YMRP = .0000 IN. YT
BREF = 1290.3000 IN. ZMRP = 416.4000 IN. ZT
SCALE = .0100

PARAMETRIC DATA

DLT-Y = 60.000 ALPHA = 5.000
BETA = 3.000 DLTALF = .000
DLTBTA = 3.000 MACH = 5.930
AILRON = .000 ELEVON = .000
GRID = 4.000

RUN NO. 194/ 0 GRADIENT INTERVAL = -5.00/ 5.00

DLT-X	DLT-Z	CN	CA	CLM	CY	CYN	CBL	XCP/L	YCP/L	CPB
.660	19.251	.01519	.09567	.02873	-.07181	-.01995	.00080	-.68130	.36421	.00000
.715	97.629	.02960	.09262	.02509	-.06864	-.02172	.00062	-.03372	.33727	.00000
.689	199.110	.04280	.09171	.02459	-.06925	-.02289	.00042	.15700	.32746	.00000
.827	300.230	.05514	.08840	.01843	-.07321	-.02099	.00065	.32479	.35804	.00000
.824	402.230	.05494	.08941	.01823	-.07404	-.02105	.00066	.32649	.35975	.00000
.674	501.170	.05567	.08961	.01809	-.07411	-.02091	.00066	.33128	.36119	.00000
.953	598.500	.05541	.09003	.01846	-.07659	-.02164	.00067	.32560	.36090	.00000
	GRADIENT	.00000	.00000	.00000	.00000	.00000	.00000	.00000	.00000	.00000

RUN NO. 195/ 0 GRADIENT INTERVAL = -5.00/ 5.00

DLT-X	DLT-Z	CN	CA	CLM	CY	CYN	CBL	XCP/L	YCP/L	CPB
200.700	22.555	.00569	.09540	.01976	-.07366	-.01769	.00090	-1.86750	.39054	.00000
200.690	100.990	.01967	.09418	.02602	-.06841	-.02076	.00068	-.36596	.34628	.00000
200.660	200.680	.03781	.09283	.02647	-.06782	-.02265	.00033	.06924	.32500	.00000
200.670	300.170	.05429	.08768	.01867	-.07253	-.02083	.00066	.31814	.35771	.00000
200.650	398.080	.05537	.08927	.01854	-.07380	-.02107	.00066	.32442	.35890	.00000
200.590	498.400	.05534	.08940	.01855	-.07428	-.02082	.00067	.32411	.36250	.00000
200.680	599.720	.05528	.08943	.01892	-.07447	-.02117	.00066	.31922	.35971	.00000
	GRADIENT	.00000	.00000	.00000	.00000	.00000	.00000	.00000	.00000	.00000

ORIGINAL PAGE IS OF POOR QUALITY

AEDC VA422(IA17) ORB AND ET SEPARATING(ET DATA) (ATR232) (24 JUL 75)

REFERENCE DATA

SREF = 2690.0000 SQ.FT. XMRP = 1360.1000 IN. XT
LREF = 1290.3000 IN. YMRP = .0000 IN. YT
BREF = 1290.3000 IN. ZMRP = 416.4000 IN. ZT
SCALE = .0100

PARAMETRIC DATA

DLT-Y = 60.000 ALPHA = 5.000
BETA = 3.000 DLTALF = -10.000
DLTBTA = 3.000 MACH = 5.930
AILRON = .000 ELEVON = .000
GRID = 4.000

RUN NO. 188/ 0 GRADIENT INTERVAL = -5.00/ 5.00

DLT-X	DLT-Z	CN	CA	CLM	CY	CYN	CBL	XCP/L	YCP/L	CPB
.646	401.220	-.08505	.09679	-.00309	-.06905	-.02131	.00024	.53293	.34271	.00000
.575	502.980	-.06863	.09577	-.01338	-.07042	-.02073	.00058	.42216	.35271	.00000
.541	601.750	-.06844	.09572	-.01385	-.07062	-.02065	.00059	.41697	.35402	.00000
.611	750.080	-.06794	.09603	-.01350	-.07216	-.02119	.00060	.41949	.35322	.00000
-.326	803.160	-.06918	.09755	-.01372	-.07457	-.02188	.00062	.41980	.35332	.00000
	GRADIENT	.00000	.00000	.00000	.00000	.00000	.00000	.00000	.00000	.00000

RUN NO. 189/ 0 GRADIENT INTERVAL = -5.00/ 5.00

DLT-X	DLT-Z	CN	CA	CLM	CY	CYN	CBL	XCP/L	YCP/L	CPB
200.690	399.890	-.09428	.09841	.00217	-.06936	-.02069	.00018	.57442	.34988	.00000
200.600	497.390	-.06713	.09357	-.01276	-.06945	-.02044	.00055	.42551	.35269	.00000
200.560	597.890	-.06742	.09461	-.01337	-.06969	-.02045	.00057	.41976	.35337	.00000
200.590	749.590	-.06699	.09565	-.01308	-.07303	-.02147	.00062	.42192	.35296	.00000
200.590	800.090	-.06906	.09718	-.01326	-.07373	-.02206	.00061	.42424	.34930	.00000
	GRADIENT	.00000	.00000	.00000	.00000	.00000	.00000	.00000	.00000	.00000

RUN NO. 190/ 0 GRADIENT INTERVAL = -5.00/ 5.00

DLT-X	DLT-Z	CN	CA	CLM	CY	CYN	CBL	XCP/L	YCP/L	CPB
400.600	402.630	-.10526	.10247	.00769	-.07013	-.02076	.00015	.60941	.35151	.00000
400.570	501.090	-.07035	.09472	-.01192	-.06934	-.02097	.00050	.43995	.34709	.00000
400.550	600.170	-.06707	.09492	-.01324	-.07197	-.02109	.00060	.42046	.35363	.00000
400.600	750.020	-.06720	.09563	-.01318	-.07386	-.02204	.00061	.42130	.34987	.00000
400.640	800.090	-.06783	.09622	-.01340	-.07401	-.02252	.00060	.42029	.34578	.00000
	GRADIENT	.00000	.00000	.00000	.00000	.00000	.00000	.00000	.00000	.00000

AEDC VA422(IA17) ORB AND ET SEPARATING(ET DATA) (ATR234) (24 JUL 75)

REFERENCE DATA

SREF = 2690.0000 SQ.FT. XMRP = 1360.1000 IN. XT
LREF = 1290.3000 IN. YMRP = .0000 IN. YT
BREF = 1290.3000 IN. ZMRP = 416.4000 IN. ZT
SCALE = .0100

PARAMETRIC DATA

DLT-Y = 60.000 ALPHA = 5.000
BETA = 3.000 DLTALF = -20.000
DLTBTA = 3.000 MACH = 5.930
AILRON = .000 ELEVON = .000
GRID = 4.000

RUN NO. 186/ 0 GRADIENT INTERVAL = -5.00/ 5.00

DLT-X	DLT-Z	CN	CA	CLM	CY	CYN	CBL	XCP/L	YCP/L	CPB
.644	801.340	-.23404	.11311	-.03280	-.08624	-.01791	.00065	.46044	.41328	.00000
.487	900.270	-.23548	.11327	-.03380	-.08821	-.01894	.00066	.45804	.40837	.00000
.575	1000.200	-.23678	.11486	-.03449	-.08857	-.01872	.00064	.45659	.41066	.00000
	GRADIENT	.00000	.00000	.00000	.00000	.00000	.00000	.00000	.00000	.00000

RUN NO. 182/ 0 GRADIENT INTERVAL = -5.00/ 5.00

DLT-X	DLT-Z	CN	CA	CLM	CY	CYN	CBL	XCP/L	YCP/L	CPB
200.680	750.750	-.23378	.11292	-.03211	-.08544	-.01776	.00063	.46239	.41309	.00000
200.530	800.370	-.23445	.11360	-.03261	-.08576	-.01839	.00063	.46115	.40852	.00000
200.560	900.250	-.23420	.11404	-.03394	-.08863	-.01895	.00066	.45711	.40897	.00000
200.490	1000.100	-.23625	.11466	-.03460	-.08866	-.01890	.00063	.45602	.40941	.00000
	GRADIENT	.00000	.00000	.00000	.00000	.00000	.00000	.00000	.00000	.00000

RUN NO. 183/ 0 GRADIENT INTERVAL = -5.00/ 5.00

DLT-X	DLT-Z	CN	CA	CLM	CY	CYN	CBL	XCP/L	YCP/L	CPB
400.560	749.700	-.23582	.11263	-.03072	-.08550	-.01830	.00052	.46733	.40885	.00000
400.600	800.410	-.23316	.11316	-.03278	-.08642	-.01835	.00065	.46013	.41000	.00000
400.580	900.370	-.23390	.11423	-.03412	-.08818	-.01903	.00065	.45643	.40756	.00000
400.590	1000.400	-.23779	.11420	-.03467	-.08938	-.01907	.00065	.45647	.40929	.00000
	GRADIENT	.00000	.00000	.00000	.00000	.00000	.00000	.00000	.00000	.00000

AEDC VA422(IA17) ORB AND ET SEPARATING(ET DATA) (ATR235) (24 JUL 75)

REFERENCE DATA

SREF = 2690.0000 SQ.FT. XMRP = 1360.1000 IN. XT
LREF = 1290.3000 IN. YMRP = .0000 IN. YT
BREF = 1290.3000 IN. ZMRP = 416.4000 IN. ZT
SCALE = .0100

PARAMETRIC DATA

DLT-Y = 60.000 ALPHA = -5.000
BETA = .000 DLTALF = .000
DLTBTA = .000 MACH = 5.930
AILRON = .000 ELEVON = .000
GRID = 6.000

RUN NO. 244/ 0 GRADIENT INTERVAL = -5.00/ 5.00

DLT-X	DLT-Z	CN	CA	CLM	CY	CYN	CBL	XCP/L	YCP/L	CPB
.558	17.571	-.09565	.09598	-.01365	.00526	.00060	.00018	.45867	.47904	.00000
.498	100.800	-.09075	.09693	-.00976	.00374	.00021	.00005	.48322	.00000	.00000
.514	199.120	-.08165	.10099	-.00760	.00288	.00022	.00001	.49330	.00000	.00000
.534	298.490	-.07480	.09677	-.01364	.00267	.00009	.00008	.43095	.00000	.00000
.471	399.000	-.07179	.09568	-.01721	.00212	-.00066	.00004	.39088	.00000	.00000
.587	500.070	-.07358	.09415	-.01819	.00199	-.00060	.00003	.38565	.00000	.00000
.581	600.020	-.07217	.09255	-.01731	.00316	.00007	.00002	.39073	.00000	.00000
	GRADIENT	.00000	.00000	.00000	.00000	.00000	.00000	.00000	.00000	.00000

RUN NO. 243/ 0 GRADIENT INTERVAL = -5.00/ 5.00

DLT-X	DLT-Z	CN	CA	CLM	CY	CYN	CBL	XCP/L	YCP/L	CPB
200.500	21.952	-.09735	.09535	-.02144	.00664	-.00154	.00007	.40448	.72094	.00000
200.530	101.770	-.09087	.09759	-.01036	.00256	.00009	.00000	.47866	.00000	.00000
200.540	202.190	-.08104	.09776	-.00964	.00116	-.00011	.00005	.47520	.00000	.00000
200.410	300.670	-.08096	.10248	-.00940	.00160	-.00066	.00005	.47722	.00000	.00000
200.580	400.130	-.07280	.09616	-.01736	.00071	-.00106	.00008	.39174	.00000	.00000
200.560	500.130	-.07322	.09373	-.01814	.00226	-.00081	.00006	.38529	.00000	.00000
200.460	600.150	-.07163	.09315	-.01779	.00300	-.00010	.00003	.38480	.00000	.00000
	GRADIENT	.00000	.00000	.00000	.00000	.00000	.00000	.00000	.00000	.00000

RUN NO. 242/ 0 GRADIENT INTERVAL = -5.00/ 5.00

DLT-X	DLT-Z	CN	CA	CLM	CY	CYN	CBL	XCP/L	YCP/L	CPB
400.420	19.570	-.09583	.09563	-.02659	.00393	-.00114	.00002	.36452	.00000	.00000
400.450	100.100	-.09126	.09619	-.01316	.00279	-.00011	.00005	.45757	.00000	.00000
400.400	197.790	-.07792	.09615	-.01259	.00252	-.00018	.00003	.44544	.00000	.00000
400.430	298.180	-.08179	.09860	-.01012	.00145	-.00050	.00006	.47191	.00000	.00000
400.510	399.950	-.08041	.09785	-.01334	.00232	-.00106	.00012	.44242	.00000	.00000
400.510	500.090	-.07210	.09423	-.01787	.00212	-.00052	.00007	.38518	.00000	.00000
400.570	600.090	-.07179	.09281	-.01780	.00324	-.00010	.00005	.38516	.00000	.00000
	GRADIENT	.00000	.00000	.00000	.00000	.00000	.00000	.00000	.00000	.00000

AEDC VA422(IA17) ORB AND ET SEPARATING(ET DATA) (ATR236) (24 JUL 75)

REFERENCE DATA

SREF = 2690.0000 SQ.FT. XMRP = 1360.1000 IN. XT
LREF = 1290.3000 IN. YMRP = .0000 IN. YT
BREF = 1290.3000 IN. ZMRP = 416.4000 IN. ZT
SCALE = .0100

PARAMETRIC DATA

DLT-Y = 60.000 ALPHA = -5.000
BETA = .000 DLTALF = -10.000
DLTBTA = .000 MACH = 5.930
AILRON = .000 ELEVON = .000
GRID = 6.000

RUN NO. 252/ 0 GRADIENT INTERVAL = -5.00/ 5.00

DLT-X	DLT-Z	CN	CA	CLM	CY	CYN	CBL	XCP/L	YCP/L	CPB
.404	402.690	-.26525	.12988	-.02127	.00226	.00013	.00010	.50231	.00000	.00000
.413	498.640	-.25194	.12064	-.02884	.00396	-.00057	.00035	.47836	.00000	.00000
.446	599.740	-.23626	.11163	-.03797	.00357	.00024	.00021	.44607	.00000	.00000
.447	750.080	-.23368	.11163	-.03650	.00483	.00066	.00017	.44922	.00000	.00000
.447	800.210	-.23306	.11117	-.03643	.00421	.00082	.00018	.44914	.00000	.00000
	GRADIENT	.00000	.00000	.00000	.00000	.00000	.00000	.00000	.00000	.00000

RUN NO. 251/ 0 GRADIENT INTERVAL = -5.00/ 5.00

DLT-X	DLT-Z	CN	CA	CLM	CY	CYN	CBL	XCP/L	YCP/L	CPB
200.500	402.120	-.25621	.12150	-.02906	.00148	-.00022	.00010	.47911	.00000	.00000
200.640	500.540	-.25868	.12469	-.02631	.00246	-.00032	.00015	.48727	.00000	.00000
200.440	600.230	-.24420	.11402	-.03281	.00351	-.00001	.00026	.46447	.00000	.00000
200.410	750.190	-.23301	.11111	-.03688	.00383	.00060	.00020	.44776	.00000	.00000
200.460	800.140	-.23308	.11093	-.03662	.00428	.00079	.00017	.44859	.00000	.00000
	GRADIENT	.00000	.00000	.00000	.00000	.00000	.00000	.00000	.00000	.00000

RUN NO. 250/ 0 GRADIENT INTERVAL = -5.00/ 5.00

DLT-X	DLT-Z	CN	CA	CLM	CY	CYN	CBL	XCP/L	YCP/L	CPB
400.340	400.230	-.24336	.11478	-.03734	.00330	-.00039	.00011	.45115	.00000	.00000
400.460	499.550	-.25305	.11980	-.03015	.00237	-.00003	.00010	.47511	.00000	.00000
400.460	600.010	-.25327	.12186	-.02660	.00406	-.00065	.00032	.48496	.00000	.00000
400.470	750.170	-.23349	.11149	-.03720	.00420	.00053	.00019	.44703	.00000	.00000
400.430	800.180	-.23327	.11054	-.03683	.00425	.00079	.00015	.44803	.00000	.00000
	GRADIENT	.00000	.00000	.00000	.00000	.00000	.00000	.00000	.00000	.00000

ORIGINAL PAGE IS OF POOR QUALITY

AEDC VA422(IA17) ORB AND ET SEPARATING(ET DATA) (ATR238) (24 JUL 75)

REFERENCE DATA

SREF = 2690.0000 SQ.FT. XMRP = 1360.1000 IN. XT
LREF = 1290.3000 IN. YMRP = .0000 IN. YT
BREF = 1290.3000 IN. ZMRP = 416.4000 IN. ZT
SCALE = .0100

PARAMETRIC DATA

DLT-Y = 60.000 ALPHA = -5.000
BETA = .000 DLTALF = -20.000
DLTBTA = .000 MACH = 5.930
AILRON = .000 ELEVON = .000
GRID = 6.000

RUN NO. 261/ 0 GRADIENT INTERVAL = -5.00/ 5.00

DLT-X	DLT-Z	CN	CA	CLM	CY	CYN	CBL	XCP/L	YCP/L	CPB
.453	800.020	-.49773	.14461	-.02481	.00723	.00154	.00065	.52351	.00000	.00000
.473	896.810	-.47956	.14628	-.03399	.00773	.00063	.00046	.50882	.50158	.00000
.412	999.740	-.47868	.14723	-.03335	.00832	.00042	.00045	.50967	.52317	.00000
	GRADIENT	.00000	.00000	.00000	.00000	.00000	.00000	.00000	.00000	.00000

RUN NO. 259/ 0 GRADIENT INTERVAL = -5.00/ 5.00

DLT-X	DLT-Z	CN	CA	CLM	CY	CYN	CBL	XCP/L	YCP/L	CPB
200.250	754.720	-.56700	.18426	.01327	.00209	.00327	.00101	.57469	.00000	.00000
200.450	797.380	-.52237	.15447	-.01223	.00643	.00096	.00081	.54199	.00000	.00000
200.540	898.240	-.48533	.14613	-.03093	.00740	.00081	.00051	.51381	.00000	.00000
200.360	1000.300	-.47788	.14685	-.03362	.00894	.00047	.00042	.50920	.52137	.00000
	GRADIENT	.00000	.00000	.00000	.00000	.00000	.00000	.00000	.00000	.00000

RUN NO. 258/ 0 GRADIENT INTERVAL = -5.00/ 5.00

DLT-X	DLT-Z	CN	CA	CLM	CY	CYN	CBL	XCP/L	YCP/L	CPB
400.410	750.860	-.51926	.15997	-.01516	.00539	.00090	.00033	.53794	.00000	.00000
400.360	800.670	-.50887	.16193	-.01816	.00729	-.00000	.00075	.53341	.00000	.00000
400.430	900.440	-.49408	.15052	-.02525	.00783	.00030	.00050	.52263	.53133	.00000
400.480	1000.300	-.47694	.14622	-.03404	.01015	.00011	.00044	.50849	.55059	.00000
	GRADIENT	.00000	.00000	.00000	.00000	.00000	.00000	.00000	.00000	.00000

AEDC VA422(IA17) ORB AND ET SEPARATING(ET DATA) (ATR239) (24 JUL 75)

REFERENCE DATA

SREF = 2690.0000 SQ.FT. XMRP = 1360.1000 IN. XT
LREF = 1290.3000 IN. YMRP = .0000 IN. YT
BREF = 1290.3000 IN. ZMRP = 416.4000 IN. ZT
SCALE = .0100

PARAMETRIC DATA

DLT-Y = 60.000 ALPHA = -5.000
BETA = .000 DLTALF = .000
DLTBTA = 3.000 MACH = 5.930
AILRON = .000 ELEVON = .000
GRID = 6.000

RUN NO. 274/ 0 GRADIENT INTERVAL = -5.00/ 5.00

DLT-X	DLT-Z	CN	CA	CLM	CY	CYN	CBL	XCP/L	YCP/L	CPB
.583	19.637	-.10110	.09856	-.01204	-.03583	-.00865	.00049	.47513	.38965	.00000
.638	101.530	-.09192	.09883	-.00861	-.03377	-.00931	.00032	.49287	.36575	.00000
.705	201.940	-.08471	.10398	-.00620	-.03232	-.01073	.00029	.50720	.32635	.00000
.539	301.370	-.07693	.10009	-.01268	-.03292	-.01135	.00030	.44321	.31735	.00000
.521	400.200	-.07353	.09810	-.01628	-.03272	-.01131	.00032	.40366	.31683	.00000
.537	500.190	-.07505	.09650	-.01746	-.03387	-.01132	.00034	.39582	.32477	.00000
.478	600.170	-.07424	.09555	-.01594	-.03268	-.01048	.00033	.40832	.33430	.00000
	GRADIENT	.00000	.00000	.00000	.00000	.00000	.00000	.00000	.00000	.00000

RUN NO. 275/ 0 GRADIENT INTERVAL = -5.00/ 5.00

DLT-X	DLT-Z	CN	CA	CLM	CY	CYN	CBL	XCP/L	YCP/L	CPB
200.420	22.932	-.10424	.09600	-.02084	-.03542	-.01023	.00048	.41868	.35662	.00000
200.600	98.087	-.09233	.09844	-.00941	-.03626	-.00927	.00032	.48717	.37973	.00000
200.480	198.510	-.08195	.10077	-.00770	-.03555	-.01070	.00032	.49267	.34801	.00000
200.550	297.930	-.08125	.10479	-.00762	-.03530	-.01219	.00030	.49279	.31714	.00000
200.570	399.600	-.07511	.09811	-.01571	-.03475	-.01199	.00031	.41220	.31734	.00000
200.490	500.060	-.07352	.09778	-.01652	-.03360	-.01155	.00033	.40134	.31813	.00000
200.580	600.150	-.07446	.09454	-.01666	-.03375	-.01110	.00033	.40206	.32859	.00000
	GRADIENT	.00000	.00000	.00000	.00000	.00000	.00000	.00000	.00000	.00000

AEDC VA422(IA17) ORB AND ET SEPARATING(ET DATA) (ATR240) (24 JUL 75)

REFERENCE DATA

SREF = 2690.0000 SQ.FT. XMRP = 1360.1000 IN. XT
LREF = 1290.3000 IN. YMRP = .0000 IN. YT
BREF = 1290.3000 IN. ZMRP = 416.4000 IN. ZT
SCALE = .0100

PARAMETRIC DATA

DLT-Y = 60.000 ALPHA = -5.000
BETA = .000 DLTALF = -10.000
DLTBTA = 3.000 MACH = 5.930
AILRON = .000 ELEVON = .000
GRID = 6.000

RUN NO. 268/ 0 GRADIENT INTERVAL = -5.00/ 5.00

DLT-X	DLT-Z	CN	CA	CLM	CY	CYN	CBL	XCP/L	YCP/L	CPB
.424	404.110	-.27030	.12799	-.02051	-.04177	-.00840	.00039	.50533	.41785	.00000
.520	500.900	-.25780	.12127	-.02901	-.04094	-.00938	.00034	.47973	.39821	.00000
.616	600.410	-.24421	.11306	-.03665	-.04075	-.00837	.00028	.45350	.41480	.00000
.533	750.200	-.23960	.11209	-.03495	-.03986	-.00770	.00033	.45643	.42339	.00000
.354	801.130	-.24006	.11137	-.03474	-.04030	-.00775	.00032	.45723	.42392	.00000
	GRADIENT	.00000	.00000	.00000	.00000	.00000	.00000	.00000	.00000	.00000

RUN NO. 269/ 0 GRADIENT INTERVAL = -5.00/ 5.00

DLT-X	DLT-Z	CN	CA	CLM	CY	CYN	CBL	XCP/L	YCP/L	CPB
200.490	397.910	-.26167	.12112	-.02817	-.04386	-.00792	.00040	.48314	.43217	.00000
200.510	498.510	-.26417	.12462	-.02529	-.04311	-.00892	.00031	.49146	.41378	.00000
200.470	599.980	-.25138	.11641	-.03116	-.04112	-.00867	.00031	.47175	.41106	.00000
200.600	750.120	-.24103	.11273	-.03501	-.04074	-.00795	.00034	.45687	.42196	.00000
200.540	800.050	-.23917	.11207	-.03505	-.04042	-.00791	.00033	.45596	.42156	.00000
	GRADIENT	.00000	.00000	.00000	.00000	.00000	.00000	.00000	.00000	.00000

RUN NO. 270/ 0 GRADIENT INTERVAL = -5.00/ 5.00

DLT-X	DLT-Z	CN	CA	CLM	CY	CYN	CBL	XCP/L	YCP/L	CPB
400.420	401.140	-.24735	.11318	-.03809	-.04537	-.00851	.00041	.45075	.42738	.00000
400.510	500.620	-.26001	.11910	-.02947	-.04269	-.00836	.00037	.47915	.42145	.00000
400.420	600.210	-.25946	.12381	-.02500	-.04110	-.00944	.00046	.49104	.39783	.00000
400.470	750.180	-.23889	.11257	-.03549	-.04106	-.00815	.00032	.45455	.41969	.00000
400.490	800.160	-.23950	.11238	-.03531	-.04062	-.00796	.00034	.45533	.42149	.00000
	GRADIENT	.00000	.00000	.00000	.00000	.00000	.00000	.00000	.00000	.00000

AEDC VA422(IA17) ORB AND ET SEPARATING(ET DATA) (ATR242) (24 JUL 75)

REFERENCE DATA

SREF = 2690.0000 SQ.FT. XMRP = 1360.1000 IN. XT
LREF = 1290.3000 IN. YMRP = .0000 IN. YT
BREF = 1290.3000 IN. ZMRP = 416.4000 IN. ZT
SCALE = .0100

PARAMETRIC DATA

DLT-Y = 60.000 ALPHA = -5.000
BETA = .000 DLTALF = -20.000
DLTBTA = 3.000 MACH = 5.930
AILRON = .000 ELEVON = .000
GRID = 6.000

RUN NO. 266/ 0 GRADIENT INTERVAL = -5.00/ 5.00

DLT-X	DLT-Z	CN	CA	CLM	CY	CYN	CBL	XCP/L	YCP/L	CPB
.465	804.520	-.51033	.14615	-.02099	-.05057	-.00494	.00040	.52960	.49004	.00000
.590	900.950	-.48690	.14694	-.03242	-.04999	-.00531	.00049	.51182	.48418	.00000
.512	1000.400	-.48542	.14572	-.03250	-.05050	-.00530	.00045	.51156	.48500	.00000
	GRADIENT	.00000	.00000	.00000	.00000	.00000	.00000	.00000	.00000	.00000

RUN NO. 262/ 0 GRADIENT INTERVAL = -5.00/ 5.00

DLT-X	DLT-Z	CN	CA	CLM	CY	CYN	CBL	XCP/L	YCP/L	CPB
200.350	753.700	-.57114	.18012	.01231	-.05239	-.00431	.00125	.57339	.50089	.00000
200.430	802.210	-.51528	.15377	-.01743	-.05070	-.00557	.00043	.53471	.48160	.00000
200.410	900.340	-.49109	.14598	-.02990	-.05059	-.00517	.00043	.51581	.48697	.00000
200.450	1000.400	-.48408	.14512	-.03342	-.05001	-.00486	.00041	.51010	.49039	.00000
	GRADIENT	.00000	.00000	.00000	.00000	.00000	.00000	.00000	.00000	.00000

RUN NO. 263/ 0 GRADIENT INTERVAL = -5.00/ 5.00

DLT-X	DLT-Z	CN	CA	CLM	CY	CYN	CBL	XCP/L	YCP/L	CPB
400.350	747.040	-.55696	.17486	.00401	-.05711	-.00385	.00098	.56337	.51122	.00000
400.510	798.810	-.51729	.16061	-.01649	-.05236	-.00646	.00041	.53607	.47213	.00000
400.330	900.090	-.49959	.14856	-.02512	-.05141	-.00512	.00027	.52322	.48879	.00000
400.380	1000.400	-.48187	.14390	-.03375	-.05217	-.00512	.00039	.50941	.48985	.00000
	GRADIENT	.00000	.00000	.00000	.00000	.00000	.00000	.00000	.00000	.00000

AEDC VA422(IA17) ORB AND ET SEPARATING(ET DATA) (ATR243) (24 JUL 75)

REFERENCE DATA

SREF = 2690.0000 SQ.FT. XMRP = 1360.1000 IN. XT
LREF = 1290.3000 IN. YMRP = .0000 IN. YT
BREF = 1290.3000 IN. ZMRP = 416.4000 IN. ZT
SCALE = .0100

PARAMETRIC DATA

DLT-Y = 60.000 ALPHA = -5.000
BETA = 3.000 DLTALF = .000
DLTBTA = .000 MACH = 5.930
AILRON = .000 ELEVON = .000
GRID = 7.000

RUN NO. 282/ 0 GRADIENT INTERVAL = -5.00/ 5.00

DLT-X	DLT-Z	CN	CA	CLM	CY	CYN	CBL	XCP/L	YCP/L	CPB
.633	17.466	-.09952	.09812	-.01151	-.03749	-.00879	.00040	.47752	.39454	.00000
.539	100.700	-.09271	.09727	-.00932	-.03897	-.00926	.00038	.48811	.39236	.00000
.620	198.760	-.08284	.10065	-.00676	-.03561	-.01078	.00033	.50137	.34682	.00000
.647	298.330	-.07554	.09723	-.01153	-.03614	-.01220	.00030	.45173	.32246	.00000
.592	399.100	-.07194	.09528	-.01506	-.03555	-.01220	.00032	.41211	.31853	.00000
.615	500.010	-.07182	.09662	-.01489	-.03419	-.01141	.00029	.41347	.32525	.00000
.697	600.150	-.07116	.09549	-.01435	-.03331	-.01067	.00028	.41750	.33449	.00000
	GRADIENT	.00000	.00000	.00000	.00000	.00000	.00000	.00000	.00000	.00000

RUN NO. 281/ 0 GRADIENT INTERVAL = -5.00/ 5.00

DLT-X	DLT-Z	CN	CA	CLM	CY	CYN	CBL	XCP/L	YCP/L	CPB
200.520	22.218	-.10138	.09631	-.02007	-.03607	-.01093	.00046	.42001	.34666	.00000
200.590	102.090	-.09479	.09884	-.00936	-.03805	-.00903	.00033	.48936	.39254	.00000
200.580	202.190	-.08425	.09910	-.00876	-.03709	-.01052	.00034	.48573	.36022	.00000
200.650	300.660	-.08289	.10090	-.00807	-.03572	-.01210	.00030	.49030	.32162	.00000
200.550	400.120	-.07301	.09488	-.01484	-.03417	-.01231	.00031	.41633	.30655	.00000
200.550	500.140	-.07141	.09505	-.01524	-.03343	-.01164	.00031	.40925	.31519	.00000
200.490	600.090	-.07133	.09580	-.01474	-.03242	-.01089	.00029	.41400	.32356	.00000
	GRADIENT	.00000	.00000	.00000	.00000	.00000	.00000	.00000	.00000	.00000

AEDC VA422(IA17) ORB AND ET SEPARATING(ET DATA) (ATR244) (24 JUL 75)

REFERENCE DATA

SREF = 2690.0000 SQ.FT. XMRP = 1360.1000 IN. XT
LREF = 1290.3000 IN. YMRP = .0000 IN. YT
BREF = 1290.3000 IN. ZMRP = 416.4000 IN. ZT
SCALE = .0100

PARAMETRIC DATA

DLT-Y = 60.000 ALPHA = -5.000
BETA = 3.000 DLTALF = -10.000
DLTBTA = .000 MACH = 5.930
AILRON = .000 ELEVON = .000
GRID = 7.000

RUN NO. 290/ 0 GRADIENT INTERVAL = -5.00/ 5.00

DLT-X	DLT-Z	CN	CA	CLM	CY	CYN	CBL	XCP/L	YCP/L	CPB
.541	402.510	-.26350	.12186	-.02062	-.04518	-.00790	.00035	.50366	.43624	.00000
.533	496.760	-.25280	.11970	-.02511	-.04318	-.00933	.00050	.48894	.40736	.00000
.575	599.850	-.23852	.11142	-.03405	-.04285	-.00862	.00036	.45862	.41781	.00000
.478	750.220	-.23739	.11217	-.03408	-.04253	-.00805	.00032	.45804	.42603	.00000
.552	800.150	-.23734	.11288	-.03402	-.04187	-.00790	.00030	.45821	.42650	.00000
	GRADIENT	.00000	.00000	.00000	.00000	.00000	.00000	.00000	.00000	.00000

RUN NO. 289/ 0 GRADIENT INTERVAL = -5.00/ 5.00

DLT-X	DLT-Z	CN	CA	CLM	CY	CYN	CBL	XCP/L	YCP/L	CPB
200.610	402.180	-.25536	.11605	-.02771	-.04585	-.00819	.00041	.48253	.43359	.00000
200.610	500.510	-.26014	.12250	-.02243	-.04478	-.00905	.00036	.49810	.41712	.00000
200.500	600.070	-.24651	.11475	-.02912	-.04173	-.00847	.00031	.47581	.41649	.00000
200.520	750.190	-.23742	.11237	-.03432	-.04050	-.00795	.00033	.45736	.42125	.00000
200.590	800.130	-.23698	.11164	-.03438	-.04033	-.00795	.00032	.45699	.42069	.00000
	GRADIENT	.00000	.00000	.00000	.00000	.00000	.00000	.00000	.00000	.00000

RUN NO. 288/ 0 GRADIENT INTERVAL = -5.00/ 5.00

DLT-X	DLT-Z	CN	CA	CLM	CY	CYN	CBL	XCP/L	YCP/L	CPB
400.490	400.270	-.24502	.11124	-.03601	-.04555	-.00842	.00037	.45565	.42925	.00000
400.460	499.570	-.25465	.11778	-.02682	-.04517	-.00852	.00039	.48476	.42662	.00000
400.540	600.000	-.25644	.12054	-.02404	-.04098	-.00933	.00040	.49285	.39923	.00000
400.560	750.220	-.23891	.11183	-.03479	-.04124	-.00813	.00033	.45660	.42054	.00000
400.510	800.060	-.23752	.11198	-.03450	-.04098	-.00821	.00034	.45687	.41832	.00000
	GRADIENT	.00000	.00000	.00000	.00000	.00000	.00000	.00000	.00000	.00000

ORIGINAL PAGE IS OF POOR QUALITY

AEDC VA432(IA17) ORB AND ET SEPARATING(ET DATA) (ATR246) (24 JUL 75)

REFERENCE DATA

SREF = 2690.0000 SQ.FT. XMRP = 1360.1000 IN. XT
LREF = 1290.3000 IN. YMRP = .0000 IN. YT
BREF = 1290.3000 IN. ZMRP = 416.4000 IN. ZT
SCALE = .0100

PARAMETRIC DATA

DLT-Y = 60.000 ALPHA = -5.000
BETA = 3.000 DLTALF = -20.000
DLTBTA = .000 MACH = 5.930
AILRON = .000 ELEVON = .000
GRID = 7.000

RUN NO. 299/ 0 GRADIENT INTERVAL = -5.00/ 5.00

DLT-X	DLT-Z	CN	CA	CLM	CY	CYN	CBL	XCP/L	YCP/L	CPB
.384	800.330	-.49891	.14348	-.02231	-.05478	-.00419	.00036	.52710	.50484	.00000
.574	896.840	-.48098	.14582	-.03227	-.05401	-.00485	.00039	.51147	.49561	.00000
.475	1000.000	-.48174	.14570	-.03200	-.05382	-.00492	.00043	.51194	.49448	.00000
	GRADIENT	.00000	.00000	.00000	.00000	.00000	.00000	.00000	.00000	.00000

RUN NO. 297/ 0 GRADIENT INTERVAL = -5.00/ 5.00

DLT-X	DLT-Z	CN	CA	CLM	CY	CYN	CBL	XCP/L	YCP/L	CPB
200.330	754.870	-.56794	.18021	.01451	-.05826	-.00326	.00109	.57619	.51923	.00000
200.520	797.220	-.51594	.15095	-.01472	-.05468	-.00499	.00044	.53841	.49453	.00000
200.470	898.350	-.48677	.14363	-.02934	-.05488	-.00487	.00046	.51624	.49635	.00000
200.460	1000.400	-.48181	.14493	-.03229	-.05285	-.00517	.00046	.51152	.48999	.00000
	GRADIENT	.00000	.00000	.00000	.00000	.00000	.00000	.00000	.00000	.00000

RUN NO. 296/ 0 GRADIENT INTERVAL = -5.00/ 5.00

DLT-X	DLT-Z	CN	CA	CLM	CY	CYN	CBL	XCP/L	YCP/L	CPB
400.510	750.850	-.51620	.15224	-.01712	-.05646	-.00414	.00042	.53517	.50708	.00000
400.480	800.530	-.51101	.15850	-.01635	-.05366	-.00612	.00047	.53599	.47873	.00000
400.550	900.330	-.49676	.14718	-.02470	-.05190	-.00463	.00035	.52360	.49598	.00000
400.500	1000.300	-.48062	.14473	-.03284	-.05107	-.00530	.00046	.51061	.48588	.00000
	GRADIENT	.00000	.00000	.00000	.00000	.00000	.00000	.00000	.00000	.00000

AEDC VA422(IA17) ORB AND ET SEPARATING(ET DATA) (ATR247) (24 JUL 75)

REFERENCE DATA

SREF = 2690.0000 SQ.FT. XMRP = 1360.1000 IN. XT
LREF = 1290.3000 IN. YMRP = .0000 IN. YT
BREF = 1290.3000 IN. ZMRP = 416.4000 IN. ZT
SCALE = .0100

PARAMETRIC DATA

DLT-Y = 60.000 ALPHA = -5.000
BETA = 3.000 DLTALF = .000
DLTBTA = 3.000 MACH = 5.930
AILRON = .000 ELEVON = .000
GRID = 7.000

RUN NO. 312/ 0 GRADIENT INTERVAL = -5.00/ 5.00

DLT-X	DLT-Z	CN	CA	CLM	CY	CYN	CBL	XCP/L	YCP/L	CPB
.560	19.403	-.10453	.09873	-.00997	-.07671	-.01787	.00081	.49173	.39561	.00000
.564	101.640	-.09919	.09947	-.00671	-.07546	-.01825	.00072	.51104	.38936	.00000
.696	202.190	-.08652	.10121	-.00619	-.07330	-.02120	.00063	.50832	.35631	.00000
.668	301.270	-.07688	.09673	-.01232	-.07471	-.02255	.00054	.44637	.34746	.00000
.649	400.280	-.07485	.09598	-.01479	-.07373	-.02216	.00061	.42032	.34838	.00000
.709	500.320	-.07513	.09574	-.01496	-.07338	-.02174	.00060	.41927	.35140	.00000
.570	600.140	-.07459	.09603	-.01437	-.07133	-.02046	.00057	.42379	.35794	.00000
	GRADIENT	.00000	.00000	.00000	.00000	.00000	.00000	.00000	.00000	.00000

RUN NO. 313/ 0 GRADIENT INTERVAL = -5.00/ 5.00

DLT-X	DLT-Z	CN	CA	CLM	CY	CYN	CBL	XCP/L	YCP/L	CPB
200.400	23.080	-.11187	.09785	-.01714	-.08085	-.01863	.00086	.45133	.39736	.00000
200.470	98.046	-.09734	.09921	-.00745	-.07794	-.01803	.00071	.50489	.39674	.00000
200.600	198.290	-.08572	.10001	-.00707	-.07592	-.02052	.00067	.50074	.36949	.00000
200.590	297.990	-.08243	.09924	-.00803	-.07516	-.02275	.00052	.49029	.34689	.00000
200.620	399.540	-.07512	.09624	-.01440	-.07329	-.02244	.00059	.42440	.34445	.00000
200.600	500.160	-.07553	.09518	-.01494	-.07326	-.02202	.00060	.42019	.34838	.00000
200.600	600.050	-.07438	.09497	-.01455	-.07278	-.02113	.00059	.42167	.35554	.00000
	GRADIENT	.00000	.00000	.00000	.00000	.00000	.00000	.00000	.00000	.00000

AEDC VA422(IA17) ORB AND ET SEPARATING(ET DATA) (ATR248) (24 JUL 75)

REFERENCE DATA

SREF = 2690.0000 SQ.FT. XMRP = 1360.1000 IN. XT
LREF = 1290.3000 IN. YMRP = .0000 IN. YT
BREF = 1290.3000 IN. ZMRP = 416.4000 IN. ZT
SCALE = .0100

PARAMETRIC DATA

DLT-Y = 60.000 ALPHA = -5.000
BETA = 3.000 DLTALF = -10.000
DLTBTA = 3.000 MACH = 5.930
AILRON = .000 ELEVON = .000
GRID = 7.000

RUN NO. 306/ 0 GRADIENT INTERVAL = -5.00/ 5.00

DLT-X	DLT-Z	CN	CA	CLM	CY	CYN	CBL	XCP/L	YCP/L	CPB
.538	404.140	-.27254	.12242	-.01779	-.09129	-.01772	.00089	.51275	.42270	.00000
.455	500.820	-.25953	.11985	-.02452	-.08963	-.01760	.00051	.49233	.42112	.00000
.455	600.230	-.24479	.11274	-.03289	-.08697	-.01758	.00058	.46447	.41711	.00000
.590	750.180	-.24392	.11242	-.03265	-.08606	-.01691	.00062	.46484	.42103	.00000
.553	801.090	-.24433	.11295	-.03249	-.08715	-.01720	.00064	.46543	.42046	.00000
	GRADIENT	.00000	.00000	.00000	.00000	.00000	.00000	.00000	.00000	.00000

RUN NO. 307/ 0 GRADIENT INTERVAL = -5.00/ 5.00

DLT-X	DLT-Z	CN	CA	CLM	CY	CYN	CBL	XCP/L	YCP/L	CPB
200.560	397.950	-.26611	.11886	-.02341	-.09292	-.01679	.00094	.49687	.43210	.00000
200.490	498.510	-.26665	.12276	-.02063	-.08970	-.01834	.00068	.50430	.41554	.00000
200.540	600.020	-.25215	.11386	-.02866	-.08886	-.01808	.00051	.47892	.41616	.00000
200.590	750.190	-.24497	.11282	-.03281	-.08714	-.01732	.00064	.46476	.41948	.00000
200.460	800.120	-.24326	.11290	-.03279	-.08702	-.01729	.00065	.46416	.41952	.00000
	GRADIENT	.00000	.00000	.00000	.00000	.00000	.00000	.00000	.00000	.00000

RUN NO. 308/ 0 GRADIENT INTERVAL = -5.00/ 5.00

DLT-X	DLT-Z	CN	CA	CLM	CY	CYN	CBL	XCP/L	YCP/L	CPB
400.410	401.260	-.25466	.11385	-.03240	-.09395	-.01637	.00090	.46946	.43664	.00000
400.370	500.450	-.26379	.11871	-.02461	-.09058	-.01757	.00082	.49317	.42286	.00000
400.480	600.160	-.26154	.12163	-.02292	-.08675	-.01750	.00061	.49712	.41742	.00000
400.480	750.140	-.24359	.11352	-.03306	-.08608	-.01723	.00065	.46353	.41850	.00000
400.560	800.090	-.24307	.11295	-.03292	-.08677	-.01732	.00066	.46372	.41890	.00000
	GRADIENT	.00000	.00000	.00000	.00000	.00000	.00000	.00000	.00000	.00000

AEDC VA422(IA17) ORB AND ET SEPARATING(ET DATA) (ATR250) (24 JUL 75)

REFERENCE DATA

SREF = 2690.0000 SQ.FT. XMRP = 1380.1000 IN. XT
LREF = 1290.3000 IN. YMRP = .0000 IN. YT
BREF = 1290.3000 IN. ZMRP = 416.4000 IN. ZT
SCALE = .0100

PARAMETRIC DATA

DLT-Y = 60.000 ALPHA = -5.000
BETA = 3.000 DLTALF = -20.000
DLTBTA = 3.000 MACH = 5.930
AILRON = .000 ELEVON = .000
GRID = 7.000

RUN NO. 304/ 0 GRADIENT INTERVAL = -5.00/ 5.00

DLT-X	DLT-Z	CN	CA	CLM	CY	CYN	CBL	XCP/L	YCP/L	CPB
.546	804.040	-.51156	.14366	-.01900	-.11467	-.01086	.00048	.53239	.49216	.00000
.427	900.970	-.49339	.14721	-.02856	-.11518	-.01045	.00067	.51790	.49493	.00000
.462	1000.400	-.49294	.14671	-.02846	-.11190	-.00997	.00069	.51800	.49608	.00000
	GRADIENT	.00000	.00000	.00000	.00000	.00000	.00000	.00000	.00000	.00000

RUN NO. 300/ 0 GRADIENT INTERVAL = -5.00/ 5.00

DLT-X	DLT-Z	CN	CA	CLM	CY	CYN	CBL	XCP/L	YCP/L	CPB
200.370	754.220	-.59218	.18621	.02479	-.11610	-.00997	.00144	.58759	.49837	.00000
200.470	802.470	-.52512	.15379	-.01085	-.11468	-.00975	.00032	.54391	.49895	.00000
200.540	900.450	-.49523	.14627	-.02686	-.11270	-.01036	.00062	.52046	.49410	.00000
200.350	1000.400	-.49045	.14719	-.02873	-.11123	-.01032	.00067	.51742	.49354	.00000
	GRADIENT	.00000	.00000	.00000	.00000	.00000	.00000	.00000	.00000	.00000

RUN NO. 301/ 0 GRADIENT INTERVAL = -5.00/ 5.00

DLT-X	DLT-Z	CN	CA	CLM	CY	CYN	CBL	XCP/L	YCP/L	CPB
400.450	746.870	-.58447	.18343	.01945	-.11868	-.00889	.00148	.58159	.50603	.00000
400.560	798.480	-.52696	.15840	-.01108	-.11500	-.01113	.00078	.54366	.49070	.00000
400.390	899.970	-.50868	.14805	-.02039	-.11307	-.01031	.00056	.53033	.49462	.00000
400.340	1000.400	-.49289	.14655	-.02864	-.11161	-.01034	.00064	.51774	.49361	.00000
	GRADIENT	.00000	.00000	.00000	.00000	.00000	.00000	.00000	.00000	.00000

AEDC VA422(IA17) ORB AND ET SEPARATING(ET DATA) (ATR251) (24 JUL 75)

REFERENCE DATA

SREF =	2690.0000 SQ.FT.	XMRP =	1360.1000 IN. XT
LREF =	1290.3000 IN.	YMRP =	.0000 IN. YT
BREF =	1290.3000 IN.	ZMRP =	416.4000 IN. ZT
SCALE =	.0100		

PARAMETRIC DATA

DLT-Y =	60.000	ALPHA =	-10.000
BETA =	3.000	DLTALF =	.000
DLTBTA =	000	MACH =	5.930
AILRON =	.000	ELEVON =	.000
GRID =	8.000		

RUN NO. 321/ 0 GRADIENT INTERVAL = -5.00/ 5.00

DLT-X	DLT-Z	CN	CA	CLM	CY	CYN	CBL	XCP/L	YCP/L	CPB
.554	28.971	-.17143	.10704	-.02654	-.04243	-.01005	.00052	.45019	.39288	.00000
.537	98.805	-.16029	.10360	-.02534	-.04367	-.01004	.00039	.44789	.39766	.00000
.670	197.700	-.15650	.10410	-.02401	-.04008	-.00986	.00036	.45116	.38655	.00000
.512	298.190	-.16168	.11046	-.01850	-.03744	-.00967	.00031	.47839	.37792	.00000
.563	399.940	-.15206	.10221	-.02508	-.03792	-.00967	.00033	.44309	.38018	.00000
.607	500.120	-.14749	.10298	-.02704	-.03771	-.00972	.00032	.43028	.37827	.00000
	GRADIENT	.00000	.00000	.00000	.00000	.00000	.00000	.00000	.00000	.00000

RUN NO. 320/ 0 GRADIENT INTERVAL = -5.00/ 5.00

DLT-X	DLT-Z	CN	CA	CLM	CY	CYN	CBL	XCP/L	YCP/L	CPB
200.410	32.961	-.16486	.10139	-.03626	-.04331	-.01076	.00045	.40469	.38484	.00000
200.480	103.020	-.15999	.10451	-.02811	-.04255	-.01041	.00035	.43558	.38742	.00000
200.520	201.830	-.15316	.10163	-.02970	-.04045	-.01016	.00036	.42289	.38292	.00000
200.530	300.540	-.16054	.10554	-.02271	-.03921	-.00972	.00037	.45952	.38519	.00000
200.450	400.100	-.16183	.10977	-.01931	-.03671	-.00988	.00039	.47499	.37024	.00000
200.400	500.090	-.14948	.10168	-.02666	-.03627	-.00954	.00032	.43372	.37464	.00000
	GRADIENT	.00000	.00000	.00000	.00000	.00000	.00000	.00000	.00000	.00000

DATE 25 JUL 75 TABULATED SOURCE DATA - IA17A

AEDC VA422(IA17) ORB AND ET SEPARATING(ET DATA) (ATR252) (24 JUL 75)

REFERENCE DATA

SREF = 2690.0000 SQ.FT. XMRP = 1360.1000 IN. XT
LREF = 1290.3000 IN. YMRP = .0000 IN. YT
BREF = 1290.3000 IN. ZMRP = 416.4000 IN. ZT
SCALE = .0100

PARAMETRIC DATA

DLT-Y = 60.000 ALPHA = -10.000
BETA = 3.000 DLTALF = -10.000
DLTBTA = .000 MACH = 5.930
AILRON = .000 ELEVON = .000
GRID = 8.000

RUN NO. 329/ 0 GRADIENT INTERVAL = -5.00/ 5.00

DLT-X	DLT-Z	CN	CA	CLM	CY	CYN	CBL	XCP/L	YCP/L	CPB
.418	402.580	-.35635	.12660	-.03647	-.04946	-.00638	.00026	.48684	.46822	.00000
.466	497.530	-.37330	.13695	-.02280	-.05070	-.00586	.00030	.51567	.47766	.00000
.402	599.300	-.36767	.13262	-.02538	-.04706	-.00656	.00039	.51012	.46098	.00000
.470	700.090	-.35154	.12640	-.03399	-.04850	-.00665	.00032	.49078	.46262	.00000
.605	800.200	-.34997	.12829	-.03427	-.04717	-.00644	.00029	.48993	.46296	.00000
	GRADIENT	.00000	.00000	.00000	.00000	.00000	.00000	.00000	.00000	.00000

RUN NO. 328/ 0 GRADIENT INTERVAL = -5.00/ 5.00

DLT-X	DLT-Z	CN	CA	CLM	CY	CYN	CBL	XCP/L	YCP/L	CPB
200.490	401.860	-.34130	.12044	-.04850	-.04948	-.00706	.00036	.45906	.45867	.00000
200.560	500.730	-.36058	.12667	-.03451	-.04970	-.00577	.00035	.49147	.47729	.00000
200.350	600.470	-.37378	.13782	-.02223	-.04758	-.00638	.00027	.51679	.46464	.00000
200.480	700.200	-.36306	.13071	-.02787	-.04628	-.00642	.00027	.50471	.46145	.00000
200.530	800.290	-.34920	.12679	-.03489	-.04613	-.00621	.00026	.48854	.46428	.00000
	GRADIENT	.00000	.00000	.00000	.00000	.00000	.00000	.00000	.00000	.00000

RUN NO. 327/ 0 GRADIENT INTERVAL = -5.00/ 5.00

DLT-X	DLT-Z	CN	CA	CLM	CY	CYN	CBL	XCP/L	YCP/L	CPB
400.500	400.320	-.32221	.11555	-.05934	-.04897	-.00791	.00037	.42967	.44549	.00000
400.410	499.650	-.34658	.12138	-.04452	-.05062	-.00607	.00039	.46861	.47451	.00000
400.460	600.240	-.36420	.12983	-.03004	-.04908	-.00592	.00040	.50072	.47408	.00000
400.370	700.080	-.37202	.13780	-.02216	-.04662	-.00734	.00037	.51673	.44832	.00000
400.470	800.210	-.35898	.12846	-.02971	-.04719	-.00660	.00024	.50051	.46061	.00000
	GRADIENT	.00000	.00000	.00000	.00000	.00000	.00000	.00000	.00000	.00000

ORIGINAL PAGE IS OF POOR QUALITY

AEDC VA422(IA17) ORB AND ET SEPARATING(ET DATA) (ATR253) (24 JUL 75)

REFERENCE DATA

SREF = 2690.0000 SQ.FT. XMRP = 1360.1000 IN. XT
LREF = 1290.3000 IN. YMRP = .0000 IN. YT
BREF = 1290.3000 IN. ZMRP = 416.4000 IN. ZT
SCALE = .0100

PARAMETRIC DATA

DLT-Y = 60.000 ALPHA = -10.000
BETA = 3.000 DLTALF = .000
DLTBTA = 3.000 MACH = 5.930
AILRON = .000 ELEVON = .000
GRID = 8.000

RUN NO. 339/ 0 GRADIENT INTERVAL = -5.00/ 5.00

DLT-X	DLT-Z	CN	CA	CLM	CY	CYN	CBL	XCP/L	YCP/L	CPB
.586	31.770	-.18116	.10739	-.02534	-.08685	-.01886	.00081	.46063	.40664	.00000
.472	102.830	-.17125	.10670	-.02307	-.08631	-.01867	.00072	.46422	.40725	.00000
.483	202.210	-.16602	.10507	-.02252	-.08280	-.01911	.00075	.46357	.39712	.00000
.522	300.550	-.16819	.11009	-.01770	-.07923	-.01942	.00053	.48480	.38713	.00000
.546	400.170	-.15486	.10234	-.02541	-.07803	-.01944	.00053	.44370	.38564	.00000
.471	500.210	-.15268	.10317	-.02647	-.07806	-.01894	.00055	.43724	.38888	.00000
	GRADIENT	.00000	.00000	.00000	.00000	.00000	.00000	.00000	.00000	.00000

RUN NO. 340/ 0 GRADIENT INTERVAL = -5.00/ 5.00

DLT-X	DLT-Z	CN	CA	CLM	CY	CYN	CBL	XCP/L	YCP/L	CPB
200.590	31.452	-.17388	.10377	-.03404	-.08950	-.02035	.00076	.42158	.39951	.00000
200.530	97.397	-.16329	.10502	-.02646	-.08724	-.01908	.00067	.44513	.40554	.00000
200.540	197.180	-.15771	.10384	-.02713	-.08452	-.01885	.00073	.43817	.40252	.00000
200.450	298.450	-.16527	.10570	-.02133	-.08095	-.01872	.00068	.46818	.39683	.00000
200.650	399.850	-.16521	.10901	-.01901	-.07922	-.01921	.00050	.47795	.38897	.00000
200.490	500.180	-.15296	.10197	-.02650	-.07823	-.01911	.00051	.43732	.38768	.00000
	GRADIENT	.00000	.00000	.00000	.00000	.00000	.00000	.00000	.00000	.00000

AEDC VA422(IA17) ORB AND ET SEPARATING(ET DATA) (ATR254) (24 JUL 75)

REFERENCE DATA

SREF = 2690.0000 SQ.FT. XMRP = 1360.1000 IN. XT
LREF = 1290.3000 IN. YMRP = .0000 IN. YT
BREF = 1290.3000 IN. ZMRP = 416.4000 IN. ZT
SCALE = .0100

PARAMETRIC DATA

DLT-Y = 60.000 ALPHA = -10.000
BETA = 3.000 DLTALF = -10.000
DLTBTA = 3.000 MACH = 5.930
AILRON = .000 ELEVON = .000
GRID = 8.000

RUN NO. 333/ 0 GRADIENT INTERVAL = -5.00/ 5.00

DLT-X	DLT-Z	CN	CA	CLM	CY	CYN	CBL	XCP/L	YCP/L	CPB
.524	403.780	-.37447	.13265	-.02894	-.10476	-.01186	.00091	.50435	.47923	.00000
.533	501.740	-.38878	.13690	-.01689	-.10035	-.01366	.00092	.52798	.46324	.00000
.515	600.610	-.37519	.13428	-.02262	-.09942	-.01320	.00054	.51622	.46559	.00000
.508	700.270	-.35878	.12837	-.03176	-.09687	-.01370	.00062	.49650	.45952	.00000
.916	800.710	-.35758	.12927	-.03133	-.09912	-.01411	.00069	.49713	.45891	.00000
	GRADIENT	.00000	.00000	.00000	.00000	.00000	.00000	.00000	.00000	.00000

RUN NO. 334/ 0 GRADIENT INTERVAL = -5.00/ 5.00

DLT-X	DLT-Z	CN	CA	CLM	CY	CYN	CBL	XCP/L	YCP/L	CPB
200.500	397.560	-.35024	.12251	-.04458	-.10687	-.01281	.00081	.46941	.47459	.00000
200.420	498.870	-.37092	.12895	-.02958	-.10347	-.01253	.00102	.50263	.47374	.00000
200.350	599.990	-.38366	.13931	-.01830	-.09912	-.01422	.00084	.52501	.45814	.00000
200.460	700.190	-.37057	.13139	-.02521	-.09910	-.01357	.00053	.51081	.46264	.00000
200.530	800.190	-.35746	.12873	-.03221	-.09660	-.01381	.00067	.49539	.45846	.00000
	GRADIENT	.00000	.00000	.00000	.00000	.00000	.00000	.00000	.00000	.00000

RUN NO. 335/ 0 GRADIENT INTERVAL = -5.00/ 5.00

DLT-X	DLT-Z	CN	CA	CLM	CY	CYN	CBL	XCP/L	YCP/L	CPB
400.490	401.120	-.33564	.11805	-.05461	-.10606	-.01285	.00075	.44468	.47367	.00000
400.450	500.620	-.36038	.12454	-.03926	-.10457	-.01222	.00094	.48224	.47669	.00000
400.410	600.840	-.37659	.13216	-.02563	-.10039	-.01297	.00098	.51080	.46808	.00000
400.470	700.480	-.38132	.13940	-.01882	-.09771	-.01442	.00073	.52386	.45526	.00000
400.460	800.080	-.36545	.12908	-.02757	-.09840	-.01401	.00059	.50563	.45886	.00000
	GRADIENT	.00000	.00000	.00000	.00000	.00000	.00000	.00000	.00000	.00000

AEDC VA422(IA17) ORB AND ET SEPARATING(ET DATA) (ATR255) (24 JUL 75)

REFERENCE DATA

SREF = 2690.0000 SQ.FT. XMRP = 1360.1000 IN. XT
LREF = 1290.3000 IN. YMRP = .0000 IN. YT
BREF = 1290.3000 IN. ZMRP = 416.4000 IN. ZT
SCALE = .0100

PARAMETRIC DATA

DLT-Y = 60.000 ALPHA = -10.000
BETA = .000 DLTALF = .000
DLTBTA = .000 MACH = 5.930
AILRON = .000 ELEVON = .000
GRID = 9.000

RUN NO. 349/ 0 GRADIENT INTERVAL = -5.00/ 5.00

DLT-X	DLT-Z	CN	CA	CLM	CY	CYN	CBL	XCP/L	YCP/L	CPB
.436	28.646	-.16986	.10773	-.02889	.00468	.00039	.00025	.43952	.00000	.00000
.434	99.386	-.16162	.10642	-.02702	.00196	-.00041	.00009	.44155	.00000	.00000
.509	197.710	-.15739	.10577	-.02590	.00175	-.00067	.00003	.44339	.00000	.00000
.448	297.990	-.16086	.10843	-.02108	.00294	-.00042	.00011	.46680	.00000	.00000
.423	399.720	-.14763	.09920	-.02757	.00292	.00050	.00009	.42786	.00000	.00000
.511	500.180	-.14584	.09973	-.02858	.00309	.00052	.00005	.42143	.00000	.00000
	GRADIENT	.00000	.00000	.00000	.00000	.00000	.00000	.00000	.00000	.00000

RUN NO. 348/ 0 GRADIENT INTERVAL = -5.00/ 5.00

DLT-X	DLT-Z	CN	CA	CLM	CY	CYN	CBL	XCP/L	YCP/L	CPB
200.430	32.716	-.16505	.10314	-.03712	.00193	-.00127	.00024	.40123	.00000	.00000
200.440	102.840	-.15938	.10558	-.02993	.00127	-.00087	.00005	.42716	.00000	.00000
200.520	201.890	-.15626	.10361	-.03097	.00136	-.00077	.00004	.41987	.00000	.00000
200.480	300.560	-.16000	.10515	-.02480	.00175	-.00044	.00007	.45004	.00000	.00000
200.510	400.150	-.15905	.10597	-.02200	.00356	-.00032	.00017	.46170	.00000	.00000
200.390	500.150	-.14626	.09895	-.02869	.00374	.00036	.00008	.42132	.00000	.00000
	GRADIENT	.00000	.00000	.00000	.00000	.00000	.00000	.00000	.00000	.00000

RUN NO. 347/ 0 GRADIENT INTERVAL = -5.00/ 5.00

DLT-X	DLT-Z	CN	CA	CLM	CY	CYN	CBL	XCP/L	YCP/L	CPB
400.510	29.802	-.15359	.09963	-.04207	.00197	-.00085	.00017	.36698	.00000	.00000
400.510	100.120	-.15497	.10437	-.03226	.00077	-.00184	-.00001	.41292	.00000	.00000
400.470	197.200	-.14591	.10081	-.03628	.00361	-.00084	.00006	.38463	.00000	.00000
400.350	298.740	-.15251	.10194	-.02978	.00258	-.00037	.00006	.42190	.00000	.00000
400.430	399.920	-.15861	.10600	-.02297	.00266	.00011	.00003	.45718	.00000	.00000
400.320	500.140	-.15547	.10352	-.02375	.00362	-.00000	.00014	.45163	.00000	.00000
	GRADIENT	.00000	.00000	.00000	.00000	.00000	.00000	.00000	.00000	.00000

AEDC VA422(IA17) ORB AND ET SEPARATING(ET DATA) (ATR256) (24 JUL 75)

REFERENCE DATA

SREF = 2690.0000 SQ.FT. XMRP = 1360.1000 IN. XT
LREF = 1290.3000 IN. YMRP = .0000 IN. YT
BREF = 1290.3000 IN. ZMRP = 416.4000 IN. ZT
SCALE = .0100

PARAMETRIC DATA

DLT-Y = 60.000 ALPHA = -10.000
BETA = .000 DLTALF = -10.000
DLTBTA = .000 MACH = 5.930
AILRON = .000 ELEVON = .000
GRID = 9.000

RUN NO. 357/ 0 GRADIENT INTERVAL = -5.00/ 5.00

DLT-X	DLT-Z	CN	CA	CLM	CY	CYN	CBL	XCP/L	YCP/L	CPB
.378	402.670	-.35740	.12863	-.03774	.00587	.00048	.00032	.48457	.00000	.00000
.466	500.450	-.37054	.13709	-.02481	.00330	.00049	.00023	.51156	.00000	.00000
.388	599.350	-.36582	.13231	-.02598	.00569	-.00030	.00042	.50873	.00000	.00000
.431	699.970	-.34710	.12622	-.03579	.00550	.00001	.00035	.48631	.00000	.00000
.418	800.170	-.34674	.12718	-.03577	.00688	.00009	.00032	.48626	.54927	.00000
	GRADIENT	.00000	.00000	.00000	.00000	.00000	.00000	.00000	.00000	.00000

RUN NO. 356/ 0 GRADIENT INTERVAL = -5.00/ 5.00

DLT-X	DLT-Z	CN	CA	CLM	CY	CYN	CBL	XCP/L	YCP/L	CPB
200.420	401.830	-.34172	.12133	-.04954	.00524	-.00091	.00026	.45706	.00000	.00000
200.390	500.870	-.35865	.12865	-.03585	.00388	.00049	.00030	.48850	.00000	.00000
200.310	600.420	-.37191	.14108	-.02195	.00506	-.00015	.00026	.51712	.00000	.00000
200.460	700.250	-.35913	.13041	-.02907	.00667	-.00007	.00034	.50179	.56520	.00000
200.430	800.230	-.34568	.12591	-.03660	.00710	.00012	.00030	.48437	.54635	.00000
	GRADIENT	.00000	.00000	.00000	.00000	.00000	.00000	.00000	.00000	.00000

RUN NO. 355/ 0 GRADIENT INTERVAL = -5.00/ 5.00

DLT-X	DLT-Z	CN	CA	CLM	CY	CYN	CBL	XCP/L	YCP/L	CPB
400.390	400.330	-.32525	.11557	-.05856	.00734	-.00104	.00014	.43256	.65723	.00000
400.410	499.480	-.34565	.12253	-.04414	.00578	-.00009	.00020	.46913	.00000	.00000
400.390	600.150	-.36257	.13190	-.03006	.00523	.00061	.00017	.50042	.00000	.00000
400.390	700.260	-.36963	.13840	-.02297	.00639	-.00050	.00041	.51493	.00000	.00000
400.400	800.240	-.35361	.12700	-.03180	.00609	.00021	.00035	.49552	.00000	.00000
	GRADIENT	.00000	.00000	.00000	.00000	.00000	.00000	.00000	.00000	.00000

ORIGINAL PAGE IS OF POOR QUALITY

AEDC VA422(IA17) ORB AND ET SEPARATING(ET DATA) (ATR257) (24 JUL 75)

REFERENCE DATA

SREF = 2690.0000 SQ.FT. XMRP = 1360.1000 IN. XT
LREF = 1290.3000 IN. YMRP = .0000 IN. YT
BREF = 1290.3000 IN. ZMRP = 416.4000 IN. ZT
SCALE = .0100

PARAMETRIC DATA

DLT-Y = 60.000 ALPHA = -10.000
BETA = .000 DLTALF = .000
DLTBTA = 3.000 MACH = 5.930
AILRON = .000 ELEVON = .000
GRID = 9.000

RUN NO. 367/ 0 GRADIENT INTERVAL = -5.00/ 5.00

DLT-X	DLT-Z	CN	CA	CLM	CY	CYN	CBL	XCP/L	YCP/L	CPB
.370	31.559	-.17763	.10918	-.02798	-.03865	-.00891	.00062	.44831	.39730	.00000
.484	102.840	-.16735	.10496	-.02697	-.04072	-.00965	.00042	.44577	.39285	.00000
.514	202.320	-.16314	.10538	-.02604	-.03878	-.00958	.00043	.44683	.38580	.00000
.597	300.590	-.16588	.11087	-.01990	-.03744	-.01062	.00038	.47451	.36014	.00000
.519	400.140	-.15273	.10097	-.02639	-.03588	-.00951	.00031	.43764	.37316	.00000
.440	500.240	-.14919	.10092	-.02748	-.03609	-.00933	.00032	.42966	.37779	.00000
	GRADIENT	.00000	.00000	.00000	.00000	.00000	.00000	.00000	.00000	.00000

RUN NO. 368/ 0 GRADIENT INTERVAL = -5.00/ 5.00

DLT-X	DLT-Z	CN	CA	CLM	CY	CYN	CBL	XCP/L	YCP/L	CPB
200.370	31.606	-.16820	.10312	-.03793	-.04031	-.00960	.00049	.40078	.39199	.00000
200.450	100.270	-.16207	.10623	-.02895	-.04152	-.01041	.00038	.43353	.38325	.00000
200.520	197.480	-.15482	.10412	-.03067	-.04005	-.00982	.00040	.41993	.38708	.00000
200.490	298.400	-.16206	.10635	-.02371	-.03907	-.00979	.00042	.45614	.38333	.00000
200.510	399.780	-.16282	.10880	-.02020	-.03635	-.01029	.00041	.47166	.36054	.00000
200.490	500.200	-.14937	.10051	-.02744	-.03651	-.00936	.00031	.43001	.37912	.00000
	GRADIENT	.00000	.00000	.00000	.00000	.00000	.00000	.00000	.00000	.00000

AEDC VA422(IA17) ORB AND ET SEPARATING(ET DATA) (ATR25B) (24 JUL 75)

REFERENCE DATA

SREF = 2690.0000 SQ.FT. XMRP = 1360.1000 IN. XT
LREF = 1290.3000 IN. YMRP = .0000 IN. YT
BREF = 1290.3000 IN. ZMRP = 416.4000 IN. ZT
SCALE = .0100

PARAMETRIC DATA

DLT-Y = 60.000 ALPHA = -10.000
BETA = .000 DLTALF = -10.000
DLTBTA = 3.000 MACH = 5.930
AILRON = .000 ELEVON = .000
GRID = 9.000

RUN NO. 361/ 0 GRADIENT INTERVAL = -5.00/ 5.00

DLT-X	DLT-Z	CN	CA	CLM	CY	CYN	CBL	XCP/L	YCP/L	CPB
.476	403.570	-.36458	.12581	-.03691	-.04805	-.00556	.00045	.48760	.47744	.00000
.374	501.500	-.37884	.13668	-.02219	-.04747	-.00632	.00032	.51743	.46531	.00000
.396	600.470	-.36892	.13225	-.02605	-.04536	-.00662	.00030	.50900	.45637	.00000
.449	700.270	-.35111	.12497	-.03520	-.04602	-.00634	.00027	.48831	.46209	.00000
.734	800.680	-.35073	.12570	-.03476	-.04790	-.00665	.00030	.48909	.46135	.00000
	GRADIENT	.00000	.00000	.00000	.00000	.00000	.00000	.00000	.00000	.00000

RUN NO. 362/ 0 GRADIENT INTERVAL = -5.00/ 5.00

DLT-X	DLT-Z	CN	CA	CLM	CY	CYN	CBL	XCP/L	YCP/L	CPB
200.420	397.980	-.34463	.12073	-.04899	-.04890	-.00607	.00047	.45902	.47166	.00000
200.410	498.680	-.36197	.12696	-.03470	-.04835	-.00593	.00043	.49137	.47259	.00000
200.290	600.110	-.37506	.13713	-.02208	-.04770	-.00695	.00028	.51722	.45653	.00000
200.450	700.080	-.36324	.12927	-.02875	-.04582	-.00674	.00022	.50304	.45552	.00000
200.440	800.150	-.35027	.12485	-.03582	-.04485	-.00630	.00027	.48690	.46026	.00000
	GRADIENT	.00000	.00000	.00000	.00000	.00000	.00000	.00000	.00000	.00000

RUN NO. 363/ 0 GRADIENT INTERVAL = -5.00/ 5.00

DLT-X	DLT-Z	CN	CA	CLM	CY	CYN	CBL	XCP/L	YCP/L	CPB
400.360	401.220	-.32760	.11585	-.05957	-.04936	-.00736	.00041	.43131	.45418	.00000
400.440	500.690	-.35085	.12126	-.04468	-.04999	-.00603	.00040	.46937	.47408	.00000
400.470	600.690	-.36703	.12850	-.03069	-.04770	-.00567	.00036	.49993	.47535	.00000
400.350	700.360	-.37209	.13623	-.02300	-.04489	-.00771	.00031	.51515	.43835	.00000
400.460	800.140	-.35832	.12631	-.03108	-.04700	-.00664	.00026	.49773	.45968	.00000
	GRADIENT	.00000	.00000	.00000	.00000	.00000	.00000	.00000	.00000	.00000

AEDC VA422(IA17) ORB AND ET SEPARATING(ET DATA) (ATR259) (24 JUL 75)

REFERENCE DATA

SREF = 2690.0000 SQ.FT. XMRP = 1360.1000 IN. XT
LREF = 1290.3000 IN. YMRP = .0000 IN. YT
BREF = 1290.3000 IN. ZMRP = 416.4000 IN. ZT
SCALE = .0100

PARAMETRIC DATA

DLT-Y = 60.000 ALPHA = -10.000
BETA = .000 DLTALF = .000
DLTBTA = 3.000 MACH = 5.930
AILRON = .000 ELEVON = -20.000
GRID = 10.000

RUN NO. 393/ 0 GRADIENT INTERVAL = -5.00/ 5.00

DLT-X	DLT-Z	CN	CA	CLM	CY	CYN	CBL	XCP/L	YCP/L	CPB
.410	31.483	-.17640	.10911	-.02793	-.03912	-.00879	.00062	.44772	.40144	.00000
.500	102.750	-.16718	.10524	-.02690	-.03999	-.00942	.00041	.44592	.39378	.00000
.542	202.350	-.16312	.10524	-.02591	-.03885	-.00957	.00042	.44737	.38623	.00000
.495	300.660	-.16526	.11036	-.01984	-.03655	-.01030	.00036	.47445	.36150	.00000
.520	400.150	-.15192	.10103	-.02620	-.03636	-.00953	.00029	.43784	.37514	.00000
.443	500.170	-.14774	.10100	-.02737	-.03626	-.00935	.00029	.42892	.37813	.00000
	GRADIENT	.00000	.00000	.00000	.00000	.00000	.00000	.00000	.00000	.00000

RUN NO. 394/ 0 GRADIENT INTERVAL = -5.00/ 5.00

DLT-X	DLT-Z	CN	CA	CLM	CY	CYN	CBL	XCP/L	YCP/L	CPB
400.440	32.761	-.15565	.10085	-.04122	-.04311	-.01036	.00047	.37333	.39054	.00000
400.510	103.250	-.15989	.10594	-.03140	-.04075	-.01093	.00032	.42112	.37102	.00000
400.420	201.570	-.14979	.10065	-.03584	-.03948	-.00996	.00039	.39119	.38211	.00000
400.660	300.630	-.15765	.10219	-.02913	-.03873	-.00951	.00039	.42925	.38680	.00000
400.600	400.250	-.16270	.10609	-.02170	-.03738	-.00928	.00037	.46515	.38485	.00000
400.430	500.300	-.15941	.10553	-.02200	-.03613	-.00981	.00037	.46191	.36871	.00000
	GRADIENT	.00000	.00000	.00000	.00000	.00000	.00000	.00000	.00000	.00000

AEDC VA422(IA17) ORB AND ET SEPARATING(ET DATA) (ATR260) (24 JUL 75)

REFERENCE DATA

SREF = 2690.0000 SQ.FT. XMRP = 1360.1000 IN. XT
LREF = 1290.3000 IN. YMRP = .0000 IN. YT
BREF = 1290.3000 IN. ZMRP = 416.4000 IN. ZT
SCALE = .0100

PARAMETRIC DATA

DLT-Y = 60.000 ALPHA = -10.000
BETA = .000 DLTALF = -10.000
DLTBTA = 3.000 MACH = 5.930
AILRON = .000 ELEVON = -20.000
GRID = 10.000

RUN NO. 391/ 0 GRADIENT INTERVAL = -5.00/ 5.00

DLT-X	DLT-Z	CN	CA	CLM	CY	CYN	CBL	XCP/L	YCP/L	CPB
.432	403.720	-.36304	.12654	-.03688	-.04971	-.00615	.00043	.48738	.47190	.00000
.571	501.520	-.37595	.13786	-.02257	-.04901	-.00646	.00032	.51640	.46625	.00000
.397	600.530	-.36822	.13290	-.02572	-.04540	-.00659	.00030	.50954	.45697	.00000
.401	700.230	-.35024	.12530	-.03494	-.04627	-.00634	.00027	.48865	.46260	.00000
.712	800.150	-.34890	.12614	-.03458	-.04771	-.00672	.00028	.48909	.45999	.00000
	GRADIENT	.00000	.00000	.00000	.00000	.00000	.00000	.00000	.00000	.00000

RUN NO. 392/ 0 GRADIENT INTERVAL = -5.00/ 5.00

DLT-X	DLT-Z	CN	CA	CLM	CY	CYN	CBL	XCP/L	YCP/L	CPB
400.410	397.160	-.32374	.11470	-.06011	-.04883	-.00702	.00042	.42862	.45796	.00000
400.460	499.500	-.34722	.12066	-.04490	-.04833	-.00578	.00040	.46800	.47485	.00000
400.350	600.180	-.36530	.12888	-.03036	-.04910	-.00597	.00034	.50028	.47344	.00000
400.390	700.160	-.37123	.13684	-.02268	-.04588	-.00758	.00033	.51566	.44314	.00000
400.500	800.250	-.35693	.12663	-.03093	-.04609	-.00630	.00025	.49780	.46288	.00000
	GRADIENT	.00000	.00000	.00000	.00000	.00000	.00000	.00000	.00000	.00000

AEDC VA422(IA17) ORB AND ET SEPARATING(ET DATA) (ATR261) (24 JUL 75)

REFERENCE DATA

SREF = 2690.0000 SQ.FT. XMRP = 1360.1000 IN. XT
LREF = 1290.3000 IN. YMRP = .0000 IN. YT
BREF = 1290.3000 IN. ZMRP = 416.4000 IN. ZT
SCALE = .0100

PARAMETRIC DATA

DLT-Y = 60.000 ALPHA = -5.000
BETA = .000 DLTALF = .000
DLTBTA = 3.000 MACH = 5.930
AILRON = .000 ELEVON = -20.000
GRID = 11.000

RUN NO. 404/ 0 GRADIENT INTERVAL = -5.00/ 5.00

DLT-X	DLT-Z	CN	CA	CLM	CY	CYN	CBL	XCP/L	YCP/L	CPB
.658	19.598	-.10227	.09903	-.01191	-.03801	-.00919	.00049	.47698	.38944	.00000
.571	101.590	-.09204	.09879	-.00860	-.03618	-.00951	.00036	.49309	.37475	.00000
.531	201.990	-.08407	.10395	-.00619	-.03466	-.01109	.00031	.50693	.33481	.00000
.526	301.280	-.07675	.10028	-.01197	-.03376	-.01140	.00031	.44942	.32248	.00000
.516	400.240	-.07359	.09852	-.01568	-.03499	-.01159	.00033	.40951	.32689	.00000
.617	500.230	-.07593	.09634	-.01688	-.03590	-.01178	.00034	.40304	.32912	.00000
.503	600.230	-.07346	.09642	-.01546	-.03432	-.01084	.00033	.41130	.33769	.00000
	GRADIENT	.00000	.00000	.00000	.00000	.00000	.00000	.00000	.00000	.00000

RUN NO. 405/ 0 GRADIENT INTERVAL = -5.00/ 5.00

DLT-X	DLT-Z	CN	CA	CLM	CY	CYN	CBL	XCP/L	YCP/L	CPB
400.450	20.211	-.09926	.09595	-.02655	-.04153	-.01052	.00041	.37149	.38137	.00000
400.540	100.180	-.09774	.09921	-.01082	-.03994	-.01050	.00036	.48098	.37468	.00000
400.560	197.520	-.07956	.09916	-.01096	-.03755	-.01010	.00033	.46211	.37042	.00000
400.460	298.190	-.08194	.10282	-.00839	-.03718	-.01189	.00034	.48678	.33493	.00000
400.520	399.990	-.08085	.10244	-.01128	-.03523	-.01250	.00031	.46084	.31051	.00000
400.480	500.130	-.07426	.09778	-.01583	-.03503	-.01172	.00034	.40943	.32461	.00000
400.510	600.110	-.07363	.09515	-.01627	-.03470	-.01121	.00034	.40399	.33267	.00000
	GRADIENT	.00000	.00000	.00000	.00000	.00000	.00000	.00000	.00000	.00000

AEDC VA422(IA17) ORB AND ET SEPARATING(ET DATA) (ATR262) (24 JUL 75)

REFERENCE DATA

SREF = 2690.0000 SQ.FT. XMRP = 1360.1000 IN. XT
LREF = 1290.3000 IN. YMRP = .0000 IN. YT
BREF = 1290.3000 IN. ZMRP = 416.4000 IN. ZT
SCALE = .0100

PARAMETRIC DATA

DLT-Y = 60.000 ALPHA = -5.000
BETA = .000 DLTALF = -10.000
DLTBTA = 3.000 MACH = 5.930
AILRON = .000 ELEVON = -20.000
GRID = 11.000

RUN NO. 402/ 0 GRADIENT INTERVAL = -5.00/ 5.00

DLT-X	DLT-Z	CN	CA	CLM	CY	CYN	CBL	XCP/L	YCP/L	CPB
.519	404.090	-.27028	.12752	-.02007	-.04426	-.00842	.00040	.50647	.42543	.00000
.466	500.930	-.25785	.12112	-.02792	-.04335	-.00978	.00040	.48268	.40067	.00000
.622	600.360	-.24205	.11322	-.03612	-.04377	-.00899	.00032	.45409	.41483	.00000
.467	750.170	-.23901	.11278	-.03457	-.04127	-.00807	.00033	.45730	.42181	.00000
.389	800.680	-.24040	.11261	-.03428	-.04371	-.00856	.00035	.45871	.42157	.00000
	GRADIENT	.00000	.00000	.00000	.00000	.00000	.00000	.00000	.00000	.00000

RUN NO. 403/ 0 GRADIENT INTERVAL = -5.00/ 5.00

DLT-X	DLT-Z	CN	CA	CLM	CY	CYN	CBL	XCP/L	YCP/L	CPB
400.400	396.900	-.24639	.11315	-.03776	-.04686	-.00896	.00040	.45127	.42472	.00000
400.370	499.560	-.25820	.12021	-.02923	-.04426	-.00872	.00038	.47925	.42068	.00000
400.450	599.970	-.26011	.12435	-.02460	-.04233	-.00974	.00046	.49226	.39758	.00000
400.430	750.180	-.24049	.11294	-.03487	-.04212	-.00831	.00034	.45705	.42043	.00000
400.460	800.090	-.23853	.11253	-.03476	-.04326	-.00818	.00035	.45652	.42625	.00000
	GRADIENT	.00000	.00000	.00000	.00000	.00000	.00000	.00000	.00000	.00000

AEDC VA422(IA17) ORB AND ET SEPARATING(ET DATA) (ATR264) (24 JUL 75)

REFERENCE DATA

SREF = 2690.0000 SQ.FT. XMRP = 1360.1000 IN. XT
LREF = 1290.3000 IN. YMRP = .0000 IN. YT
BREF = 1290.3000 IN. ZMRP = 416.4000 IN. ZT
SCALE = .0100

PARAMETRIC DATA

DLT-Y = 60.000 ALPHA = -5.000
BETA = .000 DLTALF = -20.000
DLTBTA = 3.000 MACH = 5.930
AILRON = .000 ELEVON = -20.000
GRID = 11.000

RUN NO. 407/ 0 GRADIENT INTERVAL = -5.00/ 5.00

DLT-X	DLT-Z	CN	CA	CLM	CY	CYN	CBL	XCP/L	YCP/L	CPB
.391	804.700	-.51134	.14732	-.01920	-.05396	-.00541	.00037	.53211	.48824	.00000
.513	900.800	-.48515	.14763	-.03209	-.05153	-.00567	.00049	.51213	.48149	.00000
.400	1000.400	-.48460	.14686	-.03198	-.05109	-.00539	.00048	.51224	.48468	.00000
	GRADIENT	.00000	.00000	.00000	.00000	.00000	.00000	.00000	.00000	.00000

AEDC VA422(1A17) ORB AND ET SEPARATING(ET DATA) (ATR264) (24 JUL 75)

REFERENCE DATA

SREF = 2690.0000 SQ.FT. XMRP = 1360.1000 IN. XT
LREF = 1290.3000 IN. YMRP = .0000 IN. YT
BREF = 1290.3000 IN. ZMRP = 416.4000 IN. ZT
SCALE = .0100

PARAMETRIC DATA

DLT-Y = 60.000 ALPHA = -5.000
BETA = .000 DLTALF = -20.000
DLTBTA = 3.000 MACH = 5.930
AILRON = .000 ELEVON = -20.000
GRID = 11.000

RUN NO. 401/ 0 GRADIENT INTERVAL = -5.00/ 5.00

DLT-X	DLT-Z	CN	CA	CLM	CY	CYN	CBL	XCP/L	YCP/L	CPB
400.530	750.980	-.51926	.15658	-.01729	-.05502	-.00432	.00049	.53508	.50353	.00000
400.380	800.490	-.51576	.16167	-.01595	-.05234	-.00672	.00046	.53673	.46866	.00000
400.350	900.430	-.49738	.15039	-.02455	-.05317	-.00557	.00030	.52386	.48519	.00000
400.340	1000.400	-.48058	.14482	-.03332	-.05157	-.00511	.00039	.50991	.48907	.00000
	GRADIENT	.00000	.00000	.00000	.00000	.00000	.00000	.00000	.00000	.00000

AEDC VA422(1A17) ORB AND ET SEPARATING(ET DATA) (ATR265) (24 JUL 75)

REFERENCE DATA

SREF = 2690.0000 SQ.FT. XMRP = 1360.1000 IN. XT
LREF = 1290.3000 IN. YMRP = .0000 IN. YT
BREF = 1290.3000 IN. ZMRP = 416.4000 IN. ZT
SCALE = .0100

PARAMETRIC DATA

DLT-Y = 60.000 ALPHA = 5.000
BETA = .000 DLTALF = .000
DLTBTA = 3.000 MACH = 5.930
AILRON = .000 ELEVON = -20.000
GRID = 12.000

RUN NO. 417/ 0 GRADIENT INTERVAL = -5.00/ 5.00

DLT-X	DLT-Z	CN	CA	CLM	CY	CYN	CBL	XCP/L	YCP/L	CPB
.616	19.231	.01678	.09401	.02804	-.03571	-.00957	.00049	-.60877	.37120	.00000
.614	97.915	.02663	.09256	.02648	-.03174	-.01000	.00044	-.13627	.33824	.00000
.512	199.190	.03909	.09223	.02725	-.03198	-.01109	.00012	.07126	.31612	.00000
.702	300.230	.05506	.08837	.01905	-.03439	-.01071	.00034	.31662	.34085	.00000
.669	402.100	.05547	.08916	.01884	-.03415	-.01047	.00034	.32102	.34419	.00000
.757	501.150	.05504	.08903	.01857	-.03450	-.01034	.00034	.32265	.34902	.00000
.755	598.290	.05630	.08982	.01941	-.03457	-.01044	.00035	.31749	.34727	.00000
	GRADIENT	.00000	.00000	.00000	.00000	.00000	.00000	.00000	.00000	.00000

RUN NO. 418/ 0 GRADIENT INTERVAL = -5.00/ 5.00

DLT-X	DLT-Z	CN	CA	CLM	CY	CYN	CBL	XCP/L	YCP/L	CPB
400.560	19.975	.00958	.09616	.01149	-.04330	-.00836	.00037	-.27991	.42338	.00000
400.410	98.532	.01331	.09565	.02817	-.03516	-.00857	.00038	-.92105	.38810	.00000
400.640	199.920	.02735	.09685	.03319	-.03107	-.01169	.00006	-.28941	.29537	.00000
400.570	298.790	.05315	.08731	.02015	-.03320	-.01067	.00030	.29345	.33382	.00000
400.620	397.840	.05601	.08845	.01910	-.03417	-.01047	.00033	.32012	.34422	.00000
400.630	499.470	.05546	.08955	.01913	-.03496	-.01056	.00035	.31729	.34724	.00000
400.620	599.850	.05581	.08909	.02016	-.03482	-.01068	.00035	.30598	.34413	.00000
	GRADIENT	.00000	.00000	.00000	.00000	.00000	.00000	.00000	.00000	.00000

AEDC VA422(IA17) ORB AND ET SEPARATING(ET DATA) (ATR266) (24 JUL 75)

REFERENCE DATA

SREF = 2690.0000 SQ.FT. XMRP = 1360.1000 IN. XT
LREF = 1290.3000 IN. YMRP = .0000 IN. YT
BREF = 1290.3000 IN. ZMRP = 416.4000 IN. ZT
SCALE = .0100

PARAMETRIC DATA

DLT-Y = 60.000 ALPHA = 5.000
BETA = .000 DLTALF = -10.000
DLTBTA = 3.000 MACH = 5.930
AILRON = .000 ELEVON = -20.000
GRID = 12.000

RUN NO. 415/ 0 GRADIENT INTERVAL = -5.00/ 5.00

DLT-X	DLT-Z	CN	CA	CLM	CY	CYN	CBL	XCP/L	YCP/L	CPB
.523	401.220	-.08787	.09946	.00005	-.03099	-.01039	.00018	.55878	.31283	.00000
.494	502.890	-.06608	.09381	-.01393	-.03209	-.01064	.00030	.41107	.32677	.00000
.551	601.710	-.06521	.09456	-.01436	-.03196	-.01057	.00031	.40446	.32724	.00000
.660	749.950	-.06399	.09705	-.01354	-.03282	-.01088	.00031	.41047	.32667	.00000
-.662	802.940	-.06602	.09765	-.01426	-.03221	-.01060	.00030	.40743	.32839	.00000
	GRADIENT	.00000	.00000	.00000	.00000	.00000	.00000	.00000	.00000	.00000

RUN NO. 416/ 0 GRADIENT INTERVAL = -5.00/ 5.00

DLT-X	DLT-Z	CN	CA	CLM	CY	CYN	CBL	XCP/L	YCP/L	CPB
400.600	398.040	-.11368	.10782	.01358	-.03182	-.01055	.00008	.64179	.32672	.00000
400.450	497.570	-.06802	.09371	-.01079	-.03100	-.01069	.00023	.44755	.31746	.00000
400.590	599.280	-.06392	.09379	-.01354	-.03274	-.01079	.00031	.41033	.32815	.00000
400.630	750.050	-.06395	.09718	-.01303	-.03442	-.01140	.00031	.41604	.32701	.00000
400.510	800.100	-.06407	.09789	-.01333	-.03356	-.01139	.00031	.41300	.32128	.00000
	GRADIENT	.00000	.00000	.00000	.00000	.00000	.00000	.00000	.00000	.00000

AEDC VA422(IA17) ORB AND ET SEPARATING(ET DATA) (ATR268) (24 JUL 75)

REFERENCE DATA

SREF = 2690.0000 SQ.FT. XMRP = 1360.1000 IN. XT
LREF = 1290.3000 IN. YMRP = .0000 IN. YT
BREF = 1290.3000 IN. ZMRP = 416.4000 IN. ZT
SCALE = .0100

PARAMETRIC DATA

DLT-Y = 60.000 ALPHA = 5.000
BETA = .000 DLTALF = -20.000
DLTBTA = 3.000 MACH = 5.930
AILRON = .000 ELEVON = -20.000
GRID = 12.000

RUN NO. 420/ 0 GRADIENT INTERVAL = -5.00/ 5.00

DLT-X	DLT-Z	CN	CA	CLM	CY	CYN	CBL	XCP/L	YCP/L	CPB
.512	801.340	-.22861	.11262	-.03462	-.03830	-.00806	.00031	.45253	.41136	.00000
.520	900.210	-.23009	.11389	-.03608	-.03707	-.00791	.00030	.44878	.40936	.00000
.589	1000.100	-.23146	.11416	-.03634	-.03950	-.00785	.00031	.44867	.41944	.00000
	GRADIENT	.00000	.00000	.00000	.00000	.00000	.00000	.00000	.00000	.00000

ORIGINAL PAGE IS OF POOR QUALITY

AEDC VA422(IA17) ORB AND ET SEPARATING(ET DATA) (ATR268) (24 JUL 75)

REFERENCE DATA

SREF = 2690.0000 SQ.FT. XMRP = 1360.1000 IN. XT
LREF = 1290.3000 IN. YMRP = .0000 IN. YT
BREF = 1290.3000 IN. ZMRP = 416.4000 IN. ZT
SCALE = .0100

PARAMETRIC DATA

DLT-Y = 60.000 ALPHA = 5.000
BETA = .000 DLTALF = -20.000
DLTBTA = 3.000 MACH = 5.930
AILRON = .000 ELEVON = -20.000
GRID = 12.000

RUN NO. 414/ 0 GRADIENT INTERVAL = -5.00/ 5.00

DLT-X	DLT-Z	CN	CA	CLM	CY	CYN	CBL	XCP/L	YCP/L	CPB
400.440	750.300	-.23262	.11215	-.03111	-.03852	-.00824	.00027	.46492	.40895	.00000
400.430	800.270	-.22830	.11339	-.03448	-.03934	-.00836	.00031	.45281	.40981	.00000
400.480	900.110	-.22920	.11478	-.03618	-.04108	-.00878	.00033	.44806	.40901	.00000
400.440	1000.200	-.23207	.11508	-.03728	-.04097	-.00866	.00033	.44611	.41072	.00000
	GRADIENT	.00000	.00000	.00000	.00000	.00000	.00000	.00000	.00000	.00000

AEDC VA422(IA17) ORB AND ET SEPARATING(ET DATA) (ATR269) (24 JUL 75)

REFERENCE DATA

SREF = 2690.0000 SQ.FT. XMRP = 1360.1000 IN. XT
LREF = 1290.3000 IN. YMRP = .0000 IN. YT
BREF = 1290.3000 IN. ZMRP = 416.4000 IN. ZT
SCALE = .0100

PARAMETRIC DATA

DLT-Y = 60.000 ALPHA = .000
BETA = .000 DLTALF = .000
DLTBTA = 3.000 MACH = 5.930
AILRON = .000 ELEVON = -20.000
GRID = 13.000

RUN NO. 430/ 0 GRADIENT INTERVAL = -5.00/ 5.00

DLT-X	DLT-Z	CN	CA	CLM	CY	CYN	CBL	XCP/L	YCP/L	CPB
.513	18.804	-.03957	.09601	.00780	-.03521	-.00961	.00040	.69601	.36756	.00000
.545	99.549	-.03396	.09479	.00787	-.03380	-.00999	.00040	.72014	.35186	.00000
.568	200.550	-.02249	.09719	.01089	-.03215	-.01177	.00017	.89663	.30255	.00000
.591	302.190	-.00697	.09113	.00188	-.03246	-.01125	.00031	.74642	.31612	.00000
.565	400.890	-.00622	.09373	.00279	-.03316	-.01143	.00031	.87179	.31763	.00000
.587	500.060	-.00761	.09487	.00234	-.03423	-.01165	.00032	.77339	.32057	.00000
.514	600.080	-.00885	.09532	.00168	-.03314	-.01157	.00032	.69122	.31437	.00000
	GRADIENT	.00000	.00000	.00000	.00000	.00000	.00000	.00000	.00000	.00000

RUN NO. 431/ 0 GRADIENT INTERVAL = -5.00/ 5.00

DLT-X	DLT-Z	CN	CA	CLM	CY	CYN	CBL	XCP/L	YCP/L	CPB
400.560	19.988	-.04748	.09692	-.00653	-.04163	-.01040	.00034	.46222	.38385	.00000
400.450	100.210	-.04089	.09693	.00877	-.03805	-.00956	.00035	.70824	.38288	.00000
400.520	198.780	-.02709	.09490	.01125	-.03421	-.01113	.00026	.84844	.33099	.00000
400.550	297.840	-.01533	.09501	.00775	-.03303	-.01152	.00022	.91149	.31467	.00000
400.650	399.070	-.00621	.09217	.00319	-.03330	-.01160	.00031	.91680	.31493	.00000
400.520	500.080	-.00703	.09429	.00294	-.03484	-.01239	.00034	.85067	.30995	.00000
400.500	600.130	-.00978	.09603	.00159	-.03542	-.01262	.00034	.67182	.30947	.00000
	GRADIENT	.00000	.00000	.00000	.00000	.00000	.00000	.00000	.00000	.00000

AEDC VA422(IA17) ORB AND ET SEPARATING(ET DATA) (ATR270) (24 JUL 75)

REFERENCE DATA

SREF = 2690.0000 SQ.FT. XMRP = 1360.1000 IN. XT
LREF = 1290.3000 IN. YMRP = .0000 IN. YT
BREF = 1290.3000 IN. ZMRP = 416.4000 IN. ZT
SCALE = .0100

PARAMETRIC DATA

DLT-Y = 60.000 ALPHA = .000
BETA = .000 DLTALF = -10.000
DLTBTA = 3.000 MACH = 5.930
AILRON = .000 ELEVON = -20.000
GRID = 13.000

RUN NO. 428/ 0 GRADIENT INTERVAL = -5.00/ 5.00

DLT-X	DLT-Z	CN	CA	CLM	CY	CYN	CBL	XCP/L	YCP/L	CPB
.514	403.700	-.16493	.11483	-.01137	-.03440	-.00986	.00034	.51017	.35819	.00000
.436	501.810	-.14425	.10408	-.02527	-.03659	-.01025	.00029	.43598	.36273	.00000
.445	600.180	-.14287	.10586	-.02824	-.03496	-.00941	.00029	.42025	.37026	.00000
.533	749.990	-.14658	.10524	-.02903	-.03669	-.00985	.00031	.41996	.37071	.00000
-.205	801.820	-.14838	.10465	-.02933	-.03849	-.01022	.00031	.42025	.37284	.00000
	GRADIENT	.00000	.00000	.00000	.00000	.00000	.00000	.00000	.00000	.00000

RUN NO. 429/ 0 GRADIENT INTERVAL = -5.00/ 5.00

DLT-X	DLT-Z	CN	CA	CLM	CY	CYN	CBL	XCP/L	YCP/L	CPB
400.350	396.770	-.17155	.11234	-.00987	-.03771	-.00883	.00032	.51816	.39470	.00000
400.370	498.370	-.15865	.11289	-.01495	-.03666	-.01029	.00035	.49250	.36228	.00000
400.410	600.310	-.14460	.10494	-.02639	-.03725	-.01034	.00032	.43083	.36431	.00000
400.430	750.260	-.14561	.10506	-.02914	-.03817	-.01053	.00034	.41852	.36571	.00000
400.450	800.180	-.14698	.10577	-.02879	-.03693	-.01021	.00032	.42149	.36520	.00000
	GRADIENT	.00000	.00000	.00000	.00000	.00000	.00000	.00000	.00000	.00000

AEDC VA422(IA17) ORB AND ET SEPARATING(ET DATA) (ATR272) (24 JUL 75)

REFERENCE DATA

SREF = 2690.0000 SQ.FT. XMRP = 1360.1000 IN. XT
LREF = 1290.3000 IN. YMRP = .0000 IN. YT
BREF = 1290.3000 IN. ZMRP = 416.4000 IN. ZT
SCALE = .0100

PARAMETRIC DATA

DLT-Y = 60.000 ALPHA = .000
BETA = .000 DLTALF = -20.000
DLTBTA = 3.000 MACH = 5.930
AILRON = .000 ELEVON = -20.000
GRID = 13.000

RUN NO. 433/ 0 GRADIENT INTERVAL = -5.00/ 5.00

DLT-X	DLT-Z	CN	CA	CLM	CY	CYN	CBL	XCP/L	YCP/L	CPB
.531	801.960	-.34680	.12805	-.04012	-.04722	-.00708	.00027	.47752	.45357	.00000
.522	900.460	-.34642	.12854	-.03980	-.04687	-.00690	.00025	.47809	.45545	.00000
.595	1000.300	-.34938	.12803	-.03709	-.04579	-.00640	.00025	.48418	.46071	.00000
	GRADIENT	.00000	.00000	.00000	.00000	.00000	.00000	.00000	.00000	.00000

AEDC VA422(IA17) ORB AND ET SEPARATING(ET DATA) (ATR272) (24 JUL 75)

REFERENCE DATA

SREF = 2690.0000 SQ.FT. XMRP = 1360.1000 IN. XT
LREF = 1290.3000 IN. YMRP = .0000 IN. YT
BREF = 1290.3000 IN. ZMRP = 416.4000 IN. ZT
SCALE = .0100

PARAMETRIC DATA

DLT-Y = 60.000 ALPHA = .000
BETA = .000 DLTALF = -20.000
DLTBTA = 3.000 MACH = 5.930
AILRON = .000 ELEVON = -20.000
GRID = 13.000

RUN NO. 427/ 0 GRADIENT INTERVAL = -5.00/ 5.00

DLT-X	DLT-Z	CN	CA	CLM	CY	CYN	CBL	XCP/L	YCP/L	CPB
400.460	750.330	-.37152	.13934	-.02521	-.04540	-.00798	.00036	.51094	.43552	.00000
400.500	800.250	-.36129	.13324	-.03133	-.04700	-.00752	.00023	.49776	.44650	.00000
400.560	900.490	-.34917	.12936	-.03824	-.04652	-.00680	.00030	.48183	.45616	.00000
400.510	1000.300	-.34878	.12881	-.03652	-.04489	-.00642	.00032	.48518	.45842	.00000
	GRADIENT	.00000	.00000	.00000	.00000	.00000	.00000	.00000	.00000	.00000

AEDC VA422(IA17) ORB AND ET SEPARATING(ET DATA) (ATR273) (24 JUL 75)

REFERENCE DATA

SREF = 2690.0000 SQ.FT. XMRP = 1360.1000 IN. XT
LREF = 1290.3000 IN. YMRP = .0000 IN. YT
BREF = 1290.3000 IN. ZMRP = 416.4000 IN. ZT
SCALE = .0100

PARAMETRIC DATA

DLT-Y = 60.000 ALPHA = .000
BETA = 3.000 DLTALF = .000
DLTBTA = 3.000 MACH = 5.930
AILRON = .000 ELEVON = -20.000
GRID = 14.000

RUN NO. 440/ 0 GRADIENT INTERVAL = -5.00/ 5.00

DLT-X	DLT-Z	CN	CA	CLM	CY	CYN	CBL	XCP/L	YCP/L	CPB
.617	18.860	-.04393	.09821	.01020	-.07739	-.01875	.00073	.72049	.38910	.00000
.674	99.453	-.03509	.09593	.00860	-.07310	-.01910	.00073	.72964	.37581	.00000
.612	200.920	-.01971	.09550	.00881	-.07062	-.02217	.00042	.87063	.33903	.00000
.639	301.980	-.00675	.09153	.00118	-.07176	-.02110	.00056	.68026	.35293	.00000
.704	401.100	-.00737	.09212	.00155	-.07287	-.02150	.00058	.70525	.35224	.00000
.614	500.110	-.00786	.09234	.00179	-.07333	-.02224	.00058	.71694	.34651	.00000
.589	600.070	-.00813	.09254	.00126	-.07422	-.02275	.00058	.66676	.34419	.00000
	GRADIENT	.00000	.00000	.00000	.00000	.00000	.00000	.00000	.00000	.00000

AEDC VA422(IA17) ORB AND ET SEPARATING(ET DATA) (ATR274) (24 JUL 75)

REFERENCE DATA

SREF = 2690.0000 SQ.FT. XMRP = 1380.1000 IN. XT
LREF = 1290.3000 IN. YMRP = .0000 IN. YT
BREF = 1290.3000 IN. ZMRP = 416.4000 IN. ZT
SCALE = .0100

PARAMETRIC DATA

DLT-Y = 60.000 ALPHA = .000
BETA = 3.000 DLTALF = -10.000
DLTBTA = 3.000 MACH = 5.930
AILRON = .000 ELEVON = -20.000
GRID = 14.000

RUN NO. 439/ 0 GRADIENT INTERVAL = -5.00/ 5.00

DLT-X	DLT-Z	CN	CA	CLM	CY	CYN	CBL	XCP/L	YCP/L	CPB
.547	403.760	-.16961	.11175	-.01133	-.07695	-.01911	.00051	.51169	.38485	.00000
.495	501.790	-.14803	.10275	-.02432	-.07900	-.02010	.00052	.44354	.38061	.00000
.442	600.220	-.14544	.10394	-.02645	-.08012	-.01999	.00058	.43127	.38399	.00000
.517	750.030	-.14924	.10389	-.02659	-.08127	-.02032	.00059	.43387	.38371	.00000
-.000	801.640	-.14935	.10356	-.02635	-.08170	-.02035	.00057	.43510	.38429	.00000
	GRADIENT	.00000	.00000	.00000	.00000	.00000	.00000	.00000	.00000	.00000

AEDC VA422(IA17) ORB AND ET SEPARATING(ET DATA) (ATR275) (24 JUL 75)

REFERENCE DATA

SREF = 2690.0000 SQ.FT. XMRP = 1360.1000 IN. XT
LREF = 1290.3000 IN. YMRP = .0000 IN. YT
BREF = 1290.3000 IN. ZMRP = 416.4000 IN. ZT
SCALE = .0100

PARAMETRIC DATA

DLT-Y = 60.000 ALPHA = .000
BETA = 3.000 DLTALF = -20.000
DLTBTA = 3.000 MACH = 5.930
AILRON = .000 ELEVON = -20.000
GRID = 14.000

RUN NO. 438/ 0 GRADIENT INTERVAL = -5.00/ 5.00

DLT-X	DLT-Z	CN	CA	CLM	CY	CYN	CBL	XCP/L	YCP/L	CPB
.462	801.890	-.35186	.12954	-.03417	-.10139	-.01559	.00069	.49050	.45091	.00000
.460	900.460	-.35436	.12959	-.03310	-.10189	-.01521	.00073	.49308	.45404	.00000
.440	1000.300	-.35500	.12996	-.03200	-.09814	-.01436	.00066	.49536	.45657	.00000
	GRADIENT	.00000	.00000	.00000	.00000	.00000	.00000	.00000	.00000	.00000

ORIGINAL PAGE IS OF POOR QUALITY

AEDC VA422(IA17) ORB AND ET SEPARATING(ET DATA) (ATR277) (24 JUL 75)

REFERENCE DATA

SREF = 2690.0000 SQ.FT. XMRP = 1360.1000 IN. XT
LREF = 1290.3000 IN. YMRP = .0000 IN. YT
BREF = 1290.3000 IN. ZMRP = 416.4000 IN. ZT
SCALE = .0100

PARAMETRIC DATA

DLT-Y = 60.000 ALPHA = .000
BETA = 3.000 DLTALF = -10.000
DLTBTA = 3.000 MACH = 5.930
AILRON = .000 ELEVON = -40.000
GRID = 14.000

RUN NO. 454/ 0 GRADIENT INTERVAL = -5.00/ 5.00

DLT-X	DLT-Z	CN	CA	CLM	CY	CYN	CBL	XCP/L	YCP/L	CPB
.411	403.750	-.16983	.11130	-.01118	-.07857	-.01950	.00053	.51234	.38497	.00000
.507	501.810	-.14843	.10211	-.02421	-.07891	-.02003	.00051	.44438	.38103	.00000
.527	600.260	-.14540	.10318	-.02642	-.08136	-.02031	.00059	.43140	.38398	.00000
.577	750.130	-.14896	.10319	-.02651	-.08140	-.02028	.00059	.43401	.38426	.00000
.108	801.170	-.14841	.10299	-.02642	-.08132	-.02017	.00058	.43396	.38506	.00000
	GRADIENT	.00000	.00000	.00000	.00000	.00000	.00000	.00000	.00000	.00000

AEDC VA422(IA17) ORB AND ET SEPARATING(ET DATA) (ATR278) (24 JUL 75)

REFERENCE DATA

SREF = 2690.0000 SQ.FT. XMRP = 1360.1000 IN. XT
LREF = 1290.3000 IN. YMRP = .0000 IN. YT
BREF = 1290.3000 IN. ZMRP = 416.4000 IN. ZT
SCALE = .0100

PARAMETRIC DATA

DLT-Y = 60.000 ALPHA = .000
BETA = 3.000 DLTALF = -20.000
DLTBTA = 3.000 MACH = 5.930
AILRON = .000 ELEVON = -40.000
GRID = 14.000

RUN NO. 453/ 0 GRADIENT INTERVAL = -5.00/ 5.00

DLT-X	DLT-Z	CN	CA	CLM	CY	CYN	CBL	XCP/L	YCP/L	CPB
.494	801.850	-.35298	.12956	-.03419	-.10109	-.01561	.00069	.49068	.45047	.00000
.480	900.400	-.35391	.12894	-.03313	-.10092	-.01493	.00073	.49293	.45502	.00000
.470	1000.300	-.35676	.12954	-.03198	-.09919	-.01441	.00067	.49572	.45687	.00000
	GRADIENT	.00000	.00000	.00000	.00000	.00000	.00000	.00000	.00000	.00000

AEDC VA422(IA17) ORB AND ET SEPARATING(ET DATA) (ATR279) (24 JUL 75)

REFERENCE DATA

SREF = 2690.0000 SQ.FT. XMRP = 1360.1000 IN. XT
LREF = 1290.3000 IN. YMRP = .0000 IN. YT
BREF = 1290.3000 IN. ZMRP = 416.4000 IN. ZT
SCALE = .0100

PARAMETRIC DATA

DLT-Y = 60.000 ALPHA = .000
BETA = .000 DLTALF = .000
DLTBTA = 3.000 MACH = 5.930
AILRON = .000 ELEVON = -40.000
GRID = 13.000

RUN NO. 605/ 0 GRADIENT INTERVAL = -5.00/ 5.00

DLT-X	DLT-Z	CN	CA	CLM	CY	CYN	CBL	XCP/L	YCP/L	CPB
.468	18.999	-.04129	.09281	.00750	-.03850	-.01041	.00040	.68522	.36941	.00000
.495	99.692	-.03559	.09105	.00766	-.03696	-.01069	.00039	.70878	.35620	.00000
.543	200.490	-.02520	.09440	.01126	-.03474	-.01229	.00016	.87043	.31120	.00000
.439	302.040	-.00994	.08803	.00210	-.03606	-.01192	.00030	.70628	.32740	.00000
.413	400.880	-.00734	.09006	.00292	-.03690	-.01219	.00031	.83588	.32754	.00000
.438	500.180	-.01046	.09190	.00249	-.03728	-.01247	.00032	.72443	.32457	.00000
.562	596.470	-.01021	.09221	.00185	-.03843	-.01281	.00033	.68466	.32546	.00000
	GRADIENT	.00000	.00000	.00000	.00000	.00000	.00000	.00000	.00000	.00000

RUN NO. 606/ 0 GRADIENT INTERVAL = -5.00/ 5.00

DLT-X	DLT-Z	CN	CA	CLM	CY	CYN	CBL	XCP/L	YCP/L	CPB
400.470	20.071	-.04825	.09379	-.00697	-.04445	-.01083	.00036	.45739	.38810	.00000
400.440	97.792	-.04202	.09341	.00884	-.03918	-.00980	.00033	.70536	.38360	.00000
400.530	198.960	-.02886	.09221	.01120	-.03699	-.01179	.00024	.82945	.33560	.00000
400.500	297.960	-.01816	.09139	.00795	-.03550	-.01220	.00021	.86411	.31825	.00000
400.530	399.060	-.00904	.08896	.00322	-.03701	-.01248	.00031	.80745	.32282	.00000
400.550	500.070	-.00947	.09116	.00292	-.03852	-.01331	.00033	.77333	.31695	.00000
400.620	600.200	-.01138	.09180	.00162	-.03843	-.01346	.00034	.65803	.31370	.00000
	GRADIENT	.00000	.00000	.00000	.00000	.00000	.00000	.00000	.00000	.00000

AEDC VA422(IA17) ORB AND ET SEPARATING(ET DATA) (ATR280) (24 JUL 75)

REFERENCE DATA

SREF = 2690.0000 SQ.FT. XMRP = 1360.1000 IN. XT
LREF = 1290.3000 IN. YMRP = .0000 IN. YT
BREF = 1290.3000 IN. ZMRP = 416.4000 IN. ZT
SCALE = .0100

PARAMETRIC DATA

DLT-Y = 60.000 ALPHA = .000
BETA = .000 DLTALF = -10.000
DLTBTA = 3.000 MACH = 5.930
AILRON = .000 ELEVON = -40.000
GRID = 13.000

RUN NO. 603/ 0 GRADIENT INTERVAL = -5.00/ 5.00

DLT-X	DLT-Z	CN	CA	CLM	CY	CYN	CBL	XCP/L	YCP/L	CPB
.439	403.560	-.16667	.11108	-.01108	-.03913	-.01048	.00035	.51189	.37122	.00000
.513	501.680	-.14689	.10134	-.02506	-.03819	-.01063	.00026	.43915	.36381	.00000
.416	600.120	-.14468	.10267	-.02821	-.03910	-.01015	.00031	.42211	.37695	.00000
.415	750.050	-.14870	.10227	-.02912	-.04061	-.01061	.00031	.42151	.37581	.00000
-.156	801.570	-.14989	.10139	-.02937	-.04129	-.01091	.00030	.42143	.37374	.00000
	GRADIENT	.00000	.00000	.00000	.00000	.00000	.00000	.00000	.00000	.00000

RUN NO. 604/ 0 GRADIENT INTERVAL = -5.00/ 5.00

DLT-X	DLT-Z	CN	CA	CLM	CY	CYN	CBL	XCP/L	YCP/L	CPB
400.350	396.950	-.17380	.10869	-.01012	-.03980	-.00944	.00031	.51766	.39265	.00000
400.410	498.430	-.15994	.10951	-.01489	-.03951	-.01072	.00034	.49330	.36869	.00000
400.330	600.260	-.14700	.10190	-.02611	-.04208	-.01144	.00033	.43425	.36838	.00000
400.460	750.310	-.14714	.10251	-.02899	-.04178	-.01139	.00034	.42069	.36790	.00000
400.450	800.150	-.14843	.10189	-.02863	-.04047	-.01121	.00033	.42360	.36480	.00000
	GRADIENT	.00000	.00000	.00000	.00000	.00000	.00000	.00000	.00000	.00000

AEDC VA422(IA17) ORB AND ET SEPARATING(ET DATA) (ATR282) (24 JUL 75)

REFERENCE DATA

SREF = 2690.0000 SQ.FT. XMRP = 1360.1000 IN. XT
LREF = 1290.3000 IN. YMRP = .0000 IN. YT
BREF = 1290.3000 IN. ZMRP = 416.4000 IN. ZT
SCALE = .0100

PARAMETRIC DATA

DLT-Y = 60.000 ALPHA = .000
BETA = .000 DLTALF = -20.000
DLTBTA = 3.000 MACH = 5.930
AILRON = .000 ELEVON = -40.000
GRID = 13.000

RUN NO. 801/ 0 GRADIENT INTERVAL = -5.00/ 5.00

DLT-X	DLT-Z	CN	CA	CLM	CY	CYN	CBL	XCP/L	YCP/L	CPB
.473	801.880	-.34990	.12550	-.03993	-.05125	-.00788	.00029	.47862	.45093	.00000
.513	900.580	-.35131	.12442	-.03955	-.04969	-.00734	.00026	.47969	.45509	.00000
.801	1000.300	-.35261	.12548	-.03688	-.04958	-.00714	.00026	.48527	.45773	.00000
	GRADIENT	.00000	.00000	.00000	.00000	.00000	.00000	.00000	.00000	.00000

AEDC VA422(IA17) ORB AND ET SEPARATING(ET DATA) (ATR282) (24 JUL 75)

REFERENCE DATA

SREF = 2690.0000 SQ.FT. XMRP = 1360.1000 IN. XT
LREF = 1290.3000 IN. YMRP = .0000 IN. YT
BREF = 1290.3000 IN. ZMRP = 416.4000 IN. ZT
SCALE = .0100

PARAMETRIC DATA

DLT-Y = 60.000 ALPHA = .000
BETA = .000 DLTALF = -20.000
DLTBTA = 3.000 MACH = 5.930
AILRON = .000 ELEVON = -40.000
GRID = 13.000

RUN NO. 602/ 0 GRADIENT INTERVAL = -5.00/ 5.00

DLT-X	DLT-Z	CN	CA	CLM	CY	CYN	CBL	XCP/L	YCP/L	CPB
400.400	750.270	-.37431	.13712	-.02478	-.04911	-.00853	.00038	.51209	.43695	.00000
400.400	800.250	-.36482	.12983	-.03396	-.05059	-.00819	.00023	.49905	.44520	.00000
400.410	900.420	-.35124	.12612	-.03818	-.05034	-.00767	.00029	.48239	.45193	.00000
400.390	1000.300	-.35124	.12606	-.03654	-.04928	-.00737	.00032	.48566	.45390	.00000
	GRADIENT	.00000	.00000	.00000	.00000	.00000	.00000	.00000	.00000	.00000

AEDC VA422(IA17) ORB AND ET SEPARATING(ET DATA) (ATR283) (24 JUL 75)

REFERENCE DATA

SREF = 2690.0000 SQ.FT. XMRP = 1360.1000 IN. XT
LREF = 1290.3000 IN. YMRP = .0000 IN. YT
BREF = 1290.3000 IN. ZMRP = 416.4000 IN. ZT
SCALE = .0100

PARAMETRIC DATA

DLT-Y = 60.000 ALPHA = 5.000
BETA = .000 DLTALF = .000
DLTBTA = 3.000 MACH = 5.930
AILRON = .000 ELEVON = -40.000
GRID = 12.000

RUN NO. 618/ 0 GRADIENT INTERVAL = -5.00/ 5.00

DLT-X	DLT-Z	CN	CA	CLM	CY	CYN	CBL	XCP/L	YCP/L	CPB
.572	19.416	.01269	.09124	.02813	-.03936	-.01040	.00048	-.99029	.37377	.00000
.571	98.267	.02177	.09023	.02662	-.03571	-.01097	.00043	-.29571	.34378	.00000
.555	199.280	.03498	.08965	.02718	-.03559	-.01194	.00013	.01535	.32397	.00000
.553	300.100	.05076	.08563	.01912	-.03683	-.01112	.00032	.29512	.34737	.00000
.555	402.060	.05098	.08653	.01891	-.03829	-.01144	.00034	.29923	.34968	.00000
.608	501.150	.05209	.08696	.01866	-.03809	-.01123	.00035	.30810	.35229	.00000
.799	597.950	.05169	.08705	.01962	-.03880	-.01148	.00034	.29314	.35169	.00000
	GRADIENT	.00000	.00000	.00000	.00000	.00000	.00000	.00000	.00000	.00000

RUN NO. 619/ 0 GRADIENT INTERVAL = -5.00/ 5.00

DLT-X	DLT-Z	CN	CA	CLM	CY	CYN	CBL	XCP/L	YCP/L	CPB
400.580	19.951	.00676	.09308	.01115	-.04704	-.00950	.00040	-.59425	.41731	.00000
400.450	98.650	.00911	.09362	.02812	-.03888	-.00938	.00037	-1.59870	.38976	.00000
400.530	200.000	.02404	.09394	.03273	-.03549	-.01268	.00009	-.39282	.30868	.00000
400.460	298.930	.04976	.08489	.02017	-.03729	-.01151	.00032	.27523	.34272	.00000
400.440	398.080	.05142	.08591	.01921	-.03733	-.01105	.00034	.29738	.35162	.00000
400.590	499.420	.05091	.08702	.01928	-.03774	-.01133	.00035	.29372	.34865	.00000
400.610	599.830	.05097	.08682	.02030	-.03947	-.01179	.00036	.28013	.34966	.00000
	GRADIENT	.00000	.00000	.00000	.00000	.00000	.00000	.00000	.00000	.00000

AEDC VA422(IA17) ORB AND ET SEPARATING(ET DATA) (ATR284) (24 JUL 75)

REFERENCE DATA

SREF = 2690.0000 SQ.FT. XMRP = 1360.1000 IN. XT
LREF = 1290.3000 IN. YMRP = .0000 IN. YT
BREF = 1290.3000 IN. ZMRP = 416.4000 IN. ZT
SCALE = .0100

PARAMETRIC DATA

DLT-Y = 60.000 ALPHA = 5.000
BETA = .000 DLTALF = -10.000
DLTBTA = 3.000 MACH = 5.930
AILRON = .000 ELEVON = -40.000
GRID = 12.000

RUN NO. 616/ 0 GRADIENT INTERVAL = -5.00/ 5.00

DLT-X	DLT-Z	CN	CA	CLM	CY	CYN	CBL	XCP/L	YCP/L	CPB
.440	401.110	-.09119	.09703	-.00018	-.03444	-.01159	.00019	.55698	.32332	.00000
.502	502.640	-.07036	.09168	-.01383	-.03542	-.01127	.00029	.42103	.33598	.00000
.563	601.680	-.07045	.09248	-.01417	-.03566	-.01128	.00031	.41781	.33742	.00000
.467	750.050	-.06851	.09496	-.01347	-.03600	-.01139	.00031	.42093	.33727	.00000
-.572	802.670	-.06981	.09574	-.01405	-.03695	-.01188	.00031	.41776	.33368	.00000
	GRADIENT	.00000	.00000	.00000	.00000	.00000	.00000	.00000	.00000	.00000

RUN NO. 617/ 0 GRADIENT INTERVAL = -5.00/ 5.00

DLT-X	DLT-Z	CN	CA	CLM	CY	CYN	CBL	XCP/L	YCP/L	CPB
400.540	398.240	-.11786	.10490	.01345	-.03574	-.01123	.00009	.63809	.33881	.00000
400.390	497.650	-.07463	.09214	-.01057	-.03597	-.01172	.00026	.45939	.33079	.00000
400.570	599.160	-.06873	.09152	-.01340	-.03598	-.01141	.00031	.42214	.33673	.00000
400.550	750.070	-.06796	.09404	-.01299	-.03631	-.01177	.00032	.42478	.33183	.00000
400.590	800.160	-.06819	.09500	-.01329	-.03702	-.01192	.00033	.42217	.33333	.00000
	GRADIENT	.00000	.00000	.00000	.00000	.00000	.00000	.00000	.00000	.00000

AEDC VA422(IA17) ORB AND ET SEPARATING(ET DATA) (ATR286) (24 JUL 75)

REFERENCE DATA

SREF = 2690.0000 SQ.FT. XMRP = 1360.1000 IN. XT
LREF = 1290.3000 IN. YMRP = .0000 IN. YT
BREF = 1290.3000 IN. ZMRP = 416.4000 IN. ZT
SCALE = .0100

PARAMETRIC DATA

DLT-Y = 60.000 ALPHA = 5.000
BETA = .000 DLTALF = -20.000
DLTBTA = 3.000 MACH = 5.930
AILRON = .000 ELEVON = -40.000
GRID = 12.000

RUN NO. 614/ 0 GRADIENT INTERVAL = -5.00/ 5.00

DLT-X	DLT-Z	CN	CA	CLM	CY	CYN	CBL	XCP/L	YCP/L	CPB
.457	801.430	-.23258	.11105	-.03449	-.04308	-.00905	.00033	.45475	.41152	.00000
.402	900.280	-.23441	.11140	-.03598	-.04163	-.00905	.00031	.45110	.40650	.00000
.494	1000.100	-.23569	.11213	-.03627	-.04416	-.00896	.00034	.45082	.41661	.00000
	GRADIENT	.00000	.00000	.00000	.00000	.00000	.00000	.00000	.00000	.00000

AEDC VA422(IA17) ORB AND ET SEPARATING(ET DATA) (ATR286) (24 JUL 75)

REFERENCE DATA

SREF = 2690.0000 SQ.FT. XMRP = 1360.1000 IN. XT
LREF = 1290.3000 IN. YMRP = .0000 IN. YT
BREF = 1290.3000 IN. ZMRP = 416.4000 IN. ZT
SCALE = .0100

PARAMETRIC DATA

DLT-Y = 60.000 ALPHA = 5.000
BETA = .000 DLTALF = -20.000
DLTBTA = 3.000 MACH = 5.930
AILRON = .000 ELEVON = -40.000
GRID = 12.000

RUN NO. 615/ 0 GRADIENT INTERVAL = -5.00/ 5.00

DLT-X	DLT-Z	CN	CA	CLM	CY	CYN	CBL	XCP/L	YCP/L	CPB
400.420	750.200	-.23703	.10945	-.03089	-.04328	-.00908	.00028	.46728	.41181	.00000
400.380	800.210	-.23219	.11125	-.03439	-.04294	-.00914	.00031	.45487	.40961	.00000
400.490	900.210	-.23371	.11237	-.03602	-.04540	-.00971	.00036	.45067	.40891	.00000
400.460	1000.300	-.23733	.11236	-.03705	-.04544	-.00961	.00034	.44928	.41055	.00000
	GRADIENT	.00000	.00000	.00000	.00000	.00000	.00000	.00000	.00000	.00000

AEDC VA422(IA17) ORB AND ET SEPARATING(ET DATA) (ATR287) (24 JUL 75)

REFERENCE DATA

SREF = 2690.0000 SQ.FT. XMRP = 1360.1000 IN. XT
LREF = 1290.3000 IN. YMRP = .0000 IN. YT
BREF = 1290.3000 IN. ZMRP = 416.4000 IN. ZT
SCALE = .0100

PARAMETRIC DATA

DLT-Y = 60.000 ALPHA = -5.000
BETA = .000 DLTALF = .000
DLTBTA = 3.000 MACH = 5.930
AILRON = .000 ELEVON = -40.000
GRID = 11.000

RUN NO. 631/ 0 GRADIENT INTERVAL = -5.00/ 5.00

DLT-X	DLT-Z	CN	CA	CLM	CY	CYN	CBL	XCP/L	YCP/L	CPB
.486	19.705	-.10113	.09737	-.01133	-.03934	-.00924	.00044	.48006	.39423	.00000
.523	101.520	-.09354	.09673	-.00875	-.03831	-.00998	.00034	.49299	.37641	.00000
.467	201.800	-.08493	.10165	-.00624	-.03651	-.01162	.00029	.50697	.33604	.00000
.553	301.250	-.07925	.09854	-.01189	-.03523	-.01169	.00026	.45356	.32660	.00000
.520	400.140	-.07433	.09601	-.01583	-.03682	-.01206	.00031	.40952	.32950	.00000
.568	500.250	-.07552	.09455	-.01678	-.03729	-.01205	.00031	.40311	.33263	.00000
.557	600.210	-.07453	.09340	-.01558	-.03523	-.01121	.00030	.41226	.33602	.00000
	GRADIENT	.00000	.00000	.00000	.00000	.00000	.00000	.00000	.00000	.00000

RUN NO. 632/ 0 GRADIENT INTERVAL = -5.00/ 5.00

DLT-X	DLT-Z	CN	CA	CLM	CY	CYN	CBL	XCP/L	YCP/L	CPB
400.510	23.692	-.10137	.09458	-.02557	-.04288	-.01048	.00037	.38214	.38760	.00000
400.440	100.180	-.09720	.09709	-.01081	-.04061	-.01079	.00032	.48056	.37268	.00000
400.510	197.830	-.08281	.09605	-.01102	-.03884	-.01040	.00029	.46535	.37129	.00000
400.340	298.270	-.08365	.10020	-.00848	-.03968	-.01238	.00031	.48749	.34042	.00000
400.420	399.910	-.08160	.10044	-.01108	-.03681	-.01289	.00029	.46349	.31367	.00000
400.470	500.210	-.07494	.09557	-.01586	-.03658	-.01214	.00032	.41046	.32651	.00000
400.500	600.160	-.07416	.09382	-.01595	-.03705	-.01186	.00032	.40798	.33473	.00000
	GRADIENT	.00000	.00000	.00000	.00000	.00000	.00000	.00000	.00000	.00000

AEDC VA422(IA17) ORB AND ET SEPARATING(ET DATA) (ATR288) (24 JUL 75)

REFERENCE DATA

SREF = 2690.0000 SQ.FT. XMRP = 1360.1000 IN. XT
LREF = 1290.3000 IN. YMRP = .0000 IN. YT
BREF = 1290.3000 IN. ZMRP = 416.4000 IN. ZT
SCALE = .0100

PARAMETRIC DATA

DLT-Y = 60.000 ALPHA = -5.000
BETA = .000 DLTALF = -10.000
DLTBTA = 3.000 MACH = 5.930
AILRON = .000 ELEVON = -40.000
GRID = 11.000

RUN NO. 629/ 0 GRADIENT INTERVAL = -5.00/ 5.00

DLT-X	DLT-Z	CN	CA	CLM	CY	CYN	CBL	XCP/L	YCP/L	CPB
.521	403.940	-.27107	.12521	-.02014	-.04525	-.00883	.00038	.59642	.42200	.00000
.522	500.940	-.25835	.11883	-.02804	-.04332	-.00965	.00035	.48252	.40269	.00000
.444	600.240	-.24262	.11088	-.03630	-.04317	-.00874	.00027	.45381	.41696	.00000
.447	750.160	-.24104	.11039	-.03468	-.04248	-.00843	.00031	.45781	.41966	.00000
.191	800.370	-.24078	.11045	-.03448	-.04367	-.00855	.00031	.45828	.42157	.00000
	GRADIENT	.00000	.00000	.00000	.00000	.00000	.00000	.00000	.00000	.00000

RUN NO. 630/ 0 GRADIENT INTERVAL = -5.00/ 5.00

DLT-X	DLT-Z	CN	CA	CLM	CY	CYN	CBL	XCP/L	YCP/L	CPB
400.520	397.040	-.24649	.11169	-.03809	-.04727	-.00899	.00038	.45039	.42553	.00000
400.430	499.580	-.25820	.11695	-.02916	-.04603	-.00887	.00037	.47943	.42378	.00000
400.410	599.930	-.26031	.12207	-.02471	-.04309	-.01003	.00043	.49202	.39570	.00000
400.400	750.210	-.24103	.11063	-.03507	-.04291	-.00862	.00030	.45670	.41805	.00000
400.380	800.140	-.24011	.10998	-.03502	-.04218	-.00856	.00030	.45644	.41655	.00000
	GRADIENT	.00000	.00000	.00000	.00000	.00000	.00000	.00000	.00000	.00000

AEDC VA422(IA17) ORB AND ET SEPARATING(ET DATA) (ATR290) (24 JUL 75)

REFERENCE DATA

SREF = 2690.0000 SQ.FT. XMRP = 1360.1000 IN. XT
LREF = 1290.3000 IN. YMRP = .0000 IN. YT
BREF = 1290.3000 IN. ZMRP = 416.4000 IN. ZT
SCALE = .0100

PARAMETRIC DATA

DLT-Y = 60.000 ALPHA = -5.000
BETA = .000 DLTALF = -20.000
DLTBTA = 3.000 MACH = 5.930
AILRON = .000 ELEVON = -40.000
GRID = 11.000

RUN NO. 627/ 0 GRADIENT INTERVAL = -5.00/ 5.00

DLT-X	DLT-Z	CN	CA	CLM	CY	CYN	CBL	XCP/L	YCP/L	CPB
.410	804.380	-.51141	.14394	-.02024	-.05435	-.00554	.00036	.53069	.48707	.00000
.493	900.800	-.48754	.14496	-.03234	-.05283	-.00580	.00047	.51200	.48169	.00000
.417	1000.400	-.48643	.14437	-.03215	-.05269	-.00572	.00046	.51217	.48255	.00000
	GRADIENT	.00000	.00000	.00000	.00000	.00000	.00000	.00000	.00000	.00000

AEDC VA422(IA17) ORB AND ET SEPARATING(ET DATA) (ATR290) (24 JUL 75)

REFERENCE DATA

SREF = 2690.0000 SQ.FT. XMRP = 1360.1000 IN. XT
LREF = 1290.3000 IN. YMRP = .0000 IN. YT
BREF = 1290.3000 IN. ZMRP = 416.4000 IN. ZT
SCALE = .0100

PARAMETRIC DATA

DLT-Y = 60.000 ALPHA = -5.000
BETA = .000 DLTALF = -20.000
DLTBTA = 3.000 MACH = 5.930
AILRON = .000 ELEVON = -40.000
GRID = 11.000

RUN NO. 628/ 0 GRADIENT INTERVAL = -5.00/ 5.00

DLT-X	DLT-Z	CN	CA	CLM	CY	CYN	CBL	XCP/L	YCP/L	CPB
400.430	750.930	-.51986	.15357	-.01734	-.05594	-.00497	.00045	.53504	.49629	.00000
400.360	800.550	-.51752	.15942	-.01608	-.05328	-.00707	.00044	.53663	.46561	.00000
400.520	900.300	-.50000	.14753	-.02458	-.05365	-.00560	.00026	.52399	.48540	.00000
400.400	1000.400	-.48288	.14278	-.03359	-.05362	-.00551	.00037	.50975	.48660	.00000
	GRADIENT	.00000	.00000	.00000	.00000	.00000	.00000	.00000	.00000	.00000

AEDC VA422(IA17) ORB AND ET SEPARATING(ET DATA) (ATR291) (24 JUL 75)

REFERENCE DATA

SREF = 2690.0000 SQ.FT. XMRP = 1360.1000 IN. XT
LREF = 1290.3000 IN. YMRP = .0000 IN. YT
BREF = 1290.3000 IN. ZMRP = 416.4000 IN. ZT
SCALE = .0100

PARAMETRIC DATA

DLT-Y = 60.000 ALPHA = -10.000
BETA = .000 DLTALF = .000
DLTBTA = 3.000 MACH = 5.930
AILRON = .000 ELEVON = -40.000
GRID = 10.000

RUN NO. 640/ 0 GRADIENT INTERVAL = -5.00/ 5.00

DLT-X	DLT-Z	CN	CA	CLM	CY	CYN	CBL	XCP/L	YCP/L	CPB
.452	31.664	-.17893	.10716	-.02797	-.04112	-.00928	.00058	.44912	.40074	.00000
.529	102.590	-.16687	.10325	-.02729	-.04216	-.00994	.00037	.44406	.39354	.00000
.519	202.280	-.16607	.10311	-.02596	-.04076	-.01013	.00039	.44913	.38472	.00000
.404	300.590	-.16758	.10828	-.01993	-.03849	-.01066	.00033	.47526	.36488	.00000
.381	400.180	-.15308	.09903	-.02624	-.03842	-.01001	.00028	.43859	.37631	.00000
.491	500.220	-.15037	.09864	-.02742	-.03869	-.00984	.00029	.43092	.38066	.00000
	GRADIENT	.00000	.00000	.00000	.00000	.00000	.00000	.00000	.00000	.00000

RUN NO. 641/ 0 GRADIENT INTERVAL = -5.00/ 5.00

DLT-X	DLT-Z	CN	CA	CLM	CY	CYN	CBL	XCP/L	YCP/L	CPB
400.440	32.477	-.15588	.09807	-.04213	-.04442	-.01084	.00043	.38954	.38783	.00000
400.430	103.130	-.16078	.10278	-.03187	-.04263	-.01156	.00028	.41986	.36894	.00000
400.530	201.480	-.14993	.09886	-.03634	-.04254	-.01085	.00039	.38899	.38008	.00000
400.530	300.530	-.15912	.10034	-.02958	-.04050	-.00981	.00035	.42849	.38908	.00000
400.430	400.310	-.16453	.10394	-.02204	-.03943	-.00979	.00035	.46475	.38480	.00000
400.410	500.140	-.15982	.10441	-.02186	-.03851	-.01025	.00035	.46280	.37247	.00000
	GRADIENT	.00000	.00000	.00000	.00000	.00000	.00000	.00000	.00000	.00000

AEDC VA422(IA17) ORB AND ET SEPARATING(ET DATA) (ATR292) (24 JUL 75)

REFERENCE DATA

SREF = 2690.0000 SQ.FT. XMRP = 1360.1000 IN. XT
LREF = 1290.3000 IN. YMRP = .0000 IN. YT
BREF = 1290.3000 IN. ZMRP = 416.4000 IN. ZT
SCALE = .0100

PARAMETRIC DATA

DLT-Y = 60.000 ALPHA = -10.000
BETA = .000 DLTALF = -10.000
DLTBTA = 3.000 MACH = 5.930
AILRON = .000 ELEVON = -40.000
GRID = 10.000

RUN NO. 638/ 0 GRADIENT INTERVAL = -5.00/ 5.00

DLT-X	DLT-Z	CN	CA	CLM	CY	CYN	CBL	XCP/L	YCP/L	CPB
.490	403.540	-.36438	.12411	-.03734	-.05117	-.00650	.00040	.48674	.46961	.00000
.363	501.600	-.37830	.13467	-.02297	-.05053	-.00676	.00028	.51593	.46485	.00000
.299	600.520	-.37001	.13041	-.02575	-.04702	-.00719	.00032	.50973	.45148	.00000
.440	700.240	-.35273	.12286	-.03471	-.04775	-.00666	.00024	.48959	.46087	.00000
.687	799.920	-.35257	.12440	-.03455	-.05047	-.00728	.00026	.48987	.45759	.00000
	GRADIENT	.00000	.00000	.00000	.00000	.00000	.00000	.00000	.00000	.00000

RUN NO. 639/ 0 GRADIENT INTERVAL = -5.00/ 5.00

DLT-X	DLT-Z	CN	CA	CLM	CY	CYN	CBL	XCP/L	YCP/L	CPB
400.380	397.340	-.32602	.11283	-.06020	-.05040	-.00788	.00034	.42934	.44917	.00000
400.350	499.420	-.34839	.11874	-.04513	-.04975	-.00619	.00035	.46785	.47140	.00000
400.290	600.140	-.36572	.12668	-.03063	-.05190	-.00643	.00032	.49983	.47184	.00000
400.310	700.190	-.37391	.13419	-.02272	-.04671	-.00790	.00031	.51589	.44020	.00000
400.490	800.170	-.35930	.12424	-.03073	-.04723	-.00656	.00022	.49858	.46133	.00000
	GRADIENT	.00000	.00000	.00000	.00000	.00000	.00000	.00000	.00000	.00000

AEDC VA422(IA17) ORB AND ET SEPARATING(ET DATA) (ATR293) (24 JUL 75)

REFERENCE DATA

SREF = 2690.0000 SQ.FT. XMRP = 1360.1000 IN. XT
LREF = 1290.3000 IN. YMRP = .0000 IN. YT
BREF = 1290.3000 IN. ZMRP = 416.4000 IN. ZT
SCALE = .0100

PARAMETRIC DATA

DLT-Y = 60.000 ALPHA = .000
BETA = 3.000 DLTALF = .000
DLTBTA = 3.000 MACH = 5.930
AILRON = 15.000 ELEVON = .000
GRID = 14.000

RUN NO. 467/ 0 GRADIENT INTERVAL = -5.00/ 5.00

DLT-X	DLT-Z	CN	CA	CLM	CY	CYN	CBL	XCP/L	YCP/L	CPB
.498	18.855	-.04423	.09367	.00871	-.07861	-.01971	.00074	.69599	.38319	.00000
.459	99.456	-.03786	.09272	.00857	-.07476	-.02000	.00074	.71648	.37146	.00000
.606	200.770	-.02038	.09135	.00750	-.07228	-.02283	.00044	.81556	.33763	.00000
.521	301.880	-.00978	.08901	.00073	-.07406	-.02207	.00058	.61038	.35009	.00000
.547	401.070	-.01011	.08872	.00118	-.07486	-.02222	.00060	.63968	.35099	.00000
.540	500.090	-.00999	.08900	.00136	-.07554	-.02311	.00059	.65339	.34463	.00000
.880	597.070	-.01115	.08985	.00091	-.07777	-.02370	.00061	.61512	.34546	.00000
	GRADIENT	.00000	.00000	.00000	.00000	.00000	.00000	.00000	.00000	.00000

AEDC VA422(IA17) ORB AND ET SEPARATING(ET DATA) (ATR294) (24 JUL 75)

REFERENCE DATA

SREF = 2690.0000 SQ.FT. XMRP = 1360.1000 IN. XT
LREF = 1290.3000 IN. YMRP = .0000 IN. YT
BREF = 1290.3000 IN. ZMRP = 416.4000 IN. ZT
SCALE = .0100

PARAMETRIC DATA

DLT-Y = 60.000 ALPHA = .000
BETA = 3.000 DLTALF = -10.000
DLTBTA = 3.000 MACH = 5.930
AILRON = 15.000 ELEVON = .000
GRID = 14.000

RUN NO. 466/ 0 GRADIENT INTERVAL = -5.00/ 5.00

DLT-X	DLT-Z	CN	CA	CLM	CY	CYN	CBL	XCP/L	YCP/L	CPB
.446	403.640	-.17147	.10731	-.01209	-.08006	-.01985	.00051	.50908	.38510	.00000
.505	501.780	-.14968	.09940	-.02495	-.08040	-.02047	.00051	.44187	.38048	.00000
.497	600.290	-.14962	.10030	-.02671	-.08223	-.02075	.00059	.43365	.38205	.00000
.513	750.030	-.15045	.10080	-.02698	-.08296	-.02081	.00059	.43305	.38310	.00000
-.068	802.200	-.15223	.10030	-.02681	-.08371	-.02095	.00059	.43532	.38348	.00000
	GRADIENT	.00000	.00000	.00000	.00000	.00000	.00000	.00000	.00000	.00000

ORIGINAL PAGE IS OF POOR QUALITY

AEDC VA422(IA17) ORB AND ET SEPARATING(ET DATA) (ATR295) (24 JUL 75)

REFERENCE DATA

SREF = 2690.0000 SQ.FT. XMRP = 1360.1000 IN. XT
LREF = 1290.3000 IN. YMRP = .0000 IN. YT
BREF = 1290.3000 IN. ZMRP = 416.4000 IN. ZT
SCALE = .0100

PARAMETRIC DATA

DLT-Y = 60.000 ALPHA = .000
BETA = 3.000 DLTALF = -20.000
DLTBTA = 3.000 MACH = 5.930
AILRON = 15.000 ELEVON = .000
GRID = 14.000

RUN NO. 465/ 0 GRADIENT INTERVAL = -5.00/ 5.00

DLT-X	DLT-Z	CN	CA	CLM	CY	CYN	CBL	XCP/L	YCP/L	CPB
.560	802.110	-.35481	.12589	-.03462	-.10300	-.01622	.00070	.49014	.44833	.00000
.488	900.550	-.35679	.12631	-.03352	-.10183	-.01540	.00072	.49271	.45271	.00000
.430	1000.200	-.35812	.12621	-.03243	-.10019	-.01476	.00066	.49507	.45545	.00000
	GRADIENT	.00000	.00000	.00000	.00000	.00000	.00000	.00000	.00000	.00000

AEDC VA422(IA17) ORB AND ET SEPARATING(ET DATA) (ATR296) (24 JUL 75)

REFERENCE DATA

SREF = 2690.0000 SQ.FT. XMRP = 1360.1000 IN. XT
LREF = 1290.3000 IN. YMRP = .0000 IN. YT
BREF = 1290.3000 IN. ZMRP = 416.4000 IN. ZT
SCALE = .0100

PARAMETRIC DATA

DLT-Y = 60.000 ALPHA = .000
BETA = .000 DLTALF = .000
DLTBTA = 3.000 MACH = 5.930
AILRON = 15.000 ELEVON = .000
GRID = 13.000

RUN NO. 477/ 0 GRADIENT INTERVAL = -5.00/ 5.00

DLT-X	DLT-Z	CN	CA	CLM	CY	CYN	CBL	XCP/L	YCP/L	CPB
.462	19.054	-.04162	.09251	.00827	-.03794	-.01032	.00041	.69722	.36825	.00000
.538	99.625	-.03510	.09044	.00793	-.03753	-.01061	.00043	.71615	.36089	.00000
.557	200.410	-.02420	.09379	.01083	-.03649	-.01269	.00020	.87088	.31548	.00000
.453	302.100	-.00935	.08725	.00191	-.03686	-.01224	.00033	.70109	.32641	.00000
.519	401.020	-.00819	.08927	.00286	-.03677	-.01229	.00033	.80181	.32492	.00000
.558	500.140	-.00872	.09055	.00239	-.03824	-.01249	.00035	.74961	.33025	.00000
.643	597.180	-.01029	.09128	.00173	-.03815	-.01254	.00036	.67577	.32865	.00000
	GRADIENT	.00000	.00000	.00000	.00000	.00000	.00000	.00000	.00000	.00000

RUN NO. 478/ 0 GRADIENT INTERVAL = -5.00/ 5.00

DLT-X	DLT-Z	CN	CA	CLM	CY	CYN	CBL	XCP/L	YCP/L	CPB
400.460	19.974	-.04953	.09281	-.00636	-.04428	-.01098	.00035	.46866	.38509	.00000
400.430	97.828	-.04295	.09373	.00941	-.03996	-.01007	.00035	.71138	.38228	.00000
400.510	198.990	-.02871	.09074	.01108	-.03744	-.01194	.00028	.82787	.33544	.00000
400.530	297.970	-.01602	.09049	.00763	-.03776	-.01264	.00024	.89132	.32449	.00000
400.530	399.100	-.00864	.08805	.00316	-.03823	-.01300	.00035	.81393	.32084	.00000
400.570	500.110	-.00861	.08992	.00291	-.03867	-.01340	.00037	.79478	.31627	.00000
400.650	600.200	-.01037	.09133	.00161	-.03925	-.01362	.00036	.66693	.31600	.00000
	GRADIENT	.00000	.00000	.00000	.00000	.00000	.00000	.00000	.00000	.00000

AEDC VA422(IA17) ORB AND ET SEPARATING(ET DATA) (ATR297) (24 JUL 75)

REFERENCE DATA

SREF = 2690.0000 SQ.FT. XMRP = 1360.1000 IN. XT
LREF = 1290.3000 IN. YMRP = .0000 IN. YT
BREF = 1290.3000 IN. ZMRP = 416.4000 IN. ZT
SCALE = .0100

PARAMETRIC DATA

DLT-Y = 60.000 ALPHA = .000
BETA = .000 DLTALF = -10.000
DLTBTA = 3.000 MACH = 5.930
AILRON = 15.000 ELEVON = .000
GRID = 13.000

RUN NO. 475/ 0 GRADIENT INTERVAL = -5.00/ 5.00

DLT-X	DLT-Z	CN	CA	CLM	CY	CYN	CBL	XCP/L	YCP/L	CPB
.435	403.640	-.16619	.11021	-.01108	-.03944	-.01078	.00039	.51176	.36733	.00000
.506	501.690	-.14538	.10076	-.02508	-.03826	-.01073	.00031	.43784	.36249	.00000
.384	600.110	-.14343	.10144	-.02816	-.03927	-.01022	.00032	.42116	.37655	.00000
.438	750.080	-.14904	.10202	-.02884	-.04037	-.01051	.00033	.42318	.37644	.00000
-.213	802.330	-.14869	.10044	-.02931	-.04146	-.01086	.00033	.42064	.37539	.00000
	GRADIENT	.00000	.00000	.00000	.00000	.00000	.00000	.00000	.00000	.00000

RUN NO. 476/ 0 GRADIENT INTERVAL = -5.00/ 5.00

DLT-X	DLT-Z	CN	CA	CLM	CY	CYN	CBL	XCP/L	YCP/L	CPB
400.370	396.850	-.17247	.10845	-.00994	-.04184	-.00982	.00036	.51809	.39434	.00000
400.440	498.420	-.16189	.10853	-.01477	-.04125	-.01116	.00037	.49459	.36934	.00000
400.340	600.180	-.14600	.10166	-.02632	-.04121	-.01119	.00034	.43241	.36860	.00000
400.500	750.210	-.14721	.10126	-.02909	-.04089	-.01117	.00036	.42030	.36753	.00000
400.540	800.240	-.14847	.10112	-.02867	-.04060	-.01095	.00035	.42342	.36990	.00000
	GRADIENT	.00000	.00000	.00000	.00000	.00000	.00000	.00000	.00000	.00000

AEDC VA422(IA17) ORB AND ET SEPARATING(ET DATA) (ATR299) (24 JUL 75)

REFERENCE DATA

SREF = 2690.0000 SQ.FT. XMRP = 1360.1000 IN. XT
LREF = 1290.3000 IN. YMRP = .0000 IN. YT
BREF = 1290.3000 IN. ZMRP = 416.4000 IN. ZT
SCALE = .0100

PARAMETRIC DATA

DLT-Y = 60.000 ALPHA = .000
BETA = .000 DLTALF = -20.000
DLTBTA = 3.000 MACH = 5.930
AILRON = 15.000 ELEVON = .000
GRID = 13.000

RUN NO. 480/ 0 GRADIENT INTERVAL = -5.00/ 5.00

DLT-X	DLT-Z	CN	CA	CLM	CY	CYN	CBL	XCP/L	YCP/L	CPB
.402	802.080	-.34730	.12457	-.03983	-.05161	-.00792	.00031	.47821	.45114	.00000
.483	900.620	-.34988	.12317	-.03943	-.05227	-.00793	.00029	.47960	.45241	.00000
.435	1000.300	-.35079	.12458	-.03693	-.04957	-.00710	.00029	.48480	.45824	.00000
	GRADIENT	.00000	.00000	.00000	.00000	.00000	.00000	.00000	.00000	.00000

AEDC VA422(IA17) ORB AND ET SEPARATING(ET DATA) (ATR299) (24 JUL 75)

REFERENCE DATA

SREF = 2690.0000 SQ.FT. XMRP = 1360.1000 IN. XT
LREF = 1290.3000 IN. YMRP = .0000 IN. YT
BREF = 1290.3000 IN. ZMRP = 416.4000 IN. ZT
SCALE = .0100

PARAMETRIC DATA

DLT-Y = 60.000 ALPHA = .000
BETA = .000 DLTALF = -20.000
DLTBTA = 3.000 MACH = 5.930
AILRON = 15.000 ELEVON = .000
GRID = 13.000

RUN NO. 474/ 0 GRADIENT INTERVAL = -5.00/ 5.00

DLT-X	DLT-Z	CN	CA	CLM	CY	CYN	CBL	XCP/L	YCP/L	CPB
400.530	750.300	-.37233	.13490	-.02490	-.04974	-.00888	.00041	.51162	.43356	.00000
400.430	800.280	-.36267	.12922	-.03104	-.05045	-.00808	.00026	.49854	.44639	.00000
400.490	900.430	-.35034	.12472	-.03803	-.05028	-.00763	.00032	.48251	.45227	.00000
400.440	1000.300	-.34943	.12488	-.03650	-.04863	-.00720	.00034	.48536	.45495	.00000
	GRADIENT	.00000	.00000	.00000	.00000	.00000	.00000	.00000	.00000	.00000

AEDC VA422(IA17) ORB AND ET SEPARATING(ET DATA) (ATR300) (24 JUL 75)

REFERENCE DATA

SREF = 2690.0000 SQ.FT. XMRP = 1360.1000 IN. XT
LREF = 1290.3000 IN. YMRP = .0000 IN. YT
BREF = 1290.3000 IN. ZMRP = 416.4000 IN. ZT
SCALE = .0100

PARAMETRIC DATA

DLT-Y = 60.000 ALPHA = 5.000
BETA = .000 DLTALF = .000
DLTBTA = 3.000 MACH = 5.930
AILRON = 15.000 ELEVON = .000
GRID = 12.000

RUN NO. 490/ 0 GRADIENT INTERVAL = -5.00/ 5.00

DLT-X	DLT-Z	CN	CA	CLM	CY	CYN	CBL	XCP/L	YCP/L	CPB
.616	19.378	.01284	.09189	.02807	-.03865	-.01039	.00051	-.96883	.37063	.00000
.511	98.268	.02216	.09015	.02649	-.03653	-.01122	.00046	-.27687	.34373	.00000
.612	199.110	.03554	.09000	.02696	-.03669	-.01222	.00015	.02829	.32558	.00000
.614	300.070	.05138	.08598	.01911	-.03915	-.01163	.00037	.29850	.35079	.00000
.630	401.940	.05135	.08705	.01889	-.03927	-.01176	.00036	.30136	.34920	.00000
.558	501.220	.05209	.08701	.01861	-.03859	-.01145	.00037	.30871	.35096	.00000
.729	598.530	.05138	.08787	.01943	-.03918	-.01166	.00039	.29403	.35051	.00000
	GRADIENT	.00000	.00000	.00000	.00000	.00000	.00000	.00000	.00000	.00000

RUN NO. 491/ 0 GRADIENT INTERVAL = -5.00/ 5.00

DLT-X	DLT-Z	CN	CA	CLM	CY	CYN	CBL	XCP/L	YCP/L	CPB
400.450	19.972	.00593	.09368	.01182	-.04710	-.00979	.00038	-.83511	.41318	.00000
400.480	98.779	.00818	.09347	.02844	-.04054	-.00985	.00042	-1.86990	.38858	.00000
400.430	200.020	.02362	.09508	.03261	-.03642	-.01282	.00011	-.40603	.31244	.00000
400.540	298.970	.04888	.08490	.02013	-.03800	-.01162	.00035	.27057	.34472	.00000
400.520	397.980	.05160	.08668	.01915	-.03915	-.01185	.00037	.29903	.34684	.00000
400.550	499.380	.05050	.08681	.01922	-.03897	-.01155	.00038	.29249	.35132	.00000
400.540	599.990	.05058	.08694	.02016	-.03933	-.01191	.00039	.27985	.34678	.00000
	GRADIENT	.00000	.00000	.00000	.00000	.00000	.00000	.00000	.00000	.00000

AEDC VA422(IA17) ORB AND ET SEPARATING(ET DATA) (ATR301) (24 JUL 75)

REFERENCE DATA

SREF = 2690.0000 SQ.FT. XMRP = 1360.1000 IN. XT
LREF = 1290.3000 IN. YMRP = .0000 IN. YT
BREF = 1290.3000 IN. ZMRP = 416.4000 IN. ZT
SCALE = .0100

PARAMETRIC DATA

DLT-Y = 60.000 ALPHA = 5.000
BETA = .000 DLTALF = -10.000
DLTBTA = 3.000 MACH = 5.930
AILRON = 15.000 ELEVON = .000
GRID = 12.000

RUN NO. 488/ 0 GRADIENT INTERVAL = -5.00/ 5.00

DLT-X	DLT-Z	CN	CA	CLM	CY	CYN	CBL	XCP/L	YCP/L	CPB
.533	400.980	-.09091	.09756	-.00049	-.03597	-.01215	.00022	.55458	.32233	.00000
.494	502.710	-.07070	.09201	-.01392	-.03591	-.01150	.00032	.42082	.33467	.00000
.491	601.700	-.06926	.09256	-.01430	-.03616	-.01148	.00033	.41408	.33660	.00000
.601	750.050	-.06777	.09551	-.01355	-.03663	-.01177	.00034	.41868	.33389	.00000
-.525	803.170	-.07034	.09580	-.01420	-.03757	-.01209	.00033	.41727	.33348	.00000
	GRADIENT	.00000	.00000	.00000	.00000	.00000	.00000	.00000	.00000	.00000

RUN NO. 489/ 0 GRADIENT INTERVAL = -5.00/ 5.00

DLT-X	DLT-Z	CN	CA	CLM	CY	CYN	CBL	XCP/L	YCP/L	CPB
400.490	398.310	-.11738	.10490	.01284	-.03621	-.01149	.00014	.63476	.33677	.00000
400.490	497.670	-.07515	.09161	-.01093	-.03684	-.01192	.00030	.45674	.33230	.00000
400.460	598.990	-.06624	.09206	-.01369	-.03599	-.01148	.00033	.41392	.33555	.00000
400.510	750.130	-.06839	.09495	-.01307	-.03771	-.01198	.00035	.42481	.33639	.00000
400.570	800.040	-.06809	.09621	-.01343	-.03782	-.01239	.00035	.42059	.32942	.00000
	GRADIENT	.00000	.00000	.00000	.00000	.00000	.00000	.00000	.00000	.00000

AEDC VA422(IA17) ORB AND ET SEPARATING(ET DATA) (ATR303) (24 JUL 75)

REFERENCE DATA

SREF = 2690.0000 SQ.FT. XMRP = 1360.1000 IN. XT
LREF = 1290.3000 IN. YMRP = .0000 IN. YT
BREF = 1290.3000 IN. ZMRP = 416.4000 IN. ZT
SCALE = .0100

PARAMETRIC DATA

DLT-Y = 60.000 ALPHA = 5.000
BETA = .000 DLTALF = -20.000
DLTBTA = 3.000 MACH = 5.930
AILRON = 15.000 ELEVON = .000
GRID = 12.000

RUN NO. 493/ 0 GRADIENT INTERVAL = -5.00/ 5.00

DLT-X	DLT-Z	CN	CA	CLM	CY	CYN	CBL	XCP/L	YCP/L	CPB
.473	801.010	-.23347	.11150	-.03453	-.04395	-.00953	.00035	.45503	.40680	.00000
.387	900.210	-.23417	.11180	-.03603	-.04240	-.00917	.00034	.45086	.40723	.00000
.497	1000.200	-.23659	.11251	-.03624	-.04501	-.00924	.00036	.45132	.41487	.00000
	GRADIENT	.00000	.00000	.00000	.00000	.00000	.00000	.00000	.00000	.00000

ORIGINAL PAGE IS OF POOR QUALITY

DATE 25 JUL 75 TABULATED SOURCE DATA - IA17A

AEDC VA422(IA17) ORB AND ET SEPARATING(ET DATA) (ATR303) (24 JUL 75)

REFERENCE DATA

SREF = 2690.0000 SQ.FT. XMRP = 1360.1000 IN. XT
LREF = 1290.3000 IN. YMRP = .0000 IN. YT
BREF = 1290.3000 IN. ZMRP = 416.4000 IN. ZT
SCALE = .0100

PARAMETRIC DATA

DLT-Y = 60.000 ALPHA = 5.000
BETA = .000 DLTALF = -20.000
DLTBTA = 3.000 MACH = 5.930
AILRON = 15.000 ELEVON = .000
GRID = 12.000

RUN NO. 467/ 0 GRADIENT INTERVAL = -5.00/ 5.00

DLT-X	DLT-Z	CN	CA	CLM	CY	CYN	CBL	XCP/L	YCP/L	CPB
400.410	750.160	-.23722	.11009	-.03110	-.04496	-.00952	.00032	.46674	.41045	.00000
400.350	800.230	-.23269	.11171	-.03446	-.04431	-.00949	.00035	.45488	.40872	.00000
400.440	900.270	-.23358	.11279	-.03604	-.04549	-.00962	.00037	.45056	.41067	.00000
400.450	1000.200	-.23669	.11262	-.03715	-.04617	-.00984	.00036	.44870	.40947	.00000
	GRADIENT	.00000	.00000	.00000	.00000	.00000	.00000	.00000	.00000	.00000

AEDC VA422(IA17) ORB AND ET SEPARATING(ET DATA) (ATR304) (24 JUL 75)

REFERENCE DATA

SREF = 2690.0000 SQ.FT. XMRP = 1360.1000 IN. XT
LREF = 1290.3000 IN. YMRP = .0000 IN. YT
BREF = 1290.3000 IN. ZMRP = 416.4000 IN. ZT
SCALE = .0100

PARAMETRIC DATA

DLT-Y = 60.000 ALPHA = -5.000
BETA = .000 DLTALF = .000
DLTBTA = 3.000 MACH = 5.930
AILRON = 15.000 ELEVON = .000
GRID = 11.000

RUN NO. 503/ 0 GRADIENT INTERVAL = -5.00/ 5.00

DLT-X	DLT-Z	CN	CA	CLM	CY	CYN	CBL	XCP/L	YCP/L	CPB
.582	19.703	-.10439	.09795	-.01099	-.03916	-.00932	.00050	.48481	.39201	.00000
.516	101.420	-.09518	.09744	-.00829	-.03781	-.01001	.00036	.49748	.37334	.00000
.530	201.890	-.08785	.10226	-.00610	-.03597	-.01144	.00031	.50985	.33605	.00000
.408	301.220	-.07940	.09898	-.01230	-.03604	-.01190	.00029	.45016	.32759	.00000
.576	400.190	-.07534	.09672	-.01570	-.03690	-.01211	.00034	.41280	.32904	.00000
.522	500.300	-.07671	.09463	-.01695	-.03694	-.01176	.00034	.40399	.33591	.00000
.594	600.160	-.07569	.09501	-.01557	-.03551	-.01117	.00033	.41466	.33861	.00000
	GRADIENT	.00000	.00000	.00000	.00000	.00000	.00000	.00000	.00000	.00000

RUN NO. 504/ 0 GRADIENT INTERVAL = -5.00/ 5.00

DLT-X	DLT-Z	CN	CA	CLM	CY	CYN	CBL	XCP/L	YCP/L	CPB
400.440	23.621	-.10203	.09489	-.02522	-.04289	-.01049	.00039	.38566	.38748	.00000
400.540	97.261	-.09429	.09759	-.01061	-.04031	-.01042	.00039	.47976	.37784	.00000
400.390	197.910	-.08312	.09654	-.01075	-.04047	-.01088	.00033	.46799	.37062	.00000
400.380	298.290	-.08364	.10089	-.00829	-.03912	-.01221	.00035	.48907	.34020	.00000
400.410	399.900	-.08275	.10041	-.01135	-.03737	-.01272	.00031	.46256	.32060	.00000
400.380	500.180	-.07622	.09621	-.01575	-.03683	-.01207	.00035	.41398	.32813	.00000
400.430	600.020	-.07439	.09448	-.01588	-.03701	-.01172	.00034	.40925	.33711	.00000
	GRADIENT	.00000	.00000	.00000	.00000	.00000	.00000	.00000	.00000	.00000

AEDC VA422(IA17) ORB AND ET SEPARATING(ET DATA) (ATR305) (24 JUL 75)

REFERENCE DATA

SREF = 2690.0000 SQ.FT. XMRP = 1360.1000 IN. XT
LREF = 1290.3000 IN. YMRP = .0000 IN. YT
BREF = 1290.3000 IN. ZMRP = 416.4000 IN. ZT
SCALE = .0100

PARAMETRIC DATA

DLT-Y = 60.000 ALPHA = -5.000
BETA = .000 DLTALF = -10.000
DLTBTA = 3.000 MACH = 5.930
AILRON = 15.000 ELEVON = .000
GRID = 11.000

RUN NO. 501/ 0 GRADIENT INTERVAL = -5.00/ 5.00

DLT-X	DLT-Z	CN	CA	CLM	CY	CYN	CBL	XCP/L	YCP/L	CPB
.434	403.950	-.27287	.12564	-.01989	-.04458	-.00858	.00040	.50743	.42386	.00000
.455	500.920	-.25885	.11923	-.02826	-.04432	-.00997	.00038	.48207	.40124	.00000
.420	600.310	-.24450	.11165	-.03626	-.04384	-.00882	.00031	.45474	.41784	.00000
.398	750.180	-.24225	.11064	-.03457	-.04284	-.00839	.00034	.45864	.42146	.00000
.247	801.520	-.24170	.11071	-.03437	-.04482	-.00867	.00035	.45900	.42319	.00000
	GRADIENT	.00000	.00000	.00000	.00000	.00000	.00000	.00000	.00000	.00000

RUN NO. 502/ 0 GRADIENT INTERVAL = -5.00/ 5.00

DLT-X	DLT-Z	CN	CA	CLM	CY	CYN	CBL	XCP/L	YCP/L	CPB
400.510	397.100	-.25151	.11296	-.03504	-.04928	-.00942	.00039	.46100	.42475	.00000
400.370	499.440	-.26043	.11723	-.02883	-.04667	-.00901	.00039	.48101	.42348	.00000
400.380	599.940	-.26156	.12175	-.02466	-.04297	-.00968	.00046	.49249	.40098	.00000
400.510	750.240	-.24182	.11078	-.03493	-.04395	-.00880	.00035	.45744	.41845	.00000
400.380	800.200	-.24130	.11066	-.03484	-.04373	-.00849	.00034	.45746	.42267	.00000
	GRADIENT	.00000	.00000	.00000	.00000	.00000	.00000	.00000	.00000	.00000

AEDC VA422(IA17) ORB AND ET SEPARATING(ET DATA) (ATR307) (24 JUL 75)

REFERENCE DATA

SREF = 2690.0000 SQ.FT. XMRP = 1360.1000 IN. XT
LREF = 1290.3000 IN. YMRP = .0000 IN. YT
BREF = 1290.3000 IN. ZMRP = 416.4000 IN. ZT
SCALE = .0100

PARAMETRIC DATA

DLT-Y = 60.000 ALPHA = -5.000
BETA = .000 DLTALF = -20.000
DLTBTA = 3.000 MACH = 5.930
AILRON = 15.000 ELEVON = .000
GRID = 11.000

RUN NO. 508/ 0 GRADIENT INTERVAL = -5.00/ 5.00

DLT-X	DLT-Z	CN	CA	CLM	CY	CYN	CBL	XCP/L	YCP/L	CPB
.481	804.410	-.51065	.14349	-.02084	-.05472	-.00562	.00039	.52982	.49664	.00000
.487	900.940	-.48729	.14503	-.03227	-.05445	-.00595	.00051	.51207	.48202	.00000
.426	1000.400	-.48683	.14427	-.03210	-.05401	-.00578	.00050	.51228	.48362	.00000
	GRADIENT	.00000	.00000	.00000	.00000	.00000	.00000	.00000	.00000	.00000

AEDC VA422(IA17) ORB AND ET SEPARATING(ET DATA) (ATR307) (24 JUL 75)

REFERENCE DATA

SREF = 2690.0000 SQ.FT. XMRP = 1360.1000 IN. XT
LREF = 1290.3000 IN. YMRP = .0000 IN. YT
BREF = 1290.3000 IN. ZMRP = 416.4000 IN. ZT
SCALE = .0100

PARAMETRIC DATA

DLT-Y = 60.000 ALPHA = -5.000
BETA = .000 DLTALF = -20.000
DLTBTA = 3.000 MACH = 5.930
AILRON = 15.000 ELEVON = .000
GRID = 11.000

RUN NO. 500/ 0 GRADIENT INTERVAL = -5.00/ 5.00

DLT-X	DLT-Z	CN	CA	CLM	CY	CYN	CBL	XCP/L	YCP/L	CPB
400.490	751.000	-.52712	.15798	-.01214	-.05677	-.00541	.00044	.54225	.49181	.00000
400.410	800.720	-.51528	.15911	-.01591	-.05404	-.00700	.00048	.53677	.46786	.00000
400.470	900.340	-.49663	.14738	-.02468	-.05498	-.00566	.00030	.52362	.48647	.00000
400.410	1000.400	-.48053	.14279	-.03349	-.05445	-.00566	.00040	.50966	.48574	.00000
	GRADIENT	.00000	.00000	.00000	.00000	.00000	.00000	.00000	.00000	.00000

AEDC VA422(IA17) ORB AND ET SEPARATING(ET DATA) (ATR308) (24 JUL 75)

REFERENCE DATA

SREF = 2690.0000 SQ.FT. XMRP = 1360.1000 IN. XT
LREF = 1290.3000 IN. YMRP = .0000 IN. YT
BREF = 1290.3000 IN. ZMRP = 416.4000 IN. ZT
SCALE = .0100

PARAMETRIC DATA

DLT-Y = 60.000 ALPHA = -10.000
BETA = .000 DLTALF = .000
DLTBTA = 3.000 MACH = 5.930
AILRON = 15.000 ELEVON = .000
GRID = 10.000

RUN NO. 519/ 0 GRADIENT INTERVAL = -5.00/ 5.00

DLT-X	DLT-Z	CN	CA	CLM	CY	CYN	CBL	XCP/L	YCP/L	CPB
.395	31.345	-.17825	.10853	-.02751	-.04278	-.00933	.00060	.45051	.40593	.00000
.475	102.640	-.16692	.10422	-.02699	-.04292	-.00976	.00040	.44536	.39947	.00000
.528	202.130	-.16292	.10420	-.02585	-.04151	-.01016	.00042	.44747	.38742	.00000
.423	300.610	-.16761	.10974	-.01976	-.03987	-.01076	.00038	.47598	.36984	.00000
.433	400.150	-.15331	.10029	-.02605	-.03923	-.01011	.00031	.43965	.37828	.00000
.500	500.240	-.15033	.10013	-.02725	-.03870	-.00986	.00031	.43169	.38041	.00000
	GRADIENT	.00000	.00000	.00000	.00000	.00000	.00000	.00000	.00000	.00000

RUN NO. 520/ 0 GRADIENT INTERVAL = -5.00/ 5.00

DLT-X	DLT-Z	CN	CA	CLM	CY	CYN	CBL	XCP/L	YCP/L	CPB
400.480	32.624	-.15568	.10048	-.04213	-.04538	-.01116	.00046	.36930	.38652	.00000
400.460	103.100	-.15882	.10383	-.03169	-.04362	-.01161	.00030	.41892	.37242	.00000
400.500	201.570	-.15123	.10036	-.03608	-.04263	-.01069	.00040	.39165	.38320	.00000
400.540	300.600	-.15741	.10110	-.02936	-.04131	-.00986	.00038	.42805	.39168	.00000
400.470	400.380	-.16460	.10608	-.02186	-.04009	-.00986	.00037	.46557	.38643	.00000
400.430	500.200	-.16001	.10588	-.02176	-.03859	-.01012	.00038	.46336	.37507	.00000
	GRADIENT	.00000	.00000	.00000	.00000	.00000	.00000	.00000	.00000	.00000

AEDC VA422(IA17) ORB AND ET SEPARATING(ET DATA) (ATR309) (24 JUL 75)

REFERENCE DATA

SREF = 2690.0000 SQ.FT. XMRP = 1360.1000 IN. XT
LREF = 1290.3000 IN. YMRP = .0000 IN. YT
BREF = 1290.3000 IN. ZMRP = 416.4000 IN. ZT
SCALE = .0100

PARAMETRIC DATA

DLT-Y = 60.000 ALPHA = -10.000
BETA = .000 DLTALF = -10.000
DLTBTA = 3.000 MACH = 5.930
AILRON = 15.000 ELEVON = .000
GRID = 10.000

RUN NO. 517/ 0 GRADIENT INTERVAL = -5.00/ 5.00

DLT-X	DLT-Z	CN	CA	CLM	CY	CYN	CBL	XCP/L	YCP/L	CPB
.476	403.280	-.36306	.12526	-.03717	-.05149	-.00652	.00041	.48682	.46991	.00000
.393	501.760	-.37843	.13626	-.02234	-.05020	-.00648	.00025	.51710	.46813	.00000
.373	600.560	-.37010	.13259	-.02558	-.04859	-.00730	.00035	.51005	.45336	.00000
.460	700.210	-.35264	.12454	-.03454	-.04887	-.00675	.00028	.48991	.46192	.00000
.734	801.300	-.34984	.12608	-.03454	-.05035	-.00696	.00028	.48937	.46178	.00000
	GRADIENT	.00000	.00000	.00000	.00000	.00000	.00000	.00000	.00000	.00000

RUN NO. 518/ 0 GRADIENT INTERVAL = -5.00/ 5.00

DLT-X	DLT-Z	CN	CA	CLM	CY	CYN	CBL	XCP/L	YCP/L	CPB
400.460	397.190	-.32498	.11428	-.05993	-.05083	-.00791	.00039	.42951	.44970	.00000
400.350	499.400	-.34769	.12008	-.04498	-.05122	-.00629	.00038	.46796	.47257	.00000
400.320	600.160	-.36489	.12745	-.03083	-.05127	-.00617	.00035	.49931	.47427	.00000
400.250	700.170	-.37229	.13558	-.02254	-.04960	-.00803	.00033	.51604	.44520	.00000
400.410	800.180	-.35971	.12542	-.03060	-.04836	-.00679	.00025	.49891	.46023	.00000
	GRADIENT	.00000	.00000	.00000	.00000	.00000	.00000	.00000	.00000	.00000

AEDC VA422(IA17) ORB AND ET SEPARATING(ET DATA) (ATR310) (24 JUL 75)

REFERENCE DATA

SREF = 2690.0000 SQ.FT. XMRP = 1360.1000 IN. XT
LREF = 1290.3000 IN. YMRP = .0000 IN. YT
BREF = 1290.3000 IN. ZMRP = 416.4000 IN. ZT
SCALE = .0100

PARAMETRIC DATA

DLT-Y = 60.000 ALPHA = .000
BETA = 3.000 DLTALF = .000
DLTBTA = 3.000 MACH = 5.930
AILRON = .000 ELEVON = 15.000
GRID = 14.000

RUN NO. 588/ 0 GRADIENT INTERVAL = -5.00/ 5.00

DLT-X	DLT-Z	CN	CA	CLM	CY	CYN	CBL	XCP/L	YCP/L	CPB
.537	18.844	-.04314	.09550	.00950	-.07921	-.01946	.00072	.71220	.38666	.00000
.493	99.509	-.03640	.09436	.00890	-.07468	-.01954	.00070	.72912	.37553	.00000
.563	200.710	-.01951	.09418	.00827	-.07081	-.02225	.00038	.85452	.33878	.00000
.589	302.020	-.00887	.08929	.00127	-.07373	-.02165	.00055	.65822	.35323	.00000
.523	401.230	-.00792	.09008	.00169	-.07395	-.02193	.00056	.70733	.35117	.00000
.520	500.100	-.00856	.09187	.00183	-.07561	-.02280	.00057	.70783	.34771	.00000
.794	597.200	-.00968	.09122	.00137	-.07639	-.02334	.00057	.65706	.34488	.00000
	GRADIENT	.00000	.00000	.00000	.00000	.00000	.00000	.00000	.00000	.00000

AEDC VA422(IA17) ORB AND ET SEPARATING(ET DATA) (ATR311) (24 JUL 75)

REFERENCE DATA

SREF = 2690.0000 SQ.FT. XMRP = 1360.1000 IN. XT
LREF = 1290.3000 IN. YMRP = .0000 IN. YT
BREF = 1290.3000 IN. ZMRP = 416.4000 IN. ZT
SCALE = .0100

PARAMETRIC DATA

DLT-Y = 60.000 ALPHA = .000
BETA = 3.000 DLTALF = -10.000
DLTBTA = 3.000 MACH = 5.930
AILRON = .000 ELEVON = 15.000
GRID = 14.000

RUN NO. 585/ 0 GRADIENT INTERVAL = -5.00/ 5.00

DLT-X	DLT-Z	CN	CA	CLM	CY	CYN	CBL	XCP/L	YCP/L	CPB
.457	403.700	-.17068	.10906	-.01137	-.08037	-.01987	.00051	.51180	.38565	.00000
.527	501.860	-.14940	.10062	-.02436	-.08082	-.02027	.00050	.44443	.38313	.00000
.513	600.220	-.14697	.10194	-.02641	-.08305	-.02048	.00057	.43280	.38608	.00000
.550	750.040	-.14906	.10195	-.02662	-.08270	-.02056	.00056	.43359	.38464	.00000
-.064	802.250	-.15090	.10214	-.02649	-.08365	-.02068	.00057	.43569	.38559	.00000
	GRADIENT	.00000	.00000	.00000	.00000	.00000	.00000	.00000	.00000	.00000

AEDC VA422(IA17) ORB AND ET SEPARATING(ET DATA) (ATR312) (24 JUL 75)

REFERENCE DATA

SREF = 2690.0000 SQ.FT. XMRP = 1380.1000 IN. XT
LREF = 1290.3000 IN. YMRP = .0000 IN. YT
BREF = 1290.3000 IN. ZMRP = 416.4000 IN. ZT
SCALE = .0100

PARAMETRIC DATA

DLT-Y = 60.000 ALPHA = .000
BETA = 3.000 DLTALF = -20.000
DLTBTA = 3.000 MACH = 5.930
AILRON = .000 ELEVON = 15.000
GRID = 14.000

RUN NO. 584/ 0 GRADIENT INTERVAL = -5.00/ 5.00

DLT-X	DLT-Z	CN	CA	CLM	CY	CYN	CBL	XCP/L	YCP/L	CPB
.406	802.260	-.35368	.12728	-.03425	-.10285	-.01582	.00067	.49070	.45084	.00000
.492	900.500	-.35650	.12771	-.03315	-.10253	-.01519	.00071	.49338	.45483	.00000
.467	1000.200	-.35731	.12819	-.03202	-.10194	-.01484	.00065	.49573	.45661	.00000
	GRADIENT	.00000	.00000	.00000	.00000	.00000	.00000	.00000	.00000	.00000

AEDC VA422(IA17) ORB AND ET SEPARATING(ET DATA) (ATR313) (24 JUL 75)

REFERENCE DATA

SREF = 2690.0000 SQ.FT. XMRP = 1360.1000 IN. XT
LREF = 1290.3000 IN. YMRP = .0000 IN. YT
BREF = 1290.3000 IN. ZMRP = 416.4000 IN. ZT
SCALE = .0100

PARAMETRIC DATA

DLT-Y = 60.000 ALPHA = .000
BETA = .000 DLTALF = .000
DLTBTA = 3.000 MACH = 5.930
AILRON = .000 ELEVON = 15.000
GRID = 13.000

RUN NO. 576/ 0 GRADIENT INTERVAL = -5.00/ 5.00

DLT-X	DLT-Z	CN	CA	CLM	CY	CYN	CBL	XCP/L	YCP/L	CPB
.515	18.967	-.04185	.09247	.00780	-.03792	-.01012	.00040	.68848	.37181	.00000
.424	99.569	-.03540	.09137	.00785	-.03679	-.01048	.00040	.71323	.35927	.00000
.470	200.460	-.02440	.09410	.01110	-.03395	-.01216	.00014	.87616	.30811	.00000
.587	302.060	-.00868	.08767	.00208	-.03530	-.01171	.00029	.72561	.32654	.00000
.597	401.030	-.00868	.08971	.00298	-.03637	-.01189	.00029	.79790	.32994	.00000
.633	500.120	-.00996	.09148	.00253	-.03635	-.01205	.00031	.73605	.32678	.00000
.588	597.340	-.01107	.09235	.00178	-.03599	-.01218	.00031	.67080	.32201	.00000
	GRADIENT	.00000	.00000	.00000	.00000	.00000	.00000	.00000	.00000	.00000

RUN NO. 577/ 0 GRADIENT INTERVAL = -5.00/ 5.00

DLT-X	DLT-Z	CN	CA	CLM	CY	CYN	CBL	XCP/L	YCP/L	CPB
400.460	22.275	-.05090	.09324	-.00562	-.04613	-.01060	.00033	.48127	.39786	.00000
400.460	101.260	-.04422	.09311	.00928	-.03959	-.00978	.00032	.70490	.38614	.00000
400.440	202.210	-.02932	.09113	.01075	-.03609	-.01151	.00023	.81459	.33561	.00000
400.520	301.270	-.01771	.09128	.00768	-.03486	-.01199	.00019	.86125	.31804	.00000
400.490	400.140	-.00904	.08864	.00328	-.03636	-.01222	.00029	.81165	.32344	.00000
400.550	500.120	-.00938	.09054	.00315	-.03686	-.01273	.00031	.79312	.31707	.00000
400.620	597.330	-.01048	.09113	.00180	-.03818	-.01345	.00034	.67863	.31233	.00000
	GRADIENT	.00000	.00000	.00000	.00000	.00000	.00000	.00000	.00000	.00000

AEDC VA422(IA17) ORB AND ET SEPARATING(ET DATA) (ATR314) (24 JUL 75)

REFERENCE DATA

SREF = 2690.0000 SQ.FT. XMRP = 1360.1000 IN. XT
LREF = 1290.3000 IN. YMRP = .0000 IN. YT
BREF = 1290.3000 IN. ZMRP = 416.4000 IN. ZT
SCALE = .0100

PARAMETRIC DATA

DLT-Y = 60.000 ALPHA = .000
BETA = .000 DLTALF = -10.000
DLTBTA = 3.000 MACH = 5.930
AILRON = .000 ELEVON = 15.000
GRID = 13.000

RUN NO. 574/ 0 GRADIENT INTERVAL = -5.00/ 5.00

DLT-X	DLT-Z	CN	CA	CLM	CY	CYN	CBL	XCP/L	YCP/L	CPB
.468	403.640	-.16753	.11064	-.01118	-.03634	-.01019	.00034	.51179	.36248	.00000
.465	501.810	-.14806	.10076	-.02504	-.03827	-.01060	.00028	.44020	.36475	.00000
.470	600.230	-.14526	.10259	-.02820	-.03738	-.00977	.00028	.42270	.37575	.00000
.491	749.950	-.14768	.10310	-.02901	-.03977	-.01044	.00029	.42108	.37491	.00000
-.149	802.520	-.15078	.10213	-.02941	-.04076	-.01076	.00030	.42207	.37388	.00000
	GRADIENT	.00000	.00000	.00000	.00000	.00000	.00000	.00000	.00000	.00000

RUN NO. 575/ 0 GRADIENT INTERVAL = -5.00/ 5.00

DLT-X	DLT-Z	CN	CA	CLM	CY	CYN	CBL	XCP/L	YCP/L	CPB
400.380	396.780	-.17289	.10927	-.01001	-.03845	-.00904	.00030	.51789	.39402	.00000
400.330	498.280	-.16087	.10982	-.01480	-.03878	-.01046	.00034	.49407	.36989	.00000
400.370	600.200	-.14559	.10141	-.02613	-.03937	-.01063	.00030	.43297	.36976	.00000
400.550	750.300	-.14773	.10209	-.02905	-.03889	-.01095	.00031	.42098	.36158	.00000
400.460	800.170	-.14759	.10177	-.02878	-.03894	-.01040	.00031	.42210	.37170	.00000
	GRADIENT	.00000	.00000	.00000	.00000	.00000	.00000	.00000	.00000	.00000

AEDC VA422(IA17) ORB AND ET SEPARATING(ET DATA) (ATR316) (24 JUL 75)

REFERENCE DATA

SREF = 2690.0000 SQ.FT. XMRP = 1360.1000 IN. XT
LREF = 1290.3000 IN. YMRP = .0000 IN. YT
BREF = 1290.3000 IN. ZMRP = 416.4000 IN. ZT
SCALE = .0100

PARAMETRIC DATA

DLT-Y = 60.000 ALPHA = .000
BETA = .000 DLTALF = -20.000
DLTBTA = 3.000 MACH = 5.930
AILRON = .000 ELEVON = 15.000
GRID = 13.000

RUN NO. 579/ 0 GRADIENT INTERVAL = -5.00/ 5.00

DLT-X	DLT-Z	CN	CA	CLM	CY	CYN	CBL	XCP/L	YCP/L	CPB
.457	802.450	-.34989	.12454	-.03990	-.04893	-.00740	.00027	.47864	.45275	.00000
.528	900.620	-.35102	.12392	-.03955	-.04934	-.00741	.00026	.47963	.45341	.00000
.485	1000.300	-.35211	.12459	-.03691	-.04849	-.00682	.00026	.48511	.46009	.00000
	GRADIENT	.00000	.00000	.00000	.00000	.00000	.00000	.00000	.00000	.00000

AEDC VA422(IA17) ORB AND ET SEPARATING(ET DATA) (ATR316) (24 JUL 75)

REFERENCE DATA

SREF = 2690.0000 SQ.FT. XMRP = 1360.1000 IN. XT
LREF = 1290.3000 IN. YMRP = .0000 IN. YT
BREF = 1290.3000 IN. ZMRP = 416.4000 IN. ZT
SCALE = .0100

PARAMETRIC DATA

DLT-Y = 60.000 ALPHA = .000
BETA = .000 DLTALF = -20.000
DLTBTA = 3.000 MACH = 5.930
AILRON = .000 ELEVON = 15.000
GRID = 13.000

RUN NO. 573/ 0 GRADIENT INTERVAL = -5.00/ 5.00

DLT-X	DLT-Z	CN	CA	CLM	CY	CYN	CBL	XCP/L	YCP/L	CPB
400.390	750.340	-.37349	.13573	-.02479	-.04836	-.00847	.00036	.51196	.43603	.00000
400.420	800.270	-.36333	.13002	-.03096	-.05065	-.00819	.00024	.49880	.44536	.00000
400.490	900.480	-.35110	.12622	-.03813	-.04986	-.00749	.00029	.48247	.45337	.00000
400.440	1000.200	-.34986	.12571	-.03655	-.04733	-.00690	.00030	.48535	.45649	.00000
	GRADIENT	.00000	.00090	.00000	.00000	.00000	.00000	.00000	.00000	.00000

AEDC VA422(IA17) ORB AND ET SEPARATING(ET DATA) (ATR317) (24 JUL 75)

REFERENCE DATA

SREF = 2690.0000 SQ.FT. XMRP = 1360.1000 IN. XT
LREF = 1290.3000 IN. YMRP = .0000 IN. YT
BREF = 1290.3000 IN. ZMRP = 416.4000 IN. ZT
SCALE = .0100

PARAMETRIC DATA

DLT-Y = 60.000 ALPHA = 5.000
BETA = .000 DLTALF = .000
DLTBTA = 3.000 MACH = 5.930
AILRON = .000 ELEVON = 15.000
GRID = 12.000

RUN NO. 563/ 0 GRADIENT INTERVAL = -5.00/ 5.00

DLT-X	DLT-Z	CN	CA	CLM	CY	CYN	CBL	XCP/L	YCP/L	CPB
.522	19.396	.01468	.09232	.02820	-.03754	-.01004	.00047	-.78496	.37153	.00000
.528	98.260	.02361	.09120	.02694	-.03372	-.01045	.00041	-.23894	.34187	.00000
.629	199.100	.03688	.09061	.02715	-.03416	-.01143	.00011	.04404	.32456	.00000
.635	300.030	.05311	.08678	.01924	-.03550	-.01080	.00032	.30520	.34573	.00000
.609	402.100	.05264	.08770	.01904	-.03590	-.01082	.00033	.30570	.34781	.00000
.542	501.290	.05334	.08768	.01877	-.03619	-.01062	.00033	.31245	.35328	.00000
.655	598.620	.05352	.08852	.01965	-.03805	-.01107	.00034	.30190	.35512	.00000
	GRADIENT	.00000	.00000	.00000	.00000	.00000	.00000	.00000	.00000	.00000

RUN NO. 564/ 0 GRADIENT INTERVAL = -5.00/ 5.00

DLT-X	DLT-Z	CN	CA	CLM	CY	CYN	CBL	XCP/L	YCP/L	CPB
400.440	19.915	.00635	.09514	.01268	-.04562	-.00854	.00035	-.83608	.42758	.00000
400.450	98.715	.01056	.09351	.02848	-.03674	-.00910	.00036	-1.32530	.38536	.00000
400.410	200.100	.02575	.09556	.03250	-.03419	-.01221	.00007	-.32349	.30890	.00000
400.540	299.080	.05109	.08677	.02013	-.03541	-.01087	.00030	.28299	.34392	.00000
400.470	398.090	.05336	.08747	.01925	-.03707	-.01100	.00033	.30626	.35094	.00000
400.450	499.230	.05259	.08785	.01937	-.03683	-.01104	.00033	.30106	.34896	.00000
400.670	599.880	.05317	.08805	.02035	-.03785	-.01140	.00035	.29091	.34787	.00000
	GRADIENT	.00000	.00000	.00000	.00000	.00000	.00000	.00000	.00000	.00000

ORIGINAL PAGE IS OF POOR QUALITY

AEDC VA422(IA17) ORB AND ET SEPARATING(ET DATA) (ATR318) (24 JUL 75)

REFERENCE DATA

SREF = 2690.0000 SQ.FT. XMRP = 1360.1000 IN. XT
LREF = 1290.3000 IN. YMRP = .0000 IN. YT
BREF = 1290.3000 IN. ZMRP = 416.4000 IN. ZT
SCALE = .0100

PARAMETRIC DATA

DLT-Y = 60.000 ALPHA = 5.000
BETA = .000 DLTALF = -10.000
DLTBTA = 3.000 MACH = 5.930
AILRON = .000 ELEVON = 15.000
GRID = 12.000

RUN NO. 561/ 0 GRADIENT INTERVAL = -5.00/ 5.00

DLT-X	DLT-Z	CN	CA	CLM	CY	CYN	CBL	XCP/L	YCP/L	CPB
.472	401.060	-.08970	.09751	-.00040	-.03337	-.01135	.00018	.55525	.32061	.00000
.450	502.700	-.06832	.09308	-.01375	-.03497	-.01127	.00029	.41769	.33326	.00000
.474	601.870	-.06727	.09396	-.01412	-.03443	-.01083	.00029	.41172	.33851	.00000
.574	750.020	-.06665	.09611	-.01342	-.03455	-.01118	.00029	.41772	.33214	.00000
-.557	803.280	-.06909	.09719	-.01404	-.03557	-.01130	.00031	.41637	.33632	.00000
	GRADIENT	.00000	.00000	.00000	.00000	.00000	.00000	.00000	.00000	.00000

RUN NO. 562/ 0 GRADIENT INTERVAL = -5.00/ 5.00

DLT-X	DLT-Z	CN	CA	CLM	CY	CYN	CBL	XCP/L	YCP/L	CPB
400.450	398.260	-.11415	.10626	.01293	-.03362	-.01080	.00009	.63745	.33399	.00000
400.570	497.690	-.07248	.09263	-.01073	-.03403	-.01121	.00025	.45496	.32817	.00000
400.450	599.040	-.06667	.09302	-.01336	-.03501	-.01121	.00031	.4183[illegible]	.33471	.00000
400.610	750.080	-.06598	.09572	-.01300	-.03554	-.01146	.00031	.4[illegible]	.33315	.00000
400.510	800.050	-.06671	.09665	.01[illegible]	-.03619	-.01191	.00032	.41949	.32847	.00000
	GRADIENT	.00000	.00000	.00000	.00000	.00000	.00000	.00000	.00000	.00000

AEDC VA422(IA17) ORB AND ET SEPARATING(ET DATA) (ATR320) (24 JUL 75)

REFERENCE DATA

SREF = 2690.0000 SQ.FT. XMRP = 1360.1000 IN. XT
LREF = 1290.3000 IN. YMRP = .0000 IN. YT
BREF = 1290.3000 IN. ZMRP = 416.4000 IN. ZT
SCALE = .0100

PARAMETRIC DATA

DLT-Y = 60.000 ALPHA = 5.000
BETA = .000 DLTALF = -20.000
DLTBTA = 3.000 MACH = 5.930
AILRON = .000 ELEVON = 15.000
GRID = 12.000

RUN NO. 566/ 0 GRADIENT INTERVAL = -5.00/ 5.00

DLT-X	DLT-Z	CN	CA	CLM	CY	CYN	CBL	XCP/L	YCP/L	CPB
.446	801.690	-.23079	.11239	-.03434	-.04286	-.00901	.00032	.45438	.41151	.00000
.406	900.220	-.23224	.11259	-.03586	-.04113	-.00869	.00029	.45047	.41080	.00000
.448	1000.100	-.23400	.11349	-.03616	-.04277	-.00846	.00032	.45039	.42020	.00000
	GRADIENT	.00000	.00000	.00000	.00000	.00000	.00000	.00000	.00000	.00000

AEDC VA422(IA17) ORB AND ET SEPARATING(ET DATA) (ATR320) (24 JUL 75)

REFERENCE DATA

SREF = 2690.0000 SQ.FT. XMRP = 1360.1000 IN. XT
LREF = 1290.3000 IN. YMRP = .0000 IN. YT
BREF = 1290.3000 IN. ZMRP = 416.4000 IN. ZT
SCALE = .0100

PARAMETRIC DATA

DLT-Y = 60.000 ALPHA = 5.000
BETA = .000 DLTALF = -20.000
DLTBTA = 3.000 MACH = 5.930
AILRON = .000 ELEVON = 15.000
GRID = 12.000

RUN NO. 560/ 0 GRADIENT INTERVAL = -5.00/ 5.00

DLT-X	DLT-Z	CN	CA	CLM	CY	CYN	CBL	XCP/L	YCP/L	CPB
400.420	750.210	-.23616	.11170	-.03095	-.04220	-.00881	.00028	.46677	.41256	.00000
400.520	800.130	-.23100	.11188	-.03430	-.04170	-.00886	.00030	.45460	.40996	.00000
400.470	900.220	-.23261	.11366	-.03594	-.04336	-.00907	.00032	.45038	.41218	.00000
400.530	1000.300	-.23463	.11357	-.03707	-.04369	-.00911	.00031	.44796	.41269	.00000
	GRADIENT	.00000	.00000	.00000	.00000	.00000	.00000	.00000	.00000	.00000

AEDC VA422(IA17) ORB AND ET SEPARATING(ET DATA) (ATR321) (24 JUL 75)

REFERENCE DATA

SREF = 2690.0000 SQ.FT. XMRP = 1360.1000 IN. XT
LREF = 1290.3000 IN. YMRP = .0000 IN. YT
BREF = 1290.3000 IN. ZMRP = 416.4000 IN. ZT
SCALE = .0100

PARAMETRIC DATA

DLT-Y = 60.000 ALPHA = -5.000
BETA = .000 DLTALF = .000
DLTBTA = 3.000 MACH = 5.930
AILRON = .000 ELEVON = 15.000
GRID = 11.000

RUN NO. 550/ 0 GRADIENT INTERVAL = -5.00/ 5.00

DLT-X	DLT-Z	CN	CA	CLM	CY	CYN	CBL	XCP/L	YCP/L	CPB
.455	19.650	-.10099	.09679	-.01155	-.04065	-.00948	.00049	.47846	.39548	.00000
.504	101.320	-.09191	.09714	-.00845	-.03893	-.01014	.00036	.49414	.37630	.00000
.414	201.800	-.08377	.10181	-.00606	-.03704	-.01165	.00031	.50784	.33851	.00000
.531	301.280	-.07680	.09867	-.01184	-.03757	-.01213	.00031	.45063	.33280	.00000
.528	400.220	-.07300	.09648	-.01560	-.03730	-.01191	.00034	.40901	.33529	.00000
.537	500.320	-.07557	.09411	-.01680	-.03675	-.01178	.00032	.40307	.33447	.00000
.577	600.230	-.07441	.09389	-.01538	-.03722	-.01141	.00033	.41394	.34416	.00000
	GRADIENT	.00000	.00000	.00000	.00000	.00000	.00000	.00000	.00000	.00000

RUN NO. 551/ 0 GRADIENT INTERVAL = -5.00/ 5.00

DLT-X	DLT-Z	CN	CA	CLM	CY	CYN	CBL	XCP/L	YCP/L	CPB
400.430	22.992	-.10249	.09385	-.02472	-.04498	-.01022	.00039	.38987	.39959	.00000
400.500	102.450	-.09697	.09807	-.00977	-.04141	-.01056	.00035	.48795	.38013	.00000
400.360	201.850	-.08247	.09650	-.01076	-.04017	-.01069	.00033	.46721	.37239	.00000
400.410	300.490	-.08410	.10052	-.00826	-.03983	-.01245	.00033	.48971	.33993	.00000
400.490	400.040	-.08036	.09994	-.01101	-.03785	-.01283	.00031	.46270	.32147	.00000
400.420	500.190	-.07480	.09571	-.01561	-.03743	-.01216	.00034	.41255	.33134	.00000
400.370	600.190	-.07362	.09365	-.01575	-.03743	-.01175	.00033	.40887	.33914	.00000
	GRADIENT	.00000	.00000	.00000	.00000	.00000	.00000	.00000	.00000	.00000

ORIGINAL PAGE IS OF POOR QUALITY

AEDC VA422(IA17) ORB AND ET SEPARATING(ET DATA) (ATR322) (24 JUL 75)

REFERENCE DATA

SREF = 2690.0000 SQ.FT. XMRP = 1360.1000 IN. XT
LREF = 1290.3000 IN. YMRP = .0000 IN. YT
BREF = 1290.3000 IN. ZMRP = 416.4000 IN. ZT
SCALE = .0100

PARAMETRIC DATA

DLT-Y = 60.000 ALPHA = -5.000
BETA = .000 DLTALF = -10.000
DLTBTA = 3.000 MACH = 5.930
AILRON = .000 ELEVON = 15.000
GRID = 11.000

RUN NO. 548/ 0 GRADIENT INTERVAL = -5.00/ 5.00

DLT-X	DLT-Z	CN	CA	CLM	CY	CYN	CBL	XCP/L	YCP/L	CPB
.494	404.000	-.27094	.12550	-.01996	-.04696	-.00892	.00040	.50686	.42569	.00000
.371	501.140	-.25696	.11883	-.02808	-.04493	-.00986	.00038	.48200	.40504	.00000
.510	600.270	-.24281	.11112	-.03617	-.04588	-.00923	.00032	.45427	.41784	.00000
.454	750.170	-.24130	.11028	-.03445	-.04377	-.00852	.00033	.45861	.42241	.00000
.184	801.570	-.24012	.11054	-.03432	-.04609	-.00900	.00035	.45850	.42197	.00000
	GRADIENT	.00000	.00000	.00000	.00000	.00000	.00000	.00000	.00000	.00000

RUN NO. 549/ 0 GRADIENT INTERVAL = -5.00/ 5.00

DLT-X	DLT-Z	CN	CA	CLM	CY	CYN	CBL	XCP/L	YCP/L	CPB
400.400	397.000	-.25158	.11352	-.03453	-.04883	-.00915	.00038	.46247	.42743	.00000
400.420	499.300	-.25983	.11711	-.02877	-.04680	-.00900	.00040	.48098	.42390	.00000
400.460	599.950	-.26022	.12119	-.02452	-.04283	-.00974	.00045	.49251	.39952	.00000
400.450	750.220	-.23982	.11059	-.03496	-.04405	-.00864	.00034	.45651	.42128	.00000
400.320	800.160	-.23922	.11004	-.03477	-.04405	-.00848	.00033	.45679	.42380	.00000
	GRADIENT	.00000	.00000	.00000	.00000	.00000	.00000	.00000	.00000	.00000

AEDC VA422(IA17) ORB AND ET SEPARATING(ET DATA) (ATR324) (24 JUL 75)

REFERENCE DATA

SREF = 2690.0000 SQ.FT. XMRP = 1360.1000 IN. XT
LREF = 1290.3000 IN. YMRP = .0000 IN. YT
BREF = 1290.3000 IN. ZMRP = 416.4000 IN. ZT
SCALE = .0100

PARAMETRIC DATA

DLT-Y = 60.000 ALPHA = -5.000
BETA = .000 DLTALF = -20.000
DLTBTA = 3.000 MACH = 5.930
AILRON = .000 ELEVON = 15.000
GRID = 11.000

RUN NO. 553/ 0 GRADIENT INTERVAL = -5.00/ 5.00

DLT-X	DLT-Z	CN	CA	CLM	CY	CYN	CBL	XCP/L	YCP/L	CPB
.434	804.190	-.50984	.14316	-.02032	-.05540	-.00579	.00038	.53049	.48530	.00000
.357	901.270	-.48668	.14396	-.03219	-.05477	-.00582	.00051	.51213	.48413	.00000
.492	1000.300	-.48538	.14357	-.03201	-.05437	-.00584	.00049	.51227	.48334	.00000
	GRADIENT	.00000	.00000	.00000	.00000	.00000	.00000	.00000	.00000	.00000

AEDC VA422(IA17) ORB AND ET SEPARATIN0(ET DATA) (ATR324) (24 JUL 75)

REFERENCE DATA

SREF = 2690.0000 SQ.FT. XMRP = 1360.1000 IN. XT
LREF = 1290.3000 IN. YMRP = .0000 IN. YT
BREF = 1290.3000 IN. ZMRP = 416.4000 IN. ZT
SCALE = .0100

PARAMETRIC DATA

DLT-Y = 60.000 ALPHA = -5.000
BETA = .000 DLTALF = -20.000
DLTBTA = 3.000 MACH = 5.930
AILRON = .000 ELEVON = 15.000
GRID = 11.000

RUN NO. 547/ 0 GRADIENT INTERVAL = -5.00/ 5.00

DLT-X	DLT-Z	CN	CA	CLM	CY	CYN	CBL	XCP/L	YCP/L	CPB
400.400	751.770	-.55633	.17372	.00545	-.05992	-.00475	.00097	.56518	.50298	.00000
400.340	800.640	-.51459	.15908	-.01593	-.05399	-.00720	.00048	.53672	.46512	.00000
400.430	900.350	-.49964	.14686	-.02446	-.05561	-.00594	.00029	.52414	.48374	.00000
400.280	1000.400	-.48158	.14206	-.03335	-.05483	-.00556	.00040	.50996	.48752	.00000
	GRADIENT	.00000	.00000	.00000	.00000	.00000	.00000	.00000	.00000	.00000

AEDC VA422(IA17) ORB AND ET SEPARATING(ET DATA) (ATR325) (24 JUL 75)

REFERENCE DATA

SREF = 2690.0000 SQ.FT. XMRP = 1360.1000 IN. XT
LREF = 1290.3000 IN. YMRP = .0000 IN. YT
BREF = 1290.3000 IN. ZMRP = 416.4000 IN. ZT
SCALE = .0100

PARAMETRIC DATA

DLT-Y = 60.000 ALPHA = -10.000
BETA = .000 DLTALF = .000
DLTBTA = 3.000 MACH = 5.930
AILRON = .000 ELEVON = 15.000
GRID = 10.000

RUN NO. 539/ 0 GRADIENT INTERVAL = -5.00/ 5.00

DLT-X	DLT-Z	CN	CA	CLM	CY	CYN	CBL	XCP/L	YCP/L	CPB
.504	31.482	-.17937	.10705	-.02740	-.04199	-.00950	.00061	.45163	.40020	.00000
.471	102.550	-.16705	.10305	-.02682	-.04293	-.00983	.00039	.44617	.39843	.00000
.495	202.180	-.16536	.10333	-.02568	-.04328	-.01050	.00042	.44986	.38883	.00000
.425	300.500	-.16614	.10815	-.01975	-.04033	-.01085	.00036	.47528	.37036	.00000
.384	400.150	-.15359	.09887	-.02611	-.03964	-.01008	.00031	.43958	.38067	.00000
.463	500.290	-.15133	.09851	-.02719	-.03966	-.00993	.00031	.43281	.38332	.00000
	GRADIENT	.00000	.00000	.00000	.00000	.00000	.00000	.00000	.00000	.00000

RUN NO. 540/ 0 GRADIENT INTERVAL = -5.00/ 5.00

DLT-X	DLT-Z	CN	CA	CLM	CY	CYN	CBL	XCP/L	YCP/L	CPB
400.450	32.573	-.15827	.09927	-.04075	-.04603	-.01026	.00046	.37846	.40259	.00000
400.450	103.100	-.16069	.10281	-.03152	-.04327	-.01168	.00030	.42129	.36973	.00000
400.510	201.450	-.15001	.09852	-.03586	-.04275	-.01054	.00041	.39132	.38614	.00000
400.510	300.540	-.15743	.10031	-.02912	-.04177	-.00998	.00039	.42909	.39138	.00000
400.440	400.340	-.16357	.10418	-.02171	-.04109	-.01014	.00037	.46563	.38599	.00000
400.390	500.230	-.16102	.10399	-.02184	-.03832	-.01017	.00036	.46358	.37287	.00000
	GRADIENT	.00000	.00000	.00000	.00000	.00000	.00000	.00000	.00000	.00000

AEDC VA422(IA17) ORB AND ET SEPARATING(ET DATA) (ATR326) (24 JUL 75)

REFERENCE DATA

SREF = 2690.0000 SQ.FT. XMRP = 1360.1000 IN. XT
LREF = 1290.3000 IN. YMRP = .0000 IN. YT
BREF = 1290.3000 IN. ZMRP = 416.4000 IN. ZT
SCALE = .0100

PARAMETRIC DATA

DLT-Y = 60.000 ALPHA = -10.000
BETA = .000 DLTALF = -10.000
DLTBTA = 3.000 MACH = 5.930
AILRON = .000 ELEVON = 15.000
GRID = 10.000

RUN NO. 537/ 0 GRADIENT INTERVAL = -5.00/ 5.00

DLT-X	DLT-Z	CN	CA	CLM	CY	CYN	CBL	XCP/L	YCP/L	CPB
.451	403.210	-.36357	.12380	-.03699	-.05240	-.00680	.00042	.48727	.46771	.00000
.298	501.850	-.38162	.13374	-.02132	-.04977	-.00662	.00030	.51932	.46540	.00000
.420	600.610	-.37025	.12958	-.02568	-.04922	-.00731	.00035	.50989	.45455	.00000
.431	700.170	-.35290	.12278	-.03485	-.04844	-.00670	.00026	.48935	.46172	.00000
.699	801.570	-.35162	.12431	-.03448	-.05060	-.00730	.00028	.48984	.45758	.00000
	GRADIENT	.00000	.00000	.00000	.00000	.00000	.00000	.00000	.00000	.00000

RUN NO. 538/ 0 GRADIENT INTERVAL = -5.00/ 5.00

DLT-X	DLT-Z	CN	CA	CLM	CY	CYN	CBL	XCP/L	YCP/L	CPB
400.480	397.230	-.32679	.11315	-.05955	-.05043	-.00780	.00041	.43104	.45024	.00000
400.340	499.400	-.34833	.11919	-.04459	-.05135	-.00627	.00039	.46890	.47299	.00000
400.390	600.140	-.36616	.12663	-.03033	-.05220	-.00642	.00033	.50048	.47243	.00000
400.340	700.200	-.37340	.13360	-.02264	-.04742	-.00771	.00034	.51599	.44468	.00000
400.390	800.140	-.35893	.12346	-.03078	-.04923	-.00669	.00025	.49844	.46342	.00000
	GRADIENT	.00000	.00000	.00000	.00000	.00000	.00000	.00000	.00000	.00000

AEDC VA422(IA17) ORB AND ET SEPARATING(ET DATA) (ATR327) (24 JUL 75)

REFERENCE DATA

SREF = 2690.0000 SQ.FT. XMRP = 1360.1000 IN. XT
LREF = 1290.3000 IN. YMRP = .0000 IN. YT
BREF = 1290.3000 IN. ZMRP = 416.4000 IN. ZT
SCALE = .0100

PARAMETRIC DATA

DLT-Y = 60.000 ALPHA = 10.000
BETA = .000 DLTALF = -10.000
DLTBTA = .000 MACH = 5.930
AILRON = .000 ELEVON = .000
GRID = 23.000

RUN NO. 650/ 0 GRADIENT INTERVAL = -5.00/ 5.00

DLT-X	DLT-Z	CN	CA	CLM	CY	CYN	CBL	XCP/L	YCP/L	CPB
.521	399.490	-.03715	.09376	.02108	.00290	-.00037	.00029	.95480	.00000	.00000
.610	500.580	-.00644	.08515	.00326	.00244	.00001	.00000	.91161	.00000	.00000
.611	599.770	-.00621	.08759	.00290	.00154	-.00017	.00002	.88491	.00000	.00000
.552	697.940	-.00576	.08724	.00292	.00240	.00020	-.00000	.91233	.00000	.00000
.612	798.170	-.00600	.08812	.00309	.00055	-.00030	.00003	.91804	.00000	.00000
	GRADIENT	.00000	.00000	.00000	.00000	.00000	.00000	.00000	.00000	.00000

AEDC VA422(IA17) ORB AND ET SEPARATING(ET DATA) (ATR327) (24 JUL 75)

REFERENCE DATA

SREF = 2690.0000 SQ.FT. XMRP = 1360.1000 IN. XT
LREF = 1290.3000 IN. YMRP = .0000 IN. YT
BREF = 1290.3000 IN. ZMRP = 416.4000 IN. ZT
SCALE = .0100

PARAMETRIC DATA

DLT-Y = 60.000 ALPHA = 10.000
BETA = .000 DLTALF = -10.000
DLTBTA = .000 MACH = 5.930
AILRON = .000 ELEVON = .000
GRID = 23.000

RUN NO. 649/ 0 GRADIENT INTERVAL = -5.00/ 5.00

DLT-X	DLT-Z	CN	CA	CLM	CY	CYN	CBL	XCP/L	YCP/L	CPB
200.500	400.100	-.04846	.09903	.02738	.00180	.00009	.00037	.95282	.00000	.00000
200.590	502.010	-.00687	.08527	.00282	.00205	-.00005	.00000	.84550	.00000	.00000
200.510	602.010	-.00742	.08764	.00252	.00122	-.00013	.00001	.79598	.00000	.00000
200.460	700.480	-.00647	.08712	.00268	.00135	-.00005	.00001	.84789	.00000	.00000
200.570	800.090	-.00533	.08865	.00359	.00019	-.00048	.00002	1.02900	.00000	.00000
	GRADIENT	.00000	.00000	.00000	.00000	.00000	.00000	.00000	.00000	.00000

RUN NO. 648/ 0 GRADIENT INTERVAL = -5.00/ 5.00

DLT-X	DLT-Z	CN	CA	CLM	CY	CYN	CBL	XCP/L	YCP/L	CPB
400.470	399.640	-.06588	.10538	.03652	.00493	-.00035	.00044	.94569	.60780	.00000
400.540	498.250	-.00693	.08470	.00314	.00085	-.00013	.00004	.87458	.00000	.00000
400.480	597.780	-.00654	.08779	.00264	.00112	-.00001	.00002	.84055	.00000	.00000
400.430	699.370	-.00559	.08901	.00327	.00043	-.00055	.00003	.96750	.00000	.00000
400.530	800.030	-.00559	.08940	.00389	.00024	-.00081	.00004	1.04500	.00000	.00000
	GRADIENT	.00000	.00000	.00000	.00000	.00000	.00000	.00000	.00000	.00000

AEDC VA422(IA17) ORB AND ET SEPARATING(ET DATA) (ATR328) (24 JUL 75)

REFERENCE DATA

SREF = 2690.0000 SQ.FT. XMRP = 1360.1000 IN. XT
LREF = 1290.3000 IN. YMRP = .0000 IN. YT
BREF = 1290.3000 IN. ZMRP = 416.4000 IN. ZT
SCALE = .0100

PARAMETRIC DATA

DLT-Y = 60.000 ALPHA = 10.000
BETA = .000 DLTALF = -20.000
DLTBTA = .000 MACH = 5.930
AILRON = .000 ELEVON = .000
GRID = 23.000

RUN NO. 659/ 0 GRADIENT INTERVAL = -5.00/ 5.00

DLT-X	DLT-Z	CN	CA	CLM	CY	CYN	CBL	XCP/L	YCP/L	CPB
.472	803.420	-.13370	.09721	-.02723	.00282	.00046	.00000	.41607	.00000	.00000
.548	897.000	-.13329	.09795	-.02729	.00293	.00041	.00001	.41530	.00000	.00000
.599	999.000	-.13562	.09885	-.02809	.00270	.00041	.00000	.41364	.00000	.00000
	GRADIENT	.00000	.00000	.00000	.00000	.00000	.00000	.00000	.00000	.00000

AEDC VA422(IA17) ORB AND ET SEPARATING(ET DATA) (ATR328) (24 JUL 75)

REFERENCE DATA

SREF = 2690.0000 SQ.FT. XMRP = 1360.1000 IN. XT
LREF = 1290.3000 IN. YMRP = .0000 IN. YT
BREF = 1290.3000 IN. ZMRP = 416.4000 IN. ZT
SCALE = .0100

PARAMETRIC DATA

DLT-Y = 60.000 ALPHA = 10.000
BETA = .000 DLTALF = -20.000
DLTBTA = .000 MACH = 5.930
AILRON = .000 ELEVON = .000
GRID = 23.000

RUN NO. 658/ 0 GRADIENT INTERVAL = -5.00/ 5.00

DLT-X	DLT-Z	CN	CA	CLM	CY	CYN	CBL	XCP/L	YCP/L	CPB
200.490	801.490	-.13339	.09799	-.02671	.00260	.00042	-.00000	.41842	.00000	.00000
200.440	899.960	-.13308	.09847	-.02730	.00307	-.00014	.00001	.41500	.00000	.00000
200.610	1000.000	-.13654	.09997	-.02823	.00259	.00035	.00001	.41388	.00000	.00000
	GRADIENT	.00000	.00000	.00000	.00000	.00000	.00000	.00000	.00000	.00000

RUN NO. 657/ 0 GRADIENT INTERVAL = -5.00/ 5.00

DLT-X	DLT-Z	CN	CA	CLM	CY	CYN	CBL	XCP/L	YCP/L	CPB
400.500	800.250	-.13191	.09754	-.02641	.00329	.00050	-.00000	.41847	.00000	.00000
400.600	900.080	-.13341	.09911	-.02752	.00141	-.00010	.00002	.41422	.00000	.00000
400.530	1000.200	-.13742	.10022	-.02829	.00097	-.00040	.00004	.41454	.00000	.00000
	GRADIENT	.00000	.00000	.00000	.00000	.00000	.00000	.00000	.00000	.00000

AEDC VA422(IA17) ORB AND ET SEPARATING(ET DATA) (ATR329) (24 JUL 75)

REFERENCE DATA

SREF = 2690.0000 SQ.FT. XMRP = 1360.1000 IN. XT
LREF = 1290.3000 IN. YMRP = .0000 IN. YT
BREF = 1290.3000 IN. ZMRP = 416.4000 IN. ZT
SCALE = .0100

PARAMETRIC DATA

DLT-Y = 60.000 ALPHA = 10.000
BETA = .000 DLTALF = -10.000
DLTBTA = 3.000 MACH = 5.930
AILRON = .000 ELEVON = .000
GRID = 23.000

RUN NO. 666/ 0 GRADIENT INTERVAL = -5.00/ 5.00

DLT-X	DLT-Z	CN	CA	CLM	CY	CYN	CBL	XCP/L	YCP/L	CPB
.581	399.430	-.03498	.09481	.02035	-.03278	-.01219	.00018	.96477	.29860	.00000
.551	500.140	-.00531	.08556	.00314	-.03367	-.01173	.00025	.97210	.31494	.00000
.633	602.430	-.00695	.08875	.00274	-.03420	-.01151	.00026	.83332	.32317	.00000
.656	701.800	-.00643	.08877	.00261	-.03395	-.01142	.00026	.84212	.32338	.00000
.570	800.010	-.00562	.08982	.00300	-.03485	-.01174	.00027	.93090	.32293	.00000
	GRADIENT	.00000	.00000	.00000	.00000	.00000	.00000	.00000	.00000	.00000

AEDC VA422(IA17) ORB AND ET SEPARATING(ET DATA) (ATR329) (24 JUL 75)

REFERENCE DATA

SREF = 2690.0000 SQ.FT. XMRP = 1360.1000 IN. XT
LREF = 1290.3000 IN. YMRP = .0000 IN. YT
BREF = 1290.3000 IN. ZMRP = 416.4000 IN. ZT
SCALE = .0100

PARAMETRIC DATA

DLT-Y = 60.000 ALPHA = 10.000
BETA = .000 DLTALF = -10.000
DLTBTA = 3.000 MACH = 5.930
AILRON = .000 ELEVON = .000
GRID = 23.000

RUN NO. 667/ 0 GRADIENT INTERVAL = -5.00/ 5.00

DLT-X	DLT-Z	CN	CA	CLM	CY	CYN	CBL	XCP/L	YCP/L	CPB
200.410	400.640	-.05153	.10073	.02894	-.03131	-.01232	.00028	.95064	.28346	.00000
200.680	500.270	-.00562	.08432	.00329	-.03303	-.01161	.00025	.96727	.31287	.00000
200.530	597.680	-.00543	.08804	.00301	-.03400	-.01162	.00027	.94635	.31967	.00000
200.540	698.020	-.00515	.08836	.00313	-.03425	-.01150	.00027	.98263	.32364	.00000
200.530	799.440	-.00460	.08998	.00396	-.03463	-.01197	.00027	1.15990	.31682	.00000
	GRADIENT	.00000	.00000	.00000	.00000	.00000	.00000	.00000	.00000	.00000

RUN NO. 668/ 0 GRADIENT INTERVAL = -5.00/ 5.00

DLT-X	DLT-Z	CN	CA	CLM	CY	CYN	CBL	XCP/L	YCP/L	CPB
400.540	402.210	-.06026	.10424	.03322	-.03236	-.01227	.00026	.94346	.29357	.00000
400.510	502.210	-.00610	.08512	.00303	-.03489	-.01192	.00026	.90569	.31955	.00000
400.460	600.760	-.00632	.08834	.00280	-.03382	-.01143	.00025	.86730	.32225	.00000
400.570	700.080	-.00510	.08892	.00358	-.03401	-.01157	.00026	1.04940	.32062	.00000
400.610	800.070	-.00579	.09014	.00413	-.03608	-.01248	.00030	1.05690	.31660	.00000
	GRADIENT	.00000	.00000	.00000	.00000	.00000	.00000	.00000	.00000	.00000

ORIGINAL PAGE IS OF POOR QUALITY

AEDC VA422(IA17) ORB AND ET SEPARATING(ET DATA) (ATR330) (24 JUL 75)

REFERENCE DATA

SREF = 2690.0000 SQ.FT. XMRP = 1360.1000 IN. XT
LREF = 1290.3000 IN. YMRP = .0000 IN. YT
BREF = 1290.3000 IN. ZMRP = 416.4000 IN. ZT
SCALE = .0100

PARAMETRIC DATA

DLT-Y = 60.000 ALPHA = 10.000
BETA = .000 DLTALF = -20.000
DLTBTA = 3.000 MACH = 5.930
AILRON = .000 ELEVON = .000
GRID = 23.000

RUN NO. 660/ 0 GRADIENT INTERVAL = -5.00/ 5.00

DLT-X	DLT-Z	CN	CA	CLM	CY	CYN	CBL	XCP/L	YCP/L	CPB
.513	803.640	-.13704	.09820	-.02595	-.03545	-.00971	.00026	.42607	.36708	.00000
.437	901.240	-.13738	.10008	-.02616	-.03616	-.00984	.00026	.42529	.36815	.00000
.540	999.970	-.14015	.10077	-.02705	-.03570	-.00993	.00027	.42351	.36398	.00000
	GRADIENT	.00000	.00000	.00000	.00000	.00000	.00000	.00000	.00000	.00000

AEDC VA422(IA17) ORB AND ET SEPARATING(ET DATA) (ATR330) (24 JUL 75)

REFERENCE DATA

SREF = 2690.0000 SQ.FT. XMRP = 1360.1000 IN. XT
LREF = 1290.3000 IN. YMRP = .0000 IN. YT
BREF = 1290.3000 IN. ZMRP = 416.4000 IN. ZT
SCALE = .0100

PARAMETRIC DATA

DLT-Y = 60.000 ALPHA = 10.000
BETA = .000 DLTALF = -20.000
DLTBTA = 3.000 MACH = 5.930
AILRON = .000 ELEVON = .000
GRID = 23.000

RUN NO. 661/ 0 GRADIENT INTERVAL = -5.00/ 5.00

DLT-X	DLT-Z	CN	CA	CLM	CY	CYN	CBL	XCP/L	YCP/L	CPB
200.550	796.950	-.13446	.09894	-.02545	-.03658	-.00946	.00028	.42611	.37770	.00000
200.500	898.810	-.13501	.10012	-.02604	-.03602	-.01014	.00027	.42362	.36165	.00000
200.620	1000.100	-.13822	.10248	-.02717	-.03598	-.00975	.00028	.42100	.36893	.00000
	GRADIENT	.00000	.00000	.00000	.00000	.00000	.00000	.00000	.00000	.00000

RUN NO. 662/ 0 GRADIENT INTERVAL = -5.00/ 5.00

DLT-X	DLT-Z	CN	CA	CLM	CY	CYN	CBL	XCP/L	YCP/L	CPB
400.530	800.200	-.13482	.09871	-.02516	-.03635	-.01011	.00026	.42799	.36401	.00000
400.490	899.950	-.13653	.10076	-.02622	-.03702	-.01029	.00028	.42416	.36406	.00000
400.470	999.990	-.13808	.10172	-.02719	-.03835	-.01057	.00031	.42075	.36569	.00000
	GRADIENT	.00000	.00000	.00000	.00000	.00000	.00000	.00000	.00000	.00000

AEDC VA422(IA17) ORB AND ET SEPARATING(ET DATA) (ATR331) (24 JUL 75)

REFERENCE DATA

SREF = 2690.0000 SQ.FT. XMRP = 1360.1000 IN. XT
LREF = 1290.3000 IN. YMRP = .0000 IN. YT
BREF = 1290.3000 IN. ZMRP = 416.4000 IN. ZT
SCALE = .0100

PARAMETRIC DATA

DLT-Y = 60.000 ALPHA = 10.000
BETA = 3.000 DLTALF = -10.000
DLTBTA = .000 MACH = 5.930
AILRON = .000 ELEVON = .000
GRID = 27.000 PO = 94.000

RUN NO. 680/ 0 GRADIENT INTERVAL = -5.00/ 5.00

DLT-X	DLT-Z	CN	CA	CLM	CY	CYN	CBL	XCP/L	YCP/L	CPB
.474	399.550	-.03706	.09520	.02023	-.03590	-.01169	.00038	.93983	.33091	.00000
.585	500.510	-.00728	.08603	.00308	-.03560	-.01216	.00029	.85370	.31971	.00000
.630	599.110	-.00687	.08896	.00298	-.03626	-.01229	.00029	.86120	.32156	.00000
.583	698.260	-.00718	.08904	.00284	-.03597	-.01175	.00029	.83465	.33019	.00000
.702	798.240	-.00751	.08946	.00267	-.03725	-.01216	.00031	.80724	.33032	.00000
	GRADIENT	.00000	.00000	.00000	.00000	.00000	.00000	.00000	.00000	.00000

AEDC VA422(IA17) ORB AND ET SEPARATING(ET DATA) (ATR331) (24 JUL 75)

REFERENCE DATA

SREF = 2690.0000 SQ.FT. XMRP = 1360.1000 IN. XT
LREF = 1290.3000 IN. YMRP = .0000 IN. YT
BREF = 1290.3000 IN. ZMRP = 416.4000 IN. ZT
SCALE = .0100

PARAMETRIC DATA

DLT-Y = 60.000 ALPHA = 10.000
BETA = 3.000 DLTALF = -10.000
DLTBTA = .000 MACH = 5.930
AILRON = .000 ELEVON = .000
GRID = 27.000 PO = 94.000

RUN NO. 679/ 0 GRADIENT INTERVAL = -5.00/ 5.00

DLT-X	DLT-Z	CN	CA	CLM	CY	CYN	CBL	XCP/L	YCP/L	CPB
200.540	400.720	-.04801	.10055	.02635	-.03646	-.01212	.00045	.94174	.32601	.00000
200.670	501.840	-.00717	.08600	.00270	-.03692	-.01266	.00030	.82185	.31883	.00000
200.630	601.800	-.00763	.08915	.00266	-.03699	-.01244	.00029	.80206	.32334	.00000
200.550	700.400	-.00794	.08914	.00244	-.03749	-.01219	.00029	.77293	.33119	.00000
200.590	799.960	-.00814	.08915	.00272	-.03670	-.01231	.00030	.79167	.32409	.00000
	GRADIENT	.00000	.00000	.00000	.00000	.00000	.00000	.00000	.00000	.00000

RUN NO. 678/ 0 GRADIENT INTERVAL = -5.00/ 5.00

DLT-X	DLT-Z	CN	CA	CLM	CY	CYN	CBL	XCP/L	YCP/L	CPB
400.520	399.380	-.06537	.10929	.03612	-.03410	-.01217	.00047	.94438	.30899	.00000
400.550	498.350	-.00802	.08594	.00294	-.03482	-.01206	.00027	.81458	.31641	.00000
400.490	597.960	-.00750	.08864	.00273	-.03575	-.01198	.00030	.81223	.32423	.00000
400.610	699.370	-.00795	.08933	.00271	-.03645	-.01213	.00028	.79623	.32581	.00000
400.510	800.050	-.00779	.08934	.00296	-.03779	-.01282	.00031	.82373	.32128	.00000
	GRADIENT	.00000	.00000	.00000	.00000	.00000	.00000	.00000	.00000	.00000

AEDC VA422(IA17) ORB AND ET SEPARATING(ET DATA) (ATR332) (24 JUL 75)

REFERENCE DATA

SREF = 2690.0000 SQ.FT. XMRP = 1360.1000 IN. XT
LREF = 1290.3000 IN. YMRP = .0000 IN. YT
BREF = 1290.3000 IN. ZMRP = 416.4000 IN. ZT
SCALE = .0100

PARAMETRIC DATA

DLT-Y = 60.000 ALPHA = 10.000
BETA = 3.000 DLTALF = -20.000
DLTBTA = .000 MACH = 5.930
AILRON = .000 ELEVON = .000
GRID = 27.000 PO = 94.000

RUN NO. 689/ 0 GRADIENT INTERVAL = -5.00/ 5.00

DLT-X	DLT-Z	CN	CA	CLM	CY	CYN	CBL	XCP/L	YCP/L	CPB
.544	803.110	-.13874	.09914	-.02610	-.03781	-.01005	.00030	.42691	.37268	.00000
.470	897.150	-.13672	.10023	-.02621	-.03912	-.01057	.00031	.42444	.36962	.00000
.574	998.950	-.13926	.09977	-.02620	-.03894	-.01059	.00031	.42691	.36830	.00000
	GRADIENT	.00000	.00000	.00000	.00000	.00000	.00000	.00000	.00000	.00000

AEDC VA422(IA17) ORB AND ET SEPARATING(ET DATA) (ATR332) (24 JUL 75)

REFERENCE DATA

SREF = 2690.0000 SQ.FT. XMRP = 1360.1000 IN. XT
LREF = 1290.3000 IN. YMRP = .0000 IN. YT
BREF = 1290.3000 IN. ZMRP = 416.4000 IN. ZT
SCALE = .0100

PARAMETRIC DATA

DLT-Y = 60.000 ALPHA = 10.000
BETA = 3.000 DLTALF = -20.000
DLTBTA = .000 MACH = 5.930
AILRON = .000 ELEVON = .000
GRID = 27.000 PO = 94.000

RUN NO. 688/ 0 GRADIENT INTERVAL = -5.00/ 5.00

DLT-X	DLT-Z	CN	CA	CLM	CY	CYN	CBL	XCP/L	YCP/L	CPB
200.560	801.460	-.13756	.09928	-.02606	-.03956	-.01050	.00031	.42599	.37291	.00000
200.540	900.050	-.13772	.09984	-.02609	-.04109	-.01087	.00032	.42597	.37346	.00000
200.650	1000.000	-.13916	.10001	-.02636	-.04096	-.01098	.00033	.42600	.37107	.00000
	GRADIENT	.00000	.00000	.00000	.00000	.00000	.00000	.00000	.00000	.00000

RUN NO. 687/ 0 GRADIENT INTERVAL = -5.00/ 5.00

DLT-X	DLT-Z	CN	CA	CLM	CY	CYN	CBL	XCP/L	YCP/L	CPB
400.540	800.190	-.13710	.09869	-.02585	-.03904	-.01028	.00031	.42664	.37441	.00000
400.550	900.060	-.13884	.09976	-.02612	-.04059	-.01079	.00033	.42690	.37263	.00000
400.600	1000.100	-.13941	.10054	-.02649	-.04143	-.01135	.00033	.42558	.36694	.00000
	GRADIENT	.00000	.00000	.00000	.00000	.00000	.00000	.00000	.00000	.00000

AEDC VA422(IA17) ORB AND ET SEPARATING(ET DATA) (ATR333) (24 JUL 75)

REFERENCE DATA

SREF = 2690.0000 SQ.FT. XMRP = 1360.1000 IN. XT
LREF = 1290.3000 IN. YMRP = .0000 IN. YT
BREF = 1290.3000 IN. ZMRP = 416.4000 IN. ZT
SCALE = .0100

PARAMETRIC DATA

DLT-Y = 60.000 ALPHA = 10.000
BETA = 3.000 DLTALF = -10.000
DLTBTA = 3.000 MACH = 5.930
AILRON = .000 ELEVON = .000
GRID = 27.000 PO = 94.000

RUN NO. 696/ 0 GRADIENT INTERVAL = -5.00/ 5.00

DLT-X	DLT-Z	CN	CA	CLM	CY	CYN	CBL	XCP/L	YCP/L	CPB
.471	399.500	-.03282	.09819	.01782	-.06917	-.02331	.00029	.93769	.32292	.00000
.684	500.720	-.00547	.08725	.00215	-.07340	-.02225	.00056	.83336	.34652	.00000
.562	602.260	-.00615	.09094	.00195	-.07325	-.02189	.00056	.78019	.34959	.00000
.596	701.760	-.00657	.09077	.00167	-.07379	-.02171	.00055	.73592	.35282	.00000
.670	799.960	-.00757	.09140	.00178	-.07476	-.02209	.00056	.72120	.35193	.00000
	GRADIENT	.00000	.00000	.00000	.00000	.00000	.00000	.00000	.00000	.00000

AEDC VA422(IA17) ORB AND ET SEPARATING(ET DATA) (ATR333) (24 JUL 75)

REFERENCE DATA

SREF = 2690.0000 SQ.FT. XMRP = 1360.1000 IN. XT
LREF = 1290.3000 IN. YMRP = .0000 IN. YT
BREF = 1290.3000 IN. ZMRP = 416.4000 IN. ZT
SCALE = .0100

PARAMETRIC DATA

DLT-Y = 60.000 ALPHA = 10.000
BETA = 3.000 DLTALF = -10.000
DLTBTA = 3.000 MACH = 5.930
AILRON = .000 ELEVON = .000
GRID = 27.000 PO = 94.000

RUN NO. 697/ 0 GRADIENT INTERVAL = -5.00/ 5.00

DLT-X	DLT-Z	CN	CA	CLM	CY	CYN	CBL	XCP/L	YCP/L	CPB
200.540	400.460	-.04818	.10174	.02722	-.07007	-.02308	.00029	.95307	.32820	.00000
200.630	499.890	-.00546	.08587	.00221	-.07210	-.02223	.00054	.84126	.34294	.00000
200.590	597.730	-.00534	.09060	.00228	-.07336	-.02197	.00056	.85708	.34910	.00000
200.670	698.060	-.00690	.09076	.00193	-.07384	-.02191	.00056	.75359	.35104	.00000
200.620	799.380	-.00598	.09060	.00226	-.07467	-.02232	.00057	.82274	.34950	.00000
	GRADIENT	.00000	.00000	.00000	.00000	.00000	.00000	.00000	.00000	.00000

RUN NO. 698/ 0 GRADIENT INTERVAL = -5.00/ 5.00

DLT-X	DLT-Z	CN	CA	CLM	CY	CYN	CBL	XCP/L	YCP/L	CPB
400.610	402.040	-.05893	.10735	.03347	-.06951	-.02305	.00031	.95520	.32665	.00000
400.570	502.190	-.00589	.08675	.00181	-.07242	-.02234	.00054	.77325	.34189	.00000
400.570	600.660	-.00617	.09004	.00196	-.07385	-.02204	.00056	.78003	.34986	.00000
400.600	699.990	-.00662	.09096	.00207	-.07386	-.02197	.00056	.77678	.35058	.00000
400.720	800.050	-.00682	.09063	.00244	-.07527	-.02298	.00057	.80857	.34503	.00000
	GRADIENT	.00000	.00000	.00000	.00000	.00000	.00000	.00000	.00000	.00000

AEDC VA422(IA17) ORB AND ET SEPARATING(ET DATA) (ATR334) (24 JUL 75)

REFERENCE DATA

SREF = 2690.0000 SQ.FT. XMRP = 1360.1000 IN. XT
LREF = 1290.3000 IN. YMRP = .0000 IN. YT
BREF = 1290.3000 IN. ZMRP = 416.4000 IN. ZT
SCALE = .0100

PARAMETRIC DATA

DLT-Y = 60.000 ALPHA = 10.000
BETA = 3.000 DLTALF = -20.000
DLTBTA = 3.000 MACH = 5.930
AILRON = .000 ELEVON = .000
GRID = 27.000 PO = 94.000

RUN NO. 690/ 0 GRADIENT INTERVAL = -5.00/ 5.00

DLT-X	DLT-Z	CN	CA	CLM	CY	CYN	CBL	XCP/L	YCP/L	CPB
.548	803.560	-.14168	.10002	-.02548	-.07999	-.02037	.00054	.43270	.38048	.00000
.508	901.310	-.14121	.10093	-.02557	-.08139	-.02024	.00055	.43184	.38457	.00000
.581	999.910	-.14233	.10187	-.02570	-.08177	-.02058	.00058	.43219	.38255	.00000
	GRADIENT	.00000	.00000	.00000	.00000	.00000	.00000	.00000	.00000	.00000

AEDC VA422(IA17) ORB AND ET SEPARATING(ET DATA) (ATR334) (24 JUL 75)

REFERENCE DATA

SREF = 2690.0000 SQ.FT. XMRP = 1360.1000 IN. XT
LREF = 1290.3000 IN. YMRP = .0000 IN. YT
BREF = 1290.3000 IN. ZMRP = 416.4000 IN. ZT
SCALE = .0100

PARAMETRIC DATA

DLT-Y = 60.000 ALPHA = 13.000
BETA = 3.000 DLTALF = -20.000
DLTBTA = 3.000 MACH = 5.930
AILRON = .000 ELEVON = .000
GRID = 27.000 PO = 94.000

RUN NO. 691/ 0 GRADIENT INTERVAL = -5.00/ 5.00

DLT-X	DLT-Z	CN	CA	CLM	CY	CYN	CBL	XCP/L	YCP/L	CPB
200.520	797.050	-.14027	.10052	-.02525	-.08080	-.02027	.00054	.43260	.38312	.00000
200.540	898.680	-.13905	.10087	-.02536	-.08131	-.02029	.00056	.43092	.38398	.00000
200.580	1000.100	-.14201	.10118	-.02568	-.08266	-.02084	.00058	.43201	.38219	.00000
	GRADIENT	.00000	.00000	.00000	.00000	.00000	.00000	.00000	.00000	.00000

RUN NO. 692/ 0 GRADIENT INTERVAL = -5.00/ 5.00

DLT-X	DLT-Z	CN	CA	CLM	CY	CYN	CBL	XCP/L	YCP/L	CPB
400.520	800.260	-.14061	.10018	-.02510	-.08032	-.02015	.00054	.43364	.38306	.00000
400.580	899.960	-.14035	.10094	-.02546	-.08308	-.02110	.00057	.43163	.38094	.00000
400.570	1000.100	-.14200	.10159	-.02588	-.08456	-.02168	.00060	.43101	.37921	.00000
	GRADIENT	.00000	.00000	.00000	.00000	.00000	.00000	.00000	.00000	.00000

AEDC VA422(IA17) ORB AND ET SEPARATING(ET DATA) (ATR335) (24 JUL 75)

REFERENCE DATA

SREF = 2690.0000 SQ.FT. XMRP = 1360.1000 IN. XT
LREF = 1290.3000 IN. YMRP = .0000 IN. YT
BREF = 1290.3000 IN. ZMRP = 416.4000 IN. ZT
SCALE = .0100

PARAMETRIC DATA

DLT-Y = 60.000 ALPHA = .000
BETA = .000 DLTALF = .000
DLTBTA = .000 MACH = 7.980
AILRON = .000 ELEVON = .000
GRID = 16.000 PO = 420.000

RUN NO. 720/ 0 GRADIENT INTERVAL = -5.00/ 5.00

DLT-X	DLT-Z	CN	CA	CLM	CY	CYN	CBL	XCP/L	YCP/L	CPB
.442	20.046	-.03051	.08324	.00438	-.00130	.00014	.00019	.65862	.00000	.00000
.461	101.970	-.02841	.08508	.00692	.00067	.00044	.00011	.72847	.00000	.00000
.409	200.450	-.01195	.08248	.00591	.00169	.00042	.00018	.90367	.00000	.00000
.548	299.030	-.00414	.07982	.00107	.00012	-.00002	.00011	.73962	.00000	.00000
.541	397.870	-.00404	.08067	.00116	.00077	.00007	.00010	.75952	.00000	.00000
.455	499.650	-.00408	.08064	.00117	.00008	.00003	.00011	.75848	.00000	.00000
	GRADIENT	.00000	.00000	.00000	.00000	.00000	.00000	.00000	.00000	.00000

ORIGINAL PAGE IS OF POOR QUALITY

AEDC VA422(IA17) ORB AND ET SEPARATING(ET DATA) (ATR335) (24 JUL 75)

REFERENCE DATA

SREF = 2690.0000 SQ.FT. XMRP = 1360.1000 IN. XT
LREF = 1290.3000 IN. YMRP = .0000 IN. YT
BREF = 1290.3000 IN. ZMRP = 416.4000 IN. ZT
SCALE = .0100

PARAMETRIC DATA

DLT-Y = 60.000 ALPHA = .000
BETA = .000 DLTALF = .000
DLTBTA = .000 MACH = 7.980
AILRON = .000 ELEVON = .000
GRID = 16.000 PO = 420.000

RUN NO. 719/ 0 GRADIENT INTERVAL = -5.00/ 5.00

DLT-X	DLT-Z	CN	CA	CLM	CY	CYN	CBL	XCP/L	YCP/L	CPB
200.540	20.610	-.03703	.08436	-.00274	.00012	-.00119	.00010	.50667	.00000	.00000
200.540	100.870	-.03111	.08638	.00877	-.00099	.00055	.00007	.75529	.00000	.00000
200.550	202.290	-.01482	.08376	.00661	.00062	.00014	.00012	.86991	.00000	.00000
200.460	301.510	-.00550	.08011	.00129	-.00052	-.00019	.00011	.72220	.00000	.00000
200.450	400.200	-.00479	.08044	.00091	-.00014	.00002	.00011	.69128	.00000	.00000
200.480	500.070	-.00457	.08064	.00095	.00090	.00006	.00010	.70334	.00000	.00000
	GRADIENT	.00000	.00000	.00000	.00000	.00000	.00000	.00000	.00000	.00000

AEDC VA422(IA17) ORB AND ET SEPARATING(ET DATA) (ATR336) (24 JUL 75)

REFERENCE DATA

SREF = 2690.0000 SQ.FT. XMRP = 1360.1000 IN. XT
LREF = 1290.3000 IN. YMRP = .0000 IN. YT
BREF = 1290.3000 IN. ZMRP = 416.4000 IN. ZT
SCALE = .0100

PARAMETRIC DATA

DLT-Y = 60.000 ALPHA = .000
BETA = .000 DLTALF = -10.000
DLTBTA = .000 MACH = 7.980
AILRON = .000 ELEVON = .000
GRID = 16.000 PO = 420.000

RUN NO. 728/ 0 GRADIENT INTERVAL = -5.00/ 5.00

DLT-X	DLT-Z	CN	CA	CLM	CY	CYN	CBL	XCP/L	YCP/L	CPB
.505	402.640	-.14737	.10060	-.01628	.00427	.00020	.00037	.48114	.00000	.00000
.520	496.330	-.12521	.08870	-.02912	.00249	.00063	.00015	.39587	.00000	.00000
.590	598.990	-.12419	.08927	-.02983	.00387	.00106	.00010	.39054	.00000	.00000
.549	750.090	-.12583	.09022	-.03015	.00280	.00059	.00011	.39096	.00000	.00000
.573	800.200	-.12651	.08959	-.03031	.00262	.00051	.00011	.39098	.00000	.00000
	GRADIENT	.00000	.00000	.00000	.00000	.00000	.00000	.00000	.00000	.00000

RUN NO. 727/ 0 GRADIENT INTERVAL = -5.00/ 5.00

DLT-X	DLT-Z	CN	CA	CLM	CY	CYN	CBL	XCP/L	YCP/L	CPB
200.390	402.620	-.15677	.10558	-.01062	.00319	.00039	.00031	.51102	.00000	.00000
200.430	500.350	-.13168	.09075	-.02648	.00313	.00099	.00020	.41784	.00000	.00000
200.440	600.170	-.12557	.08998	-.02994	.00346	.00100	.00010	.39179	.00000	.00000
200.450	750.050	-.12616	.09039	-.03032	.00242	.00052	.00011	.39046	.00000	.00000
200.450	800.160	-.12658	.09010	-.03042	.00232	.00038	.00011	.39046	.00000	.00000
	GRADIENT	.00000	.00000	.00000	.00000	.00000	.00000	.00000	.00000	.00000

AEDC VA422(IA17) ORB AND ET SEPARATING(ET DATA) (ATR336) (24 JUL 75)

REFERENCE DATA

SREF = 2690.0000 SQ.FT. XMRP = 1360.1000 IN. XT
LREF = 1290.3000 IN. YMRP = .0000 IN. YT
BREF = 1290.3000 IN. ZMRP = 416.4000 IN. ZT
SCALE = .0100

PARAMETRIC DATA

DLT-Y = 60.000 ALPHA = .000
BETA = .000 DLTALF = -10.000
DLTBTA = .000 MACH = 7.980
AILRON = .000 ELEVON = .000
GRID = 16.000 PO = 420.000

RUN NO. 726/ 0 GRADIENT INTERVAL = -5.00/ 5.00

DLT-X	DLT-Z	CN	CA	CLM	CY	CYN	CBL	XCP/L	YCP/L	CPB
400.470	400.190	-.15510	.10085	-.01397	.00310	.00081	.00021	.49543	.00000	.00000
400.490	498.990	-.13964	.09592	-.02156	.00385	.00020	.00030	.45045	.00000	.00000
400.490	600.260	-.12605	.08886	-.02971	.00276	.00075	.00010	.39370	.00000	.00000
400.450	750.210	-.12659	.08981	-.03019	.00148	.00035	.00012	.39173	.00000	.00000
400.460	800.170	-.12658	.08956	-.03027	.00276	.00056	.00011	.39127	.00000	.00000
	GRADIENT	.00000	.00000	.00000	.00000	.00000	.00000	.00000	.00000	.00000

AEDC VA422(IA17) ORB AND ET SEPARATING(ET DATA) (ATR338) (24 JUL 75)

REFERENCE DATA

SREF = 2690.0000 SQ.FT. XMRP = 1360.1000 IN. XT
LREF = 1290.3000 IN. YMRP = .0000 IN. YT
BREF = 1290.3000 IN. ZMRP = 416.4000 IN. ZT
SCALE = .0100

PARAMETRIC DATA

DLT-Y = 60.000 ALPHA = .000
BETA = .000 DLTALF = -20.000
DLTBTA = .000 MACH = 7.980
AILRON = .000 ELEVON = .000
GRID = 16.000 PO = 420.000

RUN NO. 737/ 0 GRADIENT INTERVAL = -5.00/ 5.00

DLT-X	DLT-Z	CN	CA	CLM	CY	CYN	CBL	XCP/L	YCP/L	CPB
.443	799.980	-.32626	.12037	-.03621	.00768	.00014	.00037	.48081	.54564	.00000
.490	898.400	-.32669	.11929	-.03641	.00678	-.00013	.00036	.48047	.57204	.00000
.419	1000.200	-.32636	.11949	-.03600	.00750	.00007	.00037	.48128	.55199	.00000
	GRADIENT	.00000	.00000	.00000	.00000	.00000	.00000	.00000	.00000	.00000

RUN NO. 735/ 0 GRADIENT INTERVAL = -5.00/ 5.00

DLT-X	DLT-Z	CN	CA	CLM	CY	CYN	CBL	XCP/L	YCP/L	CPB
200.460	751.530	-.34298	.12084	-.02679	.00623	.00084	.00043	.50377	.46371	.00000
200.340	799.340	-.32856	.11927	-.03509	.00681	.00010	.00042	.48374	.54813	.00000
200.310	900.290	-.32653	.11951	-.03613	.00737	.00013	.00036	.48103	.54644	.00000
200.320	1000.200	-.32730	.11955	-.03564	.00730	.00002	.00038	.48227	.55609	.00000
	GRADIENT	.00000	.00000	.00000	.00000	.00000	.00000	.00000	.00000	.00000

AEDC VA422(IA17) ORB AND ET SEPARATING(ET DATA) (ATR338) (24 JUL 75)

REFERENCE DATA

SREF = 2690.0000 SQ.FT. XMRP = 1360.1000 IN. XT
LREF = 1290.3000 IN. YMRP = .0000 IN. YT
BREF = 1290.3000 IN. ZMRP = 416.4000 IN. ZT
SCALE = .0100

PARAMETRIC DATA

DLT-Y = 60.000 ALPHA = .000
BETA = .000 DLTALF = -20.000
DLTBTA = .000 MACH = 7.980
AILRON = .000 ELEVON = .000
GRID = 16.000 PO = 420.000

RUN NO. 734/ 0 GRADIENT INTERVAL = -5.00/ 5.00

DLT-X	DLT-Z	CN	CA	CLM	CY	CYN	CBL	XCP/L	YCP/L	CPB
400.280	750.230	-.35221	.12967	-.01999	.00758	-.00042	.00056	.51869	.59707	.00000
400.390	800.300	-.33610	.12005	-.02992	.00632	.00086	.00034	.49615	.46295	.00000
400.430	900.320	-.32568	.11969	-.03584	.00824	.00019	.00037	.48145	.54190	.00000
400.380	1000.200	-.32600	.12047	-.03540	.00827	.00029	.00037	.48248	.53353	.00000
	GRADIENT	.00000	.00000	.00000	.00000	.00000	.00000	.00000	.00000	.00000

AEDC VA422(IA17) ORB AND ET SEPARATING(ET DATA) (ATR339) (24 JUL 75)

REFERENCE DATA

SREF = 2690.0000 SQ.FT. XMRP = 1360.1000 IN. XT
LREF = 1290.3000 IN. YMRP = .0000 IN. YT
BREF = 1290.3000 IN. ZMRP = 416.4000 IN. ZT
SCALE = .0100

PARAMETRIC DATA

DLT-Y = 60.000 ALPHA = .000
BETA = .000 DLTALF = .000
DLTBTA = 3.000 MACH = 7.980
AILRON = .000 ELEVON = .000
GRID = 16.000 PO = 420.000

RUN NO. 744/ 0 GRADIENT INTERVAL = -5.00/ 5.00

DLT-X	DLT-Z	CN	CA	CLM	CY	CYN	CBL	XCP/L	YCP/L	CPB
.415	18.288	-.03288	.08223	.00415	-.03355	-.01010	.00052	.64665	.34791	.00000
.505	99.701	-.03029	.08254	.00730	-.03377	-.01095	.00047	.72665	.33187	.00000
.546	201.460	-.01184	.08132	.00492	-.03138	-.01158	.00023	.84854	.30059	.00000
.508	302.390	-.00640	.07973	.00096	-.03156	-.01178	.00036	.66331	.29759	.00000
.525	400.500	-.00633	.08008	.00105	-.03271	-.01175	.00037	.67424	.30744	.00000
.501	500.160	-.00697	.08022	.00115	-.03199	-.01188	.00036	.67366	.29896	.00000
	GRADIENT	.00000	.00000	.00000	.00000	.00000	.00000	.00000	.00000	.00000

RUN NO. 745/ 0 GRADIENT INTERVAL = -5.00/ 5.00

DLT-X	DLT-Z	CN	CA	CLM	CY	CYN	CBL	XCP/L	YCP/L	CPB
200.480	23.778	-.04368	.08353	-.00241	-.03690	-.01158	.00045	.51987	.33905	.00000
200.470	99.157	-.03326	.08438	.00873	-.03459	-.01044	.00041	.74174	.34747	.00000
200.470	199.500	-.01703	.08250	.00769	-.03231	-.01193	.00030	.87385	.30042	.00000
200.490	297.770	-.00589	.07927	.00169	-.03215	-.01181	.00034	.75915	.30170	.00000
200.450	398.690	-.00641	.07963	.00117	-.03264	-.01219	.00037	.68574	.29733	.00000
200.640	499.990	-.00574	.08018	.00113	-.03319	-.01191	.00038	.69610	.30759	.00000
	GRADIENT	.00000	.00000	.00000	.00000	.00000	.00000	.00000	.00000	.00000

AEDC VA422(IA17) ORB AND ET SEPARATING(ET DATA) (ATR340) (24 JUL 75)

REFERENCE DATA

SREF = 2890.0000 SQ.FT. XMRP = 1360.1000 IN. XT
LREF = 1290.3000 IN. YMRP = .0000 IN. YT
BREF = 1290.3000 IN. ZMRP = 416.4000 IN. ZT
SCALE = .0100

PARAMETRIC DATA

DLT-Y = 60.000 ALPHA = .000
BETA = .000 DLTALF = -10.000
DLTBTA = 3.000 MACH = 7.980
AILRON = .000 ELEVON = .000
GRID = 16.000 PO = 420.000

RUN NO. 741/ 0 GRADIENT INTERVAL = -5.00/ 5.00

DLT-X	DLT-Z	CN	CA	CLM	CY	CYN	CBL	XCP/L	YCP/L	CPB
.495	404.260	-.14961	.10295	-.01569	-.03320	-.00999	.00044	.48506	.34801	.00000
.460	501.120	-.12915	.09144	-.02895	-.03366	-.00979	.00034	.40172	.35507	.00000
.484	600.210	-.12967	.09198	-.02936	-.03487	-.00992	.00037	.40014	.35962	.00000
.563	750.020	-.13144	.09246	-.02962	-.03438	-.00989	.00036	.40091	.35736	.00000
-.081	802.330	-.13212	.09350	-.02985	-.03628	-.01039	.00036	.40052	.35816	.00000
	GRADIENT	.00000	.00000	.00000	.00000	.00000	.00000	.00000	.00000	.00000

RUN NO. 742/ 0 GRADIENT INTERVAL = -5.00/ 5.00

DLT-X	DLT-Z	CN	CA	CLM	CY	CYN	CBL	XCP/L	YCP/L	CPB
200.500	398.030	-.16102	.10622	-.00876	-.03457	-.00961	.00048	.52034	.36404	.00000
200.500	497.610	-.13479	.09356	-.02422	-.03475	-.00988	.00028	.43283	.35965	.00000
200.440	599.960	-.12882	.09107	-.02896	-.03364	-.00956	.00035	.40129	.35972	.00000
200.480	750.090	-.12915	.09194	-.02932	-.03490	-.01012	.00036	.39972	.35570	.00000
200.470	800.210	-.13045	.09204	-.02937	-.03368	-.00989	.00036	.40106	.35309	.00000
	GRADIENT	.00000	.00000	.00000	.00000	.00000	.00000	.00000	.00000	.00000

RUN NO. 743/ 0 GRADIENT INTERVAL = -5.00/ 5.00

DLT-X	DLT-Z	CN	CA	CLM	CY	CYN	CBL	XCP/L	YCP/L	CPB
400.490	401.620	-.16223	.10363	-.01141	-.03568	-.00894	.00040	.50918	.38332	.00000
400.360	500.000	-.14241	.09985	-.01963	-.03447	-.00982	.00038	.46205	.35930	.00000
400.400	600.030	-.12795	.09089	-.02877	-.03481	-.00982	.00037	.40124	.36130	.00000
400.410	750.070	-.12968	.09181	-.02921	-.03450	-.00985	.00036	.40099	.35887	.00000
400.450	800.110	-.13058	.09153	-.02928	-.03430	-.00995	.00035	.40167	.35576	.00000
	GRADIENT	.00000	.00000	.00000	.00000	.00000	.00000	.00000	.00000	.00000

AEDC VA422(IA17) ORB AND ET SEPARATING(ET DATA) (ATR342) (24 JUL 75)

REFERENCE DATA

SREF = 2690.0000 SQ.FT. XMRP = 1380.1000 IN. XT
LREF = 1290.3000 IN. YMRP = .0000 IN. YT
BREF = 1290.3000 IN. ZMRP = 416.4000 IN. ZT
SCALE = .0100

PARAMETRIC DATA

DLT-Y = 60.000 ALPHA = .000
BETA = .000 DLTALF = -20.000
DLTBTA = 3.000 MACH = 7.980
AILRON = .000 ELEVON = .000
GRID = 16.000 PO = 420.000

RUN NO. 740/ 0 GRADIENT INTERVAL = -5.00/ 5.00

DLT-X	DLT-Z	CN	CA	CLM	CY	CYN	CBL	XCP/L	YCP/L	CPB
.450	802.410	-.33391	.12132	-.03431	-.04285	-.00699	.00034	.48656	.44435	.00000
.462	900.390	-.33379	.12159	-.03426	-.04295	-.00688	.00035	.48664	.44636	.00000
.493	1000.300	-.33522	.12163	-.03352	-.04297	-.00698	.00038	.48848	.44480	.00000
	GRADIENT	.00000	.00000	.00000	.00000	.00000	.00000	.00000	.00000	.00000

RUN NO. 738/ 0 GRADIENT INTERVAL = -5.00/ 5.00

DLT-X	DLT-Z	CN	CA	CLM	CY	CYN	CBL	XCP/L	YCP/L	CPB
200.280	751.370	-.34789	.12195	-.02497	-.04228	-.00724	.00025	.50820	.43865	.00000
200.320	800.520	-.33403	.12117	-.03359	-.04357	-.00710	.00032	.48809	.44452	.00000
200.350	900.410	-.33275	.12207	-.03400	-.04295	-.00698	.00034	.48696	.44473	.00000
200.390	1000.300	-.33446	.12195	-.03345	-.04251	-.00688	.00034	.48848	.44533	.00000
	GRADIENT	.00000	.00000	.00000	.00000	.00000	.00000	.00000	.00000	.00000

RUN NO. 739/ 0 GRADIENT INTERVAL = -5.00/ 5.00

DLT-X	DLT-Z	CN	CA	CLM	CY	CYN	CBL	XCP/L	YCP/L	CPB
400.290	748.880	-.35693	.13203	-.01887	-.04168	-.00748	.00035	.52141	.43300	.00000
400.480	800.500	-.34331	.12030	-.02806	-.04225	-.00681	.00032	.50125	.44576	.00000
400.330	900.400	-.33269	.12108	-.03386	-.04293	-.00685	.00034	.48724	.44681	.00000
400.450	1000.300	-.33337	.12169	-.03358	-.04244	-.00668	.00033	.48796	.44829	.00000
	GRADIENT	.00000	.00000	.00000	.00000	.00000	.00000	.00000	.00000	.00000

ORIGINAL PAGE IS OF POOR QUALITY

AEDC VA422(IA17) ORB AND ET SEPARATING(ET DATA) (ATR343) (24 JUL 75)

REFERENCE DATA

SREF =	2890.0000 SQ.FT.	XMRP =	1380.1000 IN. XT
LREF =	1290.3000 IN.	YMRP =	.0000 IN. YT
BREF =	1290.3000 IN.	ZMRP =	416.4000 IN. ZT
SCALE =	.0100		

PARAMETRIC DATA

DLT-Y =	60.000	ALPHA =	.000
BETA =	.000	DLTALF =	.000
DLTBTA =	.000	MACH =	7.980
AILRON =	.000	ELEVON =	.000
GRID =	16.000	PO =	300.000

RUN NO. 871/ 0 GRADIENT INTERVAL = -5.00/ 5.00

DLT-X	DLT-Z	CN	CA	CLM	CY	CYN	CBL	XCP/L	YCP/L	CPB
.618	17.679	-.03560	.08589	.00674	-.00257	-.00027	.00009	.69069	.00000	.00000
.552	101.350	-.02989	.08502	.00771	-.00238	.00012	.00008	.73856	.00000	.00000
.581	200.190	-.01130	.08036	.00415	-.00132	-.00022	.00016	.81475	.00000	.00000
.601	299.260	-.00593	.07904	.00068	-.00196	-.00058	.00009	.63812	.00000	.00000
.486	398.540	-.00518	.07928	.00068	-.00216	-.00071	.00009	.65055	.00000	.00000
.486	499.920	-.00561	.07981	.00071	-.00224	-.00068	.00009	.64672	.00000	.00000
	GRADIENT	.00000	.00000	.00000	.00000	.00000	.00000	.00000	.00000	.00000

RUN NO. 870/ 0 GRADIENT INTERVAL = -5.00/ 5.00

DLT-X	DLT-Z	CN	CA	CLM	CY	CYN	CBL	XCP/L	YCP/L	CPB
200.430	20.645	-.04082	.08545	-.00097	-.00251	-.00154	.00022	.54181	.00000	.00000
200.530	100.610	-.03268	.08688	.00979	-.00402	.00043	.00003	.76762	.00000	.00000
200.460	201.590	-.01430	.08204	.00570	-.00125	-.00049	.00015	.83691	.00000	.00000
200.410	301.040	-.00567	.07904	.00082	-.00215	-.00064	.00009	.65996	.00000	.00000
200.600	400.080	-.00522	.08053	.00052	-.00234	-.00073	.00009	.62800	.00000	.00000
200.620	500.080	-.00614	.07938	.00055	-.00168	-.00063	.00008	.62089	.00000	.00000
	GRADIENT	.00000	.00000	.00000	.00000	.00000	.00000	.00000	.00000	.00000

AEDC VA422(IA17) ORB AND ET SEPARATING(ET DATA) (ATR344) (24 JUL 75)

REFERENCE DATA

SREF = 2690.0000 SQ.FT. XMRP = 1360.1000 IN. XT
LREF = 1290.3000 IN. YMRP = .0000 IN. YT
BREF = 1290.3000 IN. ZMRP = 416.4000 IN. ZT
SCALE = .0100

PARAMETRIC DATA

DLT-Y = 60.000 ALPHA = .000
BETA = .000 DLTALF = -10.000
DLTBTA = .000 MACH = 7.980
AILRON = .000 ELEVON = .000
GRID = 16.000 PO = 300.000

RUN NO. 879/ 0 GRADIENT INTERVAL = -5.00/ 5.00

DLT-X	DLT-Z	CN	CA	CLM	CY	CYN	CBL	XCP/L	YCP/L	CPB
.501	401.970	-.14702	.10029	-.01664	.00155	-.00010	.00038	.47929	.00000	.00000
.492	497.410	-.12672	.08805	-.02957	.00018	-.00002	.00014	.39532	.00000	.00000
.540	599.300	-.12641	.08923	-.03005	-.00019	-.00010	.00010	.39228	.00000	.00000
.506	750.110	-.12781	.08936	-.03050	-.00069	-.00031	.00011	.39159	.00000	.00000
.550	800.180	-.12762	.08898	-.03062	.00039	-.00005	.00011	.39070	.00000	.00000
	GRADIENT	.00000	.00000	.00000	.00000	.00000	.00000	.00000	.00000	.00000

RUN NO. 878/ 0 GRADIENT INTERVAL = -5.00/ 5.00

DLT-X	DLT-Z	CN	CA	CLM	CY	CYN	CBL	XCP/L	YCP/L	CPB
200.390	401.890	-.15746	.10637	-.01081	-.00093	-.00034	.00028	.51036	.00000	.00000
200.420	500.240	-.13205	.09063	-.02699	-.00018	.00025	.00022	.41552	.00000	.00000
200.430	600.110	-.12661	.08868	-.03001	-.00057	-.00016	.00012	.39275	.00000	.00000
200.430	750.030	-.12739	.08907	-.03050	-.00030	-.00032	.00011	.39106	.00000	.00000
200.450	800.150	-.12763	.08992	-.03058	-.00068	-.00015	.00013	.39095	.00000	.00000
	GRADIENT	.00000	.00000	.00000	.00000	.00000	.00000	.00000	.00000	.00000

RUN NO. 877/ 0 GRADIENT INTERVAL = -5.00/ 5.00

DLT-X	DLT-Z	CN	CA	CLM	CY	CYN	CBL	XCP/L	YCP/L	CPB
400.520	400.260	-.15595	.10088	-.01378	-.00026	-.00006	.00020	.49659	.00000	.00000
400.410	499.300	-.13925	.09539	-.02204	.00045	-.00036	.00033	.44775	.00000	.00000
400.420	600.200	-.12652	.08802	-.02991	-.00033	-.00016	.00011	.39321	.00000	.00000
400.420	750.090	-.12743	.08868	-.03035	-.00017	-.00026	.00011	.39196	.00000	.00000
400.430	800.140	-.12741	.08947	-.03035	.00004	-.00008	.00011	.39192	.00000	.00000
	GRADIENT	.00000	.00000	.00000	.00000	.00000	.00000	.00000	.00000	.00000

ORIGINAL PAGE IS OF POOR QUALITY

DATE 25 JUL 75 TABULATED SOURCE DATA - IA17A

AEDC VA422(IA17) ORB AND ET SEPARATING(ET DATA) (ATR345) (24 JUL 75)

REFERENCE DATA

SREF = 2690.0000 SQ.FT. XMRP = 1360.1000 IN. XT
LREF = 1290.3000 IN. YMRP = .0000 IN. YT
BREF = 1290.3000 IN. ZMRP = 416.4000 IN. ZT
SCALE = .0100

PARAMETRIC DATA

DLT-Y = 60.000 ALPHA = .000
BETA = 3.000 DLTALF = .000
DLTBTA = .000 MACH = 7.980
AILRON = .000 ELEVON = .000
GRID = 17.000 PO = 420.000

RUN NO. 750/ 0 GRADIENT INTERVAL = -5.00/ 5.00

DLT-X	DLT-Z	CN	CA	CLM	CY	CYN	CBL	XCP/L	YCP/L	CPB
.500	20.205	-.03564	.08541	.00672	-.03890	-.01069	.00047	.69013	.36635	.00000
.485	102.220	-.03051	.08528	.00773	-.03754	-.01037	.00050	.73522	.36532	.00000
.574	199.760	-.01253	.08371	.00568	-.03382	-.01195	.00031	.87526	.31148	.00000
.563	298.610	-.00592	.08173	.00129	-.03356	-.01190	.00039	.71043	.31066	.00000
.447	398.100	-.00567	.08184	.00133	-.03529	-.01246	.00040	.72217	.31176	.00000
.672	499.760	-.00641	.08192	.00142	-.03383	-.01203	.00039	.71321	.30988	.00000
	GRADIENT	.00000	.00000	.00000	.00000	.00000	.00000	.00000	.00000	.00000

RUN NO. 749/ 0 GRADIENT INTERVAL = -5.00/ 5.00

DLT-X	DLT-Z	CN	CA	CLM	CY	CYN	CBL	XCP/L	YCP/L	CPB
200.430	20.910	-.04328	.08747	-.00048	-.04040	-.01208	.00047	.55066	.34942	.00000
200.500	101.390	-.03480	.08697	.00997	-.03832	-.00995	.00045	.75848	.37695	.00000
200.580	202.180	-.01684	.08522	.00730	-.03419	-.01224	.00036	.86132	.30810	.00000
200.530	301.490	-.00600	.08178	.00151	-.03428	-.01214	.00038	.73424	.31103	.00000
200.510	400.310	-.00584	.08180	.00123	-.03423	-.01198	.00039	.70517	.31372	.00000
200.500	500.210	-.00594	.08190	.00140	-.03389	-.01211	.00038	.72244	.30875	.00000
	GRADIENT	.00000	.00000	.00000	.00000	.00000	.00000	.00000	.00000	.00000

AEDC VA422(IA17) ORB AND ET SEPARATING(ET DATA) (ATR346) (24 JUL 75)

REFERENCE DATA

SREF = 2690.0000 SQ.FT. XMRP = 1360.1000 IN. XT
LREF = 1290.3000 IN. YMRP = .0000 IN. YT
BREF = 1290.3000 IN. ZMRP = 416.4000 IN. ZT
SCALE = .0100

PARAMETRIC DATA

DLT-Y = 60.000 ALPHA = .000
BETA = 3.000 DLTALF = -10.000
DLTBTA = .000 MACH = 7.980
AILRON = .000 ELEVON = .000
GRID = 17.000 PO = 420.000

RUN NO. 758/ 0 GRADIENT INTERVAL = -5.00/ 5.00

DLT-X	DLT-Z	CN	CA	CLM	CY	CYN	CBL	XCP/L	YCP/L	CPB
.620	402.490	-.15028	.10515	-.01461	-.03517	-.00995	.00053	.49042	.36061	.00000
.628	496.500	-.12900	.09247	-.02769	-.03561	-.00998	.00040	.40840	.36253	.00000
.513	598.970	-.12760	.09298	-.02856	-.03563	-.01012	.00039	.40195	.35986	.00000
.616	750.110	-.12924	.09302	-.02884	-.03584	-.01013	.00039	.40243	.36086	.00000
.552	800.180	-.12943	.09319	-.02880	-.03598	-.01013	.00039	.40288	.36158	.00000
	GRADIENT	.00000	.00000	.00000	.00000	.00000	.00000	.00000	.00000	.00000

RUN NO. 757/ 0 GRADIENT INTERVAL = -5.00/ 5.00

DLT-X	DLT-Z	CN	CA	CLM	CY	CYN	CBL	XCP/L	YCP/L	CPB
200.490	402.600	-.15551	.10402	-.01295	-.03809	-.00893	.00030	.50016	.39461	.00000
200.530	500.250	-.13498	.09585	-.02415	-.03598	-.00968	.00037	.43334	.37040	.00000
200.530	600.160	-.12876	.09326	-.02878	-.03514	-.00987	.00038	.40216	.36213	.00000
200.540	750.040	-.12955	.09349	-.02882	-.03550	-.01001	.00038	.40290	.36143	.00000
200.540	800.120	-.12957	.09344	-.02880	-.03600	-.01018	.00039	.40304	.36082	.00000
	GRADIENT	.00000	.00000	.00000	.00000	.00000	.00000	.00000	.00000	.00000

RUN NO. 756/ 0 GRADIENT INTERVAL = -5.00/ 5.00

DLT-X	DLT-Z	CN	CA	CLM	CY	CYN	CBL	XCP/L	YCP/L	CPB
400.470	400.320	-.15922	.10435	-.01242	-.03825	-.00851	.00030	.50385	.40289	.00000
400.470	498.780	-.14349	.10217	-.01876	-.03549	-.00976	.00045	.46701	.36631	.00000
400.480	600.240	-.12879	.09272	-.02862	-.03507	-.00981	.00038	.40309	.36298	.00000
400.490	750.170	-.12950	.09329	-.02879	-.03567	-.01010	.00038	.40300	.36054	.00000
400.420	800.150	-.12941	.09372	-.02880	-.03582	-.01011	.00039	.40285	.36122	.00000
	GRADIENT	.00000	.00000	.00000	.00000	.00000	.00000	.00000	.00000	.00000

AEDC VA422(IA17) ORB AND ET SEPARATING(ET DATA) (ATR348) (24 JUL 75)

REFERENCE DATA

SREF = 2690.0000 SQ.FT. XMRP = 1360.1000 IN. XT
LREF = 1290.3000 IN. YMRP = .0000 IN. YT
BREF = 1290.3000 IN. ZMRP = 416.4000 IN. ZT
SCALE = .0100

PARAMETRIC DATA

DLT-Y = 60.000 ALPHA = .000
BETA = 3.000 DLTALF = -20.000
DLTBTA = .000 MACH = 7.980
AILRON = .000 ELEVON = .000
GRID = 17.000 PO = 420.000

RUN NO. 767/ 0 GRADIENT INTERVAL = -5.00/ 5.00

DLT-X	DLT-Z	CN	CA	CLM	CY	CYN	CBL	XCP/L	YCP/L	CPB
.397	800.240	-.33130	.12308	-.03368	-.04503	-.00728	.00036	.48731	.44534	.00000
.359	898.540	-.33194	.12305	-.03343	-.04510	-.00698	.00035	.48799	.45025	.00000
.504	1000.200	-.33259	.12285	-.03285	-.04502	-.00708	.00036	.48933	.44847	.00000
	GRADIENT	.00000	.00000	.00000	.00000	.00000	.00000	.00000	.00000	.00000

RUN NO. 765/ 0 GRADIENT INTERVAL = -5.00/ 5.00

DLT-X	DLT-Z	CN	CA	CLM	CY	CYN	CBL	XCP/L	YCP/L	CPB
200.420	751.480	-.34777	.12399	-.02433	-.04493	-.00697	.00036	.50947	.44993	.00000
200.430	799.320	-.33452	.12232	-.03249	-.04505	-.00724	.00037	.49048	.44610	.00000
200.450	900.140	-.33236	.12293	-.03328	-.04434	-.00699	.00035	.48843	.44813	.00000
200.460	1000.300	-.33251	.12333	-.03306	-.04439	-.00682	.00032	.48888	.45106	.00000
	GRADIENT	.00000	.00000	.00000	.00000	.00000	.00000	.00000	.00000	.00000

RUN NO. 764/ 0 GRADIENT INTERVAL = -5.00/ 5.00

DLT-X	DLT-Z	CN	CA	CLM	CY	CYN	CBL	XCP/L	YCP/L	CPB
400.370	750.190	-.35743	.13324	-.01826	-.04386	-.00754	.00049	.52266	.43823	.00000
400.440	800.330	-.34281	.12245	-.02714	-.04482	-.00715	.00035	.50302	.44693	.00000
400.450	900.390	-.33070	.12284	-.03342	-.04481	-.00734	.00033	.48774	.44391	.00000
400.440	1000.300	-.33243	.12290	-.03339	-.04487	-.00709	.00031	.48818	.44800	.00000
	GRADIENT	.00000	.00000	.00000	.00000	.00000	.00000	.00000	.00000	.00000

AEDC VA422(IA17) ORB AND ET SEPARATING(ET DATA) (ATR349) (24 JUL 75)

REFERENCE DATA

SREF = 2690.0000 SQ.FT. XMRP = 1360.1000 IN. XT
LREF = 1290.3000 IN. YMRP = .0000 IN. YT
BREF = 1290.3000 IN. ZMRP = 416.4000 IN. ZT
SCALE = .0100

PARAMETRIC DATA

DLT-Y = 60.000 ALPHA = .000
BETA = 3.000 DLTALF = .000
DLTBTA = 3.000 MACH = 7.980
AILRON = .000 ELEVON = .000
GRID = 17.000 PO = 420.000

RUN NO. 774/ 0 GRADIENT INTERVAL = -5.00/ 5.00

DLT-X	DLT-Z	CN	CA	CLM	CY	CYN	CBL	XCP/L	YCP/L	CPB
.571	18.300	-.03814	.08745	.00723	-.07377	-.02052	.00083	.69073	.36398	.00000
.530	99.726	-.03263	.08614	.00875	-.07021	-.02124	.00090	.74561	.34695	.00000
.493	201.610	-.01091	.08372	.00411	-.06701	-.02336	.00058	.82158	.31476	.00000
.579	302.360	-.00535	.08166	.00075	-.06913	-.02286	.00071	.65582	.32733	.00000
.605	400.470	-.00470	.08229	.00083	-.07006	-.02300	.00072	.68193	.32898	.00000
.647	500.150	-.00561	.08229	.00100	-.07011	-.02327	.00072	.68232	.32643	.00000
	GRADIENT	.00000	.00000	.00000	.00000	.00000	.00000	.00000	.00000	.00000

RUN NO. 775/ 0 GRADIENT INTERVAL = -5.00/ 5.00

DLT-X	DLT-Z	CN	CA	CLM	CY	CYN	CBL	XCP/L	YCP/L	CPB
200.490	23.757	-.04758	.08699	-.00091	-.07726	-.02124	.00092	.54492	.36629	.00000
200.520	99.294	-.03649	.08776	.01049	-.07170	-.02091	.00082	.75924	.35459	.00000
200.530	199.140	-.01440	.08485	.00634	-.06906	-.02358	.00058	.86611	.31980	.00000
200.580	297.630	-.00608	.08207	.00151	-.06863	-.02298	.00069	.73152	.32437	.00000
200.560	398.620	-.00487	.08207	.00099	-.07029	-.02320	.00072	.70052	.32774	.00000
200.570	500.000	-.00554	.08216	.00109	-.07046	-.02328	.00071	.69511	.32751	.00000
	GRADIENT	.00000	.00000	.00000	.00000	.00000	.00000	.00000	.00000	.00000

ORIGINAL PAGE IS OF POOR QUALITY

AEDC VA422(IA17) ORB AND ET SEPARATING(ET DATA) (ATR350) (24 JUL 75)

REFERENCE DATA

SREF = 2690.0000 SQ.FT. XMRP = 1360.1000 IN. XT
LREF = 1290.3000 IN. YMRP = .0000 IN. YT
BREF = 1290.3000 IN. ZMRP = 416.4000 IN. ZT
SCALE = .0100

PARAMETRIC DATA

DLT-Y = 60.000 ALPHA = .000
BETA = 3.000 DLTALF = -10.000
DLTBTA = 3.000 MACH = 7.980
AILRON = .000 ELEVON = .000
GRID = 17.000 PO = 420.000

RUN NO. 771/ 0 GRADIENT INTERVAL = -5.00/ 5.00

DLT-X	DLT-Z	CN	CA	CLM	CY	CYN	CBL	XCP/L	YCP/L	CPB
.489	404.070	-.15206	.10402	-.01570	-.07325	-.01962	.00049	.48622	.37125	.00000
.455	501.260	-.13322	.09410	-.02760	-.07300	-.01995	.00063	.41359	.36745	.00000
.440	600.080	-.13320	.09495	-.02807	-.07358	-.02003	.00067	.41111	.36814	.00000
.453	750.000	-.13445	.09478	-.02822	-.07459	-.02031	.00067	.41170	.36813	.00000
.099	802.240	-.13594	.09517	-.02818	-.07577	-.02050	.00067	.41351	.36929	.00000
	GRADIENT	.00000	.00000	.00000	.00000	.00000	.00000	.00000	.00000	.00000

RUN NO. 772/ 0 GRADIENT INTERVAL = -5.00/ 5.00

DLT-X	DLT-Z	CN	CA	CLM	CY	CYN	CBL	XCP/L	YCP/L	CPB
200.570	398.120	-.15939	.10361	-.01144	-.07365	-.01984	.00072	.50818	.37014	.00000
200.520	497.550	-.13682	.09544	-.02381	-.07327	-.02044	.00052	.43676	.36343	.00000
200.470	599.820	-.13125	.09414	-.02779	-.07392	-.02007	.00066	.41042	.36862	.00000
200.510	750.100	-.13298	.09442	-.02796	-.07441	-.02030	.00067	.41144	.36777	.00000
200.510	800.210	-.13368	.09440	-.02790	-.07432	-.02036	.00066	.41252	.36699	.00000
	GRADIENT	.00000	.00000	.00000	.00000	.00000	.00000	.00000	.00000	.00000

RUN NO. 773/ 0 GRADIENT INTERVAL = -5.00/ 5.00

DLT-X	DLT-Z	CN	CA	CLM	CY	CYN	CBL	XCP/L	YCP/L	CPB
400.490	401.660	-.16619	.10548	-.00990	-.07667	-.01881	.00070	.51670	.38693	.00000
400.500	500.000	-.14439	.10052	-.01969	-.07444	-.02013	.00049	.46309	.36940	.00000
400.520	600.150	-.13203	.09381	-.02774	-.07398	-.02000	.00066	.41154	.36949	.00000
400.560	750.100	-.13301	.09511	-.02793	-.07452	-.02043	.00066	.41165	.36679	.00000
400.620	800.170	-.13360	.09401	-.02794	-.07387	-.02028	.00066	.41221	.36653	.00000
	GRADIENT	.00000	.00000	.00000	.00000	.00000	.00000	.00000	.00000	.00000

AEDC VA422(IA17) ORB AND ET SEPARATING(ET DATA) (ATR352) (24 JUL 75)

REFERENCE DATA

SREF = 2690.0000 SQ.FT. XMRP = 1360.1000 IN. XT
LREF = 1290.3000 IN. YMRP = .0000 IN. YT
BREF = 1290.3000 IN. ZMRP = 416.4000 IN. ZT
SCALE = .0100

PARAMETRIC DATA

DLT-Y = 60.000 ALPHA = .000
BETA = 3.000 DLTALF = -20.000
DLTBTA = 3.000 MACH = 7.980
AILRON = .000 ELEVON = .000
GRID = 17.000 PO = 420.000

RUN NO. 770/ 0 GRADIENT INTERVAL = -5.00/ 5.00

DLT-X	DLT-Z	CN	CA	CLM	CY	CYN	CBL	XCP/L	YCP/L	CPB
.508	802.180	-.34139	.12649	-.02984	-.09423	-.01461	.00083	.49728	.44998	.00000
.492	900.380	-.34227	.12725	-.02945	-.09462	-.01482	.00085	.49822	.44890	.00000
.503	1000.300	-.34321	.12755	-.02909	-.09337	-.01447	.00082	.49912	.45009	.00000
	GRADIENT	.00000	.00000	.00000	.00000	.00000	.00000	.00000	.00000	.00000

RUN NO. 768/ 0 GRADIENT INTERVAL = -5.00/ 5.00

DLT-X	DLT-Z	CN	CA	CLM	CY	CYN	CBL	XCP/L	YCP/L	CPB
200.530	751.170	-.35451	.12716	-.02232	-.09260	-.01467	.00065	.51435	.44768	.00000
200.550	800.480	-.34261	.12676	-.02925	-.09371	-.01448	.00078	.49870	.45040	.00000
200.560	900.260	-.34227	.12750	-.02965	-.09387	-.01454	.00084	.49782	.45010	.00000
200.460	1000.300	-.34293	.12729	-.02939	-.09408	-.01461	.00082	.49847	.44985	.00000
	GRADIENT	.00000	.00000	.00000	.00000	.00000	.00000	.00000	.00000	.00000

RUN NO. 769/ 0 GRADIENT INTERVAL = -5.00/ 5.00

DLT-X	DLT-Z	CN	CA	CLM	CY	CYN	CBL	XCP/L	YCP/L	CPB
400.410	749.110	-.36493	.13460	-.01548	-.09621	-.01385	.00053	.52871	.45775	.00000
400.590	800.430	-.35134	.12677	-.02415	-.09469	-.01481	.00076	.51031	.44909	.00000
400.560	900.380	-.34233	.12728	-.02975	-.09426	-.01461	.00084	.49762	.45007	.00000
400.470	1000.200	-.34139	.12663	-.02969	-.09440	-.01448	.00085	.49758	.45117	.00000
	GRADIENT	.00000	.00000	.00000	.00000	.00000	.00000	.00000	.00000	.00000

AEDC VA422(IA17) ORB AND ET SEPARATING(ET DATA) (ATR353) (24 JUL 75)

REFERENCE DATA

SREF = 2690.0000 SQ.FT. XMRP = 1360.1000 IN. XT
LREF = 1290.3000 IN. YMRP = .0000 IN. YT
BREF = 1290.3000 IN. ZMRP = 416.4000 IN. ZT
SCALE = .0100

PARAMETRIC DATA

DLT-Y = 60.000 ALPHA = 5.000
BETA = 3.000 DLTALF = .000
DLTBTA = .000 MACH = 7.980
AILRON = .000 ELEVON = .000
GRID = 25.000 PO = 420.000

RUN NO. 810/ 0 GRADIENT INTERVAL = -5.00/ 5.00

DLT-X	DLT-Z	CN	CA	CLM	CY	CYN	CBL	XCP/L	YCP/L	CPB
.650	20.148	.02146	.08626	.02659	-.03951	-.01041	.00047	-.30714	.37421	.00000
.648	102.130	.02360	.08505	.02564	-.03631	-.01028	.00050	-.20080	.36054	.00000
.708	202.200	.04227	.08238	.02303	-.03349	-.01197	.00033	.17763	.30867	.00000
.641	300.400	.05182	.08165	.01932	-.03583	-.01147	.00037	.29787	.33460	.00000
.693	398.340	.05272	.08184	.01961	-.03584	-.01170	.00037	.29845	.33030	.00000
.696	497.830	.05192	.08166	.01955	-.03680	-.01216	.00037	.29530	.32741	.00000
	GRADIENT	.00000	.00000	.00000	.00000	.00000	.00000	.00000	.00000	.00000

RUN NO. 809/ 0 GRADIENT INTERVAL = -5.00/ 5.00

DLT-X	DLT-Z	CN	CA	CLM	CY	CYN	CBL	XCP/L	YCP/L	CPB
200.610	18.932	.01547	.08654	.01882	-.04604	-.01111	.00049	-.29154	.38979	.00000
200.560	99.465	.01899	.08687	.02790	-.03978	-.01045	.00046	-.46811	.37478	.00000
200.570	200.960	.04114	.08320	.02396	-.03384	-.01256	.00033	.15157	.29919	.00000
200.570	302.450	.05147	.08119	.01916	-.03592	-.01173	.00036	.29825	.33012	.00000
200.610	401.020	.05188	.08180	.01936	-.03690	-.01200	.00037	.29767	.33115	.00000
200.600	500.020	.05194	.08188	.01926	-.03557	-.01175	.00036	.29933	.32752	.00000
	GRADIENT	.00000	.00000	.00000	.00000	.00000	.00000	.00000	.00000	.00000

AEDC VA422(IA17) ORB AND ET SEPARATING(ET DATA) (ATR354) (24 JUL 75)

REFERENCE DATA

SREF = 2690.0000 SQ.FT. XMRP = 1360.1000 IN. XT
LREF = 1290.3000 IN. YMRP = .0000 IN. YT
BREF = 1290.3000 IN. ZMRP = 416.4000 IN. ZT
SCALE = .0100

PARAMETRIC DATA

DLT-Y = 60.000 ALPHA = 5.000
BETA = 3.000 DLTALF = -10.000
DLTBTA = .000 MACH = 7.980
AILRON = .000 ELEVON = .000
GRID = 25.000 PO = 420.000

RUN NO. 818/ 0 GRADIENT INTERVAL = -5.00/ 5.00

DLT-X	DLT-Z	CN	CA	CLM	CY	CYN	CBL	XCP/L	YCP/L	CPB
.627	401.800	-.07013	.08550	-.00915	-.03249	-.01094	.00025	.46714	.32311	.00000
.621	497.370	-.05938	.08517	-.01505	-.03315	-.01156	.00032	.38132	.31481	.00000
.601	597.250	-.06029	.08573	-.01526	-.03303	-.01130	.00032	.38155	.31926	.00000
	GRADIENT	.00000	.00000	.00000	.00000	.00000	.00000	.00000	.00000	.00000

AEDC VA422(IA17) ORB AND ET SEPARATING(ET DATA) (ATR354) (24 JUL 75)

REFERENCE DATA

SREF = 2690.0000 SQ.FT. XMRP = 1360.1000 IN. XT
LREF = 1290.3000 IN. YMRP = .0000 IN. YT
BREF = 1290.3000 IN. ZMRP = 416.4000 IN. ZT
SCALE = .0100

PARAMETRIC DATA

DLT-Y = 60.000 ALPHA = 5.000
BETA = 3.000 DLTALF = -10.000
DLTBTA = .000 MACH = 7.980
AILRON = .000 ELEVON = .000
GRID = 25.000 PO = 420.000

RUN NO. 817/ 0 GRADIENT INTERVAL = -5.00/ 5.00

DLT-X	DLT-Z	CN	CA	CLM	CY	CYN	CBL	XCP/L	YCP/L	CPB
200.490	403.290	-.07791	.09008	-.00416	-.03303	-.01069	.00023	.52100	.33231	.00000
200.530	501.780	-.06062	.08524	-.01536	-.03411	-.01166	.00033	.38128	.31953	.00000
200.460	600.120	-.06086	.08550	-.01548	-.03329	-.01149	.00032	.38064	.31727	.00000
	GRADIENT	.00000	.00000	.00000	.00000	.00000	.00000	.00000	.00000	.00000

RUN NO. 816/ 0 GRADIENT INTERVAL = -5.00/ 5.00

DLT-X	DLT-Z	CN	CA	CLM	CY	CYN	CBL	XCP/L	YCP/L	CPB
400.530	400.060	-.09097	.09832	.00390	-.03329	-.01092	.00031	.58826	.32913	.00000
400.640	497.750	-.06036	.08465	-.01525	-.03326	-.01142	.00031	.38177	.31845	.00000
400.510	599.600	-.06050	.08535	-.01543	-.03341	-.01144	.00032	.38016	.31909	.00000
	GRADIENT	.00000	.00000	.00000	.00000	.00000	.00000	.00000	.00000	.00000

AEDC VA422(IA17) ORB AND ET SEPARATING(ET DATA) (ATR356) (24 JUL 75)

REFERENCE DATA

SREF = 2690.0000 SQ.FT. XMRP = 1360.1000 IN. XT
LREF = 1290.3000 IN. YMRP = .0000 IN. YT
BREF = 1290.3000 IN. ZMRP = 416.4000 IN. ZT
SCALE = .0100

PARAMETRIC DATA

DLT-Y = 60.000 ALPHA = 5.000
BETA = 3.000 DLTALF = -20.000
DLTBTA = .000 MACH = 7.980
AILRON = .000 ELEVON = .000
GRID = 25.000 PO = 420.000

RUN NO. 827/ 0 GRADIENT INTERVAL = -5.00/ 5.00

DLT-X	DLT-Z	CN	CA	CLM	CY	CYN	CBL	XCP/L	YCP/L	CPB
.422	800.200	-.21343	.10553	-.03514	-.03859	-.00868	.00031	.44331	.40113	.00000
.538	899.180	-.21446	.10548	-.03527	-.03948	-.00908	.00032	.44344	.39767	.00000
.570	1000.300	-.21447	.10561	-.03565	-.03977	-.00897	.00032	.44223	.40071	.00000
	GRADIENT	.00000	.00000	.00000	.00000	.00000	.00000	.00000	.00000	.00000

RUN NO. 825/ 0 GRADIENT INTERVAL = -5.00/ 5.00

DLT-X	DLT-Z	CN	CA	CLM	CY	CYN	CBL	XCP/L	YCP/L	CPB
200.400	750.410	-.21353	.10553	-.03521	-.03912	-.00865	.00032	.44315	.40383	.00000
200.550	800.040	-.21341	.10565	-.03514	-.03875	-.00872	.00031	.44329	.40109	.00000
200.500	900.310	-.21414	.10534	-.03527	-.03904	-.00895	.00032	.44328	.39811	.00000
200.560	1000.200	-.21416	.10611	-.03563	-.03929	-.00881	.00031	.44210	.40170	.00000
	GRADIENT	.00000	.00000	.00000	.00000	.00000	.00000	.00000	.00000	.00000

AEDC VA422(IA17) ORB AND ET SEPARATING(ET DATA) (ATR356) (24 JUL 75)

REFERENCE DATA

SREF = 2690.0000 SQ.FT. XMRP = 1360.1000 IN. XT
LREF = 1290.3000 IN. YMRP = .0000 IN. YT
BREF = 1290.3000 IN. ZMRP = 416.4000 IN. ZT
SCALE = .0100

PARAMETRIC DATA

DLT-Y = 60.000 ALPHA = 5.000
BETA = 3.000 DLTALF = -20.000
DLTBTA = .000 MACH = 7.980
AILRON = .000 ELEVON = .000
GRID = 25.000 PO = 420.000

RUN NO. 824/ 0 GRADIENT INTERVAL = -5.00/ 5.00

DLT-X	DLT-Z	CN	CA	CLM	CY	CYN	CBL	XCP/L	YCP/L	CPB
400.560	750.280	-.21360	.10471	-.03519	-.03984	-.00888	.00031	.44324	.40261	.00000
400.480	800.390	-.21355	.10535	-.03516	-.03997	-.00903	.00031	.44333	.40047	.00000
400.530	900.210	-.21429	.10530	-.03514	-.04037	-.00923	.00033	.44376	.39852	.00000
400.600	1000.200	-.21447	.10524	-.03551	-.03915	-.00878	.00030	.44266	.40161	.00000
	GRADIENT	.00000	.00000	.00000	.00000	.00000	.00000	.00000	.00000	.00000

AEDC VA422(IA17) ORB AND ET SEPARATING(ET DATA) (ATR357) (24 JUL 75)

REFERENCE DATA

SREF = 2690.0000 SQ.FT. XMRP = 1360.1000 IN. XT
LREF = 1290.3000 IN. YMRP = .0000 IN. YT
BREF = 1290.3000 IN. ZMRP = 416.4000 IN. ZT
SCALE = .0100

PARAMETRIC DATA

DLT-Y = 60.000 ALPHA = 5.000
BETA = 3.000 DLTALF = .000
DLTBTA = 3.000 MACH = 7.980
AILRON = .000 ELEVON = .000
GRID = 25.000 PO = 420.000

RUN NO. 834/ 0 GRADIENT INTERVAL = -5.00/ 5.00

DLT-X	DLT-Z	CN	CA	CLM	CY	CYN	CBL	XCP/L	YCP/L	CPB
.540	18.446	.01980	.08938	.02755	-.07241	-.02048	.00078	-.41378	.36073	.00000
.584	97.336	.02821	.08767	.02470	-.06901	-.02157	.00075	-.05349	.34000	.00000
.713	199.290	.04294	.08652	.02330	-.06682	-.02341	.00049	.17923	.31365	.00000
.703	301.660	.05233	.08349	.01835	-.07097	-.02163	.00070	.31338	.34546	.00000
.647	402.510	.05254	.08371	.01851	-.07081	-.02146	.00069	.31217	.34664	.00000
1.035	498.220	.05324	.08428	.01845	-.07151	-.02197	.00070	.31626	.34375	.00000
	GRADIENT	.00000	.00000	.00000	.00000	.00000	.00000	.00000	.00000	.00000

RUN NO. 835/ 0 GRADIENT INTERVAL = -5.00/ 5.00

DLT-X	DLT-Z	CN	CA	CLM	CY	CYN	CBL	XCP/L	YCP/L	CPB
200.540	23.322	.00720	.09005	.01983	-.07811	-.02016	.00093	-1.36520	.37803	.00000
200.610	101.050	.01923	.08930	.02577	-.06962	-.02052	.00081	-.37810	.35241	.00000
200.530	200.830	.03951	.08736	.02419	-.06466	-.02344	.00046	.13055	.30513	.00000
200.640	299.530	.05255	.08362	.01860	-.07036	-.02141	.00069	.31106	.34575	.00000
200.640	397.150	.05356	.08431	.01888	-.07128	-.02184	.00070	.31203	.34425	.00000
200.650	498.760	.05288	.08377	.01855	-.07081	-.02177	.00069	.31328	.34351	.00000
	GRADIENT	.00000	.00000	.00000	.00000	.00000	.00000	.00000	.00000	.00000

AEDC VA422(IA17) ORB AND ET SEPARATING(ET DATA) (ATR358) (24 JUL 75)

REFERENCE DATA

SREF = 2690.0000 SQ.FT. XMRP = 1360.1000 IN. XT
LREF = 1290.3000 IN. YMRP = .0000 IN. YT
BREF = 1290.3000 IN. ZMRP = 416.4000 IN. ZT
SCALE = .0100

PARAMETRIC DATA

DLT-Y = 60.000 ALPHA = 5.000
BETA = 3.000 DLTALF = -10.000
DLTBTA = 3.000 MACH = 7.980
AILRON = .000 ELEVON = .000
GRID = 25.000 PO = 420.000

RUN NO. 831/ 0 GRADIENT INTERVAL = -5.00/ 5.00

DLT-X	DLT-Z	CN	CA	CLM	CY	CYN	CBL	XCP/L	YCP/L	CPB
.483	402.890	-.06823	.08678	-.00987	-.06721	-.02159	.00042	.45932	.33393	.00000
.500	503.250	-.06066	.08815	-.01446	-.06703	-.02127	.00060	.39187	.33666	.00000
-.357	604.190	-.06240	.08875	-.01492	-.06932	-.02160	.00062	.39134	.34066	.00000
	GRADIENT	.00000	.00000	.00000	.00000	.00000	.00000	.00000	.00000	.00000

RUN NO. 832/ 0 GRADIENT INTERVAL = -5.00/ 5.00

DLT-X	DLT-Z	CN	CA	CLM	CY	CYN	CBL	XCP/L	YCP/L	CPB
200.520	398.790	-.07439	.08855	-.00559	-.06793	-.02173	.00034	.50585	.33491	.00000
200.490	496.520	-.05929	.08750	-.01401	-.06717	-.02126	.00060	.39321	.33723	.00000
200.690	598.220	-.06014	.08808	-.01432	-.06797	-.02136	.00061	.39198	.33883	.00000
	GRADIENT	.00000	.00000	.00000	.00000	.00000	.00000	.00000	.00000	.00000

RUN NO. 833/ 0 GRADIENT INTERVAL = -5.00/ 5.00

DLT-X	DLT-Z	CN	CA	CLM	CY	CYN	CBL	XCP/L	YCP/L	CPB
400.480	402.620	-.08447	.09423	-.00018	-.06678	-.02096	.00025	.55682	.33912	.00000
400.620	500.670	-.06036	.08778	-.01416	-.06758	-.02144	.00059	.39440	.33672	.00000
400.690	599.960	-.06040	.08822	-.01438	-.06845	-.02141	.00061	.39201	.33986	.00000
	GRADIENT	.00000	.00000	.00000	.00000	.00000	.00000	.00000	.00000	.00000

ORIGINAL PAGE IS OF POOR QUALITY

AEDC VA422(1A17) ORB AND ET SEPARATING(ET DATA) (ATR360) (24 JUL 75)

REFERENCE DATA

SREF = 2690.0000 SQ.FT. XMRP = 1360.1000 IN. XT
LREF = 1290.3000 IN. YMRP = .0000 IN. YT
BREF = 1290.3000 IN. ZMRP = 416.4000 IN. ZT
SCALE = .0100

PARAMETRIC DATA

DLT-Y = 60.000 ALPHA = 5.000
BETA = 3.000 DLTALF = -20.000
DLTBTA = 3.000 MACH = 7.980
AILRON = .000 ELEVON = .000
GRID = 25.000 PO = 420.000

RUN NO. 830/ 0 GRADIENT INTERVAL = -5.00/ 5.00

DLT-X	DLT-Z	CN	CA	CLM	CY	CYN	CBL	XCP/L	YCP/L	CPB
.536	801.440	-.22006	.10760	-.03282	-.08219	-.01790	.00064	.45415	.40616	.00000
.558	900.230	-.22070	.10795	-.03301	-.08216	-.01822	.00064	.45385	.40342	.00000
.472	1000.200	-.22133	.10766	-.03334	-.08216	-.01806	.00065	.45311	.40474	.00000
	GRADIENT	.00000	.00000	.00000	.00000	.00000	.00000	.00000	.00000	.00000

RUN NO. 828/ 0 GRADIENT INTERVAL = -5.00/ 5.00

DLT-X	DLT-Z	CN	CA	CLM	CY	CYN	CBL	XCP/L	YCP/L	CPB
200.490	750.500	-.21960	.10740	-.03291	-.08259	-.01789	.00064	.45365	.40698	.00000
200.530	800.190	-.21993	.10698	-.03282	-.08242	-.01776	.00065	.45409	.40782	.00000
200.420	900.240	-.22025	.10796	-.03299	-.08251	-.01787	.00065	.45370	.40704	.00000
200.450	1000.200	-.22136	.10777	-.03335	-.08192	-.01796	.00064	.45307	.40517	.00000
	GRADIENT	.00000	.00000	.00000	.00000	.00000	.00000	.00000	.00000	.00000

RUN NO. 829/ 0 GRADIENT INTERVAL = -5.00/ 5.00

DLT-X	DLT-Z	CN	CA	CLM	CY	CYN	CBL	XCP/L	YCP/L	CPB
400.560	750.050	-.22042	.10727	-.03297	-.08265	-.01779	.00063	.45384	.40794	.00000
400.500	800.270	-.22062	.10812	-.03285	-.08191	-.01782	.00064	.45431	.40638	.00000
400.480	900.280	-.22051	.10787	-.03302	-.08118	-.01773	.00064	.45373	.40572	.00000
400.520	1000.200	-.22139	.10782	-.03333	-.08255	-.01800	.00064	.45317	.40600	.00000
	GRADIENT	.00000	.00000	.00000	.00000	.00000	.00000	.00000	.00000	.00000

AEDC VA422(IA17) ORB AND ET SEPARATING(ET DATA) (ATR361) (24 JUL 75)

REFERENCE DATA

SREF = 2690.0000 SQ.FT. XMRP = 1360.1000 IN. XT
LREF = 1290.3000 IN. YMRP = .0000 IN. YT
BREF = 1290.3000 IN. ZMRP = 416.4000 IN. ZT
SCALE = .0100

PARAMETRIC DATA

DLT-Y = 60.000 ALPHA = -5.000
BETA = 3.000 DLTALF = .000
DLTBTA = .000 MACH = 7.980
AILRON = .000 ELEVON = .000
GRID = 18.000 PO = 420.000

RUN NO. 841/ 0 GRADIENT INTERVAL = -5.00/ 5.00

DLT-X	DLT-Z	CN	CA	CLM	CY	CYN	CBL	XCP/L	YCP/L	CPB
.526	20.229	-.09406	.08793	-.01353	-.04103	-.01085	.00043	.45782	.37352	.00000
.427	100.560	-.08748	.08889	-.00956	-.03917	-.01013	.00038	.48196	.37768	.00000
.539	198.080	-.07509	.08990	-.00904	-.03625	-.01129	.00029	.47427	.34062	.00000
.595	298.130	-.06632	.08544	-.01459	-.03554	-.01221	.00033	.40464	.31836	.00000
.551	399.540	-.06496	.08575	-.01633	-.03566	-.01220	.00033	.38272	.31936	.00000
.599	500.080	-.06469	.08568	-.01653	-.03533	-.01211	.00034	.37979	.31883	.00000
	GRADIENT	.00000	.00000	.00000	.00000	.00000	.00000	.00000	.00000	.00000

RUN NO. 840/ 0 GRADIENT INTERVAL = -5.00/ 5.00

DLT-X	DLT-Z	CN	CA	CLM	CY	CYN	CBL	XCP/L	YCP/L	CPB
200.450	23.093	-.10160	.08989	-.01958	-.03778	-.01175	.00042	.42373	.34107	.00000
200.570	102.430	-.08858	.08999	-.00960	-.03875	-.00989	.00028	.48262	.37997	.00000
200.520	202.220	-.07743	.08861	-.01073	-.03656	-.01067	.00033	.46151	.35442	.00000
200.550	300.370	-.07301	.09071	-.01044	-.03469	-.01150	.00032	.45847	.32676	.00000
200.530	400.120	-.06411	.08579	-.01641	-.03457	-.01177	.00033	.37953	.32044	.00000
200.490	500.080	-.06490	.08590	-.01647	-.03365	-.01177	.00032	.38108	.31408	.00000
	GRADIENT	.00000	.00000	.00000	.00000	.00000	.00000	.00000	.00000	.00000

AEDC VA422(IA17) ORB AND ET SEPARATING(ET DATA) (ATR362) (24 JUL 75)

REFERENCE DATA

SREF = 2690.0000 SQ.FT. XMRP = 1360.1000 IN. XT
LREF = 1290.3000 IN. YMRP = .0000 IN. YT
BREF = 1290.3000 IN. ZMRP = 416.4000 IN. ZT
SCALE = .0100

PARAMETRIC DATA

DLT-Y = 60.000 ALPHA = -5.000
BETA = 3.000 DLTALF = -10.000
DLTBTA = .000 MACH = 7.980
AILRON = .000 ELEVON = .000
GRID = 18.000 PO = 420.000

RUN NO. 849/ 0 GRADIENT INTERVAL = -5.00/ 5.00

DLT-X	DLT-Z	CN	CA	CLM	CY	CYN	CBL	XCP/L	YCP/L	CPB
.435	402.370	-.25097	.11601	-.01852	-.04289	-.00760	.00012	.50678	.43458	.00000
.484	496.880	-.23698	.11332	-.02446	-.03950	-.00922	.00050	.48622	.39522	.00000
.421	600.010	-.22012	.10485	-.03524	-.04124	-.00894	.00032	.44651	.40682	.00000
	GRADIENT	.00000	.00000	.00000	.00000	.00000	.00000	.00000	.00000	.00000

AEDC VA422(IA17) ORB AND ET SEPARATING(ET DATA) (ATR362) (24 JUL 75)

REFERENCE DATA

SREF = 2690.0000 SQ.FT. XMRP = 1360.1000 IN. XT
LREF = 1290.3000 IN. YMRP = .0000 IN. YT
BREF = 1290.3000 IN. ZMRP = 416.4000 IN. ZT
SCALE = .0100

PARAMETRIC DATA

DLT-Y = 60.000 ALPHA = -5.000
BETA = 3.000 DLTALF = -10.000
DLTBTA = .000 MACH = 7.980
AILRON = .000 ELEVON = .000
GRID = 18.000 PO = 420.000

RUN NO. 848/ 0 GRADIENT INTERVAL = -5.00/ 5.00

DLT-X	DLT-Z	CN	CA	CLM	CY	CYN	CBL	XCP/L	YCP/L	CPB
200.470	400.820	-.24341	.11003	-.02561	-.04234	-.00746	.00027	.48482	.43523	.00000
200.440	500.200	-.24760	.12150	-.01798	-.03958	-.00965	.00050	.50760	.38793	.00000
200.500	600.180	-.22668	.10490	-.03170	-.03977	-.00864	.00032	.46065	.40661	.00000
	GRADIENT	.00000	.00000	.00000	.00000	.00000	.00000	.00000	.00000	.00000

RUN NO. 847/ 0 GRADIENT INTERVAL = -5.00/ 5.00

DLT-X	DLT-Z	CN	CA	CLM	CY	CYN	CBL	XCP/L	YCP/L	CPB
400.510	400.250	-.23317	.10460	-.03340	-.04234	-.00752	.00031	.45827	.43425	.00000
400.410	499.520	-.24566	.11406	-.02139	-.04222	-.00771	.00018	.49751	.43070	.00000
400.390	600.010	-.23796	.11343	-.02424	-.03981	-.00939	.00048	.48718	.39358	.00000
	GRADIENT	.00000	.00000	.00000	.00000	.00000	.00000	.00000	.00000	.00000

AEDC VA422(IA17) ORB AND ET SEPARATING(ET DATA) (ATR364) (24 JUL 75)

REFERENCE DATA

SREF = 2690.0000 SQ.FT. XMRP = 1360.1000 IN. XT
LREF = 1290.3000 IN. YMRP = .0000 IN. YT
BREF = 1290.3000 IN. ZMRP = 416.4000 IN. ZT
SCALE = .0100

PARAMETRIC DATA

DLT-Y = 60.000 ALPHA = -5.000
BETA = 3.000 DLTALF = -20.000
DLTBTA = .000 MACH = 7.980
AILRON = .000 ELEVON = .000
GRID = 18.000 PO = 370.000

RUN NO. 858/ 0 GRADIENT INTERVAL = -5.00/ 5.00

DLT-X	DLT-Z	CN	CA	CLM	CY	CYN	CBL	XCP/L	YCP/L	CPB
.295	800.540	-.50955	.14175	-.00728	-.05286	-.00428	.00035	.54836	.50178	.00000
.462	896.500	-.47351	.14403	-.02732	-.05268	-.00591	.00033	.51804	.47992	.00000
.380	999.590	-.47347	.14402	-.02711	-.05161	-.00548	.00038	.51833	.48438	.00000
	GRADIENT	.00000	.00000	.00000	.00000	.00000	.00000	.00000	.00000	.00000

RUN NO. 856/ 0 GRADIENT INTERVAL = -5.00/ 5.00

DLT-X	DLT-Z	CN	CA	CLM	CY	CYN	CBL	XCP/L	YCP/L	CPB
200.490	753.360	-.55479	.17558	.01657	-.05438	-.00341	.00088	.57921	.51448	.00000
200.140	799.680	-.58284	.20029	.03890	-.04955	-.00542	.00170	.60498	.48197	.00000
200.660	895.740	-.47781	.14222	-.02573	-.05021	-.00552	.00042	.52071	.48153	.00000
200.510	1000.200	-.47491	.14489	-.02707	-.05176	-.00589	.00040	.51852	.47887	.00000
	GRADIENT	.00000	.00000	.00000	.00000	.00000	.00000	.00000	.00000	.00000

AEDC VA422(IA17) ORB AND ET SEPARATING(ET DATA) (ATR384) (24 JUL 75)

REFERENCE DATA

SREF = 2690.0000 SQ.FT. XMRP = 1360.1000 IN. XT
LREF = 1290.3000 IN. YMRP = .0000 IN. YT
BREF = 1290.3000 IN. ZMRP = 416.4000 IN. ZT
SCALE = .0100

PARAMETRIC DATA

DLT-Y = 60.000 ALPHA = -5.000
BETA = 3.000 DLTALF = -20.000
DLTBTA = .000 MACH = 7.980
AILRON = .000 ELEVON = .000
GRID = 18.000 PO = 370.000

RUN NO. 855/ 0 GRADIENT INTERVAL = -5.00/ 5.00

DLT-X	DLT-Z	CN	CA	CLM	CY	CYN	CBL	XCP/L	YCP/L	CPB
400.470	751.760	-.55022	.17770	.01389	-.05431	-.00330	.00114	.57572	.51589	.00000
400.350	800.920	-.52151	.15894	.00088	-.04928	-.00644	.00051	.55950	.46704	.00000
400.430	900.410	-.48875	.14465	-.01849	-.05032	-.00526	.00037	.53191	.48531	.00000
400.330	1000.300	-.47356	.14538	-.02627	-.04977	-.00567	.00036	.51959	.47876	.00000
	GRADIENT	.00000	.00000	.00000	.00000	.00000	.00000	.00000	.00000	.00000

AEDC VA422(IA17) ORB AND ET SEPARATING(ET DATA) (ATR385) (24 JUL 75)

REFERENCE DATA

SREF = 2690.0000 SQ.FT. XMRP = 1360.1000 IN. XT
LREF = 1290.3000 IN. YMRP = .0000 IN. YT
BREF = 1290.3000 IN. ZMRP = 416.4000 IN. ZT
SCALE = .0100

PARAMETRIC DATA

DLT-Y = 60.000 ALPHA = -5.000
BETA = 3.000 DLTALF = .000
DLTBTA = 3.000 MACH = 7.980
AILRON = .000 ELEVON = .000
GRID = 18.000 PO = 300.000

RUN NO. 865/ 0 GRADIENT INTERVAL = -5.00/ 5.00

DLT-X	DLT-Z	CN	CA	CLM	CY	CYN	CBL	XCP/L	YCP/L	CPB
.489	19.669	-.10118	.08916	-.01151	-.07512	-.01952	.00082	.47887	.37684	.00000
.595	101.670	-.09431	.09046	-.00649	-.07273	-.01993	.00073	.51029	.36694	.00000
.561	201.810	-.07758	.08873	-.00906	-.07064	-.02178	.00065	.47678	.34297	.00000
.538	300.690	-.06781	.08559	-.01457	-.06954	-.02222	.00063	.40823	.33509	.00000
.502	400.100	-.06665	.08557	-.01563	-.07039	-.02227	.00067	.39454	.33726	.00000
.495	500.070	-.06698	.08604	-.01569	-.06925	-.02197	.00066	.39461	.33664	.00000
	GRADIENT	.00000	.00000	.00000	.00000	.00000	.00000	.00000	.00000	.00000

RUN NO. 868/ 0 GRADIENT INTERVAL = -5.00/ 5.00

DLT-X	DLT-Z	CN	CA	CLM	CY	CYN	CBL	XCP/L	YCP/L	CPB
200.520	22.768	-.11075	.09035	-.01751	-.07796	-.02048	.00089	.44792	.37477	.00000
200.480	97.990	-.09330	.09038	-.00727	-.07491	-.01976	.00076	.50391	.37406	.00000
200.490	198.480	-.07972	.08831	-.00891	-.07169	-.02106	.00073	.48030	.35313	.00000
200.470	298.490	-.07311	.08644	-.01123	-.07058	-.02241	.00058	.45101	.33648	.00000
200.510	399.830	-.08725	.08522	-.01545	-.06912	-.02212	.00064	.39788	.33473	.00000
200.490	500.090	-.08599	.08633	-.01548	-.06989	-.02197	.00068	.39442	.33867	.00000
	GRADIENT	.00000	.00000	.00000	00000	.00000	.00000	.00000	.00000	.00000

AEDC VA422(1A17) ORB AND ET SEPARATING(ET DATA) (ATR388) (24 JUL 75)

REFERENCE DATA

SREF = 2690.0000 SQ.FT. XMRP = 1360.1000 IN. XT
LREF = 1290.3000 IN. YMRP = .0000 IN. YT
BREF = 1290.3000 IN. ZMRP = 416.4000 IN. ZT
SCALE = .0100

PARAMETRIC DATA

DLT-Y = 60.000 ALPHA = -5.000
BETA = 3.000 DLTALF = -10.000
DLTBTA = 3.000 MACH = 7.980
AILRON = .000 ELEVON = .000
GRID = 18.000 PO = 300.000

RUN NO. 862/ 0 GRADIENT INTERVAL = -5.00/ 5.00

DLT-X	DLT-Z	CN	CA	CLM	CY	CYN	CBL	XCP/L	YCP/L	CPB
.505	403.300	-.27337	.12455	-.00864	-.08445	-.01727	.00099	.53626	.41548	.00000
.449	500.520	-.24377	.11038	-.02532	-.08504	-.01757	.00052	.48577	.41396	.00000
.253	601.430	-.22898	.10474	-.03430	-.08657	-.01840	.00069	.45369	.40983	.00000
	GRADIENT	.00000	.00000	.00000	.00000	.00000	.00000	.00000	.00000	.00000

RUN NO. 863/ 0 GRADIENT INTERVAL = -5.00/ 5.00

DLT-X	DLT-Z	CN	CA	CLM	CY	CYN	CBL	XCP/L	YCP/L	CPB
200.480	398.300	-.26004	.11272	-.01980	-.08812	-.01604	.00110	.50515	.43120	.00000
200.490	499.040	-.25726	.11834	-.01650	-.08460	-.01837	.00080	.51353	.40663	.00000
200.460	600.210	-.23333	.10351	-.03153	-.08382	-.01806	.00062	.46394	.40786	.00000
	GRADIENT	.00000	.00000	.00000	.00000	.00000	.00000	.00000	.00000	.00000

RUN NO. 864/ 0 GRADIENT INTERVAL = -5.00/ 5.00

DLT-X	DLT-Z	CN	CA	CLM	CY	CYN	CBL	XCP/L	YCP/L	CPB
400.490	400.870	-.24804	.10747	-.02875	-.08842	-.01531	.00102	.47737	.43737	.00000
400.360	500.310	-.25804	.11484	-.01834	-.08531	-.01719	.00087	.50867	.41755	.00000
400.540	600.040	-.24368	.11083	-.02470	-.08583	-.01750	.00056	.48753	.41556	.00000
	GRADIENT	.00000	.00000	.00000	.00000	.00000	.00000	.00000	.00000	.00000

AEDC VA422(IA17) ORB AND ET SEPARATING(ET DATA) (ATR368) (24 JUL 75)

REFERENCE DATA

SREF = 2690.0000 SQ.FT. XMRP = 1360.1000 IN. XT
LREF = 1290.3000 IN. YMRP = .0000 IN. YT
BREF = 1290.3000 IN. ZMRP = 416.4000 IN. ZT
SCALE = .0100

PARAMETRIC DATA

DLT-Y = 60.000 ALPHA = -5.000
BETA = 3.000 DLTALF = -20.000
DLTBTA = 3.000 MACH = 7.980
AILRON = .000 ELEVON = .000
GRID = 18.000 PO = 350.000

RUN NO. 859/ 0 GRADIENT INTERVAL = -5.00/ 5.00

DLT-X	DLT-Z	CN	CA	CLM	CY	CYN	CBL	XCP/L	YCP/L	CPB
200.420	753.190	-.58162	.18226	.02824	-.10835	-.01048	.00164	.59227	.49076	.00000
200.310	802.820	-.54931	.16894	.01443	-.10856	-.01092	.00071	.57670	.48807	.00000
200.410	900.340	-.48578	.14662	-.02250	-.10957	-.01058	.00064	.52599	.49086	.00000
200.540	1000.300	-.48618	.14839	-.02252	-.10915	-.01056	.00067	.52598	.49076	.00000
	GRADIENT	.00000	.00000	.00000	.00000	.00000	.00000	.00000	.00000	.00000

AEDC VA422(IA17) ORB AND ET SEPARATING(ET DATA) (ATR369) (24 JUL 75)

REFERENCE DATA

SREF = 2690.0000 SQ.FT. XMRP = 1360.1000 IN. XT
LREF = 1290.3000 IN. YMRP = .0000 IN. YT
BREF = 1290.3000 IN. ZMRP = 416.4000 IN. ZT
SCALE = .0100

PARAMETRIC DATA

DLT-Y = 60.000 ALPHA = -5.000
BETA = 3.000 DLTALF = -20.000
DLTBTA = 3.000 MACH = 7.980
AILRON = .000 ELEVON = .000
GRID = 18.000 PO = 300.000

RUN NO. 861/ 0 GRADIENT INTERVAL = -5.00/ 5.00

DLT-X	DLT-Z	CN	CA	CLM	CY	CYN	CBL	XCP/L	YCP/L	CPB
.453	803.550	-.52015	.14291	-.00503	-.10879	-.01172	.00047	.55158	.48305	.00000
.473	901.030	-.48734	.14624	-.02328	-.11063	-.01075	.00068	.52497	.49043	.00000
.456	1000.400	-.48853	.14692	-.02279	-.10945	-.01023	.00066	.52575	.49303	.00000
	GRADIENT	.00000	.00000	.00000	.00000	.00000	.00000	.00000	.00000	.00000

RUN NO. 860/ 0 GRADIENT INTERVAL = -5.00/ 5.00

DLT-X	DLT-Z	CN	CA	CLM	CY	CYN	CBL	XCP/L	YCP/L	CPB
400.410	747.080	-.57342	.17796	.02238	-.11079	-.00957	.00200	.58560	.49797	.00000
399.710	799.460	-.60549	.20426	.04604	-.10832	-.01132	.00185	.61146	.48530	.00000
400.490	898.290	-.50411	.14633	-.01384	-.11020	-.01089	.00058	.53916	.48932	.00000
400.340	1000.400	-.48774	.14669	-.02288	-.11064	-.01103	.00062	.52558	.48866	.00000
	GRADIENT	.00000	.00000	.00000	.00000	.00000	.00000	.00000	.00000	.00000

ORIGINAL PAGE IS OF POOR QUALITY

AEDC VA422(IA17) ORB AND ET SEPARATING(ET DATA) (ATR370) (24 JUL 75)

REFERENCE DATA

SREF = 2690.0000 SQ.FT. XMRP = 1360.1000 IN. XT
LREF = 1290.3000 IN. YMRP = .0000 IN. YT
BREF = 1290.3000 IN. ZMRP = 416.4000 IN. ZT
SCALE = .0100

PARAMETRIC DATA

DLT-Y = 60.000 ALPHA = -10.000
BETA = 3.000 DLTALF = .000
DLTBTA = .000 MACH = 7.980
AILRON = .000 ELEVON = .000
GRID = 8.000 PO = 300.000

RUN NO. 925/ 0 GRADIENT INTERVAL = -5.00/ 5.00

DLT-X	DLT-Z	CN	CA	CLM	CY	CYN	CBL	XCP/L	YCP/L	CPB
.472	29.200	-.16007	.08989	-.03068	-.04180	-.01025	.00046	.42444	.38705	.00000
.515	98.830	-.14822	.09193	-.02552	-.04172	-.00974	.00030	.43804	.39523	.00000
.473	197.940	-.14387	.09260	-.02438	-.04091	-.00991	.00031	.43997	.38914	.00000
.497	298.950	-.14712	.09991	-.01985	-.03990	-.01102	.00045	.46406	.36532	.00000
.453	400.140	-.13513	.09187	-.02879	-.03869	-.01119	.00031	.40952	.35622	.00000
.614	500.120	-.13348	.09131	-.02919	-.04004	-.01111	.00033	.40555	.36456	.00000
	GRADIENT	.00000	.00000	.00000	.00000	.00000	.00000	.00000	.00000	.00000

RUN NO. 924/ 0 GRADIENT INTERVAL = -5.00/ 5.00

DLT-X	DLT-Z	CN	CA	CLM	CY	CYN	CBL	XCP/L	YCP/L	CPB
200.420	32.717	-.15671	.09104	-.03565	-.04216	-.01082	.00045	.39941	.37898	.00000
200.510	102.250	-.14682	.09242	-.02848	-.04137	-.00991	.00029	.42284	.39096	.00000
200.520	201.210	-.14164	.09009	-.02953	-.04049	-.01022	.00035	.41270	.38210	.00000
200.380	300.340	-.14916	.09508	-.02203	-.04108	-.01033	.00035	.45513	.38269	.00000
200.520	400.050	-.14433	.09756	-.02258	-.03906	-.01059	.00040	.44902	.36898	.00000
200.530	500.150	-.13416	.09109	-.02929	-.03809	-.01089	.00032	.40581	.35862	.00000
	GRADIENT	.00000	.00000	.00000	.00000	.00000	.00000	.00000	.00000	.00000

AEDC VA422(IA17) ORB AND ET SEPARATING(ET DATA) (ATR371) (24 JUL 75)

REFERENCE DATA

SREF = 2690.0000 SQ.FT. XMRP = 1380.1000 IN. XT
LREF = 1290.3000 IN. YMRP = .0000 IN. YT
BREF = 1290.3000 IN. ZMRP = 416.4000 IN. ZT
SCALE = .0100

PARAMETRIC DATA

DLT-Y = 60.000 ALPHA = -10.000
BETA = 0.000 DLTALF = -10.000
DLTGTA = .000 MACH = 7.980
AILRON = .000 ELEVON = .000
GRID = 8.000 PO = 300.000

RUN NO. 933/ 0 GRADIENT INTERVAL = -5.00/ 5.00

DLT-X	DLT-Z	CN	CA	CLM	CY	CYN	CBL	XCP/L	YCP/L	CPB
.317	402.810	-.35160	.12451	-.03024	-.05000	-.00680	.00049	.49825	.46327	.00000
.320	499.570	-.39923	.15982	.00424	-.05009	-.00818	.00057	.56576	.44421	.00000
.400	597.420	-.35602	.12652	-.02140	-.04735	-.00860	.00056	.51634	.43151	.00000
.509	700.130	-.33665	.11842	-.03318	-.04715	-.00820	.00039	.48949	.43691	.00000
.446	800.060	-.33572	.11915	-.03287	-.04765	-.00794	.00040	.48994	.44187	.00000
	GRADIENT	.00000	.00000	.00000	.00000	.00000	.00000	.00000	.00000	.00000

RUN NO. 932/ 0 GRADIENT INTERVAL = -5.00/ 5.00

DLT-X	DLT-Z	CN	CA	CLM	CY	CYN	CBL	XCP/L	YCP/L	CPB
200.470	401.270	-.32474	.11076	-.04747	-.04795	-.00762	.00037	.45621	.44733	.00000
200.430	500.720	-.35413	.12307	-.02738	-.05101	-.00675	.00026	.50433	.46588	.00000
200.320	600.340	-.36917	.13856	-.01291	-.04465	-.00959	.00061	.53390	.40836	.00000
200.480	700.180	-.34867	.12199	-.02596	-.04712	-.00811	.00040	.50633	.43809	.00000
200.550	800.150	-.33520	.11895	-.03330	-.04638	-.00809	.00040	.48894	.43652	.00000
	GRADIENT	.00000	.00000	.00000	.00000	.00000	.00000	.00000	.00000	.00000

RUN NO. 931/ 0 GRADIENT INTERVAL = -5.00/ 5.00

DLT-X	DLT-Z	CN	CA	CLM	CY	CYN	CBL	XCP/L	YCP/L	CPB
400.370	400.210	-.30750	.10453	-.05859	-.04709	-.00812	.00043	.42524	.43780	.00000
400.440	499.930	-.33905	.11474	-.03826	-.04966	-.00677	.00041	.47951	.46310	.00000
400.350	600.150	-.36202	.12884	-.01991	-.05134	-.00678	.00017	.51991	.46608	.00000
400.360	700.100	-.36311	.13298	-.01655	-.04561	-.00946	.00059	.52650	.41336	.00000
400.500	800.200	-.34180	.11796	-.02962	-.04771	-.00821	.00038	.49780	.43815	.00000
	GRADIENT	.00000	.00000	.00000	.00000	.00000	.00000	.00000	.00000	.00000

AEDC VA422(IA17) ORB AND ET SEPARATING(ET DATA) (ATR372) (24 JUL 75)

REFERENCE DATA

SREF = 2690.0000 SQ.FT. XMRP = 1360.1000 IN. XT
LREF = 1290.3000 IN. YMRP = .0000 IN. YT
BREF = 1290.3000 IN. ZMRP = 416.4000 IN. ZT
SCALE = .0100

PARAMETRIC DATA

DLT-Y = 60.000 ALPHA = -5.000
BETA = .000 DLTALF = .000
DLTBTA = .000 MACH = 7.980
AILRON = .000 ELEVON = .000
GRID = 19.000 PO = 300.000

RUN NO. 941/ 0 GRADIENT INTERVAL = -5.00/ 5.00

DLT-X	DLT-Z	CN	CA	CLM	CY	CYN	CBL	XCP/L	YCP/L	CPB
.532	18.043	-.09415	.08759	-.01355	-.00046	-.00049	.00016	.45777	.00000	.00000
.535	100.410	-.08629	.08696	-.01004	-.00298	-.00045	.00007	.47708	.00000	.00000
.554	198.920	-.07438	.08759	-.01024	-.00283	-.00054	.00001	.46220	.00000	.00000
.536	298.660	-.06564	.08235	-.01585	-.00195	-.00077	.00010	.38960	.00000	.00000
.505	399.650	-.06474	.08286	-.01705	-.00193	-.00114	.00008	.37435	.00000	.00000
.491	500.120	-.06543	.08326	-.01738	-.00142	-.00085	.00008	.37272	.00000	.00000
	GRADIENT	.00000	.00000	.00000	.00000	.00000	.00000	.00000	.00000	.00000

RUN NO. 940/ 0 GRADIENT INTERVAL = -5.00/ 5.00

DLT-X	DLT-Z	CN	CA	CLM	CY	CYN	CBL	XCP/L	YCP/L	CPB
200.480	21.756	-.09854	.08683	-.02003	.00114	-.00171	.00013	.41630	.00000	.00000
200.530	101.640	-.08675	.08832	-.01019	-.00333	-.00049	.00003	.47628	.00000	.00000
200.420	201.620	-.07650	.08503	-.01188	-.00251	-.00049	.00006	.44983	.00000	.00000
200.550	300.260	-.07211	.08717	-.01199	-.00165	-.00098	.00016	.44218	.00000	.00000
200.520	400.120	-.06450	.08244	-.01712	-.00163	-.00090	.00007	.37297	.00000	.00000
200.480	500.070	-.06514	.08319	-.01738	-.00062	-.00054	.00007	.37190	.00000	.00000
	GRADIENT	.00000	.00000	.00000	.00000	.00000	.00000	.00000	.00000	.00000

AEDC VA422(IA17) ORB AND ET SEPARATING(ET DATA) (ATR373) (24 JUL 75)

REFERENCE DATA

SREF = 2690.0000 SQ.FT. XMRP = 1360.1000 IN. XT
LREF = 1290.3000 IN. YMRP = .0000 IN. YT
BREF = 1290.3000 IN. ZMRP = 416.4000 IN. ZT
SCALE = .0100

PARAMETRIC DATA

DLT-Y = 60.000 ALPHA = -5.000
BETA = .000 DLTALF = -10.000
DLTBTA = .000 MACH = 7.980
AILRON = .000 ELEVON = .000
GRID = 19.000 PO = 300.000

RUN NO. 949/ 0 GRADIENT INTERVAL = -5.00/ 5.00

DLT-X	DLT-Z	CN	CA	CLM	CY	CYN	CBL	XCP/L	YCP/L	CPB
.453	402.230	-.25694	.12204	-.01403	.00038	-.00054	.00022	.52018	.00000	.00000
.492	497.680	-.23230	.10754	-.02888	.00030	-.00037	.00044	.47154	.00000	.00000
.431	599.980	-.21681	.09951	-.03817	.00009	-.00035	.00027	.43522	.00000	.00000
	GRADIENT	.00000	.00000	.00000	.00000	.00000	.00000	.00000	.00000	.00000

AEDC VA422(1A17) ORB AND ET SEPARATING(ET DATA) (ATR373) (24 JUL 75)

REFERENCE DATA

SREF = 2690.0000 SQ.FT. XMRP = 1360.1000 IN. XT
LREF = 1290.3000 IN. YMRP = .0000 IN. YT
BREF = 1290.3000 IN. ZMRP = 416.4000 IN. ZT
SCALE = .0100

PARAMETRIC DATA

DLT-Y = 60.000 ALPHA = -5.000
BETA = .000 DLTALF = -20.000
DLTBTA = .000 MACH = 7.980
AILRON = .000 ELEVON = .000
GRID = 19.000 PO = 300.000

RUN NO. 948/ 0 GRADIENT INTERVAL = -5.00/ 5.00

DLT-X	DLT-Z	CN	CA	CLM	CY	CYN	CBL	XCP/L	YCP/L	CPB
200.460	401.350	-.24218	.10867	-.02502	-.00111	-.00027	-.00002	.48615	.00000	.00000
200.410	500.270	-.24346	.11634	-.02120	.00043	-.00089	.00047	.49751	.00000	.00000
200.450	600.170	-.22100	.10055	-.03542	-.00021	.00009	.00030	.44637	.00000	.00000
	GRADIENT	.00000	.00000	.00000	.00000	.00000	.00000	.00000	.00000	.00000

RUN NO. 947/ 0 GRADIENT INTERVAL = -5.00/ 5.00

DLT-X	DLT-Z	CN	CA	CLM	CY	CYN	CBL	XCP/L	YCP/L	CPB
400.510	400.260	-.23278	.10240	-.03335	.00137	.00009	.00005	.45825	.00000	.00000
400.380	499.850	-.24271	.11226	-.02280	-.00176	-.00004	.00005	.49272	.00000	.00000
400.400	600.140	-.23204	.10772	-.02811	.00206	-.00026	.00042	.47372	.00000	.00000
	GRADIENT	.00000	.00000	.00000	.00000	.00000	.00000	.00000	.00000	.00000

AEDC VA422(1A17) ORB AND ET SEPARATING(ET DATA) (ATR375) (24 JUL 75)

REFERENCE DATA

SREF = 2690.0000 SQ.FT. XMRP = 1360.1000 IN. XT
LREF = 1290.3000 IN. YMRP = .0000 IN. YT
BREF = 1290.3000 IN. ZMRP = 416.4000 IN. ZT
SCALE = .0100

PARAMETRIC DATA

DLT-Y = 60.000 ALPHA = -5.000
BETA = .000 DLTALF = -20.000
DLTBTA = .000 MACH = 7.980
AILRON = .000 ELEVON = .000
GRID = 19.000 PO = 300.000

RUN NO. 958/ 0 GRADIENT INTERVAL = -5.00/ 5.00

DLT-X	DLT-Z	CN	CA	CLM	CY	CYN	CBL	XCP/L	YCP/L	CPB
.413	800.100	-.50073	.14200	-.00994	.00499	.00162	.00068	.54447	.00000	.00000
.358	897.070	-.46822	.14233	-.02907	.00872	-.00110	.00060	.51479	.64683	.00000
.427	999.770	-.46578	.14157	-.02920	.01036	-.00089	.00061	.51454	.61834	.00000
	GRADIENT	.00000	.00000	.00000	.00000	.00000	.00000	.00000	.00000	.00000

RUN NO. 956/ 0 GRADIENT INTERVAL = -5.00/ 5.00

DLT-X	DLT-Z	CN	CA	CLM	CY	CYN	CBL	XCP/L	YCP/L	CPB
200.430	752.650	-.55259	.17728	.01775	.00293	.00141	.00090	.58079	.00000	.00000
200.250	800.340	-.58044	.20315	.04075	.00794	-.00008	.00143	.60739	.00000	.00000
200.610	896.340	-.46930	.14155	-.02796	.00868	-.00108	.00068	.51671	.64559	.00000
200.320	1000.200	-.46686	.14211	-.02917	.00957	-.00102	.00063	.51469	.63288	.00000
	GRADIENT	.00000	.00000	.00000	.00000	.00000	.00000	.00000	.00000	.00000

AEDC VA422(IA17) ORB AND ET SEPARATING(ET DATA) (ATR375) (24 JUL 75)

REFERENCE DATA

SREF = 2690.0000 SQ.FT. XMRP = 1360.1000 IN. XT
LREF = 1290.3000 IN. YMRP = .0000 IN. YT
BREF = 1290.3000 IN. ZMRP = 416.4000 IN. ZT
SCALE = .0100

PARAMETRIC DATA

DLT-Y = 60.000 ALPHA = -5.000
BETA = .000 DLTALF = -20.000
DLTBTA = .000 MACH = 7.980
AILRON = .000 ELEVON = .000
GRID = 19.000 PO = 300.000

RUN NO. 955/ 0 GRADIENT INTERVAL = -5.00/ 5.00

DLT-X	DLT-Z	CN	CA	CLM	CY	CYN	CBL	XCP/L	YCP/L	CPB
400.390	751.520	-.54843	.17914	.01476	.00546	.00111	.00064	.57714	.00000	.00000
400.360	800.860	-.51969	.16431	.00249	.00786	-.00111	.00081	.56169	.00000	.00000
400.350	900.300	-.47938	.14259	-.02221	.00720	-.00055	.00059	.52598	.00000	.00000
400.330	1000.200	-.46634	.14171	-.02940	.01099	-.00098	.00062	.51430	.62075	.00000
	GRADIENT	.00000	.00000	.00000	.00000	.00000	.00000	.00000	.00000	.00000

AEDC VA422(IA17) ORB AND ET SEPARATING(ET DATA) (ATR376) (24 JUL 75)

REFERENCE DATA

SREF = 2690.0000 SQ.FT. XMRP = 1360.1000 IN. XT
LREF = 1290.3000 IN. YMRP = .0000 IN. YT
BREF = 1290.3000 IN. ZMRP = 416.4000 IN. ZT
SCALE = .0100

PARAMETRIC DATA

DLT-Y = 60.000 ALPHA = -5.000
BETA = .000 DLTALF = .000
DLTBTA = 3.000 MACH = 7.980
AILRON = .000 ELEVON = .000
GRID = 19.000 PO = 300.000

RUN NO. 965/ 0 GRADIENT INTERVAL = -5.00/ 5.00

DLT-X	DLT-Z	CN	CA	CLM	CY	CYN	CBL	XCP/L	YCP/L	CPB
.572	19.690	-.09789	.08629	-.01377	-.03774	-.01088	.00044	.46007	.35691	.00000
.469	101.470	-.09084	.08732	-.00937	-.03825	-.01078	.00036	.48632	.36154	.00000
.527	201.830	-.07733	.08812	-.00973	-.03608	-.01185	.00036	.47048	.32896	.00000
.536	300.560	-.06750	.08335	-.01584	-.03509	-.01198	.00033	.39444	.31988	.00000
.457	400.170	-.06652	.08332	-.01704	-.03641	-.01241	.00036	.37942	.32028	.00000
.664	496.840	-.06644	.08359	-.01718	-.03658	-.01236	.00035	.37770	.32233	.00000
	GRADIENT	.00000	.00000	.00000	.00000	.00000	.00000	.00000	.00000	.00000

RUN NO. 966/ 0 GRADIENT INTERVAL = -5.00/ 5.00

DLT-X	DLT-Z	CN	CA	CLM	CY	CYN	CBL	XCP/L	YCP/L	CPB
200.530	22.407	-.10382	.08641	-.02067	-.03839	-.01110	.00056	.41926	.35634	.00000
200.570	98.031	-.08894	.08752	-.01005	-.03885	-.01106	.00027	.47939	.35939	.00000
200.480	198.490	-.07896	.08587	-.01060	-.03759	-.01137	.00036	.46454	.34701	.00000
200.510	298.490	-.07376	.08803	-.01134	-.03610	-.01205	.00035	.45093	.32511	.00000
200.530	399.900	-.06673	.08334	-.01678	-.03569	-.01242	.00035	.38271	.31521	.00000
200.440	500.070	-.06614	.08301	-.01704	-.03571	-.01231	.00035	.37836	.31743	.00000
	GRADIENT	.00000	.00000	.00000	.00000	.00000	.00000	.00000	.00000	.00000

AEDC VA422(IA17) ORB AND ET SEPARATING(ET DATA) (ATR377) (24 JUL 75)

REFERENCE DATA

SREF = 2690.0000 SQ.FT. XMRP = 1360.1000 IN. XT
LREF = 1290.3000 IN. YMRP = .0000 IN. YT
BREF = 1290.3000 IN. ZMRP = 416.4000 IN. ZT
SCALE = .0100

PARAMETRIC DATA

DLT-Y = 60.000 ALPHA = -5.000
BETA = .000 DLTALF = -10.000
DLTBTA = 3.000 MACH = 7.980
AILRON = .000 ELEVON = .000
GRID = 19.000 PO = 300.000

RUN NO. 962/ 0 GRADIENT INTERVAL = -5.00/ 5.00

DLT-X	DLT-Z	CN	CA	CLM	CY	CYN	CBL	XCP/L	YCP/L	CPB
.502	403.460	-.26898	.12565	-.00894	-.04114	-.00985	.00047	.53512	.39104	.00000
.370	500.440	-.23826	.11147	-.02684	-.04050	-.00957	.00044	.47962	.39322	.00000
-.078	601.430	-.22294	.10285	-.03633	-.04205	-.00955	.00040	.44450	.39964	.00000
	GRADIENT	.00000	.00000	.00000	.00000	.00000	.00000	.00000	.00000	.00000

RUN NO. 963/ 0 GRADIENT INTERVAL = -5.00/ 5.00

DLT-X	DLT-Z	CN	CA	CLM	CY	CYN	CBL	XCP/L	YCP/L	CPB
200.510	398.080	-.24748	.10844	-.02495	-.04308	-.00791	.00030	.48790	.43007	.00000
200.450	499.090	-.24832	.11848	-.01938	-.04097	-.01059	.00054	.50382	.37782	.00000
200.520	600.270	-.22776	.10377	-.03323	-.04069	-.00922	.00038	.45640	.40013	.00000
	GRADIENT	.00000	.00000	.00000	.00000	.00000	.00000	.00000	.00000	.00000

RUN NO. 964/ 0 GRADIENT INTERVAL = -5.00/ 5.00

DLT-X	DLT-Z	CN	CA	CLM	CY	CYN	CBL	XCP/L	YCP/L	CPB
400.480	400.870	-.23590	.10220	-.03389	-.04341	-.00830	.00037	.45799	.42473	.00000
400.520	500.530	-.24752	.11161	-.02222	-.04310	-.00834	.00020	.49562	.42311	.00000
400.330	599.980	-.23775	.11149	-.02592	-.03935	-.00923	.00046	.48219	.39440	.00000
	GRADIENT	.00000	.00000	.00000	.00000	.00000	.00000	.00000	.00000	.00000

ORIGINAL PAGE IS OF POOR QUALITY

AEDC VA422(IA17) ORB AND ET SEPARATING(ET DATA) (ATR379) (24 JUL 75)

REFERENCE DATA

SREF = 2690.0000 SQ.FT. XMRP = 1360.1000 IN. XT
LREF = 1290.3000 IN. YMRP = .0000 IN. YT
BREF = 1290.3000 IN. ZMRP = 416.4000 IN. ZT
SCALE = .0100

PARAMETRIC DATA

DLT-Y = 60.000 ALPHA = -5.000
BETA = .000 DLTALF = -20.000
DLTBTA = 3.000 MACH = 7.980
AILRON = .000 ELEVON = .000
GRID = 19.000 PO = 300.000

RUN NO. 961/ 0 GRADIENT INTERVAL = -5.00/ 5.00

DLT-X	DLT-Z	CN	CA	CLM	CY	CYN	CBL	XCP/L	YCP/L	CPB
.485	803.780	-.51119	.13992	-.00743	-.05040	-.00591	.00036	.54818	.47640	.00000
.512	900.920	-.47378	.14297	-.02787	-.05063	-.00599	.00042	.51724	.47565	.00000
.444	1000.300	-.47381	.14257	-.02762	-.04930	-.00602	.00043	.51760	.47310	.00000
	GRADIENT	.00000	.00000	.00000	.00000	.00000	.00000	.00000	.00000	.00000

RUN NO. 959/ 0 GRADIENT INTERVAL = -5.00/ 5.00

DLT-X	DLT-Z	CN	CA	CLM	CY	CYN	CBL	XCP/L	YCP/L	CPB
200.440	752.410	-.55777	.17386	.01774	-.05192	-.00517	.00106	.58057	.48875	.00000
200.420	802.560	-.53701	.16575	.00828	-.05027	-.00616	.00078	.56911	.47268	.00000
200.430	900.410	-.47324	.14121	-.02764	-.04991	-.00606	.00039	.51754	.47345	.00000
200.400	1000.300	-.47340	.14266	-.02763	-.04984	-.00582	.00043	.51756	.47677	.00000
	GRADIENT	.00000	.00000	.00000	.00000	.00000	.00000	.00000	.00000	.00000

RUN NO. 960/ 0 GRADIENT INTERVAL = -5.00/ 5.00

DLT-X	DLT-Z	CN	CA	CLM	CY	CYN	CBL	XCP/L	YCP/L	CPB
400.440	747.950	-.55140	.17063	.01140	-.05257	-.00442	.00119	.57278	.49962	.00000
400.170	800.350	-.57343	.19667	.03270	-.04902	-.00632	.00148	.59818	.46827	.00000
400.490	898.450	-.48822	.14182	-.01928	-.05086	-.00594	.00041	.53075	.47677	.00000
400.400	1000.300	-.47232	.14229	-.02782	-.04877	-.00593	.00041	.51719	.47333	.00000
	GRADIENT	.00000	.00000	.00000	.00000	.00000	.00000	.00000	.00000	.00000

AEDC VA422(IA17) ORB AND ET SEPARATING(ET DATA) (ATR380) (24 JUL 75)

REFERENCE DATA

SREF = 2690.0000 SQ.FT. XMRP = 1360.1000 IN. XT
LREF = 1290.3000 IN. YMRP = .0000 IN. YT
BREF = 1290.3000 IN. ZMRP = 416.4000 IN. ZT
SCALE = .0100

PARAMETRIC DATA

DLT-Y = 60.000 ALPHA = 5.000
BETA = .000 DLTALF = .000
DLTBTA = .000 MACH = 7.980
AILRON = .000 ELEVON = .000
GRID = 24.000 PO = 300.000

RUN NO. 971/ 0 GRADIENT INTERVAL = -5.00/ 5.00

DLT-X	DLT-Z	CN	CA	CLM	CY	CYN	CBL	XCP/L	YCP/L	CPB
.537	17.726	.01900	.08271	.02719	-.00643	-.00008	.00006	-.44153	.54969	.00000
.567	101.640	.02143	.08291	.02697	-.00783	-.00065	.00011	-.32099	.50054	.00000
.655	201.170	.04163	.07770	.02217	-.00376	-.00083	.00015	.18629	.00000	.00000
.580	300.390	.04948	.07632	.01904	-.00446	-.00144	.00011	.28947	.00000	.00000
.688	398.990	.05066	.07650	.01931	-.00458	-.00140	.00010	.29204	.00000	.00000
.588	498.460	.05013	.07798	.01922	-.00487	-.00148	.00011	.29053	.00000	.00000
	GRADIENT	.00000	.00000	.00000	.00000	.00000	.00000	.00000	.00000	.00000

RUN NO. 970/ 0 GRADIENT INTERVAL = -5.00/ 5.00

DLT-X	DLT-Z	CN	CA	CLM	CY	CYN	CBL	XCP/L	YCP/L	CPB
200.580	19.533	.01541	.08215	.01782	-.00906	-.00173	.00019	-.24965	.42468	.00000
200.510	99.540	.01685	.08463	.02939	-.00808	-.00028	.00008	-.66040	.53435	.00000
200.550	200.320	.04093	.07722	.02333	-.00394	-.00136	.00016	.16018	.00000	.00000
200.580	301.870	.04984	.07622	.01910	-.00349	-.00088	.00009	.29063	.00000	.00000
200.580	400.710	.04975	.07660	.01925	-.00419	-.00142	.00010	.28805	.00000	.00000
200.630	499.950	.05065	.07659	.01930	-.00329	-.00114	.00010	.29219	.00000	.00000
	GRADIENT	.00000	.00000	.00000	.00000	.00000	.00000	.00000	.00000	.00000

AEDC VA422(IA17) ORB AND ET SEPARATING(ET DATA) (ATR381) (24 JUL 75)

REFERENCE DATA

SREF = 2690.0000 SQ.FT. XMRP = 1360.1000 IN. XT
LREF = 1290.3000 IN. YMRP = .0000 IN. YT
BREF = 1290.3000 IN. ZMRP = 416.4000 IN. ZT
SCALE = .0100

PARAMETRIC DATA

DLT-Y = 60.000 ALPHA = 5.000
BETA = .000 DLTALF = -10.000
DLTBTA = .000 MACH = 7.980
AILRON = .000 ELEVON = .000
GRID = 24.000 PO = 300.000

RUN NO. 979/ 0 GRADIENT INTERVAL = -5.00/ 5.00

DLT-X	DLT-Z	CN	CA	CLM	CY	CYN	CBL	XCP/L	YCP/L	CPB
.502	401.000	-.08873	.08448	-.01170	-.00128	-.00005	.00005	.43938	.00000	.00000
.494	498.520	-.08069	.08380	-.01605	-.00196	-.00054	-.00003	.37354	.00000	.00000
.501	597.690	-.08124	.08505	-.01612	-.00238	-.00085	.00000	.37442	.00000	.00000
	GRADIENT	.00000	.00000	.00000	.00000	.00000	.00000	.00000	.00000	.00000

AEDC VA422(IA17) ORB AND ET SEPARATING(ET DATA) (ATR381) (24 JUL 75)

REFERENCE DATA

SREF = 2690.0000 SQ.FT. XMRP = 1360.1000 IN. XT
LREF = 1290.3000 IN. YMRP = .0000 IN. YT
BREF = 1290.3000 IN. ZMRP = 416.4000 IN. ZT
SCALE = .0100

PARAMETRIC DATA

DLT-Y = 60.000 ALPHA = 5.000
BETA = .000 DLTALF = -10.000
DLTBTA = .000 MACH = 7.980
AILRON = .000 ELEVON = .000
GRID = 24.000 PO = 300.000

RUN NO. 978/ 0 GRADIENT INTERVAL = -5.00/ 5.00

DLT-X	DLT-Z	CN	CA	CLM	CY	CYN	CBL	XCP/L	YCP/L	CPB
200.400	402.640	-.07701	.08905	-.00743	-.00205	-.00030	.00002	.49094	.00000	.00000
200.520	501.260	-.06150	.08464	-.01637	-.00257	-.00071	-.00000	.37243	.00000	.00000
200.430	600.140	-.06158	.08545	-.01644	-.00123	-.00062	-.00004	.37184	.00000	.00000
	GRADIENT	.00000	.00000	.00000	.00000	.00000	.00000	.00000	.00000	.00000

RUN NO. 977/ 0 GRADIENT INTERVAL = -5.00/ 5.00

DLT-X	DLT-Z	CN	CA	CLM	CY	CYN	CBL	XCP/L	YCP/L	CPB
400.470	400.120	-.09148	.10046	.00189	-.00147	-.00060	.00014	.57279	.00000	.00000
400.560	498.320	-.06134	.08396	-.01625	-.00260	-.00070	.00000	.37328	.00000	.00000
400.550	599.850	-.06186	.08546	-.01628	-.00180	-.00078	.00001	.37449	.00000	.00000
	GRADIENT	.00000	.00000	.00000	.00000	.00000	.00000	.00000	.00000	.00000

AEDC VA422(IA17) ORB AND ET SEPARATING(ET DATA) (ATR383) (24 JUL 75)

REFERENCE DATA

SREF = 2690.0000 SQ.FT. XMRP = 1360.1000 IN. XT
LREF = 1290.3000 IN. YMRP = .0000 IN. YT
BREF = 1290.3000 IN. ZMRP = 416.4000 IN. ZT
SCALE = .0100

PARAMETRIC DATA

DLT-Y = 60.000 ALPHA = 5.000
BETA = .000 DLTALF = -20.000
DLTBTA = .000 MACH = 7.980
AILRON = .000 ELEVON = .000
GRID = 24.000 PO = 300.000

RUN NO. 988/ 0 GRADIENT INTERVAL = -5.00/ 5.00

DLT-X	DLT-Z	CN	CA	CLM	CY	CYN	CBL	XCP/L	YCP/L	CPB
.402	800.010	-.21112	.09802	-.03780	.00147	-.00023	.00024	.43391	.00000	.00000
.371	899.580	-.21199	.09816	-.03785	-.00015	-.00029	.00025	.43425	.00000	.00000
.454	1000.200	-.21257	.09837	-.03785	-.00074	-.00049	.00025	.43393	.00000	.00000
	GRADIENT	.00000	.00000	.00000	.00000	.00000	.00000	.00000	.00000	.00000

RUN NO. 989/ 0 GRADIENT INTERVAL = -5.00/ 5.00

DLT-X	DLT-Z	CN	CA	CLM	CY	CYN	CBL	XCP/L	YCP/L	CPB
200.370	750.370	-.21228	.10240	-.03803	-.00101	-.00024	.00022	.43319	.00000	.00000
200.420	800.200	-.21263	.10270	-.03798	-.00069	-.00043	.00022	.43354	.00000	.00000
200.400	900.300	-.21211	.10289	-.03789	-.00024	-.00042	.00021	.43353	.00000	.00000
200.480	1000.300	-.21189	.10390	-.03825	-.00124	-.00071	.00022	.43222	.00000	.00000
	GRADIENT	.00000	.00000	.00000	.00000	.00000	.00000	.00000	.00000	.00000

AEDC VA422(IA17) ORB AND ET SEPARATING(ET DATA) (ATR383) (24 JUL 75)

REFERENCE DATA

SREF = 2690.0000 SQ.FT. XMRP = 1360.1000 IN. XT
LREF = 1290.3000 IN. YMRP = .0000 IN. YT
BREF = 1290.3000 IN. ZMRP = 416.4000 IN. ZT
SCALE = .0100

PARAMETRIC DATA

DLT-Y = 60.000 ALPHA = 5.000
BETA = .000 DLTALF = -20.000
DLTBTA = .000 MACH = 7.980
AILRON = .000 ELEVON = .000
GRID = 24.000 PO = 300.000

RUN NO. 985/ 0 GRADIENT INTERVAL = -5.00/ 5.00

DLT-X	DLT-Z	CN	CA	CLM	CY	CYN	CBL	XCP/L	YCP/L	CPB
400.450	750.290	-.21088	.10163	-.03814	-.00023	-.00047	.00022	.43199	.00000	.00000
400.540	800.240	-.21192	.10247	-.03790	-.00104	-.00060	.00019	.43339	.00000	.00000
400.450	900.280	-.21324	.10259	-.03765	-.00130	-.00041	.00021	.43500	.00000	.00000
400.530	1000.200	-.21157	.10264	-.03817	-.00014	-.00016	.00022	.43230	.00000	.00000
	GRADIENT	.00000	.00000	.00000	.00000	.00000	.00000	.00000	.00000	.00000

AEDC VA422(IA17) ORB AND ET SEPARATING(ET DATA) (ATR384) (24 JUL 75)

REFERENCE DATA

SREF = 2690.0000 SQ.FT. XMRP = 1360.1000 IN. XT
LREF = 1290.3000 IN. YMRP = .0000 IN. YT
BREF = 1290.3000 IN. ZMRP = 416.4000 IN. ZT
SCALE = .0100

PARAMETRIC DATA

DLT-Y = 60.000 ALPHA = 5.000
BETA = .000 DLTALF = .000
DLTBTA = 3.000 MACH = 7.980
AILRON = .000 ELEVON = .000
GRID = 24.000 PO = 300.000

RUN NO. 995/ 0 GRADIENT INTERVAL = -5.00/ 5.00

DLT-X	DLT-Z	CN	CA	CLM	CY	CYN	CBL	XCP/L	YCP/L	CPB
.516	18.634	.01784	.08138	.02667	-.03921	-.01219	.00051	-.48616	.34103	.00000
.606	98.613	.02182	.07995	.02598	-.03699	-.01234	.00056	-.27340	.32532	.00000
.533	199.430	.04244	.07724	.02248	-.03685	-.01355	.00035	.18827	.30149	.00000
.579	301.200	.04947	.07628	.01900	-.03944	-.01275	.00043	.28999	.33242	.00000
.529	401.690	.04987	.07696	.01913	-.03981	-.01289	.00043	.29028	.33218	.00000
.693	498.670	.05034	.07745	.01922	-.03951	-.01267	.00042	.29156	.33432	.00000
	GRADIENT	.00000	.00000	.00000	.00000	.00000	.00000	.00000	.00000	.00000

RUN NO. 996/ 0 GRADIENT INTERVAL = -5.00/ 5.00

DLT-X	DLT-Z	CN	CA	CLM	CY	CYN	CBL	XCP/L	YCP/L	CPB
200.560	22.472	.01009	.08099	.01786	-.04404	-.01256	.00053	-.67865	.35903	.00000
200.590	100.450	.01637	.08185	.02751	-.03758	-.01182	.00051	-.61613	.33867	.00000
200.560	200.390	.03947	.07722	.02335	-.03584	-.01357	.00032	.14511	.29389	.00000
200.520	299.740	.04955	.07562	.01924	-.03844	-.01259	.00041	.28702	.32955	.00000
200.600	397.800	.04896	.07650	.01935	-.04053	-.01301	.00042	.28226	.33406	.00000
200.610	499.120	.04983	.07623	.01937	-.03957	-.01308	.00042	.28672	.32741	.00000
	GRADIENT	.00000	.00000	.00000	.00000	.00000	.00000	.00000	.00000	.00000

AEDC VA422(IA17) ORB AND ET SEPARATING(ET DATA) (ATR385) (24 JUL 75)

REFERENCE DATA

SREF = 2690.0000 SQ.FT. XMRP = 1360.1000 IN. XT
LREF = 1290.3000 IN. YMRP = .0000 IN. YT
BREF = 1290.3000 IN. ZMRP = 416.4000 IN. ZT
SCALE = .0100

PARAMETRIC DATA

DLT-Y = 60.000 ALPHA = 5.000
BETA = .000 DLTALF = -10.000
DLTBTA = 3.000 MACH = 7.980
AILRON = .000 ELEVON = .000
GRID = 24.000 PO = 300.000

RUN NO. 992/ 0 GRADIENT INTERVAL = -5.00/ 5.00

DLT-X	DLT-Z	CN	CA	CLM	CY	CYN	CBL	XCP/L	YCP/L	CPB
.475	401.790	-.06840	.08077	-.01216	-.03520	-.01226	.00026	.43420	.31497	.00000
.514	502.370	-.06397	.08024	-.01610	-.03552	-.01201	.00033	.38258	.32216	.00000
-.688	603.100	-.06519	.08117	-.01641	-.03716	-.01244	.00034	.38245	.32449	.00000
	GRADIENT	.00000	.00000	.00000	.00000	.00000	.00000	.00000	.00000	.00000

RUN NO. 993/ 0 GRADIENT INTERVAL = -5.00/ 5.00

DLT-X	DLT-Z	CN	CA	CLM	CY	CYN	CBL	XCP/L	YCP/L	CPB
200.440	399.610	-.07724	.08618	-.00591	-.03560	-.01197	.00023	.50485	.32355	.00000
200.490	497.430	-.06172	.07976	-.01580	-.03685	-.01251	.00035	.37950	.32123	.00000
200.470	598.800	-.06214	.08071	-.01588	-.03600	-.01201	.00035	.37981	.32519	.00000
	GRADIENT	.00000	.00000	.00000	.00000	.00000	.00000	.00000	.00000	.00000

RUN NO. 994/ 0 GRADIENT INTERVAL = -5.00/ 5.00

DLT-X	DLT-Z	CN	CA	CLM	CY	CYN	CBL	XCP/L	YCP/L	CPB
400.350	401.790	-.09302	.09548	.00316	-.03566	-.01260	.00037	.58209	.31139	.00000
400.510	500.300	-.06180	.07932	-.01590	-.03521	-.01200	.00032	.37865	.32026	.00000
400.440	600.040	-.06311	.08073	-.01589	-.03621	-.01226	.00034	.38241	.32173	.00000
	GRADIENT	.00000	.00000	.00000	.00000	.00000	.00000	.00000	.00000	.00000

AEDC VA422(IA17) ORB AND ET SEPARATING(ET DATA) (ATR387) (24 JUL 75)

REFERENCE DATA

SREF = 2690.0000 SQ.FT. XMRP = 1360.1000 IN. XT
LREF = 1290.3000 IN. YMRP = .0000 IN. YT
BREF = 1290.3000 IN. ZMRP = 416.4000 IN. ZT
SCALE = .0100

PARAMETRIC DATA

DLT-Y = 60.000 ALPHA = 5.000
BETA = .000 DLTALF = -20.000
DLTBTA = 3.000 MACH = 7.980
AILRON = .000 ELEVON = .000
GRID = 24.000 PO = 300.000

RUN NO. 991/ 0 GRADIENT INTERVAL = -5.00/ 5.00

DLT-X	DLT-Z	CN	CA	CLM	CY	CYN	CBL	XCP/L	YCP/L	CPB
.357	801.220	-.21616	.10129	-.03587	-.04219	-.00944	.00039	.44241	.40198	.00000
.467	900.200	-.21651	.10109	-.03598	-.04136	-.00934	.00038	.44226	.40053	.00000
.516	1000.200	-.21776	.10170	-.03623	-.04201	-.00937	.00039	.44212	.40247	.00000
	GRADIENT	.00000	.00000	.00000	.00000	.00000	.00000	.00000	.00000	.00000

RUN NO. 989/ 0 GRADIENT INTERVAL = -5.00/ 5.00

DLT-X	DLT-Z	CN	CA	CLM	CY	CYN	CBL	XCP/L	YCP/L	CPB
200.360	750.420	-.21618	.10124	-.03587	-.04110	-.00943	.00037	.44243	.39797	.00000
200.460	800.360	-.21592	.10140	-.03583	-.04125	-.00952	.00038	.44242	.39716	.00000
200.430	900.190	-.21565	.10121	-.03567	-.04149	-.00931	.00039	.44280	.40164	.00000
200.480	1000.200	-.21766	.10160	-.03599	-.04180	-.00959	.00039	.44282	.39806	.00000
	GRADIENT	.00000	.00000	.00000	.00000	.00000	.00000	.00000	.00000	.00000

RUN NO. 990/ 0 GRADIENT INTERVAL = -5.00/ 5.00

DLT-X	DLT-Z	CN	CA	CLM	CY	CYN	CBL	XCP/L	YCP/L	CPB
400.390	750.120	-.21581	.10113	-.03599	-.04198	-.00967	.00038	.44185	.39747	.00000
400.460	800.360	-.21598	.10167	-.03586	-.04199	-.00963	.00039	.44235	.39813	.00000
400.530	900.350	-.21630	.10131	-.03559	-.04165	-.00952	.00038	.44340	.39870	.00000
400.480	1000.400	-.21726	.10064	-.03608	-.04144	-.00938	.00039	.44233	.40014	.00000
	GRADIENT	.00000	.00000	.00000	.00000	.00000	.00000	.00000	.00000	.00000

ORIGINAL PAGE IS OF POOR QUALITY

AEDC VA422(IA17) ORB AND ET SEPARATING(ET DATA) (ATR401) (24 JUL 75)

REFERENCE DATA

SREF = 2690.0000 SQ.FT. XMRP = 1360.1000 IN. XT
LREF = 1290.3000 IN. YMRP = .0000 IN. YT
BREF = 1290.3000 IN. ZMRP = 416.4000 IN. ZT
SCALE = .0100

PARAMETRIC DATA

DLT-Y = 200.000 ALPHA = .000
BETA = .000 DLTALF = .000
DLTBTA = 3.000 MACH = 5.930
AILRON = .000 ELEVON = .000
GRID = 1.000

RUN NO. 94/ 0 GRADIENT INTERVAL = -5.00/ 5.00

DLT-X	DLT-Z	CN	CA	CLM	CY	CYN	CBL	XCP/L	YCP/L	CPB
.836	19.045	-.04295	.09134	.01198	-.04448	-.01089	.00018	.75327	.38729	-.02271
.547	100.260	-.03321	.08931	.01176	-.04218	-.01018	.00027	.80585	.38979	-.02413
.523	200.040	-.01638	.08591	.00712	-.03445	-.01166	.00030	.86185	.32186	-.02089
.595	299.150	-.00706	.08349	.00174	-.03588	-.01221	.00029	.73078	.32069	-.02367
.625	398.710	-.00773	.08412	.00217	-.03670	-.01259	.00030	.75424	.31863	-.02570
.597	499.210	-.00811	.08487	.00225	-.03740	-.01354	.00031	.75250	.30540	-.02589
.606	600.180	-.00952	.08492	.00154	-.03743	-.01384	.00032	.67099	.30007	-.02594
	GRADIENT	.00000	.00000	.00000	.00000	.00000	.00000	.00000	.00000	.00000

RUN NO. 93/ 0 GRADIENT INTERVAL = -5.00/ 5.00

DLT-X	DLT-Z	CN	CA	CLM	CY	CYN	CBL	XCP/L	YCP/L	CPB
200.530	20.527	-.04145	.09018	.00717	-.04627	-.01165	.00014	.67925	.38248	-.02556
200.500	100.850	-.03676	.09016	.01276	-.04215	-.01014	.00026	.80097	.39027	-.02365
200.550	201.020	-.02152	.08649	.00876	-.03592	-.01106	.00022	.84254	.34325	-.02117
200.490	301.650	-.00942	.08328	.00247	-.03534	-.01216	.00029	.74136	.31794	-.02306
200.520	400.290	-.00807	.08419	.00221	-.03610	-.01286	.00031	.74934	.30947	-.02561
200.470	500.090	-.00871	.08499	.00215	-.03712	-.01344	.00031	.73092	.30533	-.02579
200.550	600.100	-.00955	.08484	.00149	-.03703	-.01417	.00031	.66709	.29097	-.02597
	GRADIENT	.00000	.00000	.00000	.00000	.00000	.00000	.00000	.00000	.00000

AEDC VA422(IA17) ORB AND ET SEPARATING(ET DATA) (ATR4C2) (24 JUL 75)

REFERENCE DATA

SREF = 2690.0000 SQ.FT. XMRP = 1380.1000 IN. XT
LREF = 1290.3000 IN. YMRP = .0000 IN. YT
BREF = 1290.3000 IN. ZMRP = 418.4000 IN. ZT
SCALE = .0100

PARAMETRIC DATA

DLT-Y = 200.000 ALPHA = .000
BETA = .000 DLTALF = -10.000
DLTBTA = 3.000 MACH = 5.930
AILRON = .000 ELEVON = .000
ORID = 1.000

RUN NO. 90/ 0 GRADIENT INTERVAL = -5.00/ 5.00

DLT-X	DLT-Z	CN	CA	CLM	CY	CYN	CBL	XCP/L	YCP/L	CPB
.498	401.600	-.16185	.10377	-.01482	-.03881	-.00934	.00042	.49429	.39012	-.02304
.542	497.990	-.14254	.09469	-.02524	-.04018	-.01087	.00036	.43466	.36928	-.02545
.469	598.440	-.14213	.09616	-.02703	-.03992	-.01162	.00032	.42547	.35494	-.02721
.616	800.160	-.14373	.09624	-.02742	-.03970	-.01091	.00031	.42507	.36643	-.02793
	GRADIENT	.00000	.00000	.00000	.00000	.00000	.00000	.00000	.00000	.00000

RUN NO. 89/ 0 GRADIENT INTERVAL = -5.00/ 5.00

DLT-X	DLT-Z	CN	CA	CLM	CY	CYN	CBL	XCP/L	YCP/L	CPB
200.450	402.720	-.16825	.10498	-.01118	-.04185	-.00832	.00034	.51190	.41949	-.02311
200.510	500.580	-.15027	.09924	-.02161	-.04045	-.01032	.00045	.45786	.38004	-.02606
200.550	600.140	-.14340	.09624	-.02738	-.03969	-.01128	.00032	.42494	.35990	-.02706
200.540	800.180	-.14504	.09615	-.02754	-.03864	-.01137	.00030	.42566	.35275	-.02793
	GRADIENT	.00000	.00000	.00000	.00000	.00000	.00000	.00000	.00000	.00000

RUN NO. 88/ 0 GRADIENT INTERVAL = -5.00/ 5.00

DLT-X	DLT-Z	CN	CA	CLM	CY	CYN	CBL	XCP/L	YCP/L	CPB
400.450	400.170	-.17041	.10285	-.01175	-.04236	-.00803	.00030	.51016	.42582	-.02389
400.540	498.630	-.15789	.10317	-.01691	-.04073	-.01031	.00039	.48350	.38143	-.02536
400.460	600.230	-.14397	.09562	-.02673	-.04085	-.01155	.00035	.42862	.36088	-.02560
400.520	800.250	-.14487	.09585	-.02772	-.03811	-.01117	.00028	.42464	.35365	-.02795
	GRADIENT	.00000	.00000	.00000	.00000	.00000	.00000	.00000	.00000	.00000

AEDC VA422(IA17) ORB AND ET SEPARATING(ET DATA) (ATR403) (24 JUL 75)

REFERENCE DATA

SREF = 2690.0000 SQ.FT. XMRP = 1360.1000 IN. XT
LREF = 1290.3000 IN. YMRP = .0000 IN. YT
BREF = 1290.3000 IN. ZMRP = 416.4000 IN. ZT
SCALE = .0100

PARAMETRIC DATA

DLT-Y = 200.000 ALPHA = .000
BETA = .000 DLTALF = -20.000
DLTBTA = 3.000 MACH = 5.930
AILRON = .000 ELEVON = .000
GRID = 1.000

RUN NO. 84/ 0 GRADIENT INTERVAL = -5.00/ 5.00

DLT-X	DLT-Z	CN	CA	CLM	CY	CYN	CBL	XCP/L	YCP/L	CPB
.499	801.610	-.34472	.12016	-.03781	-.05156	-.00815	.00026	.48170	.44794	-.02251
.507	998.920	-.34714	.12185	-.03535	-.04918	-.00714	.00027	.48720	.45695	-.02491
	GRADIENT	.00000	.00000	.00000	.00000	.00000	.00000	.00000	.00000	.00000

RUN NO. 83/ 0 GRADIENT INTERVAL = -5.00/ 5.00

DLT-X	DLT-Z	CN	CA	CLM	CY	CYN	CBL	XCP/L	YCP/L	CPB
200.450	800.380	-.34836	.12092	-.03536	-.05354	-.00806	.00042	.48743	.45320	-.02180
200.460	1000.300	-.34687	.12171	-.03583	-.04929	-.00709	.00023	.48618	.45788	-.02496
	GRADIENT	.00000	.00000	.00000	.00000	.00000	.00000	.00000	.00000	.00000

RUN NO. 82/ 0 GRADIENT INTERVAL = -5.00/ 5.00

DLT-X	DLT-Z	CN	CA	CLM	CY	CYN	CBL	XCP/L	YCP/L	CPB
400.420	800.290	-.35679	.12034	-.03132	-.05387	-.00702	.00036	.49701	.46725	-.02429
400.440	1000.300	-.34593	.12042	-.03658	-.05054	-.00752	.00023	.48446	.45436	-.02513
	GRADIENT	.00000	.00000	.00000	.00000	.00000	.00000	.00000	.00000	.00000

AEDC VA422(IA17) ORB AND ET SEPARATING(ET DATA) (ATR405) (24 JUL 75)

REFERENCE DATA

SREF = 2690.0000 SQ.FT. XMRP = 1360.1000 IN. XT
LREF = 1290.3000 IN. YMRP = .0000 IN. YT
BREF = 1290.3000 IN. ZMRP = 416.4000 IN. ZT
SCALE = .0100

PARAMETRIC DATA

DLT-Y = 200.000 ALPHA = .000
BETA = .000 DLTALF = -20.000
DLTBTA = 3.000 MACH = 5.930
AILRON = .000 ELEVON = .000
GRID = 26.000

RUN NO. 384/ 0 GRADIENT INTERVAL = -5.00/ 5.00

DLT-X	DLT-Z	CN	CA	CLM	CY	CYN	CBL	XCP/L	YCP/L	CPB
.329	799.670	-.34377	.12528	-.03775	-.04980	-.00775	.00029	.48163	.44965	.00000
.468	899.040	-.34561	.12579	-.03654	-.04934	-.00731	.00034	.48449	.45479	.00000
.556	1000.300	-.34674	.12612	-.03515	-.04762	-.00667	.00031	.48752	.46055	.00000
	GRADIENT	.00000	.00000	.00000	.00000	.00000	.00000	.00000	.00000	.00000

AEDC VA422(1A17) ORB AND ET SEPARATING(ET DATA) (ATR405) (24 JUL 75)

REFERENCE DATA

SREF = 2690.0000 SQ.FT. XMRP = 1360.1000 IN. XT
LREF = 1290.3000 IN. YMRP = .0000 IN. YT
BREF = 1290.3000 IN. ZMRP = 416.4000 IN. ZT
SCALE = .0100

PARAMETRIC DATA

DLT-Y = 200.000 ALPHA = .000
BETA = .000 DLTALF = -20.000
DLTBTA = 3.000 MACH = 5.930
AILRON = .000 ELEVON = .000
GRID = 26.000

RUN NO. 379/ 0 GRADIENT INTERVAL = -5.00/ 5.00

DLT-X	DLT-Z	CN	CA	CLM	CY	CYN	CBL	XCP/L	YCP/L	CPB
200.450	750.580	-.35676	.12552	-.03029	-.05199	-.00658	.00043	.49902	.46990	.00000
200.460	800.190	-.34818	.12601	-.03539	-.05061	-.00752	.00044	.48732	.45456	.00000
200.400	900.330	-.34626	.12566	-.03645	-.04886	-.00726	.00029	.48480	.45454	.00000
200.530	1000.200	-.34644	.12565	-.03561	-.04720	-.00646	.00025	.48653	.46268	.00000
	GRADIENT	.00000	.00000	.00000	.00000	.00000	.00000	.00000	.00000	.00000

RUN NO. 378/ 0 GRADIENT INTERVAL = -5.00/ 5.00

DLT-X	DLT-Z	CN	CA	CLM	CY	CYN	CBL	XCP/L	YCP/L	CPB
400.450	750.280	-.36587	.13079	-.02532	-.05057	-.00769	.00060	.50999	.45207	.00000
400.530	800.340	-.35522	.12504	-.03152	-.05134	-.00666	.00037	.49635	.46775	.00000
400.560	900.370	-.34500	.12453	-.03713	-.04850	-.00731	.00025	.48315	.45302	.00000
400.490	1000.200	-.34543	.12482	-.03639	-.04797	-.00669	.00027	.48474	.46094	.00000
	GRADIENT	.00000	.00000	.00000	.00000	.00000	.00000	.00000	.00000	.00000

AEDC VA422(1A17) ORB AND ET SEPARATING(ET DATA) (ATR406) (24 JUL 75)

REFERENCE DATA

SREF = 2690.0000 SQ.FT. XMRP = 1360.1000 IN. XT
LREF = 1290.3000 IN. YMRP = .0000 IN. YT
BREF = 1290.3000 IN. ZMRP = 416.4000 IN. ZT
SCALE = .0100

PARAMETRIC DATA

DLT-Y = 200.000 ALPHA = .000
BETA = 3.000 DLTALF = .000
DLTBTA = 3.000 MACH = 5.930
AILRON = .000 ELEVON = .000
GRID = 3.000

RUN NO. 159/ 0 GRADIENT INTERVAL = -5.00/ 5.00

DLT-X	DLT-Z	CN	CA	CLM	CY	CYN	CBL	XCP/L	YCP/L	CPB
.624	18.837	-.04721	.09851	.01192	-.08565	-.01874	.00038	.73476	.40550	.00000
.564	100.330	-.03510	.09668	.01065	-.07841	-.01856	.00051	.77023	.39298	.00000
.591	199.630	-.01776	.09224	.00585	-.07154	-.02136	.00058	.78863	.34976	.00000
.746	298.860	-.00902	.09063	.00099	-.07142	-.02146	.00058	.63528	.34842	.00000
.655	399.040	-.00932	.09104	.00081	-.07273	-.02138	.00059	.61883	.35300	.00000
.597	499.230	-.00991	.09126	.00079	-.07346	-.02146	.00058	.61388	.35423	.00000
.703	600.100	-.01071	.09085	.00075	-.07344	-.02148	.00059	.60721	.35423	.00000
	GRADIENT	.00000	.00000	.00000	.00000	.00000	.00000	.00000	.00000	.00000

ORIGINAL PAGE IS OF POOR QUALITY

DATE 25 JUL 75 TABULATED SOURCE DATA - IA17A

AEDC VA422(IA17) ORB AND ET SEPARATING(ET DATA) (ATR406) (24 JUL 75)

REFERENCE DATA

SREF = 2690.0000 SQ.FT. XMRP = 1360.1000 IN. XT
LREF = 1290.3000 IN. YMRP = .0000 IN. YT
BREF = 1290.3000 IN. ZMRP = 416.4000 IN. ZT
SCALE = .0100

PARAMETRIC DATA

DLT-Y = 200.000 ALPHA = .000
BETA = 3.000 DLTALF = .000
DLTBTA = 3.000 MACH = 5.930
AILRON = .000 ELEVON = .000
GRID = 3.000

RUN NO. 158/ 0 GRADIENT INTERVAL = -5.00/ 5.00

DLT-X	DLT-Z	CN	CA	CLM	CY	CYN	CBL	XCP/L	YCP/L	CPB
200.550	20.926	-.04567	.09996	.00752	-.09148	-.01942	.00046	.67337	.41002	.00000
200.500	101.170	-.03795	.09879	.01160	-.08065	-.01845	.00047	.77181	.39852	.00000
200.570	201.310	-.02171	.09392	.00739	-.07327	-.02079	.00050	.79607	.36009	.00000
200.630	301.480	-.01080	.09013	.00191	-.07252	-.02145	.00062	.68227	.35172	.00000
200.570	400.360	-.00967	.09094	.00074	-.07244	-.02141	.00058	.61173	.35190	.00000
200.580	500.150	-.00998	.09097	.00068	-.07303	-.02156	.00059	.60446	.35207	.00000
200.670	600.120	-.01056	.09120	.00067	-.07224	-.02172	.00057	.60243	.34832	.00000
	GRADIENT	.00000	.00000	.00000	.00000	.00000	.00000	.00000	.00000	.00000

AEDC VA422(IA17) ORB AND ET SEPARATING(ET DATA) (ATR407) (24 JUL 75)

REFERENCE DATA

SREF = 2690.0000 SQ.FT. XMRP = 1360.1000 IN. XT
LREF = 1290.3000 IN. YMRP = .0000 IN. YT
BREF = 1290.3000 IN. ZMRP = 416.4000 IN. ZT
SCALE = .0100

PARAMETRIC DATA

DLT-Y = 200.000 ALPHA = .000
BETA = 3.000 DLTALF = -10.000
DLTBTA = 3.000 MACH = 5.930
AILRON = .000 ELEVON = .000
GRID = 3.000

RUN NO. 155/ 0 GRADIENT INTERVAL = -5.00/ 5.00

DLT-X	DLT-Z	CN	CA	CLM	CY	CYN	CBL	XCP/L	YCP/L	CPB
.501	401.640	-.16874	.11179	-.01289	-.08034	-.01794	.00060	.50497	.40234	.00000
.644	497.910	-.15012	.10225	-.02404	-.07836	-.01903	.00061	.44646	.38872	.00000
.577	598.350	-.14574	.10128	-.02657	-.07944	-.01936	.00057	.43095	.38809	.00000
.554	750.060	-.14829	.10197	-.02660	-.08103	-.01940	.00058	.43303	.39104	.00000
.679	800.130	-.14806	.10188	-.02653	-.08044	-.01901	.00057	.43315	.39324	.00000
	GRADIENT	.00000	.00000	.00000	.00000	.00000	.00000	.00000	.00000	.00000

RUN NO. 154/ 0 GRADIENT INTERVAL = -5.00/ 5.00

DLT-X	DLT-Z	CN	CA	CLM	CY	CYN	CBL	XCP/L	YCP/L	CPB
200.600	402.460	-.17181	.11027	-.01274	-.08332	-.01758	.00058	.50652	.41090	.00000
200.490	500.630	-.15814	.10733	-.01982	-.08071	-.01867	.00063	.47077	.39676	.00000
200.470	600.210	-.14728	.10225	-.02679	-.08046	-.01988	.00057	.43125	.38570	.00000
200.470	750.110	-.14711	.10208	-.02671	-.08116	-.01937	.00057	.43148	.39163	.00000
200.490	800.190	-.14800	.10188	-.02664	-.08124	-.01935	.00058	.43260	.39193	.00000
	GRADIENT	.00000	.00000	.00000	.00000	.00000	.00000	.00000	.00000	.00000

AEDC VA422(IA17) ORB AND ET SEPARATING(ET DATA) (ATR407) (24 JUL 75)

REFERENCE DATA

SREF = 2690.0000 SQ.FT. XMRP = 1380.1000 IN. XT
LREF = 1290.3000 IN. YMRP = .0000 IN. YT
BREF = 1290.3000 IN. ZMRP = 416.4000 IN. ZT
SCALE = .0100

PARAMETRIC DATA

DLT-Y = 200.000 ALPHA = .000
BETA = 3.000 DLTALF = -10.000
DLTBTA = 3.000 MACH = 5.930
AILRON = .000 ELEVON = .000
GRID = 3.000

RUN NO. 153/ 0 GRADIENT INTERVAL = -5.00/ 5.00

DLT-X	DLT-Z	CN	CA	CLM	CY	CYN	CBL	XCP/L	YCP/L	CPB
400.540	400.250	-.17381	.11108	-.01241	-.08423	-.01701	.00060	.50848	.41729	.00000
400.480	498.470	-.16655	.11036	-.01558	-.08159	-.01881	.00057	.49298	.39727	.00000
400.500	600.160	-.14965	.10141	-.02528	-.08004	-.01967	.00059	.44030	.38670	.00000
400.540	750.080	-.14756	.10199	-.02674	-.07960	-.01944	.00057	.43174	.38769	.00000
400.550	800.230	-.14912	.10167	-.02670	-.07988	-.01960	.00057	.43325	.38693	.00000
	GRADIENT	.00000	.00000	.00000	.00000	.00000	.00000	.00000	.00000	.00000

AEDC VA422(IA17) ORB AND ET SEPARATING(ET DATA) (ATR409) (24 JUL 75)

REFERENCE DATA

SREF = 2690.0000 SQ.FT. XMRP = 1360.1000 IN. XT
LREF = 1290.3000 IN. YMRP = .0000 IN. YT
BREF = 1290.3000 IN. ZMRP = 416.4000 IN. ZT
SCALE = .0100

PARAMETRIC DATA

DLT-Y = 200.000 ALPHA = .000
BETA = 3.000 DLTALF = -20.000
DLTBTA = 3.000 MACH = 5.930
AILRON = .000 ELEVON = .000
GRID = 3.000

RUN NO. 137/ 0 GRADIENT INTERVAL = -5.00/ 5.00

DLT-X	DLT-Z	CN	CA	CLM	CY	CYN	CBL	XCP/L	YCP/L	CPB
.502	800.140	-.35005	.12784	-.03377	-.09659	-.01424	.00069	.49095	.45532	.00000
.664	898.700	-.35018	.12796	-.03383	-.09842	-.01433	.00068	.49124	.45661	.00000
.621	1000.300	-.35088	.12807	-.03343	-.09917	-.01412	.00069	.49178	.45884	.00000
	GRADIENT	.00000	.00000	.00000	.00000	.00000	.00000	.00000	.00000	.00000

RUN NO. 135/ 0 GRADIENT INTERVAL = -5.00/ 5.00

DLT-X	DLT-Z	CN	CA	CLM	CY	CYN	CBL	XCP/L	YCP/L	CPB
200.560	751.110	-.36817	.13145	-.02384	-.10033	-.01265	.00073	.51311	.47022	.00000
200.610	799.740	-.35763	.12752	-.03010	-.09921	-.01355	.00073	.49953	.46292	.00000
200.550	900.320	-.35015	.12798	-.03391	-.09881	-.01433	.00068	.49068	.45705	.00000
200.510	1000.300	-.35200	.12830	-.03333	-.09909	-.01398	.00072	.49218	.45975	.00000
	GRADIENT	.00000	.00000	.00000	.00000	.00000	.00000	.00000	.00000	.00000

AEDC VA422(IA17) ORB AND ET SEPARATING(ET DATA) (ATR409) (24 JUL 75)

REFERENCE DATA

SREF = 2690.0000 SQ.FT. XMRP = 1360.1000 IN. XT
LREF = 1290.3000 IN. YMRP = .0000 IN. YT
BREF = 1290.3000 IN. ZMRP = 416.4000 IN. ZT
SCALE = .0100

PARAMETRIC DATA

DLT-Y = 200.000 ALPHA = .000
BETA = 3.000 DLTALF = -20.000
DLTBTA = 3.000 MACH = 5.930
AILRON = .000 ELEVON = .000
GRID = 3.000

RUN NO. 134/ 0 GRADIENT INTERVAL = -5.00/ 5.00

DLT-X	DLT-Z	CN	CA	CLM	CY	CYN	CBL	XCP/L	YCP/L	CPB
400.480	750.350	-.37588	.13759	-.01859	-.09948	-.01341	.00080	.52377	.46419	.00000
400.520	800.340	-.36545	.13077	-.02525	-.10047	-.01319	.00071	.51007	.46666	.00000
400.470	900.400	-.34994	.12695	-.03383	-.09838	-.01449	.00071	.49080	.45547	.00000
400.450	1000.200	-.35239	.12773	-.03336	-.09775	-.01427	.00068	.49221	.45633	.00000
	GRADIENT	.00000	.00000	.00000	.00000	.00000	.00000	.00000	.00000	.00000

AEDC VA422(IA17) ORB AND ET SEPARATING(ET DATA) (ATR410) (24 JUL 75)

REFERENCE DATA

SREF = 2690.0000 SQ.FT. XMRP = 1380.1000 IN. XT
LREF = 1290.3000 IN. YMRP = .0000 IN. YT
BREF = 1290.3000 IN. ZMRP = 416.4000 IN. ZT
SCALE = .0100

PARAMETRIC DATA

DLT-Y = 200.000 ALPHA = 5.000
BETA = .000 DLTALF = .000
DLTBTA = 3.000 MACH = 5.930
AILRON = .000 ELEVON = .000
GRID = 5.000

RUN NO. 237/ 0 GRADIENT INTERVAL = -5.00/ 5.00

DLT-X	DLT-Z	CN	CA	CLM	CY	CYN	CBL	XCP/L	YCP/L	CPB
.553	17.560	.01918	.09202	.02892	-.04776	-.00750	.00011	-.49534	.44864	.00000
.556	101.510	.02605	.09137	.02769	-.04199	-.00843	.00012	-.18431	.41612	.00000
.592	201.310	.04281	.08620	.02281	-.03437	-.01066	.00031	.18600	.34169	.00000
.575	300.130	.05259	.08549	.01898	-.03432	-.01079	.00034	.30614	.33874	.00000
.599	399.070	.05317	.08651	.01891	-.03564	-.01097	.00036	.30992	.34318	.00000
.742	498.820	.05339	.08681	.01879	-.03639	-.01099	.00036	.31240	.34737	.00000
.751	598.750	.05278	.08673	.01895	-.03628	-.01109	.00037	.30737	.34474	.00000
	GRADIENT	.00000	.00000	.00000	.00000	.00000	.00000	.00000	.00000	.00000

RUN NO. 238/ 0 GRADIENT INTERVAL = -5.00/ 5.00

DLT-X	DLT-Z	CN	CA	CLM	CY	CYN	CBL	XCP/L	YCP/L	CPB
200.470	19.882	.01639	.09355	.02431	-.05457	-.00861	.00020	-.47825	.44815	.00000
200.670	99.753	.02163	.09208	.02914	-.04324	-.00808	.00017	-.38319	.42780	.00000
200.600	200.680	.03851	.08722	.02509	-.03415	-.01075	.00030	.10321	.33835	.00000
200.630	300.830	.05212	.08580	.01891	-.03555	-.01116	.00035	.30481	.33899	.00000
200.520	401.680	.05283	.08708	.01870	-.03494	-.01089	.00035	.31104	.34058	.00000
200.670	500.180	.05309	.08675	.01874	-.03564	-.01080	.00035	.31179	.34663	.00000
200.660	600.010	.05243	.08769	.01893	-.03566	-.01121	.00035	.30604	.33866	.00000
	GRADIENT	.00000	.00000	.00000	.00000	.00000	.00000	.00000	.00000	.00000

AEDC VA422(IA17) ORB AND ET SEPARATING(ET DATA) (ATR411) (24 JUL 75)

REFERENCE DATA

SREF = 2690.0000 SQ.FT. XMRP = 1380.1000 IN. XT
LREF = 1290.3000 IN. YMRP = .0000 IN. YT
BREF = 1290.3000 IN. ZMRP = 418.4000 IN. ZT
SCALE = .0100

PARAMETRIC DATA

DLT-Y = 200.000 ALPHA = 5.000
BETA = .000 DLTALF = -10.000
DLTBTA = 3.000 MACH = 5.930
AILRON = .000 ELEVON = .000
GRID = 5.000

RUN NO. 233/ 0 GRADIENT INTERVAL = -5.00/ 5.00

DLT-X	DLT-Z	CN	CA	CLM	CY	CYN	CBL	XCP/L	YCP/L	CPB
.557	401.310	-.08407	.09410	-.00410	-.03518	-.00998	.00042	.52426	.36021	.00000
.605	498.540	-.06741	.09149	-.01371	-.03317	-.01120	.00031	.41623	.32252	.00000
.510	598.500	-.06633	.09311	-.01415	-.03284	-.01095	.00031	.40927	.32544	.00000
.548	748.310	-.06590	.09220	-.01405	-.03460	-.01147	.00033	.40937	.32685	.00000
.665	800.110	-.06770	.09304	-.01408	-.03526	-.01177	.00034	.41303	.32512	.00000
	GRADIENT	.00000	.00000	.00000	.00000	.00000	.00000	.00000	.00000	.00000

RUN NO. 232/ 0 GRADIENT INTERVAL = -5.00/ 5.00

DLT-X	DLT-Z	CN	CA	CLM	CY	CYN	CBL	XCP/L	YCP/L	CPB
200.520	401.600	-.09536	.09861	.00227	-.03355	-.00986	.00047	.57496	.35309	.00000
200.430	502.200	-.06798	.09116	-.01370	-.03350	-.01110	.00033	.41750	.32687	.00000
200.520	600.350	-.06631	.09214	-.01426	-.03355	-.01112	.00032	.40807	.32673	.00000
200.590	750.140	-.06758	.09246	-.01400	-.03552	-.01189	.00033	.41360	.32452	.00000
200.620	800.150	-.06821	.09318	-.01403	-.03591	-.01211	.00032	.41463	.32284	.00000
	GRADIENT	.00000	.00000	.00000	.00000	.00000	.00000	.00000	.00000	.00000

RUN NO. 231/ 0 GRADIENT INTERVAL = -5.00/ 5.00

DLT-X	DLT-Z	CN	CA	CLM	CY	CYN	CBL	XCP/L	YCP/L	CPB
400.510	399.350	-.11294	.10707	.01223	-.03456	-.00973	.00013	.63397	.36163	.00000
400.590	498.080	-.07111	.09149	-.01210	-.03325	-.01054	.00034	.43952	.33678	.00000
400.540	599.130	-.06456	.09216	-.01433	-.03309	-.01102	.00031	.40332	.32571	.00000
400.560	750.170	-.06828	.09206	-.01404	-.03483	-.01198	.00032	.41473	.31807	.00000
400.660	800.030	-.06831	.09413	-.01409	-.03632	-.01233	.00033	.41420	.32110	.00000
	GRADIENT	.00000	.00000	.00000	.00000	.00000	.00000	.00000	.00000	.00000

ORIGINAL PAGE IS OF POOR QUALITY

DATE 25 JUL 75 TABULATED SOURCE DATA - IA17A

AEDC VA422(IA17) ORB AND ET SEPARATING(ET DATA) (ATR413) (24 JUL 75)

REFERENCE DATA

SREF = 2690.0000 SQ.FT. XMRP = 1380.1000 IN. XT
LREF = 1290.3000 IN. YMRP = .0000 IN. YT
BREF = 1290.3000 IN. ZMRP = 416.4000 IN. ZT
SCALE = .0100

PARAMETRIC DATA

DLT-Y = 200.000 ALPHA = 5.000
BETA = .000 DLTALF = -20.000
DLTBTA = 3.000 MACH = 5.930
AILRON = .000 ELEVON = .000
GRID = 5.000

RUN NO. 227/ 0 GRADIENT INTERVAL = -5.00/ 5.00

DLT-X	DLT-Z	CN	CA	CLM	CY	CYN	CBL	XCP/L	YCP/L	CPB
.431	800.100	-.22990	.11060	-.03448	-.04084	-.00852	.00032	.45356	.41263	.00000
.564	899.110	-.23031	.11115	-.03524	-.04123	-.00922	.00033	.45145	.40218	.00000
.639	1000.300	-.23155	.11107	-.03576	-.04337	-.00918	.00033	.45044	.41039	.00000
	GRADIENT	.00000	.00000	.00000	.00000	.00000	.00000	.00000	.00000	.00000

RUN NO. 225/ 0 GRADIENT INTERVAL = -5.00/ 5.00

DLT-X	DLT-Z	CN	CA	CLM	CY	CYN	CBL	XCP/L	YCP/L	CPB
200.400	750.680	-.22970	.10973	-.03370	-.04203	-.00879	.00034	.45586	.41221	.00000
200.520	799.920	-.23016	.11048	-.03413	-.04198	-.00914	.00033	.45474	.40616	.00000
200.500	900.340	-.23029	.11039	-.03521	-.04333	-.00980	.00034	.45154	.40032	.00000
200.580	1000.300	-.23056	.11034	-.03567	-.04464	-.00970	.00034	.45026	.40661	.00000
	GRADIENT	.00000	.00000	.00000	.00000	.00000	.00000	.00000	.00000	.00000

RUN NO. 224/ 0 GRADIENT INTERVAL = -5.00/ 5.00

DLT-X	DLT-Z	CN	CA	CLM	CY	CYN	CBL	XCP/L	YCP/L	CPB
400.500	750.240	-.23281	.11021	-.03208	-.04237	-.00865	.00043	.46207	.41574	.00000
400.390	800.210	-.22926	.10989	-.03419	-.04256	-.00932	.00033	.45414	.40538	.00000
400.560	900.290	-.23017	.11036	-.03519	-.04339	-.00963	.00034	.45152	.40320	.00000
400.510	1000.100	-.23182	.11064	-.03561	-.04444	-.00974	.00035	.45101	.40524	.00000
	GRADIENT	.00000	.00000	.00000	.00000	.00000	.00000	.00000	.00000	.00000

AEDC VA422(IA17) ORB AND ET SEPARATING(ET DATA) (ATR414) (24 JUL 75)

REFERENCE DATA

SREF = 2690.0000 SQ.FT. XMRP = 1360.1000 IN. XT
LREF = 1290.3000 IN. YMRP = .0000 IN. YT
BREF = 1290.3000 IN. ZMRP = 416.4000 IN. ZT
SCALE = .0100

PARAMETRIC DATA

DLT-Y = 200.000 ALPHA = 5.000
BETA = 3.000 DLTALF = .000
DLTBTA = 3.000 MACH = 5.930
AILRON = .000 ELEVON = .000
GRID = 4.000

RUN NO. 197/ 0 GRADIENT INTERVAL = -5.00/ 5.00

DLT-X	DLT-Z	CN	CA	CLM	CY	CYN	CBL	XCP/L	YCP/L	CPB
.576	20.216	.01447	.09586	.03008	-.08520	-.01763	.00055	-.89374	.41380	.00000
.661	101.360	.02611	.09228	.02541	-.07795	-.01896	.00054	-.12160	.38839	.00000
.630	201.730	.04202	.09042	.02362	-.07010	-.02183	.00048	.16563	.34076	.00000
.687	300.100	.05400	.08832	.01862	-.07263	-.02101	.00065	.31750	.35626	.00000
.742	398.740	.05533	.08918	.01847	-.07382	-.02097	.00066	.32515	.35985	.00000
.786	498.580	.05513	.08890	.01844	-.07471	-.02091	.00066	.32464	.36282	.00000
.698	598.820	.05534	.08933	.01827	-.07478	-.02084	.00067	.32771	.36364	.00000
	GRADIENT	.00000	.00000	.00000	.00000	.00000	.00000	.00000	.00000	.00000

RUN NO. 198/ 0 GRADIENT INTERVAL = -5.00/ 5.00

DLT-X	DLT-Z	CN	CA	CLM	CY	CYN	CBL	XCP/L	YCP/L	CPB
200.590	19.461	.01382	.09634	.02194	-.09522	-.01874	.00055	-.55105	.42081	.00000
200.690	99.989	.02101	.09574	.02726	-.08005	-.01828	.00052	-.34802	.39877	.00000
200.740	200.800	.03957	.09084	.02547	-.07077	-.02204	.00045	.10872	.34076	.00000
200.620	301.260	.05352	.08826	.01855	-.07456	-.02130	.00067	.31624	.35878	.00000
200.790	401.650	.05363	.08930	.01828	-.07354	-.02092	.00065	.32025	.35959	.00000
200.600	500.220	.05499	.08931	.01829	-.07543	-.02107	.00067	.32597	.36321	.00000
200.670	599.990	.05454	.08927	.01820	-.07470	-.02088	.00065	.32529	.36308	.00000
	GRADIENT	.00000	.00000	.00000	.00000	.00000	.00000	.00000	.00000	.00000

AEDC VA422(IA17) ORB AND ET SEPARATING(ET DATA) (ATR415) (24 JUL 75)

REFERENCE DATA

SREF =	2690.0000 SQ.FT.	XMRP =	1360.1000 IN. XT
LREF =	1290.3000 IN.	YMRP =	.0000 IN. YT
BREF =	1290.3000 IN.	ZMRP =	416.4000 IN. ZT
SCALE =	.0100		

PARAMETRIC DATA

DLT-Y =	200.000	ALPHA =	5.000
BETA =	3.000	DLTALF =	-10.000
DLTBTA =	3.000	MACH =	5.930
AILRON =	.000	ELEVON =	.000
GRID =	4.000		

RUN NO. 193/ 0 GRADIENT INTERVAL = -5.00/ 5.00

DLT-X	DLT-Z	CN	CA	CLM	CY	CYN	CBL	XCP/L	YCP/L	CPB
.606	401.490	-.08645	.09670	-.00280	-.07097	-.02004	.00050	.53572	.36107	.00000
.512	498.160	-.06742	.09404	-.01301	-.06986	-.02058	.00058	.42354	.35257	.00000
.609	598.260	-.06723	.09394	-.01333	-.06998	-.02056	.00058	.41979	.35312	.00000
.572	748.370	-.06819	.09454	-.01358	-.07101	-.02046	.00059	.41920	.35704	.00000
.713	800.110	-.06887	.09453	-.01361	-.07110	-.02053	.00059	.42027	.35657	.00000
	GRADIENT	.00000	.00000	.00000	.00000	.00000	.00000	.00000	.00000	.00000

RUN NO. 192/ 0 GRADIENT INTERVAL = -5.00/ 5.00

DLT-X	DLT-Z	CN	CA	CLM	CY	CYN	CBL	XCP/L	YCP/L	CPB
200.550	402.150	-.09631	.09915	.00295	-.07070	-.01963	.00057	.57974	.36437	.00000
200.520	501.950	-.06827	.09358	-.01298	-.07035	-.02072	.00057	.42551	.35261	.00000
200.600	600.490	-.06852	.09530	-.01353	-.07040	-.02063	.00058	.42037	.35365	.00000
200.610	750.090	-.06838	.09514	-.01375	-.07140	-.02053	.00059	.41780	.35751	.00000
200.640	800.020	-.06836	.09474	-.01366	-.07167	-.02053	.00059	.41872	.35823	.00000
	GRADIENT	.00000	.00000	.00000	.00000	.00000	.00000	.00000	.00000	.00000

RUN NO. 191/ 0 GRADIENT INTERVAL = -5.00/ 5.00

DLT-X	DLT-Z	CN	CA	CLM	CY	CYN	CBL	XCP/L	YCP/L	CPB
400.540	399.450	-.10885	.10435	.00978	-.07116	-.01964	.00050	.62108	.36548	.00000
400.620	498.010	-.07179	.09440	-.01088	-.06948	-.02051	.00053	.45241	.35215	.00000
400.680	599.250	-.06830	.09445	-.01342	-.07027	-.02045	.00058	.42113	.35507	.00000
400.610	750.190	-.06899	.09557	-.01362	-.07120	-.02072	.00059	.42043	.35507	.00000
400.600	800.060	-.06912	.09562	-.01367	-.07219	-.02108	.00060	.42014	.35435	.00000
	GRADIENT	.00000	.00000	.00000	.00000	.00000	.00000	.00000	.00000	.00000

AEDC VA422(IA17) ORB AND ET SEPARATING(ET DATA) (ATR417) (24 JUL 75)

REFERENCE DATA

SREF = 2690.0000 SQ.FT. XMRP = 1360.1000 IN. XT
LREF = 1290.3000 IN. YMRP = .0000 IN. YT
BREF = 1290.3000 IN. ZMRP = 416.4000 IN. ZT
SCALE = .0100

PARAMETRIC DATA

DLT-Y = 200.000 ALPHA = 5.000
BETA = 3.000 DLTALF = -20.000
DLTBTA = 3.000 MACH = 5.930
AILRON = .000 ELEVON = .000
GRID = 4.000

RUN NO. 187/ 0 GRADIENT INTERVAL = -5.00/ 5.00

DLT-X	DLT-Z	CN	CA	CLM	CY	CYN	CBL	XCP/L	YCP/L	CPB
.583	800.240	-.23498	.11215	-.03267	-.08432	-.01715	.00063	.46120	.41622	.00000
.646	899.040	-.23421	.11212	-.03290	-.08539	-.01727	.00064	.46021	.41704	.00000
.577	1000.300	-.23520	.11205	-.03308	-.08626	-.01726	.00065	.46007	.41854	.00000
	GRADIENT	.00000	.00000	.00000	.00000	.00000	.00000	.00000	.00000	.00000

RUN NO. 185/ 0 GRADIENT INTERVAL = -5.00/ 5.00

DLT-X	DLT-Z	CN	CA	CLM	CY	CYN	CBL	XCP/L	YCP/L	CPB
200.550	750.790	-.23450	.11182	-.03223	-.08396	-.01700	.00062	.46231	.41686	.00000
200.570	799.880	-.23368	.11233	-.03257	-.08448	-.01734	.00062	.46096	.41496	.00000
200.620	900.300	-.23311	.11240	-.03298	-.08621	-.01778	.00064	.45951	.41423	.00000
200.690	1000.300	-.23502	.11207	-.03315	-.08632	-.01756	.00062	.45980	.41619	.00000
	GRADIENT	.00000	.00000	.00000	.00000	.00000	.00000	.00000	.00000	.00000

RUN NO. 184/ 0 GRADIENT INTERVAL = -5.00/ 5.00

DLT-X	DLT-Z	CN	CA	CLM	CY	CYN	CBL	XCP/L	YCP/L	CPB
400.550	750.250	-.24014	.11181	-.02904	-.08529	-.01727	.00063	.47384	.41689	.00000
400.640	800.260	-.23363	.11313	-.03248	-.08601	-.01776	.00062	.46121	.41411	.00000
400.500	900.330	-.23445	.11219	-.03301	-.08579	-.01784	.00064	.45997	.41310	.00000
400.610	1000.200	-.23422	.11175	-.03337	-.08681	-.01787	.00062	.45882	.41455	.00000
	GRADIENT	.00000	.00000	.00000	.00000	.00000	.00000	.00000	.00000	.00000

ORIGINAL PAGE IS OF POOR QUALITY

DATE 25 JUL 75 TABULATED SOURCE DATA - IA17A (ATR418) (24 JUL 75)

AEDC VA422(IA17) ORB AND ET SEPARATING(ET DATA)

REFERENCE DATA

SREF = 2880.0000 SQ.FT. XMRP = 1380.1000 IN. XT
LREF = 1290.3000 IN. YMRP = .0000 IN. YT
BREF = 1290.3000 IN. ZMRP = 416.4000 IN. ZT
SCALE = .0100

PARAMETRIC DATA

DLT-Y = 200.000 ALPHA = -5.000
BETA = .000 DLTALF = .000
DLTBTA = 3.000 MACH = 5.930
AILRON = .000 ELEVON = .000
GRID = 6.000

RUN NO. 277/ 0 GRADIENT INTERVAL = -5.00/ 5.00

DLT-X	DLT-Z	CN	CA	CLM	CY	CYN	CBL	XCP/L	YCP/L	CPB
.555	19.767	-.10330	.09901	-.00737	-.03927	-.01122	.00012	.50853	.35867	.00000
.611	99.243	-.09257	.09889	-.00600	-.03850	-.00874	.00019	.51306	.39976	.00000
.560	199.030	-.08263	.09949	-.00752	-.03722	-.01069	.00025	.49474	.35767	.00000
.584	298.910	-.07551	.09585	-.01297	-.03749	-.01213	.00038	.43836	.33235	.00000
.555	399.130	-.07300	.09559	-.01546	-.03542	-.01250	.00033	.41037	.31179	.00000
.464	500.010	-.07365	.09545	-.01537	-.03366	-.01165	.00029	.41257	.31661	.00000
.614	600.080	-.07284	.09503	-.01472	-.03291	-.01093	.00029	.41712	.32626	.00000
	GRADIENT	.00000	.00000	.00000	.00000	.00000	.00000	.00000	.00000	.00000

RUN NO. 278/ 0 GRADIENT INTERVAL = -5.00/ 5.00

DLT-X	DLT-Z	CN	CA	CLM	CY	CYN	CBL	XCP/L	YCP/L	CPB
200.460	21.510	-.10023	.09841	-.01255	-.03869	-.01191	.00013	.47088	.34333	.00000
200.540	101.410	-.09344	.09982	-.00694	-.03922	-.00954	.00017	.50647	.38841	.00000
200.560	201.880	-.08434	.09833	-.00876	-.03784	-.01026	.00021	.48577	.36897	.00000
200.520	300.570	-.08219	.10064	-.00880	-.03603	-.01196	.00032	.48352	.32646	.00000
200.510	400.160	-.07303	.09552	-.01497	-.03482	-.01229	.00035	.41516	.31175	.00000
200.630	500.170	-.07314	.09469	-.01591	-.03408	-.01200	.00032	.40640	.31237	.00000
200.520	599.970	-.07292	.09516	-.01509	-.03308	-.01112	.00030	.41378	.32355	.00000
	GRADIENT	.00000	.00000	.00000	.00000	.00000	.00000	.00000	.00000	.00000

AEDC VA422(IA17) ORB AND ET SEPARATING(ET DATA) (ATR419) (24 JUL 75)

REFERENCE DATA

SREF = 2690.0000 SQ.FT. XMRP = 1360.1000 IN. XT
LREF = 1290.3000 IN. YMRP = .0000 IN. YT
BREF = 1290.3000 IN. ZMRP = 418.4000 IN. ZT
SCALE = .0100

PARAMETRIC DATA

DLT-Y = 200.000 ALPHA = -5.000
BETA = .000 DLTALF = -10.000
DLTBTA = 3.000 MACH = 5.930
AILRON = .000 ELEVON = .000
GRID = 6.000

RUN NO. 273/ 0 GRADIENT INTERVAL = -5.00/ 5.00

DLT-X	DLT-Z	CN	CA	CLM	CY	CYN	CBL	XCP/L	YCP/L	CPB
.469	402.560	-.26512	.12492	-.02060	-.04854	-.00800	.00030	.50404	.44322	.00000
.525	497.160	-.25164	.11649	-.02794	-.04471	-.00888	.00065	.48077	.41957	.00000
.490	599.740	-.23820	.11274	-.03465	-.04151	-.00858	.00035	.45671	.41400	.00000
.515	750.220	-.23948	.11206	-.03428	-.04171	-.00800	.00032	.45833	.42439	.00000
.410	800.120	-.23879	.11209	-.03435	-.04160	-.00790	.00031	.45784	.42564	.00000
	GRADIENT	.00000	.00000	.00000	.00000	.00000	.00000	.00000	.00000	.00000

RUN NO. 272/ 0 GRADIENT INTERVAL = -5.00/ 5.00

DLT-X	DLT-Z	CN	CA	CLM	CY	CYN	CBL	XCP/L	YCP/L	CPB
200.380	401.860	-.26194	.11888	-.02428	-.04866	-.00837	.00020	.49359	.43815	.00000
200.460	500.410	-.26143	.12405	-.02260	-.04698	-.00852	.00031	.49796	.43158	.00000
200.580	600.170	-.24557	.11268	-.03115	-.04334	-.00799	.00038	.46973	.42957	.00000
200.520	750.230	-.23913	.11183	-.03453	-.04173	-.00822	.00035	.45747	.42074	.00000
200.560	800.130	-.23902	.11144	-.03458	-.04147	-.00819	.00032	.45727	.42033	.00000
	GRADIENT	.00000	.00000	.00000	.00000	.00000	.00000	.00000	.00000	.00000

RUN NO. 271/ 0 GRADIENT INTERVAL = -5.00/ 5.00

DLT-X	DLT-Z	CN	CA	CLM	CY	CYN	CBL	XCP/L	YCP/L	CPB
400.330	399.970	-.25587	.11667	-.02920	-.04688	-.00924	.00019	.47862	.42060	.00000
400.350	499.780	-.26186	.12016	-.02512	-.04628	-.00814	.00021	.49132	.43552	.00000
400.460	600.060	-.25580	.11786	-.02605	-.04290	-.00879	.00046	.48719	.41519	.00000
400.520	750.250	-.23897	.11136	-.03504	-.04233	-.00848	.00036	.45591	.41836	.00000
400.430	800.150	-.23805	.11153	-.03476	-.04092	-.00829	.00034	.45633	.41681	.00000
	GRADIENT	.00000	.00000	.00000	.00000	.00000	.00000	.00000	.00000	.00000

DATE 25 JUL 75 TABULATED SOURCE DATA - IA17A

AEDC VA422(IA17) ORB AND ET SEPARATING(ET DATA) (ATR421) (24 JUL 75)

REFERENCE DATA

SREF = 2690.0000 SQ.FT. XMRP = 1360.1000 IN. XT
LREF = 1290.3000 IN. YMRP = .0000 IN. YT
BREF = 1290.3000 IN. ZMRP = 416.4000 IN. ZT
SCALE = .0100

PARAMETRIC DATA

DLT-Y = 200.000 ALPHA = -5.000
BETA = .000 DLTALF = -20.000
DLTBTA = 3.000 MACH = 5.930
AILRON = .000 ELEVON = .000
GRID = 6.000

RUN NO. 267/ 0 GRADIENT INTERVAL = -5.00/ 5.00

DLT-X	DLT-Z	CN	CA	CLM	CY	CYN	CBL	XCP/L	YCP/L	CPB
.416	799.000	-.49296	.14348	-.02740	-.05729	-.00317	.00043	.51951	.51965	.00000
.553	897.530	-.48249	.14549	-.03251	-.05452	-.00494	.00044	.51127	.49508	.00000
.434	1000.100	-.48276	.14526	-.03238	-.05150	-.00483	.00043	.51148	.49276	.00000
	GRADIENT	.00000	.00000	.00000	.00000	.00000	.00000	.00000	.00000	.00000

RUN NO. 265/ 0 GRADIENT INTERVAL = -5.00/ 5.00

DLT-X	DLT-Z	CN	CA	CLM	CY	CYN	CBL	XCP/L	YCP/L	CPB
200.470	754.700	-.57948	.18201	.01292	-.06661	.00057	.00065	.57392	.56430	.00000
200.430	796.720	-.50493	.14730	-.02166	-.05686	-.00468	.00062	.52837	.50085	.00000
200.470	899.200	-.48621	.14463	-.03112	-.05360	-.00470	.00057	.51363	.49704	.00000
200.420	1000.400	-.48279	.14513	-.03267	-.05118	-.00510	.00047	.51106	.48875	.00000
	GRADIENT	.00000	.00000	.00000	.00000	.00000	.00000	.00000	.00000	.00000

RUN NO. 264/ 0 GRADIENT INTERVAL = -5.00/ 5.00

DLT-X	DLT-Z	CN	CA	CLM	CY	CYN	CBL	XCP/L	YCP/L	CPB
400.370	750.710	-.52045	.15885	-.01378	-.05916	-.00410	.00030	.53985	.50994	.00000
400.390	800.420	-.50997	.15834	-.01713	-.05618	-.00490	.00043	.53488	.49736	.00000
400.470	900.330	-.49425	.14392	-.02685	-.05312	-.00396	.00047	.52039	.50631	.00000
400.350	1000.300	-.48196	.14483	-.03292	-.05237	-.00550	.00045	.51062	.48500	.00000
	GRADIENT	.00000	.00000	.00000	.00000	.00000	.00000	.00000	.00000	.00000

DATE 25 JUL 75 TABULATED SOURCE DATA - IA17A

AEDC VA422(IA17) ORB AND ET SEPARATING(ET DATA) (ATR422) (24 JUL 75)

REFERENCE DATA

SREF = 2690.0000 SQ.FT. XMRP = 1360.1000 IN. XT
LREF = 1290.3000 IN. YMRP = .0000 IN. YT
BREF = 1290.3000 IN. ZMRP = 416.4000 IN. ZT
SCALE = .0100

PARAMETRIC DATA

DLT-Y = 200.000 ALPHA = -5.000
BETA = 3.000 DLTALF = .000
DLTBTA = 3.000 MACH = 5.930
AILRON = .000 ELEVON = .000
GRID = 7.000

RUN NO. 315/ 0 GRADIENT INTERVAL = -5.00/ 5.00

DLT-X	DLT-Z	CN	CA	CLM	CY	CYN	CBL	XCP/L	YCP/L	CPB
.596	20.165	-.10615	.10128	-.00508	-.08217	-.01932	.00040	.52494	.39412	.00000
.582	98.705	-.09299	.10005	-.00584	-.07831	-.01781	.00051	.51445	.39942	.00000
.707	198.770	-.08384	.09776	-.00777	-.07452	-.01918	.00055	.49364	.37853	.00000
.702	298.770	-.07675	.09529	-.01191	-.07230	-.02025	.00061	.44994	.36272	.00000
.590	399.230	-.07305	.09490	-.01409	-.07269	-.02067	.00059	.42363	.35966	.00000
.663	500.070	-.07389	.09502	-.01403	-.07248	-.02029	.00057	.42568	.36276	.00000
.627	600.250	-.07450	.09496	-.01389	-.07251	-.02039	.00059	.42807	.36187	.00000
	GRADIENT	.00000	.00000	.00000	.00000	.00000	.00000	.00000	.00000	.00000

RUN NO. 314/ 0 GRADIENT INTERVAL = -5.00/ 5.00

DLT-X	DLT-Z	CN	CA	CLM	CY	CYN	CBL	XCP/L	YCP/L	CPB
200.600	21.696	-.10029	.09979	-.01034	-.08341	-.02056	.00040	.48631	.38616	.00000
200.530	101.760	-.09453	.10015	-.00714	-.07916	-.01881	.00047	.50556	.39238	.00000
200.650	201.850	-.08480	.09722	-.00974	-.07592	-.01880	.00056	.47811	.38537	.00000
200.580	300.590	-.08349	.09856	-.00827	-.07327	-.01982	.00053	.48917	.36934	.00000
200.540	400.130	-.07370	.09414	-.01394	-.07282	-.02079	.00059	.42620	.35888	.00000
200.640	500.110	-.07360	.09488	-.01418	-.07232	-.02072	.00059	.42371	.35815	.00000
200.680	600.120	-.07491	.09451	-.01406	-.07212	-.02040	.00059	.42717	.36071	.00000
	GRADIENT	.00000	.00000	.00000	.00000	.00000	.00000	.00000	.00000	.00000

ORIGINAL PAGE IS OF POOR QUALITY

AEDC VA422(IA17) ORB AND ET SEPARATING(ET DATA) (ATR423) (24 JUL 75)

REFERENCE DATA

SREF = 2690.0000 SQ.FT. XMRP = 1360.1000 IN. XT
LREF = 1290.3000 IN. YMRP = .0000 IN. YT
BREF = 1290.3000 IN. ZMRP = 416.4000 IN. ZT
SCALE = .0100

PARAMETRIC DATA

DLT-Y = 200.000 ALPHA = -5.000
BETA = 3.000 DLTALF = -10.000
DLTBTA = 3.000 MACH = 5.930
AILRON = .000 ELEVON = .000
GRID = 7.000

RUN NO. 311/ 0 GRADIENT INTERVAL = -5.00/ 5.00

DLT-X	DLT-Z	CN	CA	CLM	CY	CYN	CBL	XCP/L	YCP/L	CPB
.461	402.300	-.26412	.12046	-.02017	-.08962	-.01483	.00054	.50498	.44272	.00000
.585	497.250	-.25687	.11873	-.02381	-.08931	-.01567	.00074	.49359	.43575	.00000
.485	599.870	-.24355	.11233	-.03223	-.08842	-.01662	.00067	.46590	.42706	.00000
.560	750.170	-.24296	.11300	-.03220	-.08774	-.01677	.00065	.46574	.42485	.00000
.512	800.180	-.24272	.11295	-.03205	-.08738	-.01665	.00063	.46610	.42520	.00000
	GRADIENT	.00000	.00000	.00000	.00000	.00000	.00000	.00000	.00000	.00000

RUN NO. 310/ 0 GRADIENT INTERVAL = -5.00/ 5.00

DLT-X	DLT-Z	CN	CA	CLM	CY	CYN	CBL	XCP/L	YCP/L	CPB
200.500	401.810	-.25998	.11687	-.02522	-.09045	-.01591	.00057	.49055	.43543	.00000
200.540	500.450	-.26234	.12174	-.02057	-.09012	-.01562	.00061	.50357	.43728	.00000
200.480	600.100	-.25099	.11460	-.02733	-.08971	-.01584	.00070	.48227	.43500	.00000
200.610	750.260	-.24356	.11294	-.03238	-.08661	-.01681	.00063	.46546	.42273	.00000
200.610	800.080	-.24156	.11321	-.03230	-.08656	-.01669	.00063	.46491	.42361	.00000
	GRADIENT	.00000	.00000	.00000	.00000	.00000	.00000	.00000	.00000	.00000

RUN NO. 309/ 0 GRADIENT INTERVAL = -5.00/ 5.00

DLT-X	DLT-Z	CN	CA	CLM	CY	CYN	CBL	XCP/L	YCP/L	CPB
400.400	400.000	-.25264	.11462	-.03092	-.09037	-.01665	.00054	.47284	.42960	.00000
400.370	499.680	-.26025	.11771	-.02402	-.09235	-.01597	.00059	.49387	.43753	.00000
400.330	600.040	-.26050	.12104	-.02205	-.08913	-.01642	.00070	.49920	.42965	.00000
400.520	750.210	-.24244	.11247	-.03263	-.08668	-.01719	.00062	.46432	.41978	.00000
400.560	800.110	-.24249	.11296	-.03249	-.08686	-.01697	.00063	.46473	.42188	.00000
	GRADIENT	.00000	.00000	.00000	.00000	.00000	.00000	.00000	.00000	.00000

AEDC VA422(IA17) ORB AND ET SEPARATIN0(ET DATA) (ATR425) (24 JUL 75)

REFERENCE DATA

SREF = 2690.0000 SQ.FT. XMRP = 1360.1000 IN. XT
LREF = 1290.3000 IN. YMRP = .0000 IN. YT
BREF = 1290.3000 IN. ZMRP = 416.4000 IN. ZT
SCALE = .0100

PARAMETRIC DATA

DLT-Y = 200.000 ALPHA = -5.000
BETA = 3.000 DLTALF = -20.000
DLTBTA = 3.000 MACH = 5.930
AILRON = .000 ELEVON = .000
GRID = 7.000

RUN NO. 305/ 0 GRADIENT INTERVAL = -5.00/ 5.00

DLT-X	DLT-Z	CN	CA	CLM	CY	CYN	CBL	XCP/L	YCP/L	CPB
.403	799.850	-.50334	.14245	-.02068	-.11746	-.00765	.00071	.52966	.51285	.00000
.584	897.000	-.48877	.14582	-.02879	-.11375	-.00987	.00069	.51719	.49771	.00000
.573	1000.000	-.49074	.14668	-.02796	-.11397	-.00969	.00068	.51853	.49896	.00000
	GRADIENT	.00000	.00000	.00000	.00000	.00000	.00000	.00000	.00000	.00000

RUN NO. 303/ 0 GRADIENT INTERVAL = -8.00/ 8.00

DLT-X	DLT-Z	CN	CA	CLM	CY	CYN	CBL	XCP/L	YCP/L	CPB
200.280	754.830	-.57217	.18335	.01834	-.12777	-.00373	.00083	.58198	.53796	.00000
200.470	797.170	-.51816	.15059	-.01300	-.11779	-.00795	.00084	.54081	.51122	.00000
200.490	898.690	-.49527	.14475	-.02611	-.11483	-.00949	.00069	.52151	.50059	.00000
200.500	1000.300	-.49056	.14713	-.02796	-.11300	-.01007	.00065	.51852	.49608	.00000
	GRADIENT	.00000	.00000	.00000	.00000	.00000	.00000	.00000	.00000	.00000

RUN NO. 302/ 0 GRADIENT INTERVAL = -5.00/ 5.00

DLT-X	DLT-Z	CN	CA	CLM	CY	CYN	CBL	XCP/L	YCP/L	CPB
400.430	750.690	-.52449	.15387	-.01125	-.11799	-.00841	.00068	.54336	.50854	.00000
400.430	800.570	-.52047	.15853	-.01184	-.11712	-.00911	.00067	.54245	.50400	.00000
400.420	900.280	-.50613	.14848	-.02011	-.11515	-.00900	.00056	.53059	.50374	.00000
400.370	1000.200	-.49102	.14678	-.02817	-.11200	-.01014	.00066	.51826	.49509	.00000
	GRADIENT	.00000	.00000	.00000	.00000	.00000	.00000	.00000	.00000	.00000

ORIGINAL PAGE IS OF POOR QUALITY

AEDC VA422(IA17) ORB AND ET SEPARATING(ET DATA) (ATRN26) (24 JUL 75)

REFERENCE DATA

SREF = 2690.0000 SQ.FT. XMRP = 1360.1000 IN. XT
LREF = 1290.3000 IN. YMRP = .0000 IN. YT
BREF = 1290.3000 IN. ZMRP = 418.4000 IN. ZT
SCALE = .0100

PARAMETRIC DATA

DLT-Y = 200.000 ALPHA = -10.000
BETA = 3.000 DLTALF = .000
DLTBTA = 3.000 MACH = 5.930
AILRON = .000 ELEVON = .000
GRID = 8.000

RUN NO. 342/ 0 GRADIENT INTERVAL = -5.00/ 5.00

DLT-X	DLT-Z	CN	CA	CLM	CY	CYN	CBL	XCP/L	YCP/L	CPB
.519	30.732	-.17518	.10903	-.01989	-.08386	-.02022	.00032	.47899	.38931	.00000
.497	98.142	-.16259	.10491	-.02282	-.08190	-.01870	.00047	.46026	.39878	.00000
.528	198.330	-.16068	.10488	-.02192	-.08256	-.01735	.00044	.46303	.41150	.00000
.536	298.660	-.16355	.10902	-.01805	-.08240	-.01824	.00054	.48123	.40356	.00000
.548	400.080	-.15452	.10231	-.02457	-.07897	-.01861	.00058	.44723	.39372	.00000
.552	500.220	-.15245	.10297	-.02597	-.07947	-.01879	.00057	.43932	.39313	.00000
	GRADIENT	.00000	.00000	.00000	.00000	.00000	.00000	.00000	.00000	.00000

RUN NO. 341/ 0 GRADIENT INTERVAL = -5.00/ 5.00

DLT-X	DLT-Z	CN	CA	CLM	CY	CYN	CBL	XCP/L	YCP/L	CPB
200.410	31.739	-.16436	.10296	-.02908	-.08171	-.02147	.00048	.43473	.37476	.00000
200.530	102.210	-.16081	.10386	-.02653	-.08224	-.02033	.00039	.44310	.38567	.00000
200.480	201.570	-.15709	.10239	-.02689	-.08276	-.01892	.00046	.43878	.39866	.00000
200.490	300.470	-.16246	.10567	-.02116	-.08273	-.01768	.00050	.46736	.40901	.00000
200.560	400.150	-.16374	.10843	-.01913	-.08044	-.01881	.00058	.47671	.39501	.00000
200.540	500.160	-.15253	.10320	-.02571	-.07854	-.01886	.00057	.44059	.39058	.00000
	GRADIENT	.00000	.00000	.00000	.00000	.00000	.00000	.00000	.00000	.00000

AEDC VA422(IA17) ORB AND ET SEPARATING(ET DATA) (ATR427) (24 JUL 75)

REFERENCE DATA

SREF = 2690.0000 SQ.FT. XMRP = 1360.1000 IN. XT
LREF = 1290.3000 IN. YMRP = .0000 IN. YT
BREF = 1290.3000 IN. ZMRP = 416.4000 IN. ZT
SCALE = .0100

PARAMETRIC DATA

DLT-Y = 200.000 ALPHA = -10.000
BETA = 3.000 DLTALF = -10.000
DLTBTA = 3.000 MACH = 5.930
AILRON = .000 ELEVON = .000
GRID = 8.000

RUN NO. 338/ 0 GRADIENT INTERVAL = -5.00/ 5.00

DLT-X	DLT-Z	CN	CA	CLM	CY	CYN	CBL	XCP/L	YCP/L	CPB
.363	403.110	-.37054	.13386	-.02774	-.10350	-.01323	.00033	.50605	.46905	.00000
.455	497.460	-.38144	.13728	-.01820	-.10358	-.01240	.00064	.52501	.47472	.00000
.468	599.340	-.37444	.13388	-.02272	-.10210	-.01253	.00078	.51595	.47262	.00000
.482	700.040	-.36107	.12929	-.03037	-.09943	-.01361	.00077	.49958	.46273	.00000
.446	800.130	-.35844	.12943	-.03122	-.09855	-.01354	.00073	.49750	.46237	.00000
	GRADIENT	.00000	.00000	.00000	.00000	.00000	.00000	.00000	.00000	.00000

RUN NO. 337/ 0 GRADIENT INTERVAL = -5.00/ 5.00

DLT-X	DLT-Z	CN	CA	CLM	CY	CYN	CBL	XCP/L	YCP/L	CPB
200.490	401.330	-.34921	.12487	-.04229	-.09919	-.01626	.00031	.47374	.44381	.00000
200.630	500.660	-.36886	.12986	-.02930	-.10174	-.01338	.00049	.50284	.46644	.00000
200.440	600.530	-.38103	.13876	-.01916	-.10122	-.01290	.00066	.52321	.46933	.00000
200.430	700.250	-.37135	.13223	-.02433	-.09947	-.01239	.00070	.51256	.47133	.00000
200.470	800.200	-.35762	.12914	-.03130	-.09806	-.01372	.00071	.49719	.46056	.00000
	GRADIENT	.00000	.00000	.00000	.00000	.00000	.00000	.00000	.00000	.00000

RUN NO. 336/ 0 GRADIENT INTERVAL = -5.00/ 5.00

DLT-X	DLT-Z	CN	CA	CLM	CY	CYN	CBL	XCP/L	YCP/L	CPB
400.440	399.990	-.33117	.11990	-.05332	-.09598	-.01853	.00037	.44586	.42348	.00000
400.380	499.910	-.35406	.12551	-.03866	-.10094	-.01468	.00049	.48206	.45672	.00000
400.560	600.270	-.37390	.13346	-.02563	-.10193	-.01333	.00063	.51045	.46696	.00000
400.410	700.170	-.37912	.13848	-.01907	-.10091	-.01348	.00073	.52320	.46503	.00000
400.410	800.260	-.36703	.12958	-.02637	-.09999	-.01297	.00068	.50816	.46769	.00000
	GRADIENT	.00000	.00000	.00000	.00000	.00000	.00000	.00000	.00000	.00000

AEDC VA422(IA17) ORB AND ET SEPARATING(ET DATA) (ATR428) (24 JUL 75)

REFERENCE DATA

SREF = 2690.0000 SQ.FT. XMRP = 1360.1000 IN. XT
LREF = 1290.3000 IN. YMRP = .0000 IN. YT
BREF = 1290.3000 IN. ZMRP = 416.4000 IN. ZT
SCALE = .0100

PARAMETRIC DATA

DLT-Y = 200.000 ALPHA = -10.000
BETA = .000 DLTALF = .000
DLTBTA = 3.000 MACH = 5.930
AILRON = .000 ELEVON = .000
GRID = 9.000

RUN NO. 370/ 0 GRADIENT INTERVAL = -5.00/ 5.00

DLT-X	DLT-Z	CN	CA	CLM	CY	CYN	CBL	XCP/L	YCP/L	CPB
.443	30.704	-.18109	.11370	-.01687	-.04466	-.01227	.00021	.49325	.36646	.00000
.436	98.419	-.16155	.10596	-.02277	-.04175	-.01056	.00017	.45987	.38169	.00000
.456	198.490	-.16163	.10701	-.02116	-.04182	-.00990	.00011	.46688	.39294	.00000
.513	298.520	-.16182	.10974	-.01906	-.03859	-.00986	.00036	.47606	.37988	.00000
.448	399.960	-.15138	.10149	-.02609	-.03757	-.00946	.00038	.43792	.38248	.00000
.474	500.110	-.14895	.10163	-.02717	-.03717	-.00956	.00032	.43089	.37860	.00000
	GRADIENT	.00000	.00000	.00000	.00000	.00000	.00000	.00000	.00000	.00000

RUN NO. 369/ 0 GRADIENT INTERVAL = -5.00/ 5.00

DLT-X	DLT-Z	CN	CA	CLM	CY	CYN	CBL	XCP/L	YCP/L	CPB
200.550	31.402	-.16190	.10371	-.03020	-.03961	-.01330	.00017	.42805	.32376	.00000
200.440	102.280	-.16395	.10547	-.02620	-.04094	-.01228	.00013	.44669	.34880	.00000
200.530	201.630	-.16116	.10455	-.02589	-.04080	-.01121	.00016	.44612	.36637	.00000
200.510	300.420	-.16418	.10786	-.02110	-.04003	-.00950	.00017	.46855	.39254	.00000
200.420	400.130	-.16008	.10697	-.02063	-.03720	-.00947	.00044	.46832	.38047	.00000
200.390	500.160	-.14886	.10077	-.02720	-.03686	-.00950	.00036	.43067	.37837	.00000
	GRADIENT	.00000	.00000	.00000	.00000	.00000	.00000	.00000	.00000	.00000

AEDC VA422(IA17) ORB AND ET SEPARATING(ET DATA) (ATR429) (24 JUL 75)

REFERENCE DATA

SREF = 2690.0000 SQ.FT. XMRP = 1360.1000 IN. XT
LREF = 1290.3000 IN. YMRP = .0000 IN. YT
BREF = 1290.3000 IN. ZMRP = 416.4000 IN. ZT
SCALE = .0100

PARAMETRIC DATA

DLT-Y = 200.000 ALPHA = -10.000
BETA = .000 DLTALF = -10.000
DLTBTA = 3.000 MACH = 5.930
AILRON = .000 ELEVON = .000
GRID = 9.000

RUN NO. 366/ 0 GRADIENT INTERVAL = -5.00/ 5.00

DLT-X	DLT-Z	CN	CA	CLM	CY	CYN	CBL	XCP/L	YCP/L	CPB
.306	403.270	-.37756	.13703	-.02438	-.05008	-.00691	-.00017	.51322	.46197	.00000
.406	497.190	-.37927	.14114	-.01904	-.05186	-.00550	.00020	.52326	.48419	.00000
.431	599.480	-.36553	.12742	-.02732	-.04808	-.00584	.00052	.50612	.47342	.00000
.476	699.990	-.35273	.12557	-.03447	-.04772	-.00652	.00035	.49007	.46289	.00000
.460	800.170	-.35132	.12686	-.03441	-.04723	-.00654	.00029	.48992	.46167	.00000
	GRADIENT	.00000	.00000	.00000	.00000	.00000	.00000	.00000	.00000	.00000

RUN NO. 365/ 0 GRADIENT INTERVAL = -5.00/ 5.00

DLT-X	DLT-Z	CN	CA	CLM	CY	CYN	CBL	XCP/L	YCP/L	CPB
200.430	401.430	-.35872	.12877	-.03769	-.04690	-.00945	-.00020	.48494	.41761	.00000
200.520	500.780	-.37292	.13245	-.02689	-.05059	-.00684	.00006	.50797	.46381	.00000
200.390	600.460	-.37371	.13817	-.02189	-.05017	-.00561	.00028	.51742	.48027	.00000
200.430	700.210	-.36084	.12613	-.02969	-.04822	-.00586	.00037	.50085	.47338	.00000
200.410	800.190	-.35092	.12660	-.03499	-.04722	-.00647	.00027	.48868	.46265	.00000
	GRADIENT	.00000	.00000	.00000	.00000	.00000	.00000	.00000	.00000	.00000

RUN NO. 364/ 0 GRADIENT INTERVAL = -5.00/ 5.00

DLT-X	DLT-Z	CN	CA	CLM	CY	CYN	CBL	XCP/L	YCP/L	CPB
400.430	400.000	-.33977	.12465	-.04918	-.04371	-.01168	.00000	.45722	.37162	.00000
400.390	499.770	-.35480	.12552	-.03840	-.04809	-.00789	.00007	.48273	.44370	.00000
400.260	600.140	-.37110	.13430	-.02552	-.04916	-.00649	.00017	.51030	.46617	.00000
400.420	700.310	-.37212	.13578	-.02293	-.04760	-.00672	.00034	.51530	.45972	.00000
400.350	800.250	-.35778	.12557	-.03153	-.04788	-.00596	.00026	.49677	.47138	.00000
	GRADIENT	.00000	.00000	.00000	.00000	.00000	.00000	.00000	.00000	.00000

AEDC VA422(IA17) ORB AND ET SEPARATING(ET DATA) (ATR430) (24 JUL 75)

REFERENCE DATA

SREF = 2890.0000 SQ.FT. XMRP = 1380.1000 IN. XT
LREF = 1290.3000 IN. YMRP = .0000 IN. YT
BREF = 1290.3000 IN. ZMRP = 416.4000 IN. ZT
SCALE = .0100

PARAMETRIC DATA

DLT-Y = 200.000 ALPHA = 10.000
BETA = .000 DLTALF = -10.000
DLTBTA = 3.000 MACH = 5.930
AILRON = .000 ELEVON = .000
GRID = 23.000

RUN NO. 671/ 0 GRADIENT INTERVAL = -5.00/ 5.00

DLT-X	DLT-Z	CN	CA	CLM	CY	CYN	CBL	XCP/L	YCP/L	CPB
.475	399.870	-.02580	.08862	.01425	-.03717	-.01035	.00043	.94433	.36380	.00000
.874	500.220	-.00603	.08515	.00333	-.03311	-.01159	.00026	.94363	.31367	.00000
.639	598.970	-.00546	.08766	.00317	-.03327	-.01144	.00027	.96396	.31803	.00000
.685	698.920	-.00582	.08833	.00294	-.03499	-.01167	.00027	.91065	.32538	.00000
.566	798.110	-.00623	.08825	.00297	-.03595	-.01198	.00029	.89106	.32561	.00000
	GRADIENT	.00000	.00000	.00000	.00000	.00000	.00000	.00000	.00000	.00000

RUN NO. 670/ 0 GRADIENT INTERVAL = -5.00/ 5.00

DLT-X	DLT-Z	CN	CA	CLM	CY	CYN	CBL	XCP/L	YCP/L	CPB
200.500	400.910	-.03668	.09372	.02064	-.03631	-.01021	.00046	.95172	.36180	.00000
200.600	501.010	-.00608	.08484	.00294	-.03382	-.01175	.00025	.89627	.31549	.00000
200.570	602.090	-.00707	.08824	.00286	-.03428	-.01158	.00027	.84060	.32233	.00000
200.570	700.400	-.00653	.08843	.00267	-.03452	-.01138	.00026	.84386	.32805	.00000
200.660	799.940	-.00594	.08834	.00304	-.03524	-.01195	.00028	.91558	.32143	.00000
	GRADIENT	.00000	.00000	.00000	.00000	.00000	.00000	.00000	.00000	.00000

RUN NO. 669/ 0 GRADIENT INTERVAL = -5.00/ 5.00

DLT-X	DLT-Z	CN	CA	CLM	CY	CYN	CBL	XCP/L	YCP/L	CPB
400.580	398.380	-.05600	.10270	.03113	-.03264	-.01037	.00048	.94670	.33631	.00000
400.610	499.310	-.00639	.08416	.00312	-.03436	-.01177	.00027	.89942	.31897	.00000
400.470	597.760	-.00618	.08798	.00291	-.03467	-.01178	.00027	.88699	.32139	.00000
400.520	699.550	-.00671	.08770	.00294	-.03495	-.01165	.00026	.86500	.32553	.00000
400.580	799.980	-.00614	.08845	.00324	-.03632	-.01251	.00029	.92732	.31770	.00000
	GRADIENT	.00000	.00000	.00000	.00000	.00000	.00000	.00000	.00000	.00000

AEDC VA422(IA17) ORB AND ET SEPARATING(ET DATA) (ATR431) (24 JUL 75)

REFERENCE DATA

SREF = 2690.0000 SQ.FT. XMRP = 1360.1000 IN. XT
LREF = 1290.3000 IN. YMRP = .0000 IN. YT
BREF = 1290.3000 IN. ZMRP = 416.4000 IN. ZT
SCALE = .0100

PARAMETRIC DATA

DLT-Y = 200.000 ALPHA = 10.000
BETA = .000 DLTALF = -20.000
DLTBTA = 3.000 MACH = 5.930
AILRON = .000 ELEVON = .000
GRID = 23.000

RUN NO. 665/ 0 GRADIENT INTERVAL = -5.00/ 5.00

DLT-X	DLT-Z	CN	CA	CLM	CY	CYN	CBL	XCP/L	YCP/L	CPB
.437	802.940	-.13653	.09763	-.02592	-.03551	-.00952	.00026	.42568	.37101	.00000
.460	897.370	-.13624	.09885	-.02591	-.03825	-.01025	.00030	.42548	.37119	.00000
.498	998.920	-.13733	.09921	-.02614	-.03762	-.01013	.00029	.42537	.37015	.00000
	GRADIENT	.00000	.00000	.00000	.00000	.00000	.00000	.00000	.00000	.00000

RUN NO. 684/ 0 GRADIENT INTERVAL = -5.00/ 5.00

DLT-X	DLT-Z	CN	CA	CLM	CY	CYN	CBL	XCP/L	YCP/L	CPB
200.440	801.560	-.13838	.09775	-.02585	-.03659	-.00973	.00028	.42587	.37252	.00000
200.430	899.940	-.13602	.09867	-.02583	-.03769	-.01014	.00028	.42566	.37032	.00000
200.560	1000.000	-.13854	.09922	-.02622	-.03814	-.01045	.00029	.42614	.36697	.00000
	GRADIENT	.00000	.00000	.00000	.00000	.00000	.00000	.00000	.00000	.00000

RUN NO. 663/ 0 GRADIENT INTERVAL = -5.00/ 5.00

DLT-X	DLT-Z	CN	CA	CLM	CY	CYN	CBL	XCP/L	YCP/L	CPB
400.530	800.230	-.13693	.09818	-.02554	-.03735	-.00992	.00028	.42801	.37284	.00000
400.330	900.080	-.13732	.09891	-.02589	-.03868	-.01038	.00030	.42662	.37083	.00000
400.470	1000.100	-.13731	.09960	-.02642	-.03894	-.01092	.00031	.42393	.36247	.00000
	GRADIENT	.00000	.00000	.00000	.00000	.00000	.00000	.00000	.00000	.00000

ORIGINAL PAGE IS OF POOR QUALITY

AEDC VA422(IA17) ORB AND ET SEPARATING(ET DATA) (ATR432) (24 JUL 75)

REFERENCE DATA

SREF = 2690.0000 SQ.FT. XMRP = 1360.1000 IN. XT
LREF = 1290.3000 IN. YMRP = .0000 IN. YT
BREF = 1290.3000 IN. ZMRP = 416.4000 IN. ZT
SCALE = .0100

PARAMETRIC DATA

DLT-Y = 200.000 ALPHA = 10.000
BETA = 3.000 DLTALF = -10.000
DLTBTA = 3.000 MACH = 5.930
AILRON = .000 ELEVON = .000
GRID = 27.000

RUN NO. 701/ 0 GRADIENT INTERVAL = -5.00/ 5.00

DLT-X	DLT-Z	CN	CA	CLM	CY	CYN	CBL	XCP/L	YCP/L	CPB
.487	400.600	-.02682	.09161	.01304	-.07073	-.02160	.00054	.89807	.34501	.00000
.658	499.440	-.00694	.08706	.00240	-.07275	-.02209	.00055	.79974	.34621	.00000
.514	598.580	-.00592	.08966	.00245	-.07289	-.02198	.00056	.84711	.34764	.00000
.666	698.920	-.00645	.09011	.00227	-.07319	-.02184	.00056	.80445	.34991	.00000
.678	798.380	-.00668	.09029	.00194	-.07403	-.02162	.00056	.76166	.35434	.00000
	GRADIENT	.00000	.00000	.00000	.00000	.00000	.00000	.00000	.00000	.00000

RUN NO. 700/ 0 GRADIENT INTERVAL = -5.00/ 5.00

DLT-X	DLT-Z	CN	CA	CLM	CY	CYN	CBL	XCP/L	YCP/L	CPB
200.500	401.300	-.03655	.09751	.01884	-.07179	-.02183	.00047	.91859	.34594	.00000
200.640	501.080	-.00666	.08705	.00195	-.07219	-.02204	.00054	.76251	.34508	.00000
200.600	601.640	-.00633	.09025	.00212	-.07334	-.02209	.00055	.79249	.34788	.00000
200.580	700.340	-.00638	.09026	.00188	-.07408	-.02206	.00056	.76462	.35031	.00000
200.590	800.000	-.00698	.09006	.00178	-.07335	-.02151	.00055	.73677	.35344	.00000
	GRADIENT	.00000	.00000	.00000	.00000	.00000	.00000	.00000	.00000	.00000

RUN NO. 699/ 0 GRADIENT INTERVAL = -5.00/ 5.00

DLT-X	DLT-Z	CN	CA	CLM	CY	CYN	CBL	XCP/L	YCP/L	CPB
400.640	398.430	-.05223	.10577	.02831	-.07060	-.02055	.00040	.93700	.35502	.00000
400.580	499.170	-.00682	.08666	.00216	-.07234	-.02208	.00054	.77965	.34507	.00000
400.610	598.180	-.00709	.09030	.00220	-.07306	-.02188	.00055	.77534	.34913	.00000
400.590	699.360	-.00646	.09026	.00193	-.07382	-.02188	.00056	.76726	.35126	.00000
400.660	800.080	-.00694	.09038	.00183	-.07405	-.02180	.00056	.74278	.35269	.00000
	GRADIENT	.00000	.00000	.00000	.00000	.00000	.00000	.00000	.00000	.00000

AEDC VA422(IA17) ORB AND ET SEPARATING(ET DATA) (ATR433) (24 JUL 75)

REFERENCE DATA

SREF = 2690.0000 SQ.FT. XMRP = 1360.1000 IN. XT
LREF = 1290.3000 IN. YMRP = .0000 IN. YT
BREF = 1290.3000 IN. ZMRP = 416.4000 IN. ZT
SCALE = .0100

PARAMETRIC DATA

DLT-Y 200.000 ALPHA = 10.000
BETA = 3.000 DLTALF = -20.000
DLTBTA = 3.000 MACH = 5.930
AILRON = .000 ELEVON = .000
GRID = 27.000

RUN NO. 695/ 0 GRADIENT INTERVAL = -5.00/ 5.00

DLT-X	DLT-Z	CN	CA	CLM	CY	CYN	CBL	XCP/L	YCP/L	CPB
.497	802.460	-.14221	.09951	-.02530	-.07898	-.02012	.00053	.43403	.38036	.00000
.504	897.890	-.14216	.10029	-.02535	-.07972	-.01987	.00054	.43374	.38419	.00000
.609	998.840	-.14032	.10026	-.02552	-.08038	-.01976	.00055	.43127	.38659	.00000
	GRADIENT	.00000	.00000	.00000	.00000	.00000	.00000	.00000	.00000	.00000

RUN NO. 694/ 0 GRADIENT INTERVAL = -5.00/ 5.00

DLT-X	DLT-Z	CN	CA	CLM	CY	CYN	CBL	XCP/L	YCP/L	CPB
200.510	801.600	-.14143	.10019	-.02528	-.08078	-.02013	.00054	.43346	.38420	.00000
200.620	900.050	-.14224	.10047	-.02544	-.08049	-.01992	.00054	.43337	.38546	.00000
200.590	1000.000	-.14121	.10049	-.02553	-.08138	-.01982	.00055	.43203	.38816	.00000
	GRADIENT	.00000	.00000	.00000	.00000	.00000	.00000	.00000	.00000	.00000

RUN NO. 693/ 0 GRADIENT INTERVAL = -5.00/ 5.00

DLT-X	DLT-Z	CN	CA	CLM	CY	CYN	CBL	XCP/L	YCP/L	CPB
400.640	800.160	-.14229	.10011	-.02520	-.07995	-.01989	.00054	.43462	.38456	.00000
400.640	900.000	-.14172	.10031	-.02554	-.07960	-.01970	.00053	.43245	.38542	.00000
400.570	1000.100	-.14261	.10011	-.02549	-.08057	-.01987	.00054	.43348	.38604	.00000
	GRADIENT	.00000	.00000	.00000	.00000	.00000	.00000	.00000	.00000	.00000

AEDC VA422(IA17) ISOLATED EXTERNAL TANK (ATR551) (22 JUL 75)

REFERENCE DATA

SREF = 2690.0000 SQ.FT. XMRP = 1360.1000 IN. XT
LREF = 1290.3000 IN. YMRP = .0000 IN. YT
BREF = 1290.3000 IN. ZMRP = 416.4000 IN. ZT
SCALE = .0100

PARAMETRIC DATA

MACH = 5.930 GRID = 15.000

RUN NO. 449/ 0 GRADIENT INTERVAL = -5.00/ 5.00

ALPHA	BETA	CN	CA	CLM	CY	CYN	CBL	XCP/L	YCP/L	CPB
-24.983	-.009	-.47115	.14746	-.03493	.00838	.00018	.00047	.50654	.54311	.00000
-24.985	3.029	-.47519	.14545	-.03409	-.05333	-.00542	.00044	.50822	.48735	.00000
-24.980	6.025	-.48621	.14872	-.02976	-.11225	-.01083	.00069	.51558	.49093	.00000
	GRADIENT	-.00133	-.00066	.00028	-.02031	-.00184	-.00001	.00055	-.01835	.00000

ORIGINAL PAGE IS OF POOR QUALITY

AEDC VA422(IA17) ISOLATED EXTERNAL TANK (ATR551) (22 JUL 75)

REFERENCE DATA

SREF = 2690.0000 SQ.FT. XMRP = 1360.1000 IN. XT
LREF = 1290.3000 IN. YMRP = .0000 IN. YT
BREF = 1290.3000 IN. ZMRP = 416.4000 IN. ZT
SCALE = .0100

PARAMETRIC DATA

MACH = 5.930 GRID = 15.000

RUN NO. 443/ 0 GRADIENT INTERVAL = -5.00/ 5.00

ALPHA	BETA	CN	CA	CLM	CY	CYN	CBL	XCP/L	YCP/L	CPB
-19.986	-.005	-.34153	.12628	-.03849	.00577	.00022	.00034	.47961	.00000	.00000
-19.987	3.027	-.34578	.12657	-.03698	-.04775	-.00667	.00031	.48363	.46081	.00000
-19.981	6.029	-.35438	.12989	-.03357	-.09714	-.01483	.00070	.49215	.45170	.00000
	GRADIENT	-.00140	.00010	.00050	-.01765	-.00227	-.00001	.00133	.15198	.00000

RUN NO. 444/ 0 GRADIENT INTERVAL = -5.00/ 5.00

ALPHA	BETA	CN	CA	CLM	CY	CYN	CBL	XCP/L	YCP/L	CPB
-14.983	-.008	-.23119	.11179	-.03701	.00382	.00056	.00017	.44651	.00000	.00000
-14.990	3.029	-.23489	.11289	-.03538	-.04270	-.00843	.00033	.45311	.42047	.00000
-14.984	6.033	-.23970	.11553	-.03381	-.08660	-.01740	.00068	.45981	.41794	.00000
	GRADIENT	-.00122	.00036	.00054	-.01532	-.00296	.00005	.00217	.13847	.00000

RUN NO. 445/ 0 GRADIENT INTERVAL = -5.00/ 5.00

ALPHA	BETA	CN	CA	CLM	CY	CYN	CBL	XCP/L	YCP/L	CPB
-9.992	-.005	-.14023	.10154	-.02949	.00276	.00051	.00005	.41142	.00000	.00000
-9.985	3.029	-.14442	.10307	-.02827	-.03843	-.00993	.00032	.42161	.37777	.00000
-9.992	6.030	-.14650	.10392	-.02763	-.07921	-.01970	.00057	.42658	.38461	.00000
	GRADIENT	-.00138	.00050	.00040	-.01357	-.00344	.00009	.00336	.12448	.00000

RUN NO. 446/ 0 GRADIENT INTERVAL = -5.00/ 5.00

ALPHA	BETA	CN	CA	CLM	CY	CYN	CBL	XCP/L	YCP/L	CPB
-5.044	-.016	-.07210	.09483	-.01761	.00332	.00049	.00006	.38772	.00000	.00000
-4.983	3.034	-.07024	.09858	-.01570	-.03460	-.01138	.00034	.40215	.32858	.00000
-4.993	6.030	-.07341	.09892	-.01545	-.07295	-.02137	.00062	.41128	.35365	.00000
	GRADIENT	.00061	.00123	.00062	-.01244	-.00389	.00009	.00473	.10776	.00000

RUN NO. 447/ 0 GRADIENT INTERVAL = -5.00/ 5.00

ALPHA	BETA	CN	CA	CLM	CY	CYN	CBL	XCP/L	YCP/L	CPB
.017	-.013	-.01005	.09384	.00076	.00272	.00003	.00006	.61107	.00000	.00000
.011	3.032	-.00976	.09439	.00120	-.03527	-.01244	.00034	.64439	.31191	.00000
.012	6.031	-.00932	.09494	.00086	-.07280	-.02233	.00059	.62273	.34408	.00000
	GRADIENT	.00010	.00018	.00015	-.01248	-.00410	.00009	.01094	.10244	.00000

AEDC VA422(IA17) ISOLATED EXTERNAL TANK (ATR551) (22 JUL 75)

REFERENCE DATA

SREF = 2690.0000 SQ.FT. XMRP = 1360.1000 IN. XT
LREF = 1290.3000 IN. YMRP = .0000 IN. YT
BREF = 1290.3000 IN. ZMRP = 416.4000 IN. ZT
SCALE = .0100

PARAMETRIC DATA

MACH = 5.930 GRID = 15.000

RUN NO. 448/ 0 GRADIENT INTERVAL = -5.00/ 5.00

ALPHA	BETA	CN	CA	CLM	CY	CYN	CBL	XCP/L	YCP/L	CPB
5.080	-.012	.05604	.09090	.02079	.00130	-.00040	.00006	.29916	.00000	.00000
5.008	3.033	.05222	.09332	.02004	-.03607	-.01154	.00036	.29030	.33482	.00000
5.008	6.033	.05395	.09441	.01977	-.07627	-.02216	.00068	.30228	.35538	.00000
	GRADIENT	-.00125	.00079	-.00025	-.01227	-.00366	.00010	-.00291	.10995	.00000

AEDC VA422(IA17) ISOLATED EXTERNAL TANK (ATR552) (22 JUL 75)

REFERENCE DATA

SREF = 2690.0000 SQ.FT. XMRP = 1360.1000 IN. XT
LREF = 1290.3000 IN. YMRP = .0000 IN. YT
BREF = 1290.3000 IN. ZMRP = 416.4000 IN. ZT
SCALE = .0100

PARAMETRIC DATA

MACH = 5.930 GRID = 15.000

RUN NO. 455/ 0 GRADIENT INTERVAL = -5.00/ 5.00

ALPHA	BETA	CN	CA	CLM	CY	CYN	CBL	XCP/L	YCP/L	CPB
-24.982	-.005	-.47318	.14449	-.03532	.00676	-.00039	.00047	.50620	.00000	.00000
	GRADIENT	.00000	.00000	.00000	.00000	.00000	.00000	.00000	.00000	.00000

RUN NO. 456/ 0 GRADIENT INTERVAL = -5.00/ 5.00

ALPHA	BETA	CN	CA	CLM	CY	CYN	CBL	XCP/L	YCP/L	CPB
-19.983	-.007	-.34338	.12416	-.03883	.00502	-.00002	.00034	.47934	.00000	.00000
	GRADIENT	.00000	.00000	.00000	.00000	.00000	.00000	.00000	.00000	.00000

RUN NO. 457/ 0 GRADIENT INTERVAL = -5.00/ 5.00

ALPHA	BETA	CN	CA	CLM	CY	CYN	CBL	XCP/L	YCP/L	CPB
-14.987	-.003	-.23313	.10969	-.03735	.00258	.00022	.00018	.44641	.00000	.00000
	GRADIENT	.00000	.00000	.00000	.00000	.00000	.00000	.00000	.00000	.00000

RUN NO. 458/ 0 GRADIENT INTERVAL = -5.00/ 5.00

ALPHA	BETA	CN	CA	CLM	CY	CYN	CBL	XCP/L	YCP/L	CPB
-9.983	-.002	-.14233	.09936	-.02992	.00125	-.00005	.00008	.41149	.00000	.00000
	GRADIENT	.00000	.00000	.00000	.00000	.00000	.00000	.00000	.00000	.00000

AEDC VA422(IA17) ISOLATED EXTERNAL TANK (ATR552) (22 JUL 75)

REFERENCE DATA

SREF = 2690.0000 SQ.FT. XMRP = 1360.1000 IN. XT
LREF = 1290.3000 IN. YMRP = .0000 IN. YT
BREF = 1290.3000 IN. ZMRP = 416.4000 IN. ZT
SCALE = .0100

PARAMETRIC DATA

MACH = 5.930 GRID = 15.000

RUN NO. 459/ 0 GRADIENT INTERVAL = -5.00/ 5.00

ALPHA	BETA	CN	CA	CLM	CY	CYN	CBL	XCP/L	YCP/L	CPB
-5.053	-.008	-.07428	.09221	-.01814	.00095	-.00030	.00007	.38769	.00000	.00000
	GRADIENT	.00000	.00000	.00000	.00000	.00000	.00000	.00000	.00000	.00000

RUN NO. 460/ 0 GRADIENT INTERVAL = -5.00/ 5.00

ALPHA	BETA	CN	CA	CLM	CY	CYN	CBL	XCP/L	YCP/L	CPB
-.001	-.002	-.01189	.09152	.00028	-.00140	-.00110	.00009	.57497	.00000	.00000
	GRADIENT	.00000	.00000	.00000	.00000	.00000	.00000	.00000	.00000	.00000

RUN NO. 461/ 0 GRADIENT INTERVAL = -5.00/ 5.00

ALPHA	BETA	CN	CA	CLM	CY	CYN	CBL	XCP/L	YCP/L	CPB
5.069	-.008	.05438	.08870	.02038	-.00112	-.00123	.00008	.29669	.00000	.00000
	GRADIENT	.00000	.00000	.00000	.00000	.00000	.00000	.00000	.00000	.00000

AEDC VA422(IA17) ISOLATED EXTERNAL TANK (ATR553) (22 JUL 75)

REFERENCE DATA

SREF = 2690.0000 SQ.FT. XMRP = 1360.1000 IN. XT
LREF = 1290.3000 IN. YMRP = .0000 IN. YT
BREF = 1290.3000 IN. ZMRP = 416.4000 IN. ZT
SCALE = .0100

PARAMETRIC DATA

MACH = 5.930 GRID = 15.000

RUN NO. 526/ 0 GRADIENT INTERVAL = -5.00/ 5.00

ALPHA	BETA	CN	CA	CLM	CY	CYN	CBL	XCP/L	YCP/L	CPB
-24.983	-.010	-.47273	.14482	-.03497	.00752	-.00008	.00048	.50667	.56620	.00000
	GRADIENT	.00000	.00000	.00000	.00000	.00000	.00000	.00000	.00000	.00000

RUN NO. 527/ 0 GRADIENT INTERVAL = -5.00/ 5.00

ALPHA	BETA	CN	CA	CLM	CY	CYN	CBL	XCP/L	YCP/L	CPB
-19.986	-.011	-.34371	.12425	-.03841	.00478	-.00008	.00036	.48027	.00000	.00000
	GRADIENT	.00000	.00000	.00000	.00000	.00000	.00000	.00000	.00000	.00000

AEDC VA422(1A17) ISOLATED EXTERNAL TANK (ATR553) (22 JUL 75)

REFERENCE DATA

SREF = 2690.0000 SQ.FT. XMRP = 1380.1000 IN. XT
LREF = 1290.3000 IN. YMRP = .0000 IN. YT
BREF = 1290.3000 IN. ZMRP = 416.4000 IN. ZT
SCALE = .0100

PARAMETRIC DATA

MACH = 5.930 GRID = 15.000

RUN NO. 528/ 0 GRADIENT INTERVAL = -5.00/ 5.00

ALPHA	BETA	CN	CA	CLM	CY	CYN	CBL	XCP/L	YCP/L	CPB
-14.989	-.009	-.23389	.10908	-.03686	.00294	.00034	.00017	.44824	.00000	.00000
	GRADIENT	.00000	.00000	.00000	.00000	.00000	.00000	.00000	.00000	.00000

RUN NO. 529/ 0 GRADIENT INTERVAL = -5.00/ 5.00

ALPHA	BETA	CN	CA	CLM	CY	CYN	CBL	XCP/L	YCP/L	CPB
-9.985	-.009	-.14230	.09911	-.02939	.00097	.00016	.00006	.41406	.00000	.00000
	GRADIENT	.00000	.00000	.00000	.00000	.00000	.00000	.00000	.00000	.00000

RUN NO. 530/ 0 GRADIENT INTERVAL = -5.00/ 5.00

ALPHA	BETA	CN	CA	CLM	CY	CYN	CBL	XCP/L	YCP/L	CPB
-5.053	-.009	-.07473	.09234	-.01761	.00109	-.00045	.00006	.39368	.00000	.00000
	GRADIENT	.00000	.00000	.00000	.00000	.00000	.00000	.00000	.00000	.00000

RUN NO. 531/ 0 GRADIENT INTERVAL = -5.00/ 5.00

ALPHA	BETA	CN	CA	CLM	CY	CYN	CBL	XCP/L	YCP/L	CPB
.013	-.010	-.01116	.09138	.00069	-.00121	-.00072	.00006	.60133	.00000	.00000
	GRADIENT	.00000	.00000	.00000	.00000	.00000	.00000	.00000	.00000	.00000

RUN NO. 532/ 0 GRADIENT INTERVAL = -5.00/ 5.00

ALPHA	BETA	CN	CA	CLM	CY	CYN	CBL	XCP/L	YCP/L	CPB
5.071	-.008	.05303	.08934	.02071	-.00207	-.00107	.00007	.28551	.00000	.00000
	GRADIENT	.00000	.00000	.00000	.00000	.00000	.00000	.00000	.00000	.00000

ORIGINAL PAGE IS OF POOR QUALITY

DATE 25 JUL 75 TABULATED SOURCE DATA - IA17A (ATR554) (22 JUL 75)

AEDC VA422(IA17) ISOLATED EXTERNAL TANK

PARAMETRIC DATA

MACH = 5.930 GRID = 15.000

REFERENCE DATA

SREF = 2690.0000 SQ.FT. XMRP = 1360.1000 IN. XT
LREF = 1290.3000 IN. YMRP = .0000 IN. YT
BREF = 1290.3000 IN. ZMRP = 416.4000 IN. ZT
SCALE = .0100

RUN NO. 588/ 0 GRADIENT INTERVAL = -5.00/ 5.00

ALPHA	BETA	CN	CA	CLM	CY	CYN	CBL	XCP/L	YCP/L	CPB
-24.984	.000	-.47397	.14429	-.03468	.00654	-.00003	.00046	.50722	.00000	.00000
	GRADIENT	.00000	.00000	.00000	.00000	.00000	.00000	.00000	.00000	.00000

RUN NO. 589/ 0 GRADIENT INTERVAL = -5.00/ 5.00

ALPHA	BETA	CN	CA	CLM	CY	CYN	CBL	XCP/L	YCP/L	CPB
-19.986	.000	-.34376	.12401	-.03844	.00573	.00024	.00031	.48022	.00000	.00000
	GRADIENT	.00000	.00000	.00000	.00000	.00000	.00000	.00000	.00000	.00000

RUN NO. 590/ 0 GRADIENT INTERVAL = -5.00/ 5.00

ALPHA	BETA	CN	CA	CLM	CY	CYN	CBL	XCP/L	YCP/L	CPB
-14.985	-.005	-.23163	.10937	-.03698	.00175	.00045	.00017	.44681	.00000	.00000
	GRADIENT	.00000	.00000	.00000	.00000	.00000	.00000	.00000	.00000	.00000

RUN NO. 591/ 0 GRADIENT INTERVAL = -5.00/ 5.00

ALPHA	BETA	CN	CA	CLM	CY	CYN	CBL	XCP/L	YCP/L	CPB
-9.986	-.001	-.14304	.09962	-.02946	.00108	.00012	.00005	.41448	.00000	.00000
	GRADIENT	.00000	.00000	.00000	.00000	.00000	.00000	.00000	.00000	.00000

RUN NO. 592/ 0 GRADIENT INTERVAL = -5.00/ 5.00

ALPHA	BETA	CN	CA	CLM	CY	CYN	CBL	XCP/L	YCP/L	CPB
-5.051	-.005	-.07446	.09278	-.01763	.00142	-.00009	.00005	.39296	.00000	.00000
	GRADIENT	.00000	.00000	.00000	.00000	.00000	.00000	.00000	.00000	.00000

RUN NO. 593/ 0 GRADIENT INTERVAL = -5.00/ 5.00

ALPHA	BETA	CN	CA	CLM	CY	CYN	CBL	XCP/L	YCP/L	CPB
.007	-.007	-.01094	.09199	.00069	-.00038	-.00065	.00006	.60249	.00000	.00000
	GRADIENT	.00000	.00000	.00000	.00000	.00000	.00000	.00000	.00000	.00000

RUN NO. 594/ 0 GRADIENT INTERVAL = -5.00/ 5.00

ALPHA	BETA	CN	CA	CLM	CY	CYN	CBL	XCP/L	YCP/L	CPB
5.077	-.004	.05381	.08918	.02067	-.00204	-.00101	.00006	.28999	.00000	.00000
	GRADIENT	.00000	.00000	.00000	.00000	.00000	.00000	.00000	.00000	.00000

DATE 25 JUL 75 TABULATED SOURCE DATA - 1A17A

AEDC VA422(1A17) ISOLATED EXTERNAL TANK (ATR555) (22 JUL 75)

REFERENCE DATA

SREF = 2890.0000 SQ.FT. XMRP = 1380.1000 IN. XT
LREF = 1290.3000 IN. YMRP = .0000 IN. YT
BREF = 1290.3000 IN. ZMRP = 416.4000 IN. ZT
SCALE = .0100

PARAMETRIC DATA

MACH = 5.930 GRID = 15.000

RUN NO. 703/ 0 GRADIENT INTERVAL = -5.00/ 5.00

ALPHA	BETA	CN	CA	CLM	CY	CYN	CBL	XCP/L	YCP/L	CPB
-24.982	-.003	-.47266	.14621	-.03489	.00800	.00008	.00043	.50677	.55132	.00000
-24.987	3.023	-.47759	.14407	-.03407	-.05411	-.00539	.00041	.50850	.48869	.00000
-24.976	6.022	-.48814	.14701	-.02968	-.11280	-.01097	.00064	.51586	.49038	.00000
	GRADIENT	-.00163	-.00071	.00027	-.02053	-.00181	-.00001	.00057	-.02070	.00000

RUN NO. 704/ 0 GRADIENT INTERVAL = -5.00/ 5.00

ALPHA	BETA	CN	CA	CLM	CY	CYN	CBL	XCP/L	YCP/L	CPB
-19.987	-.005	-.34363	.12515	-.03837	.00535	.00015	.00029	.48034	.00000	.00000
-19.986	3.024	-.34803	.12517	-.03692	-.04786	-.00676	.00027	.48423	.45959	.00000
-19.983	6.027	-.35493	.12902	-.03358	-.09822	-.01478	.00067	.49224	.45323	.00000
	GRADIENT	-.00145	.00001	.00048	-.01756	-.00228	-.00001	.00128	.15172	.00000

RUN NO. 705/ 0 GRADIENT INTERVAL = -5.00/ 5.00

ALPHA	BETA	CN	CA	CLM	CY	CYN	CBL	XCP/L	YCP/L	CPB
-14.983	-.004	-.23275	.11002	-.03709	.00399	.00072	.00014	.44700	.00000	.00000
-14.988	3.030	-.23828	.11200	-.03538	-.04309	-.00857	.00030	.45462	.41940	.00000
-14.981	6.031	-.24205	.11371	-.03378	-.08806	-.01762	.00064	.46084	.41857	.00000
	GRADIENT	-.00182	.00065	.00057	-.01552	-.00306	.00005	.00251	.13825	.00000

RUN NO. 706/ 0 GRADIENT INTERVAL = -5.00/ 5.00

ALPHA	BETA	CN	CA	CLM	CY	CYN	CBL	XCP/L	YCP/L	CPB
-9.982	-.004	-.14302	.10068	-.02955	.00170	.00033	.00001	.41400	.00000	.00000
-9.986	3.030	-.14542	.10142	-.02837	-.03787	-.01004	.00027	.42206	.37303	.00000
-9.990	6.026	-.14798	.10271	-.02779	-.07989	-.01993	.00052	.42713	.38404	.00000
	GRADIENT	-.00079	.00024	.00039	-.01304	-.00342	.00009	.00266	.12293	.00000

RUN NO. 707/ 0 GRADIENT INTERVAL = -5.00/ 5.00

ALPHA	BETA	CN	CA	CLM	CY	CYN	CBL	XCP/L	YCP/L	CPB
-5.045	-.012	-.07331	.09414	-.01771	.00143	.00022	.00002	.38955	.00000	.00000
-4.990	3.032	-.07373	.09758	-.01574	-.03502	-.01154	.00029	.40923	.32822	.00000
-4.989	6.028	-.07519	.09733	-.01550	-.07326	-.02163	.00056	.41430	.35211	.00000
	GRADIENT	-.00014	.00113	.00065	-.01197	-.00386	.00009	.00647	.10783	.00000

AEDC VA422(IA17) ISOLATED EXTERNAL TANK (ATR555) (22 JUL 75)

PARAMETRIC DATA

MACH = 5.930 GRID = 15.000

REFERENCE DATA

SREF = 2690.0000 SQ.FT. XMRP = 1360.1000 IN. XT
LREF = 1290.3000 IN. YMRP = .0000 IN. YT
BREF = 1290.3000 IN. ZMRP = 416.4000 IN. ZT
SCALE = .0100

RUN NO. 708/ 0 GRADIENT INTERVAL = -5.00/ 5.00

ALPHA	BETA	CN	CA	CLM	CY	CYN	CBL	XCP/L	YCP/L	CPB
.014	-.009	-.01120	.09206	.00068	.00201	-.00004	.00001	.60082	.00000	.00000
.005	3.040	-.01088	.09314	.00116	-.03664	-.01276	.00029	.63285	.31505	.00000
.011	6.017	-.01083	.09371	.00077	-.07208	-.02212	.00053	.60805	.34397	.00000
	GRADIENT	.00010	.00035	.00016	-.01267	-.00417	.00009	.01050	.10332	.00000

RUN NO. 709/ 0 GRADIENT INTERVAL = -5.00/ 5.00

ALPHA	BETA	CN	CA	CLM	CY	CYN	CBL	XCP/L	YCP/L	CPB
5.075	-.011	.05402	.08918	.02081	.00069	-.00048	.00002	.28927	.00000	.00000
5.007	3.032	.05162	.09179	.02009	-.03744	-.01181	.00032	.28640	.33800	.00000
5.009	6.023	.05263	.09339	.01975	-.07696	-.02226	.00063	.29614	.35626	.00000
	GRADIENT	-.00079	.00096	-.00023	-.01253	-.00372	.00010	-.00094	.11107	.00000

AEDC VA422(IA17) ISOLATED EXTERNAL TANK (ATR556) (22 JUL 75)

PARAMETRIC DATA

MACH = 7.980 GRID = 30.000

REFERENCE DATA

SREF = 2690.0000 SQ.FT. XMRP = 1360.1000 IN. XT
LREF = 1290.3000 IN. YMRP = .0000 IN. YT
BREF = 1290.3000 IN. ZMRP = 416.4000 IN. ZT
SCALE = .0100

RUN NO. 710/ 0 GRADIENT INTERVAL = -5.00/ 5.00

ALPHA	BETA	CN	CA	CLM	CY	CYN	CBL	XCP/L	YCP/L	CPB
-24.989	-.006	-.45959	.14722	-.02816	.01213	-.00052	.00054	.51554	.58813	.00000
	GRADIENT	.00000	.00000	.00000	.00000	.00000	.00000	.00000	.00000	.00000

RUN NO. 711/ 0 GRADIENT INTERVAL = -5.00/ 5.00

ALPHA	BETA	CN	CA	CLM	CY	CYN	CBL	XCP/L	YCP/L	CPB
-19.988	-.013	-.32492	.12081	-.03480	.00760	.00023	.00035	.48352	.53705	.00000
	GRADIENT	.00000	.00000	.00000	.00000	.00000	.00000	.00000	.00000	.00000

RUN NO. 712/ 0 GRADIENT INTERVAL = -5.00/ 5.00

ALPHA	BETA	CN	CA	CLM	CY	CYN	CBL	XCP/L	YCP/L	CPB
-14.988	-.013	-.21195	.10216	-.03892	.00449	.00084	.00016	.43365	.00000	.00000
	GRADIENT	.00000	.00000	.00000	.00000	.00000	.00000	.00000	.00000	.00000

AEDC VA422(IA17) ISOLATED EXTERNAL TANK (ATR556) (22 JUL 75)

REFERENCE DATA

SREF = 2690.0000 SQ.FT. XMRP = 1380.1000 IN. XT
LREF = 1290.3000 IN. YMRP = .0000 IN. YT
BREF = 1290.3000 IN. ZMRP = 416.4000 IN. ZT
SCALE = .0100

PARAMETRIC DATA

MACH = 7.980 GRID = 30.000

RUN NO. 713/ 0 GRADIENT INTERVAL = -5.00/ 5.00

ALPHA	BETA	CN	CA	CLM	CY	CYN	CBL	XCP/L	YCP/L	CPB
-9.988	-.011	-.12450	.09005	-.02978	.00211	.00053	.00009	.39132	.00000	.00000
	GRADIENT	.00000	.00000	.00000	.00000	.00000	.00000	.00000	.00000	.00000

RUN NO. 714/ 0 GRADIENT INTERVAL = -5.00/ 5.00

ALPHA	BETA	CN	CA	CLM	CY	CYN	CBL	XCP/L	YCP/L	CPB
-5.060	-.011	-.08260	.08437	-.01707	.00194	.00039	.00004	.36788	.00000	.00000
	GRADIENT	.00000	.00000	.00000	.00000	.00000	.00000	.00000	.00000	.00000

RUN NO. 715/ 0 GRADIENT INTERVAL = -5.00/ 5.00

ALPHA	BETA	CN	CA	CLM	CY	CYN	CBL	XCP/L	YCP/L	CPB
.007	-.012	-.00478	.08171	.00063	.00101	.00001	.00009	.65119	.00000	.00000
	GRADIENT	.00000	.00000	.00000	.00000	.00000	.00000	.00000	.00000	.00000

RUN NO. 716/ 0 GRADIENT INTERVAL = -5.00/ 5.00

ALPHA	BETA	CN	CA	CLM	CY	CYN	CBL	XCP/L	YCP/L	CPB
5.074	-.010	.05193	.07939	.01916	-.00002	-.00036	.00008	.30055	.00000	.00000
	GRADIENT	.00000	.00000	.00000	.00000	.00000	.00000	.00000	.00000	.00000

AEDC VA422(IA17) ISOLATED EXTERNAL TANK (ATR557) (22 JUL 75)

REFERENCE DATA

SREF = 2690.0000 SQ.FT. XMRP = 1380.1000 IN. XT
LREF = 1290.3000 IN. YMRP = .0000 IN. YT
BREF = 1290.3000 IN. ZMRP = 416.4000 IN. ZT
SCALE = .0100

PARAMETRIC DATA

MACH = 7.980 GRID = 15.000

RUN NO. 880/ 0 GRADIENT INTERVAL = -5.00/ 5.00

ALPHA	BETA	CN	CA	CLM	CY	CYN	CBL	XCP/L	YCP/L	CPB
-24.988	-.010	-.48041	.14248	-.02877	.01111	-.00064	.00083	.51469	.59887	.00000
-24.988	3.021	-.48670	.14343	-.02885	-.05103	-.00601	.00040	.61814	.47800	.00000
-24.979	6.021	-.47801	.14670	-.02238	-.10999	-.01087	.00068	.52583	.48931	.00000
	GRADIENT	-.00208	.00032	.00063	-.02050	-.00177	-.00008	.00114	-.04054	.00000

AEDC VA422(IA17) ISOLATED EXTERNAL TANK (ATR557) (22 JUL 75)

REFERENCE DATA

SREF = 2890.0000 SQ.FT. XMRP = 1360.1000 IN. XT
LREF = 1290.3000 IN. YMRP = .0000 IN. YT
BREF = 1290.3000 IN. ZMRP = 416.4000 IN. ZT
SCALE = .0100

PARAMETRIC DATA

MACH = 7.980 GRID = 15.000

RUN NO. 881/ 0 GRADIENT INTERVAL = -5.00/ 5.00

ALPHA	BETA	CN	CA	CLM	CY	CYN	CBL	XCP/L	YCP/L	CPB
-19.983	-.009	-.32607	.11697	-.03526	.00538	-.00031	.00038	.48280	.00000	.00000
-19.988	3.024	-.33054	.11938	-.03359	-.04512	-.00764	.00040	.48734	.44001	.00000
-19.982	6.020	-.33974	.12304	-.02971	-.09656	-.01459	.00074	.49725	.45278	.00000
	GRADIENT	-.00147	.00079	.00055	-.01665	-.00242	.00001	.00150	.14509	.00000

RUN NO. 882/ 0 GRADIENT INTERVAL = -5.00/ 5.00

ALPHA	BETA	CN	CA	CLM	CY	CYN	CBL	XCP/L	YCP/L	CPB
-14.989	-.012	-.21230	.09819	-.03772	.00244	.00048	.00023	.43421	.00000	.00000
-14.984	3.025	-.21693	.10218	-.03567	-.04171	-.00922	.00041	.44347	.40392	.00000
-14.986	6.020	-.22276	.10350	-.03369	-.08475	-.01824	.00070	.45269	.40798	.00000
	GRADIENT	-.00152	.00131	.00068	-.01453	-.00319	.00006	.00305	.13297	.00000

RUN NO. 883/ 0 GRADIENT INTERVAL = -5.00/ 5.00

ALPHA	BETA	CN	CA	CLM	CY	CYN	CBL	XCP/L	YCP/L	CPB
-10.084	-.011	-.12860	.08747	-.03040	.00019	.00007	.00012	.39321	.00000	.00000
-9.980	3.028	-.12775	.09012	-.02863	-.03811	-.01088	.00033	.40178	.35696	.00000
-9.989	6.023	-.13079	.09051	-.02794	-.07575	-.02041	.00063	.40912	.37005	.00000
	GRADIENT	.00028	.00087	.00058	-.01261	-.00360	.00007	.00282	.11814	.00000

RUN NO. 884/ 0 GRADIENT INTERVAL = -5.00/ 5.00

ALPHA	BETA	CN	CA	CLM	CY	CYN	CBL	XCP/L	YCP/L	CPB
-5.036	-.011	-.06247	.08080	-.01693	.00115	-.00015	.00005	.36896	.00000	.00000
-4.989	3.028	-.06362	.08230	-.01635	-.03545	-.01187	.00035	.37880	.32434	.00000
-4.990	6.022	-.06335	.08435	-.01506	-.06976	-.02176	.00064	.39228	.34044	.00000
	GRADIENT	-.00038	.00049	.00019	-.01204	-.00386	.00010	.00324	.10672	.00000

RUN NO. 885/ 0 GRADIENT INTERVAL = -5.00/ 5.00

ALPHA	BETA	CN	CA	CLM	CY	CYN	CBL	XCP/L	YCP/L	CPB
.011	-.009	-.00543	.07925	.00023	-.00078	-.00043	.00009	.58794	.00000	.00000
.011	3.026	-.00602	.07881	.00081	-.03566	-.01260	.00037	.65261	.31146	.00000
.011	6.019	-.00665	.07970	.00085	-.07145	-.02344	.00068	.64814	.32919	.00000
	GRADIENT	-.00020	-.00014	.00019	-.01149	-.00401	.00009	.02131	.10261	.00000

AEDC VA422(IA17) ISOLATED EXTERNAL TANK (ATR557) (22 JUL 75)

REFERENCE DATA

SREF = 2690.0000 SQ.FT. XMRP = 1360.1000 IN. XT
LREF = 1290.3000 IN. YMRP = .0000 IN. YT
BREF = 1290.3000 IN. ZMRP = 416.4000 IN. ZT
SCALE = .0100

PARAMETRIC DATA

MACH = 7.980 GRID = 15.000

RUN NO. 886/ 0 GRADIENT INTERVAL = -5.00/ 5.00

ALPHA	BETA	CN	CA	CLM	CY	CYN	CBL	XCP/L	YCP/L	CPB
5.063	-.008	.05084	.07714	.01890	-.00320	-.00114	.00010	.29868	.00000	.00000
5.003	3.025	.04880	.07894	.01886	-.03924	-.01273	.00042	.28836	.33165	.00000
5.007	6.020	.04982	.07998	.01816	-.07430	-.02262	.00074	.30370	.34566	.00000
	GRADIENT	-.00067	.00059	-.00001	-.01188	-.00382	.00011	-.00340	.10934	.00000

AEDC VA422(IA17) ISOLATED EXTERNAL TANK (ATR558) (22 JUL 75)

REFERENCE DATA

SREF = 2690.0000 SQ.FT. XMRP = 1360.1000 IN. XT
LREF = 1290.3000 IN. YMRP = .0000 IN. YT
BREF = 1290.3000 IN. ZMRP = 416.4000 IN. ZT
SCALE = .0100

PARAMETRIC DATA

MACH = 7.980 GRID = 15.000

RUN NO. 907/ 0 GRADIENT INTERVAL = -5.00/ 5.00

ALPHA	BETA	CN	CA	CLM	CY	CYN	CBL	XCP/L	YCP/L	CPB
-24.986	-.005	-.46001	.14303	-.02900	.00837	-.00102	.00063	.51430	.64321	.00000
-24.983	3.020	-.46740	.14474	-.02690	-.05126	-.00614	.00040	.51813	.47463	.00000
-24.980	6.020	-.47777	.14744	-.02249	-.11007	-.01121	.00067	.52546	.48721	.00000
	GRADIENT	-.00244	.00057	.00069	-.01972	-.00169	-.00008	.00127	-.05573	.00000

RUN NO. 908/ 0 GRADIENT INTERVAL = -5.00/ 5.00

ALPHA	BETA	CN	CA	CLM	CY	CYN	CBL	XCP/L	YCP/L	CPB
-19.993	-.003	-.32556	.11866	-.03537	.00383	-.00059	.00039	.48244	.00000	.00000
-19.987	3.029	-.33053	.12025	-.03366	-.04614	-.00802	.00041	.48718	.43697	.00000
-19.980	6.022	-.33931	.12396	-.02977	-.09636	-.01478	.00076	.49704	.45119	.00000
	GRADIENT	-.00164	.00052	.00056	-.01648	-.00245	.00001	.00156	.14412	.00000

RUN NO. 909/ 0 GRADIENT INTERVAL = -5.00/ 5.00

ALPHA	BETA	CN	CA	CLM	CY	CYN	CBL	XCP/L	YCP/L	CPB
-14.991	-.004	-.21288	.09902	-.03767	.00009	-.00038	.00025	.43472	.00000	.00000
-14.984	3.021	-.21608	.10295	-.03563	-.04237	-.00946	.00041	.44313	.40235	.00000
-14.977	6.025	-.22255	.10429	-.03368	-.08510	-.01840	.00070	.45267	.40729	.00000
	GRADIENT	-.00106	.00130	.00067	-.01403	-.00300	.00005	.00278	.13299	.00000

ORIGINAL PAGE IS OF POOR QUALITY

DATE 25 JUL 75 TABULATED SOURCE DATA - IA17A

AEDC VA422(IA17) ISOLATED EXTERNAL TANK (ATR558) (22 JUL 75)

REFERENCE DATA

SREF = 2690.0000 SQ.FT. XMRP = 1380.1000 IN. XT
LREF = 1290.3000 IN. YMRP = .0000 IN. YT
BREF = 1290.3000 IN. ZMRP = 416.4000 IN. ZT
SCALE = .0100

PARAMETRIC DATA

MACH = 7.980 GRID = 15.000

RUN NO. 910/ 0 GRADIENT INTERVAL = -5.00/ 5.00

ALPHA	BETA	CN	CA	CLM	CY	CYN	CBL	XCP/L	YCP/L	CPB
-10.082	-.007	-.12858	.08827	-.03032	-.00027	-.00017	.00012	.39358	.00000	.00000
-9.984	3.026	-.12818	.09180	-.02857	-.03884	-.01125	.00033	.40261	.35599	.00000
-9.988	6.027	-.13106	.09107	-.02789	-.07595	-.02061	.00063	.41060	.36872	.00000
	GRADIENT	.00013	.00116	.00058	-.01271	-.00365	.00007	.00298	.11736	.00000

RUN NO. 911/ 0 GRADIENT INTERVAL = -5.00/ 5.00

ALPHA	BETA	CN	CA	CLM	CY	CYN	CBL	XCP/L	YCP/L	CPB
-5.037	-.009	-.06347	.08152	-.01689	-.00071	-.00044	.00008	.37244	.00000	.00000
-4.989	3.029	-.06378	.08268	-.01628	-.03639	-.01239	.00035	.37998	.32037	.00000
-4.986	6.021	-.06389	.08644	-.01504	-.07085	-.02204	.00066	.39391	.34100	.00000
	GRADIENT	-.00010	.00038	.00020	-.01174	-.00393	.00009	.00248	.10545	.00000

RUN NO. 912/ 0 GRADIENT INTERVAL = -5.00/ 5.00

ALPHA	BETA	CN	CA	CLM	CY	CYN	CBL	XCP/L	YCP/L	CPB
.012	-.007	-.00551	.07919	.00029	-.00314	-.00090	.00009	.59512	.00000	.00000
.009	3.027	-.00652	.07975	.00089	-.03677	-.01274	.00038	.65351	.31623	.00000
.009	6.027	-.00686	.08078	.00096	-.07297	-.02380	.00069	.65604	.33045	.00000
	GRADIENT	-.00033	.00018	.00020	-.01108	-.00390	.00010	.01925	.10423	.00000

RUN NO. 913/ 0 GRADIENT INTERVAL = -5.00/ 5.00

ALPHA	BETA	CN	CA	CLM	CY	CYN	CBL	XCP/L	YCP/L	CPB
5.073	-.008	.04992	.07756	.01899	-.00361	-.00121	.00010	.29255	.00000	.00000
5.011	3.016	.04841	.07868	.01895	-.03811	-.01269	.00042	.28489	.32575	.00000
5.008	6.023	.04968	.08095	.01820	-.07496	-.02293	.00074	.30240	.34467	.00000
	GRADIENT	-.00050	.00037	-.00001	-.01141	-.00380	.00011	-.00253	.10773	.00000

AEDC VA422(IA17) ISOLATED EXTERNAL TANK (ATR559) (22 JUL 75)

REFERENCE DATA

SREF = 2690.0000 SQ.FT. XMRP = 1360.1000 IN. XT
LREF = 1290.3000 IN. YMRP = .0000 IN. YT
BREF = 1290.3000 IN. ZMRP = 416.4000 IN. ZT
SCALE = .0100

PARAMETRIC DATA

MACH = 5.930 GRID = 15.000

RUN NO. 442/ 0 GRADIENT INTERVAL = -5.00/ 5.00

ALPHA	BETA	CN	CA	CLM	CY	CYN	CBL	XCP/L	YCP/L	CPB
-24.989	-.012	-.47143	.14713	-.03488	.00873	.00023	.00046	.50665	.53954	.00000
-24.985	3.023	-.47553	.14614	-.03410	-.05254	-.00521	.00042	.50825	.48909	.00000
-24.978	6.022	-.48609	.14886	-.02978	-.11234	-.01071	.00068	.51554	.49172	.00000
	GRADIENT	-.00135	-.00033	.00026	-.02019	-.00179	-.00001	.00053	-.01663	.00000

AEDC VA422(IA17) ORB AND ET SEPARATING(ET DATA) (ATR601) (24 JUL 75)

REFERENCE DATA

SREF = 2690.0000 SQ.FT. XMRP = 1360.1000 IN. XT
LREF = 1290.3000 IN. YMRP = .0000 IN. YT
BREF = 1290.3000 IN. ZMRP = 416.4000 IN. ZT
SCALE = .0100

PARAMETRIC DATA

DLT-Y = -60.000 ALPHA = .000
BETA = .000 DLTALF = .000
DLTBTA = -3.000 MACH = 5.930
AILRON = .000 ELEVON = .000
GRID = 1.000

RUN NO. 95/ 0 GRADIENT INTERVAL = -5.00/ 5.00

DLT-X	DLT-Z	CN	CA	CLM	CY	CYN	CBL	XCP/L	YCP/L	CPB
.543	19.025	-.04039	.08716	.00728	.04321	.00923	-.00002	.68433	.40902	-.02411
.526	99.541	-.03329	.08664	.00711	.04138	.00938	-.00014	.70755	.40004	-.02439
.639	200.490	-.02144	.08771	.00955	.03726	.01073	-.00013	.86972	.35713	-.02105
.612	302.130	-.00880	.08229	.00113	.03726	.01100	-.00031	.64782	.35219	-.02343
.648	400.990	-.00635	.08414	.00213	.03915	.01189	-.00032	.79274	.34620	-.02609
.525	500.080	-.00786	.08604	.00183	.03717	.01145	-.00030	.72052	.34316	-.02600
.535	600.110	-.00952	.08690	.00092	.03805	.01164	-.00031	.62565	.34471	-.02601
	GRADIENT	.00000	.00000	.00000	.00000	.00000	.00000	.00000	.00000	.00000

RUN NO. 98/ 0 GRADIENT INTERVAL = -5.00/ 5.00

DLT-X	DLT-Z	CN	CA	CLM	CY	CYN	CBL	XCP/L	YCP/L	CPB
200.470	23.202	-.05255	.08836	-.00073	.04944	.00931	.00010	.54857	.42679	-.02551
200.580	99.370	-.03706	.08780	.00770	.04250	.00918	-.00014	.70359	.40743	-.02498
200.530	198.510	-.02500	.08757	.01079	.03724	.01062	-.00025	.85970	.35904	-.02097
200.500	298.530	-.01007	.08266	.00324	.03744	.01126	-.00025	.78310	.34831	-.02263
200.460	398.090	-.00598	.08399	.00256	.03786	.01128	-.00032	.85750	.35019	-.02542
200.500	499.960	-.00779	.08594	.00209	.03856	.01182	-.00032	.74613	.34426	-.02597
200.570	600.150	-.00981	.08782	.00083	.03788	.01197	-.00031	.61772	.33758	-.02624
	GRADIENT	.00000	.00000	.00000	.00000	.00000	.00000	.00000	.00000	.00000

AEDC VA422(IA17) ORB AND ET SEPARATING(ET DATA) (ATR602) (24 JUL 75)

REFERENCE DATA

SREF = 2690.0000 SQ.FT. XMRP = 1360.1000 IN. XT
LREF = 1290.3000 IN. YMRP = .0000 IN. YT
BREF = 1290.3000 IN. ZMRP = 416.4000 IN. ZT
SCALE = .0100

PARAMETRIC DATA

DLT-Y = -60.000 ALPHA = .000
BETA = .000 DLTALF = -10.000
DLTBTA = -3.000 MACH = 5.930
AILRON = .000 ELEVON = .000
GRID = 1.000

RUN NO. 97/ 0 GRADIENT INTERVAL = -5.00/ 5.00

DLT-X	DLT-Z	CN	CA	CLM	CY	CYN	CBL	XCP/L	YCP/L	CPB
.488	403.690	-.18285	.10370	-.01278	.04534	.00957	.00003	.50362	.41085	-.02326
.555	501.800	-.14252	.09476	-.02579	.04343	.01165	-.00010	.43190	.37093	-.02451
.566	600.250	-.14256	.09809	-.02886	.04340	.01104	-.00013	.41690	.38067	-.02853
-.175	602.060	-.14355	.09576	-.03046	.04601	.01135	-.00013	.41009	.38598	-.02823
	GRADIENT	.00000	.00000	.00000	.00000	.00000	.00000	.00000	.00000	.00000

RUN NO. 98/ 0 GRADIENT INTERVAL = -5.00/ 5.00

DLT-X	DLT-Z	CN	CA	CLM	CY	CYN	CBL	XCP/L	YCP/L	CPB
200.440	398.540	-.18949	.10497	-.00933	.04713	.00890	-.00007	.51987	.42844	-.02227
200.480	497.290	-.14940	.09785	-.02029	.04488	.01084	.00002	.48348	.39192	-.02803
200.470	599.640	-.14155	.09690	-.02858	.04379	.01137	-.00013	.41738	.37696	-.02735
200.520	800.340	-.14559	.09899	-.03028	.04419	.01109	-.00013	.41303	.38307	-.02857
	GRADIENT	.00000	.00000	.00000	.00000	.00000	.00000	.00000	.00000	.00000

AEDC VA422(IA17) ORB AND ET SEPARATING(ET DATA) (ATR603) (24 JUL 75)

REFERENCE DATA

SREF = 2690.0000 SQ.FT. XMRP = 1360.1000 IN. XT
LREF = 1290.3000 IN. YMRP = .0000 IN. YT
BREF = 1290.3000 IN. ZMRP = 416.4000 IN. ZT
SCALE = .0100

PARAMETRIC DATA

DLT-Y = -60.000 ALPHA = .000
BETA = .000 DLTALF = -20.000
DLTBTA = -3.000 MACH = 5.930
AILRON = .000 ELEVON = .000
GRID = 1.000

RUN NO. 99/ 0 GRADIENT INTERVAL = -5.00/ 5.00

DLT-X	DLT-Z	CN	CA	CLM	CY	CYN	CBL	XCP/L	YCP/L	CPB
.802	802.140	-.34368	.12106	-.04139	.05909	.00877	.00019	.47421	.45465	-.02518
.553	1000.300	-.34601	.11951	-.03869	.05710	.00747	.00025	.48023	.46691	-.02688
	GRADIENT	.00000	.00000	.00000	.00000	.00000	.00000	.00000	.00000	.00000

RUN NO. 100/ 0 GRADIENT INTERVAL = -5.00/ 5.00

DLT-X	DLT-Z	CN	CA	CLM	CY	CYN	CBL	XCP/L	YCP/L	CPB
200.510	798.810	-.34902	.11948	-.03847	.05898	.00848	.00020	.48134	.45791	-.02475
200.370	1000.200	-.34513	.12016	-.03820	.05744	.00740	.00025	.48102	.46829	-.02711
	GRADIENT	.00000	.00000	.00000	.00000	.00000	.00000	.00000	.00000	.00000

AEDC VA422(IA17) ORB AND ET SEPARATING(ET DATA) (ATR701) (24 JUL 75)

REFERENCE DATA

SREF = 2690.0000 SQ.FT. XMRP = 1360.1000 IN. XT
LREF = 1290.3000 IN. YMRP = .0000 IN. YT
BREF = 1290.3000 IN. ZMRP = 416.4000 IN. ZT
SCALE = .0100

PARAMETRIC DATA

DLT-X = .000 ALPHA = .000
BETA = .000 DLTALF = .000
DLTBTA = 3.000 MACH = 5.930
AILRON = .000 ELEVON = .000
GRID = 2.000

RUN NO. 104/ 0 GRADIENT INTERVAL = -5.00/ 5.00

DLT-Z	DLT-Y	CN	CA	CLM	CY	CYN	CBL	XCP/L	YCB/L	CPB
20.015	-202.240	-.03917	.08458	.01471	-.01951	-.01339	.00030	.82063	.07901	-.01919
19.733	-150.180	-.04265	.08514	.01428	-.02341	-.01167	.00041	.79224	.21014	-.02039
19.668	-100.930	-.04368	.08491	.01328	-.02689	-.01065	.00051	.77081	.28182	-.02192
19.870	-50.802	-.04198	.08285	.01078	-.02831	-.01046	.00039	.73773	.30021	-.02252
20.284	-.882	-.03937	.08113	.00758	-.03108	-.01013	.00043	.69293	.33071	-.02417
20.318	49.031	-.03968	.08104	.00744	-.03361	-.00962	.00036	.68928	.35841	-.02462
20.387	99.687	-.04127	.08353	.00837	-.03781	-.00949	.00039	.69999	.38200	-.02471
20.461	149.940	-.04122	.08579	.00960	-.03913	-.01031	.00028	.72113	.37433	-.02391
20.683	199.290	-.04348	.08744	.01179	-.04234	-.01069	.00018	.74770	.38198	-.02378
	GRADIENT	.00000	.00000	.00000	.00000	.00000	.00000	.00000	.00000	.00000

RUN NO. 103/ 0 GRADIENT INTERVAL = -5.00/ 5.00

DLT-Z	DLT-Y	CN	CA	CLM	CY	CYN	CBL	XCP/L	YCB/L	CPB
199.650	-200.330	-.01006	.07982	.00331	-.03117	-.01189	.00020	.78796	.29187	-.02196
199.790	-150.980	-.01319	.08113	.00474	-.03004	-.01222	.00014	.80957	.27424	-.02119
199.790	-101.860	-.01572	.08249	.00659	-.02897	-.01222	.00007	.85136	.26358	-.02084
199.990	-51.209	-.01924	.08255	.00874	-.03050	-.01251	.00001	.87549	.27182	-.02051
199.990	-2.354	-.02178	.08381	.01018	-.03031	-.01243	.00002	.88500	.27180	-.02010
200.070	48.541	-.02328	.08393	.01083	-.03206	-.01222	.00011	.88374	.29194	-.02065
200.280	98.263	-.02224	.08238	.01027	-.03262	-.01183	.00017	.88086	.30511	-.02100
200.190	148.870	-.01892	.08230	.00876	-.03290	-.01165	.00020	.88180	.31094	-.02095
202.330	199.060	-.01669	.08160	.00715	-.03232	-.01113	.00028	.85748	.31776	-.02154
	GRADIENT	.00000	.00000	.00000	.00000	.00000	.00000	.00000	.00000	.00000

RUN NO. 102/ 0 GRADIENT INTERVAL = -5.00/ 5.00

DLT-Z	DLT-Y	CN	CA	CLM	CY	CYN	CBL	XCP/L	YCB/L	CPB
397.750	-198.860	-.00761	.07421	.00217	-.03183	-.01164	.00025	.75788	.30292	-.02641
400.070	-151.080	-.00709	.07393	.00226	-.03060	-.01103	.00024	.78107	.30647	-.02638
400.130	-101.310	-.00685	.07401	.00261	-.03049	-.01062	.00024	.82486	.31489	-.02649
400.120	-50.886	-.00658	.07416	.00293	-.03107	-.01086	.00025	.86903	.31423	-.02637
400.090	-1.185	-.00652	.07422	.00307	-.03190	-.01102	.00026	.88739	.31689	-.02643
400.040	49.105	-.00585	.07421	.00309	-.03234	-.01160	.00027	.92664	.30776	-.02640
400.050	99.075	-.00622	.07417	.00293	-.03370	-.01184	.00026	.88705	.31291	-.02628
400.060	149.200	-.00694	.07414	.00261	-.03321	-.01179	.00028	.82075	.31020	-.02643
400.080	199.270	-.00820	.07420	.00223	-.03361	-.01202	.00027	.74802	.30838	-.02659
	GRADIENT	.00000	.00000	.00000	.00000	.00000	.00000	.00000	.00000	.00000

ORIGINAL PAGE IS OF POOR QUALITY

AEDC VA422(IA17) ORB AND ET SEPARATING(ET DATA) (ATR702) (24 JUL 75)

REFERENCE DATA

SREF = 2690.0000 SQ.FT. XMRP = 1360.1000 IN. XT
LREF = 1290.3000 IN. YMRP = .0000 IN. YT
BREF = 1290.3000 IN. ZMRP = 416.4000 IN. ZT
SCALE = .0100

PARAMETRIC DATA

DLT-X = .000 ALPHA = .000
BETA = .000 DLTALF = .000
DLTBTA = .000 MACH = 5.930
AILRON = .000 ELEVON = .000
GRID = 2.000

RUN NO. 105/ 0 GRADIENT INTERVAL = -5.00/ 5.00

DLT-Z	DLT-Y	CN	CA	CLM	CY	CYN	CBL	XCP/L	YCB/L	CPB
20.571	-201.360	-.04731	.08642	.01546	.01427	-.00176	.00038	.78663	.64428	-.02223
20.620	-151.250	-.04522	.08624	.01320	.01333	-.00100	.00029	.75229	.61054	-.02318
20.176	-101.030	-.04066	.08425	.00927	.01031	-.00043	.00021	.71756	.58727	-.02360
20.021	-50.783	-.03858	.08230	.00719	.00825	.00033	.00019	.68848	.53072	-.02450
20.164	-1.203	-.03853	.08088	.00630	.00481	.00047	.00018	.67248	.49000	-.02507
20.135	47.677	-.03904	.08239	.00737	.00355	.00050	.00009	.69016	.00000	-.02473
19.602	98.928	-.03753	.08444	.00837	-.00048	-.00053	-.00001	.71422	.00000	-.02449
19.496	148.240	-.04033	.08630	.01096	-.00132	.00017	-.00017	.74814	.00000	-.02357
19.752	197.210	-.04286	.08690	.01410	-.00369	.00018	-.00023	.78813	.00000	-.02225
	GRADIENT	.00000	.00000	.00000	.00000	.00000	.00000	.00000	.00000	.00000

RUN NO. 106/ 0 GRADIENT INTERVAL = -5.00/ 5.00

DLT-Z	DLT-Y	CN	CA	CLM	CY	CYN	CBL	XCP/L	YCB/L	CPB
200.150	-200.630	-.01402	.08098	.00530	.00461	-.00065	-.00010	.82236	.68776	-.02071
200.380	-150.990	-.01636	.08204	.00710	.00610	-.00037	-.00014	.86141	.60019	-.02069
200.270	-101.450	-.02043	.08253	.00904	.00604	-.00063	-.00009	.86754	.63108	-.02119
200.150	-50.783	-.02212	.08334	.01030	.00585	-.00029	-.00002	.88363	.59264	-.02116
199.980	-1.154	-.02285	.08416	.01091	.00545	.00026	.00004	.89185	.52471	-.02100
200.120	49.163	-.02227	.08320	.01045	.00382	.00051	.00009	.88625	.00000	-.02119
199.910	98.546	-.02003	.08244	.00889	.00345	.00056	.00011	.86843	.00000	-.02106
199.830	149.750	-.01676	.08227	.00686	.00314	.00099	.00012	.84418	.00000	-.02081
199.790	199.210	-.01322	.08080	.00486	.00268	.00090	.00010	.81543	.00000	-.02104
	GRADIENT	.00000	.00000	.00000	.00000	.00000	.00000	.00000	.00000	.00000

RUN NO. 107/ 0 GRADIENT INTERVAL = -5.00/ 5.00

DLT-Z	DLT-Y	CN	CA	CLM	CY	CYN	CBL	XCP/L	YCB/L	CPB
400.040	-201.490	-.00788	.07428	.00179	.00415	.00033	-.00000	.72147	.50315	-.02658
400.050	-150.870	-.00659	.07419	.00209	.00597	.00087	-.00002	.78003	.45703	-.02675
400.000	-100.850	-.00643	.07443	.00245	.00554	.00103	-.00002	.82487	.42828	-.02671
400.170	-51.225	-.00654	.07446	.00272	.00525	.00079	-.00001	.84885	.45372	-.02686
400.040	-1.298	-.00557	.07449	.00286	.00383	.00027	.00001	.91652	.00000	-.02672
400.040	49.017	-.00617	.07446	.00281	.00288	-.00053	.00002	.87576	.00000	-.02673
400.040	99.468	-.00637	.07448	.00251	.00286	-.00031	.00002	.83370	.00000	-.02655
400.140	149.580	-.00757	.07441	.00218	.00259	-.00024	.00001	.75988	.00000	-.02655
398.100	198.850	-.00778	.07453	.00185	.00229	-.00024	.00003	.72439	.00000	-.02637
	GRADIENT	.00000	.00000	.00000	.00000	.00000	.00000	.00000	.00000	.00000

AEDC VA422(IA17) ORB AND ET SEPARATING(ET DATA) (ATR703) (24 JUL 75)

REFERENCE DATA

SREF = 2690.0000 SQ.FT. XMRP = 1380.1000 IN. XT
LREF = 1290.3000 IN. YMRP = .0000 IN. YT
BREF = 1290.3000 IN. ZMRP = 416.4000 IN. ZT
SCALE = .0100

PARAMETRIC DATA

DLT-X = .000 ALPHA = .000
BETA = .000 DLTALF = .000
DLTBTA = -3.000 MACH = 5.930
AILRON = .000 ELEVON = .000
GRID = 2.000

RUN NO. 110/ 0 GRADIENT INTERVAL = -5.00/ 5.00

DLT-Z	DLT-Y	CN	CA	CLM	CY	CYN	CBL	XCP/L	YCB/L	CPB
20.091	-202.120	-.04990	.08697	.01378	.05299	.00944	.00011	.75103	.43386	-.02373
19.195	-150.920	-.04551	.08537	.01035	.05029	.00926	-.00002	.71727	.42974	-.02383
19.775	-100.940	-.04299	.08315	.00850	.04941	.01010	-.00001	.69772	.41558	-.02477
19.754	-51.206	-.04042	.08026	.00656	.04651	.01050	-.00007	.67181	.40061	-.02540
19.774	-1.225	-.03840	.08019	.00679	.04488	.01076	-.00011	.68188	.39084	-.02464
19.860	48.689	-.03964	.08285	.00958	.04028	.01027	-.00023	.72718	.38015	-.02331
20.211	99.135	-.04024	.08477	.01176	.03720	.01000	-.00040	.76253	.37060	-.02282
20.620	149.430	-.04182	.08586	.01391	.03408	.01102	-.00043	.79065	.33236	-.02243
20.375	199.320	-.03771	.08530	.01271	.02918	.01225	-.00040	.79379	.26492	-.02051
	GRADIENT	.00000	.00000	.00000	.00000	.00000	.00000	.00000	.00000	.00000

RUN NO. 109/ 0 GRADIENT INTERVAL = -5.00/ 5.00

DLT-Z	DLT-Y	CN	CA	CLM	CY	CYN	CBL	XCP/L	YCB/L	CPB
199.880	-201.420	-.01695	.08129	.00673	.04183	.01112	-.00035	.83650	.37272	-.02208
199.950	-151.320	-.02075	.08226	.00857	.04150	.01083	-.00026	.84677	.37599	-.02190
200.130	-101.150	-.02267	.08259	.00975	.04024	.01114	-.00020	.85871	.36488	-.02194
200.140	-50.490	-.02220	.08413	.00985	.03889	.01155	-.00016	.86844	.35081	-.02217
200.090	-1.587	-.02025	.08417	.00859	.03829	.01202	-.00014	.85459	.33909	-.02215
200.250	49.055	-.01839	.08292	.00684	.03740	.01251	-.00013	.81822	.32470	-.02198
200.270	98.376	-.01449	.08281	.00477	.03702	.01219	-.00016	.78856	.32839	-.02215
200.430	148.780	-.01253	.08158	.00321	.03768	.01240	-.00024	.73737	.32854	-.02265
201.670	199.390	-.01066	.08076	.00212	.03717	.01178	-.00028	.69731	.33695	-.02347
	GRADIENT	.00000	.00000	.00000	.00000	.00000	.00000	.00000	.00000	.00000

RUN NO. 108/ 0 GRADIENT INTERVAL = -5.00/ 5.00

DLT-Z	DLT-Y	CN	CA	CLM	CY	CYN	CBL	XCP/L	YCB/L	CPB
400.200	-202.840	-.00848	.07426	.00134	.04277	.01249	-.00035	.66858	.35433	-.02710
400.050	-150.830	-.00815	.07445	.00173	.04277	.01277	-.00035	.70630	.34969	-.02702
400.010	-101.440	-.00726	.07453	.00198	.04231	.01288	-.00035	.74923	.34557	-.02709
400.100	-51.477	-.00614	.07456	.00221	.04082	.01235	-.00034	.81019	.34700	-.02710
400.120	-1.440	-.00645	.07452	.00227	.04037	.01212	-.00034	.80418	.34869	-.02712
400.050	49.024	-.00762	.07452	.00215	.03928	.01149	-.00031	.75525	.35393	-.02718
400.010	98.825	-.00719	.07450	.00182	.03934	.01156	-.00032	.73558	.35300	-.02717
400.050	148.600	-.00835	.07459	.00145	.03914	.01146	-.00033	.67944	.35378	-.02706
400.070	198.930	-.00914	.07488	.00107	.03801	.01150	-.00031	.64047	.34695	-.02710
	GRADIENT	.00000	.00000	.00000	.00000	.00000	.00000	.00000	.00000	.00000

ORIGINAL PAGE IS OF POOR QUALITY