General Disclaimer

One or more of the Following Statements may affect this Document

- This document has been reproduced from the best copy furnished by the organizational source. It is being released in the interest of making available as much information as possible.

- This document may contain data, which exceeds the sheet parameters. It was furnished in this condition by the organizational source and is the best copy available.

- This document may contain tone-on-tone or color graphs, charts and/or pictures, which have been reproduced in black and white.

- This document is paginated as submitted by the original source.

- Portions of this document are not fully legible due to the historical nature of some of the material. However, it is the best reproduction available from the original submission.

Produced by the NASA Center for Aerospace Information (CASI)

MSC 14836

NASA CR-144430

TECHNOLOGY INCORPORATED
LIFE SCIENCES DIVISION

SPECIAL REPORT

Occlusive Cuff Controller

(NASA-CR-144430) SPECIAL REPORT: OCCLUSIVE CUFF CONTROLLER (Technology, Inc., Houston, Tex.) 36 p HC $3.75 CSCL 06B

N75-31744

Unclas

G3/54 35286

OCT 1975

March 10, 1975

CONTRACT NAS 9-13291

National Aeronautics and Space Administration
Lyndon B. Johnson Space Center
Houston, Texas, 77058

17311 EL CAMINO REAL • HOUSTON, TEXAS 77058

PROJECT PERSONNEL

Engineer - William Hursta

Electronics and Construction Technician - John Donaldson

Manuscript Preparation - Mary Taylor

Graphics - Elizabeth West

TABLE OF CONTENTS

INTRODUCTION	
SECTION I	Device Operational Specifications
SECTION II	Pneumatics
SECTION III	Control Electronics
SECTION IV	ECG Trigger
SECTION V	Solenoid Drivers
SECTION VI	Power Supplies
APPENDIX A	Component List
APPENDIX B	Operational Instruction
BIBLIOGRAPHY	

INTRODUCTION

An experiment was added to the Skylab 3 and 4 missions in an attempt to document changes in lower limb blood flow (1). This experiment consisted of occluding venous return from a leg with a sphygmomanometer inflated by means of a hand bulb. Arterial inflow to the leg was estimated by the use of a capacitance plethysmograph (2) which measured changes in the circumference of a calf segment. The volume of blood in the calf segment was calculated from the changes in the calf circumference. This experiment was conducted pre- and postflight by members of the Johnson Space Center Cardiovascular Laboratory and inflight by the Skylab crewmembers themselves.

Despite extreme care in cuff placement and plethysmographic measurement technique there was considerable variance in the results within each individual. A close scrutiny of technique and equipment revealed the most probable source of experimental error was the manual inflation technique of the occlusive cuff. An extreme variability existed in the time it took to reach the proper cuff pressure to produce the desired amount of venous occlusion. After a number of trials it was decided that an accurate and reproducible inflation technique could not be achieved by hand and that a mechanical device should be constructed to control the inflation and timing of the occluding pressure cuff.

A literature search revealed numerous types of cuff pressurization devices (3) intended for both specific and general types of experimentation. However, no

device met the particular requirements needed by the laboratory. Since a blood flow experiment is being proposed as a possible Space Shuttle experiment, the device must meet specialized requirements peculiar to space operations and experimentation. The cuff controller must be light weight, compact, easily used and readily adjustable to each individual, reliable and usable in a space type environment. Additionally, it must deliver an exact cuff pressurization within a specified time and maintain that pressure for a preselected time.

Development of the Occlusive Cuff Controller evolved through a number of prototypes and extensive testing on human subjects. With minor changes, mainly in the electrical power supply, this device could, in its present form, be flown in a Space Shuttle type configuration for similar blood flow experiments.

General Description of Laboratory Occlusive Cuff Controller

The controller is assembled on a standard 19" rack mountable panel (Figure 1). The device requires 115 volt AC electrical power input and a pressurized gas (nitrogen, compressed air, carbon dioxide, etc) source from 75 to 100 psi (300 psi, maximum over pressure). Two occluding cuff pressures (30 and 50 mmHg) are selectable by a switch on the front panel. A front panel screw driver adjustment allows accurate cuff pressurization levels to be obtained for under or oversized limbs. Two pressurization cycles (20 second and 2 minutes) can be selected by a front panel switch. Adjustment of the timing cycles is also available through the front panel. Either cuff pressure may be used with either timing cycle. Figure 2

Front Panel Controls

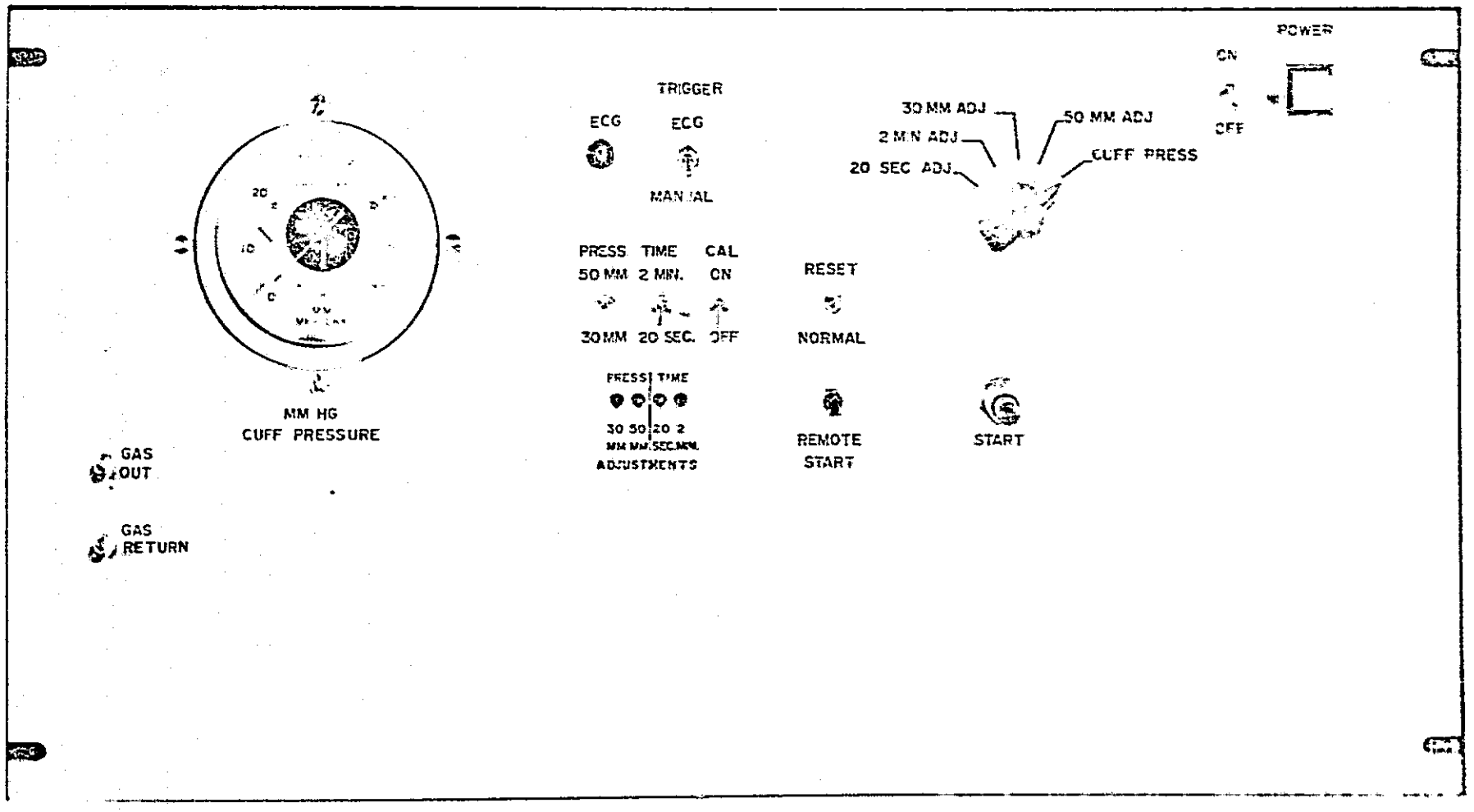

FIGURE 1

Parameter Describing Pressure Output of Limb
Blood Flow Cuff

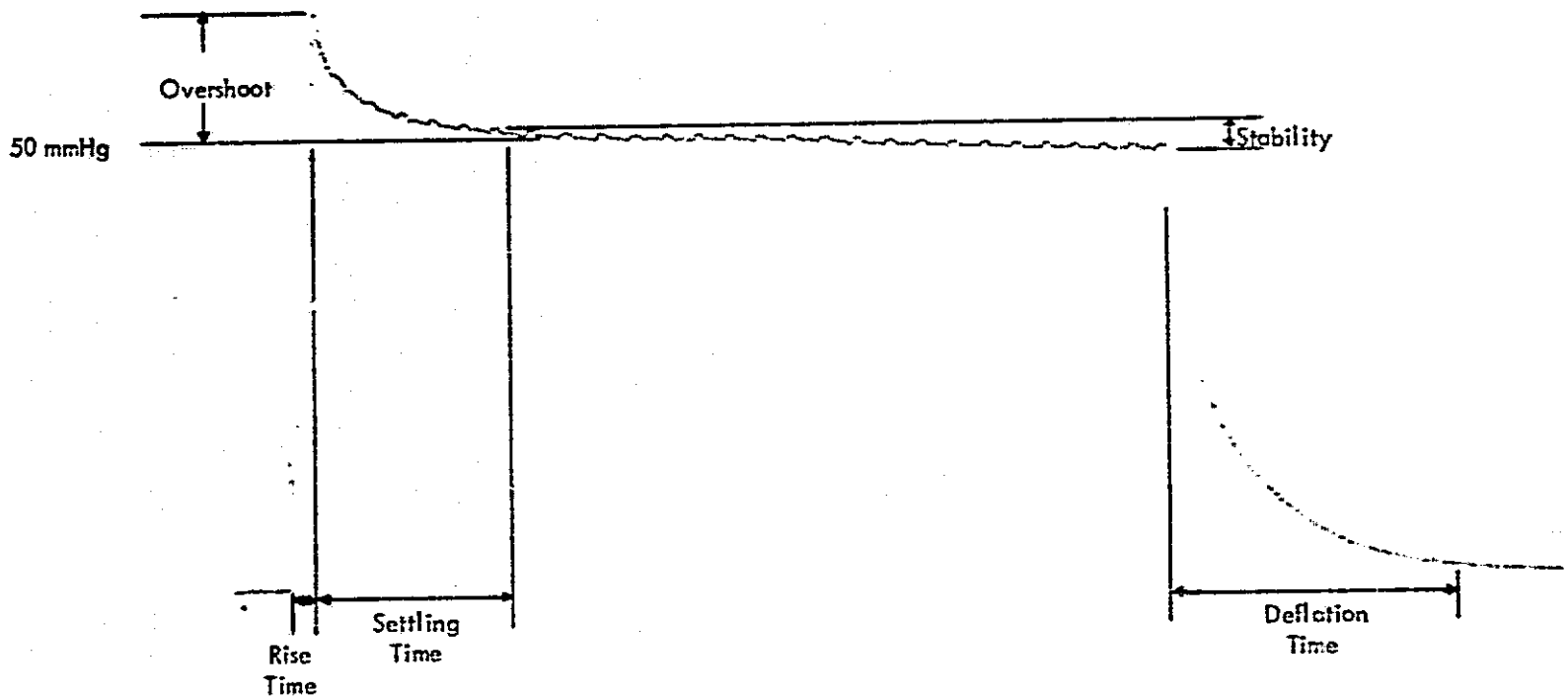

Parameters Describing Pressure Output of Limb Blood Flow Occlusion Cuff.

FIGURE 2

illustrates the cuff pressure ramp for the 50 mmHg setting during a 20 second timing period. A pushbutton hand switch allows remote start of the cuff inflation cycle. A stop/reset switch is provided which permits early termination of a pressurization cycle and disabling of the controller to prevent inadvertent activation of a pressure cycle. Pressure in the occluding cuff is monitored by a differential aneroid barometer mounted in the panel for easy observation by the operator.

An additional feature is an Electrocardiogram Trigger Circuit. This circuit allows the initiation of the selected pressurization cycle to be controlled by an externally supplied and conditioned ECG cycle. This feature provides consistent point of triggering during the heart's pumping cycle given a reasonably constant heart rate. The trigger circuit may be used or disabled at the operator's discretion.

Figure 3 shows the Occlusive Cuff Controller in use with a live subject. The final laboratory model of the unit has been through several thousand duty cycles during blood flow experiments in the laboratory without a failure. The unit has proved itself to be easy to use and reliable in daily operation. It has given the high degree of reproducability originally sought and at a reasonable cost.

S 75- 21565

FIGURE 3

ORIGINAL PAGE IS
OF POOR QUALITY

SECTION I

Device Operational Specifications

A number of parameters are defined as follows to describe the operation of the device. Figure 2 illustrates these parameters.

Rise Time =	Time to selected pressure
Overshoot =	Amount of pressure rise above selected pressure
Settling Time =	Time interval from when pressure first exceeds selected pressure until it decreased to within 1 mmHg of selected pressure
Stability =	Amount of pressure decreased from 1 mmHg above selected pressure to end of timing period
Deflation Time =	Time for pressure to fall to less than 2 mmHg after end of timing period

It is important to note that the specifications are for a 14 centimeter wide pressure cuff which has been snugly wrapped around the leg just above the knee of a live subject.

Timing =	Periods available - 20 seconds and 2 minutes Accuracy - within one-half second (either period) Reproducability - within ± 10 milliseconds (either period)

The pressure specifications are worst case values obtained from two subjects with lower thigh circumferences ranging from 14 inches to 18 inches.

Pressure =	Settings available - 30 and 50 mmHg Rise Time - .6 seconds or less (30 mmHg) .9 seconds or less (50 mmHg)

Overshoot - 10 mmHg or less (30 mmHg)
13 mmHg or less (50 mmHg)

Settling Time - 2 to 3 seconds (30 mmHg)
4 to 7 seconds (50 mmHg)

Stability - 3 mmHg or less (30 mmHg, 20 seconds)
4 mmHg or less (50 mmHg, 20 seconds)
5 mmHg or less (30 mmHg, 2 minutes)
6 mmHg or less (50 mmHg, 2 minutes)

Deflation Time - 3 seconds or less (30 mmHg)
3 seconds or less (50 mmHg)

Reproducability - Within 1 mmHg after second inflation at any one pressure setting

SECTION II

Pneumatics

Figure 4 is a schematic representation of the pneumatic system. The following is a brief description of its operation. A complete listing of its component parts may be found in Appendix A.

Pressurized gas (max 300 psi) is brought to a flow control/regulator and regulated to 100 psi at a nominal flow value of 5 cubic feet per minute. The Fill/Hold and Dump Solenoid valves are normally closed. Prior to an inflation cycle the Fill/Hold valve is de-energized (closed) and the Dump valve energized (open) to assure zero pressure in the cuff. Initiation of an inflation cycle opens the Fill/Hold valve and closes the Dump valve. When the desired pressurization of the cuff has been achieved, the Fill/Hold valve closes. At the end of the timing cycle, the Dump valve opens and the cuff deflates.

Figure 4 diagrammatically illustrates the pneumatic system. Figure 5 is a view of the back plane of the device with the pneumatic parts as well as the major electrical components labeled according to the following table.

1. Aneroid Gauge
2. Pressure Transducer
3. Dump Solenoid and Valve
4. Fill/Hold Solenoid and Valve
5. Flow Control/Regulator
6. + 28 VDC Power Supply
7. ± 12 VDC Power Supply
8. + 5 VDC Power Regulator
9. Control Section
10. Front Panel Selector Switchs
11. Parameter Monitor Switch

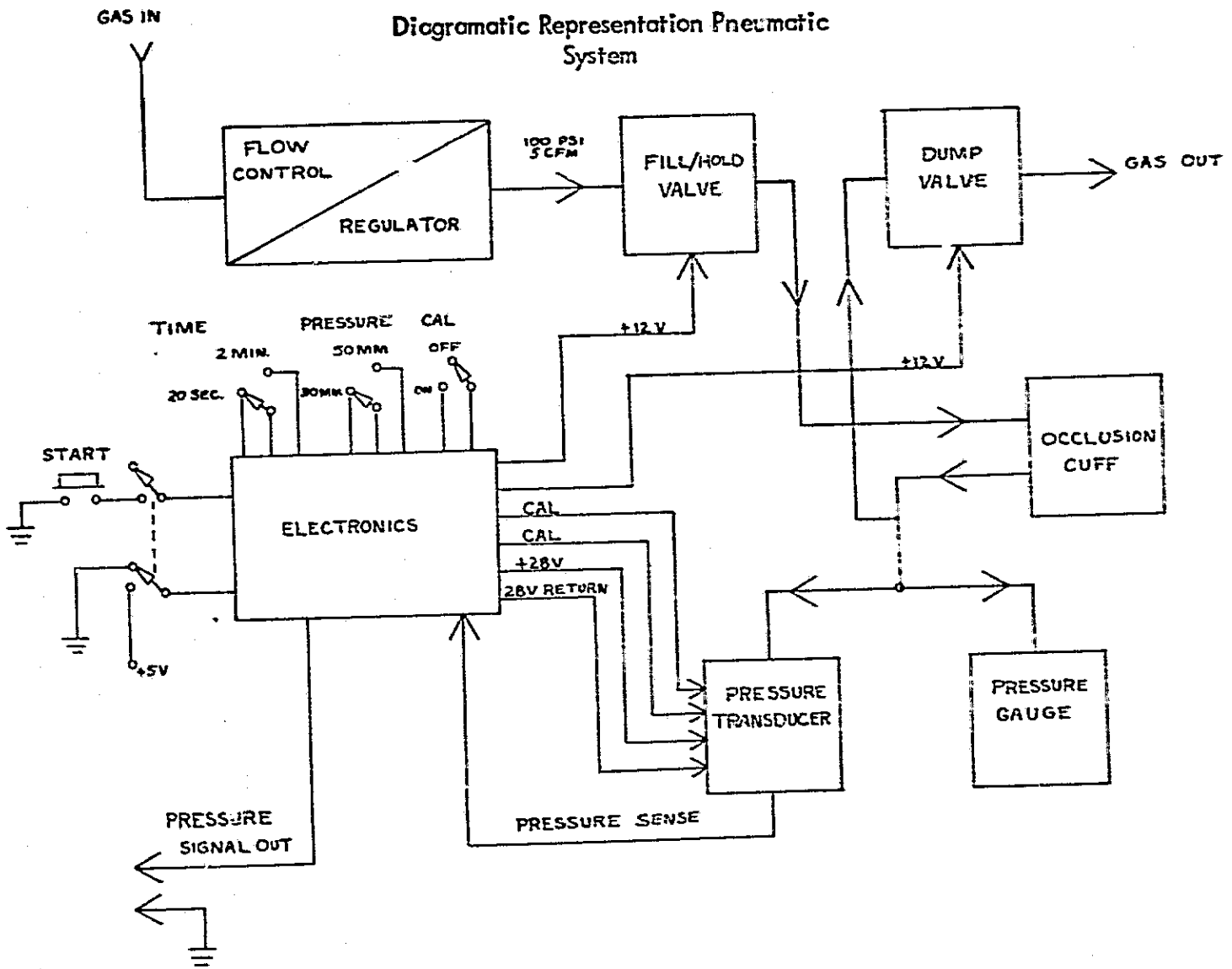
Diagramatic Representation Pneumatic System
GAS IN
FLOW CONTROL
REGULATOR
100 PSI 5 CFM
FILL/HOLD VALVE
DUMP VALVE
GAS OUT
TIME
2 MIN.
20 SEC.
PRESSURE
50MM
30MM
CAL
OFF
ON
+12 V
+12 V
START
ELECTRONICS
CAL
CAL
+28V
28V RETURN
+5V
OCCLUSION CUFF
PRESSURE TRANSDUCER
PRESSURE GAUGE
PRESSURE SENSE
PRESSURE SIGNAL OUT

FIGURE 4

FIGURE 5

Back Plane of Occlusive Cuff Controller

ORIGINAL PAGE IS
OF POOR QUALITY

SECTION III

Control Electronics

The control electronics are the heart of the Occlusive Cuff Controller and are presented in Figure 6. This logic controls all functions vital to operation of the Controller. Some of the main functions are:

1. Pressurization of the cuff (30 and 50 mmHg - switch selectable)
2. Timing cycle (20 and 120 seconds - switch selectable)
3. Panel and remote activation functions
4. Selection for one of five possible parameters to be monitored.

The following is a description of the events controlled by this logic. The start switch energizes the normally closed Fill/Hold Solenoid thus allowing the cuff to fill. Simultaneously the Dump Solenoid whose valve is normally open, is closed, allowing the cuff to pressurize. At some point the DC signal from the pressure transducer has reached its preset level for the selected pressure and the logic closes the Fill/Hold valve preventing further pressurization. After the preset time interval has elasped the Dump valve is re-energized or opened and the pressure in the cuff is allowed to bleed off.

The following is a more exact description, in terms of logic levels, of the operation of the Controller during a single cycle. At the beginning of a pressurization cycle the Dump valve Solenoid is energized and open (Dump signal high) and the Fill/Hold valve is de-energized and closed (Fill/Hold signal low). The outputs from the start latch and pressure latch are both low. There are two inputs

to the control logic, the start switch and the signal from the cuff pressure transducer, these signals in time, generate two outputs, the Fill/Hold and Dump signals. These signals and their actions will be discussed separately.

Fill/Hold: When the start button is pressed the start latch output goes high triggering a negative one-shot. The negative one-shot starts the timer and sets the pressure latch output high. The pressure latch output and start latch output are anded together to generate the Fill/Hold output signal. With both latches high the Fill/Hold signal is high and the cuff fill valve opens.

A comparator monitors the output from the pressure transducer. When the pressure signal equals the reference voltage (set for 30 mmHg or 50 mmHg) the comparator generates a negative pulse, driving the pressure latch output low. The Fill/Hold signal is driven low and the Fill/Hold valve is closed.

Dump: When the timer is started, its output goes high. The inverted timer output is the Dump signal. A low Dump signal closes the Dump valve. When the timer signal goes low at the end of the inflation cycle, the Dump signal is high and the Dump valve opens. The negative edge of the timer output also triggers a negative one-shot which sets the start latch output to low again. The logic is now ready to begin a new inflation cycle.

When the reset switch is set, the timer output is forced and held low. Additionally, the input to the start latch is disconnected from the start button and the input held high, preventing unintentional activation of the device.

A selector switch on the front panel allows five different control signals to be monitored: [1] pressure transducer output, [2] 30 mmHg reference voltage level, [3] 50 mmHg reference voltage level, [4] 20 second timer charge rates, and [5] 2 minute timer charge rate. The two timer charge rates can be monitored only during a timing cycle, otherwise an unchanging zero volt signal is observed. Because of this limitation, adjustment of the timing cycle is best done with the controller activated.

Figure 7 is a diagram of the timing cycle for one activation for the primary control functions. This figure is provided to help in trouble shooting the logic circuit should problems arise with the control function.

Electrical Schematic of Control Section

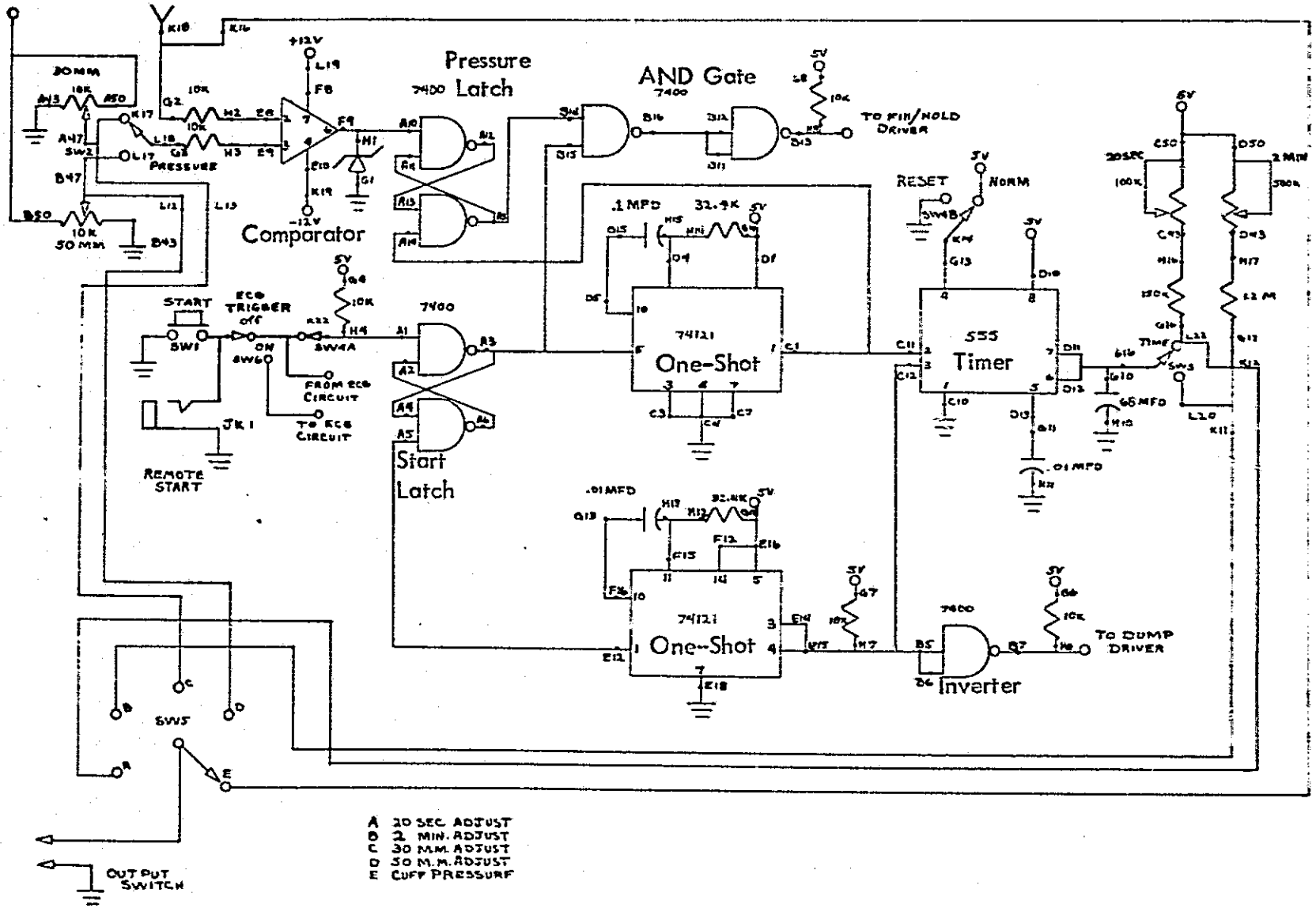

FIGURE 6

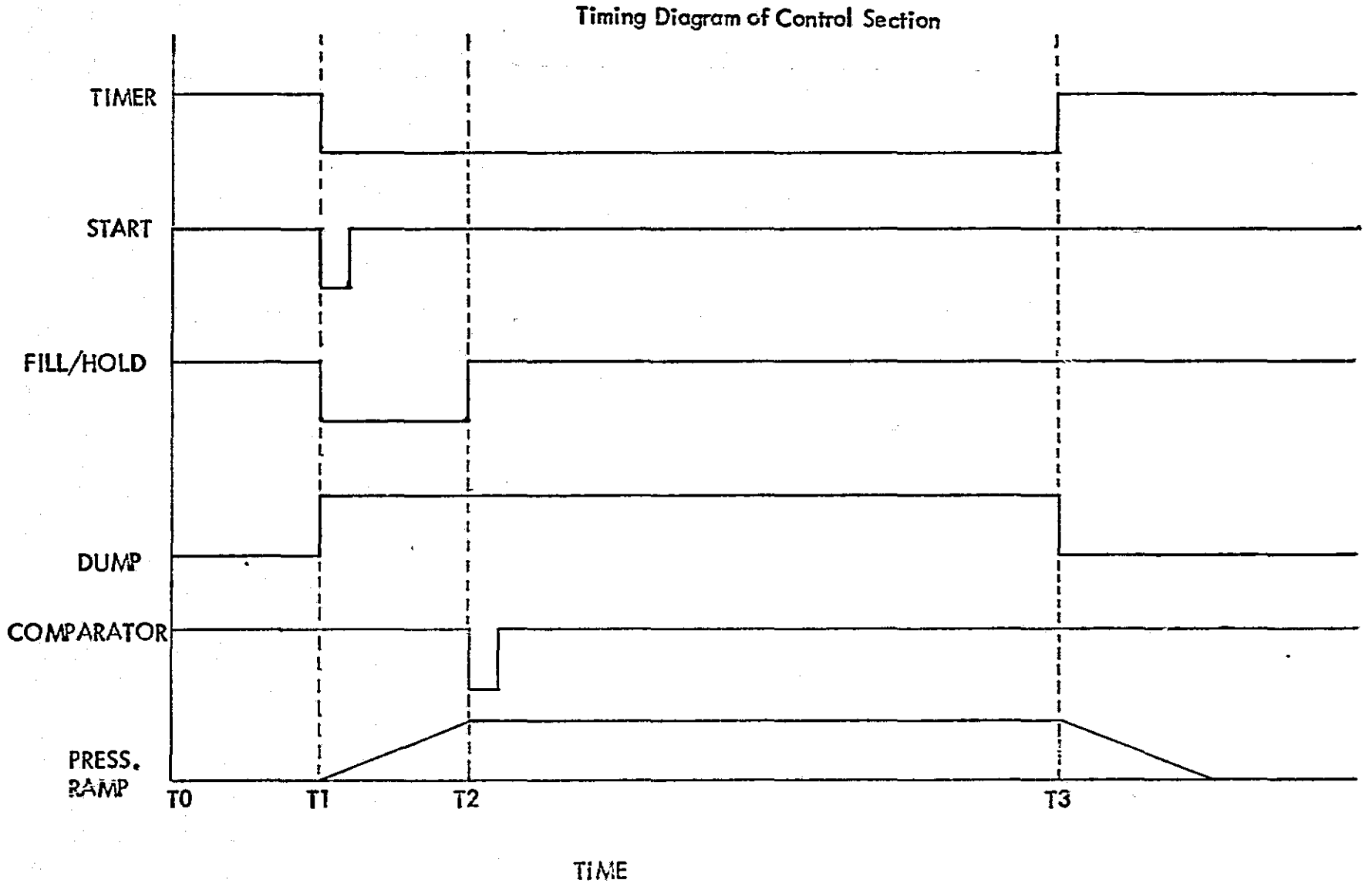
Timing Diagram of Control Section
TIMER
START
FILL/HOLD
DUMP
COMPARATOR
PRESS.
RAMP
T0
T1
T2
T3
TIME

FIGURE 7

SECTION IV

Electrocardiogram Trigger Circuit

The ECG trigger circuit was added to the device to permit activation of the unit at a preselected time after the peak of the ECG R-wave. The timing circuit enables the device to occlude venous return at a highly reproducible point in the ECG waveform if heart rate is relatively constant. This ability may be useful in certain applications of occlusion plethysmography.

Figure 7 presents the schematic for the ECG trigger circuit. The ECG signal is a high voltage signal (± 3 volts maximum) derived from an electrocardiograph. The signal is first filtered by a 13 Hz High Pass Filter and then by a 16 Hz Low Pass Filter. The net effect of this filtering is to eliminate everything but the R-peak of the ECG waveform. The highly filtered R-spike is then detected by the Pulse Detector which in turn outputs a square wave pulse to the Inverter/Amp which inverts the pulse and amplifies it to normal logic levels. At this point the signal is split to a nand gate which drives the light emitting diode on the front panel to indicate circuit function. The signal also goes to a delay circuit which delays the pulse a fixed amount of time. The delay is currently set at 100 milliseconds. After the desired signal delay, the signal goes to a second nand gate. This gate is connected via another gate to the front panel ECG trigger switch. When the trigger switch is properly set both levels in the ECG gate agree and the signal to activate the device is sent. By altering the Delay Circuit timing the

activation of the occlusion cuff may be placed anywhere within the ECG waveform.

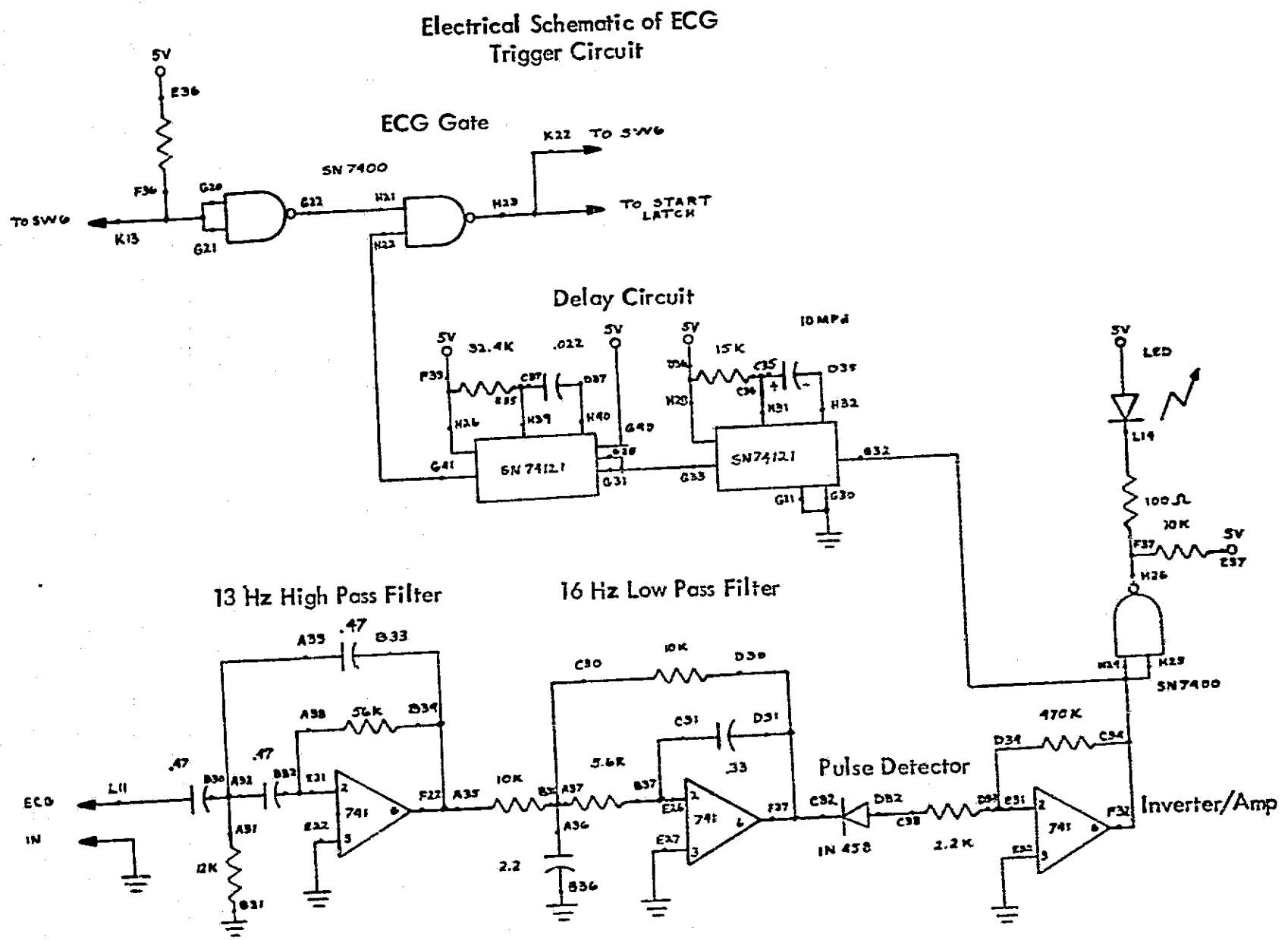
Electrical Schematic of ECG
Trigger Circuit
ECG Gate
SN 7400
K22 TO SW6
TO START LATCH
TO SW6
K13
5V
E36
F36
G20
G21
G22
H21
H22
H23
Delay Circuit
32.4K
.022
15K
10 MPd
SN 74121
SN74121
G41
G31
G33
G32
G11
G30
LED
L14
100 Ω
10K
F37
E37
H26
SN7400
13 Hz High Pass Filter
16 Hz Low Pass Filter
.47
A33
B33
A38
56K
B34
.47
.47
L11
ECG
IN
12K
B31
741
F22
A35
10K
A37
A36
2.2
B36
C30
10K
D30
C31
D31
.33
5.6K
B37
E26
E27
F27
Pulse Detector
C32
D32
IN 458
C33
2.2K
D34
470K
C34
E31
F32
Inverter/Amp

FIGURE 8

SECTION V

Solenoid Drivers

The drivers for the fill and dump solenoid actuated valves contain no special or unique features. They are simply included to provide an electrical schematic and pin connections. The one primary difference in these circuits is that they operate on 12 VDC power and control a fair amount of current to operate the DC solenoid actuated valve. These drivers are located on the main electronic control board.

ELECTRICAL SCHEMATIC OF FILL AND DUMP DRIVERS

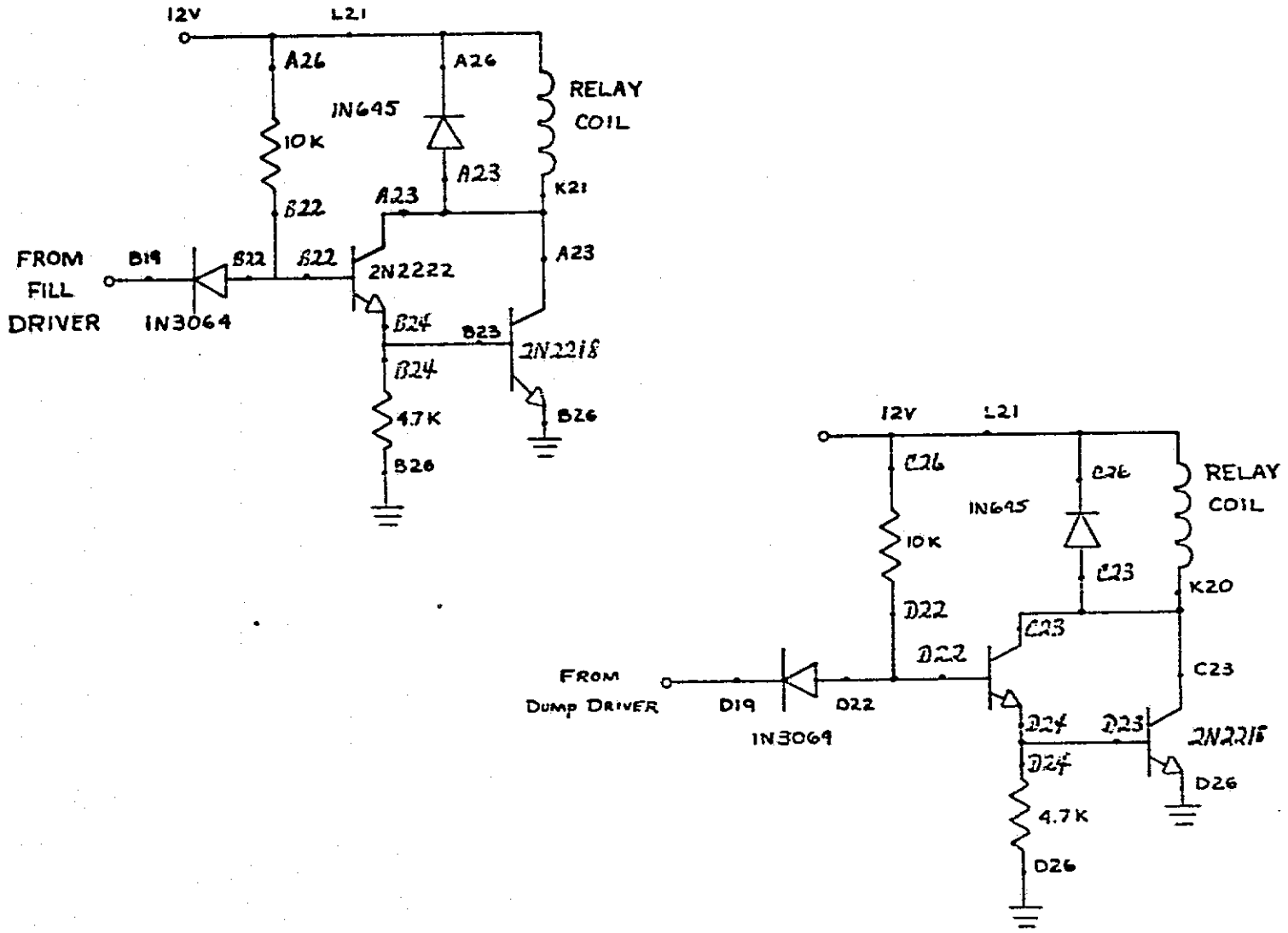

FIGURE 9

SECTION VI

Power Supplies

Figure 9 is a schematic representation of the required power supplies. There are two main power supplies. The Power Tech supplies the ± 12 VDC to the valve solenoids and various operational amplifiers. Derived from this 12 VDC supply by the LM309K is the + 5 VDC power for all logic circuits. The Viatran pressure transducer requires a + 28 VDC power supply and is supplied directly and uniquely by the 28 VDC power supply. Total power draw for the entire unit is considerably less than 3 amp at 115 VAC.

ELECTRICAL SCHEMATIC OF POWER SUPPLIES

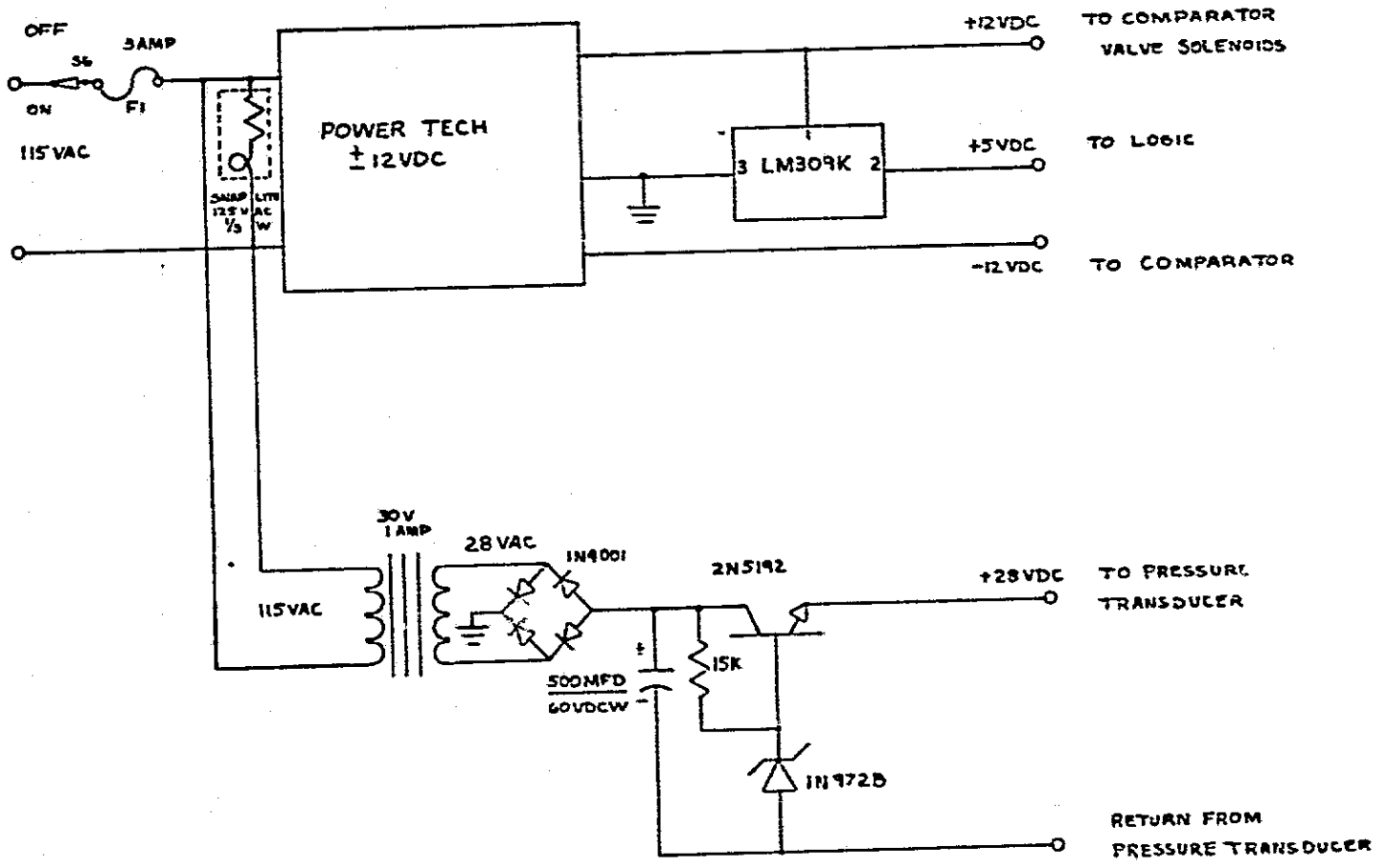

FIGURE 10

APPENDIX A

COMPONENT LISTINGS FOR OCCLUSIVE CUFF CONTROLLER MK1

PARTS LIST

I. Control Circuit

Reference Designation	Part Number or Value	Description	Quantity
C1	.1 MFd	Capacitor	1
C2-C3	.01 MFd	Capacitor	2
C4	68 MFd	Capacitor	1
D1	1N747A	3.6 VDC 400 MW Zener	1
IC1	741	OP-Amp	1
IC2-IC3	SN7400	Quad Nand Gate	2
IC4-IC5	SN74121	One-Shots	2
IC6	NE555	Timer	1
R1-R2	10K	Resistor-Variable	2
R3-R6	10K	Resistor 5%	4
R7-R8	32.4K	Resistor 1%	2
R9	100K	Resistor-Variable	1
R10	500K	Resistor-Variable	1
R11	150K	Resistor 5%	1
R12	1.2M	Resistor 5%	1
R13-R14	10K	Resistor 5%	2
S1	SPST	N.O. Push-Button	1
S2-S3	SPDT	Switch-Toggle	2
S4	DPDT	Switch-Toggle	1
S5	SP5P	Switch-Rotary	1
S6	SPDT	Switch-Toggle	1

PARTS LIST FOR O.C.C.

II. ECG Trigger Circuit

Reference Designation	Part Number	Description	Quantity
D2	IN458	Diode	1
D3		Led	1
C5	.022 MFd	Cap	1
C6	10 MFd	Cap	1
C7-C9	.47 MFd	Cap	3
C10	2.2 MFd	Cap	1
C11	.33 MFd	Cap	1
IC7	SN7400	IC	1
IC8-IC9	SN74121	One-Shot	2
IC10-IC12	741	OP-Amp	3
J1	BNC Female	Connector	1
R15	10K	Resistor 5%	1
R16	32.4K	Resistor 1%	1
R17	15K	Resistor 5%	1
R18	12K	Resistor 5%	1
R19	56K	Resistor 5%	1
R20	5.6K	Resistor 5%	1
R21	70K	Resistor 5%	1
R22	2.2K	Resistor 5%	1
R23	470K	Resistor 5%	1
R24	10K	Resistor 5%	1
R25	100	Resistor 5%	1

PARTS LIST FOR O.C.C.

III. Relay Drive Circuit

Reference Designation	Part Number	Description	Quantity	Manufacturer Part Number
D4-D5	IN3064	Diode	2	
D6-D7	IN645	Diode	2	
I1-I2		Solenoids 12 VDC	2	Decco Model: 28-49
Q1-Q2	2N2222	NPN Transistor	2	
Q3-Q4	2N2218	NPN Transistor	2	
R26-R27	10K	Resistor 5%	2	
R28-R29	4.7K	Resistor 5%	2	

IV. Power Supplies

C12	500 MFd 60VDCW	Cap	1	
D8-D11	IN4001	Diode	4	
D12	IN972B	28V Zener	1	
F1	125V.3 Amp	Fuse	1	
IC13	LM309K	5 VDC Regulator	1	
L1	125VAC 1/3N	Lamp	1	
PS1	± 12 VDC.	Power Supply	1	Power-Tech Model:2K-150-13
Q5	2N5192	NPN Transistor	1	
S7	SPST	Switch-Toggle	1	
T1	Primary: 115VAC Sec: 30 VAC 1 Amp	Transformer	1	
BD-1	8136-UG1-9	IC Board	1	Augat

PARTS LIST FOR O.C.C.

V. Pneumatics

Reference Designation	Part Number	Quantity	Manufacturer Part No.
Cuff	Cuff	1	Tycos
F.C.	Flow Control	1	Clippard: MFC-2
Reg.	Air Regulator	1	Clippard: MAR-1
Val.	Valve	2	Clippard: MAV-2
P.G.	Pressure Gauge	1	Wallace and Tierman Model: NN17363 0-70 mmHg
P.T.	Pressure Transducer	1	Viatran: Model-219
Connector 1-3	Gas Connector	3	Clippard: MQC-3
Clamp	Quick Set Hose Clamp	2	Clippard: 5000-1
Clamp	Reusable Hose Clamp	9	Clippard: 5000-2
Fitting 1	10-32 to 1/8" Hose Fitting	5	Clippard: 11752-3
Adapter	Pipe to Female Adapter	2	Clippard: 15006-2
Hose 1	Twin Vinyl Hose 1/8" ID	10 ft	Clippard: 3814-3
Hose 2	Vinyl Hose 1/8" ID	4	Tygon
X-Coupling	X-Coupling	4	Clippard: 15002-5
Plug	Screw Plug	6	Clippard: 11755
Short Coupling	Short Coupling	6	Clippard: 11999

Reference Designation	Grid Designation	Reference Designation	Grid Designation	Reference Designation	Grid Designation
C1	D15	IC3	P14	R7	D14
C2	D11	IC4	L4	R8	D12
C3	D13	IC5	H15	R9	M47
C4	D10	IC6	L12	R10	K47
C5	L37	IC7	D23	R11	D16
C6	L35	IC8	D31	R12	D17
C7	P30	IC9	D39	R13	D7
C8	P32	IC10	H21	R14	D6
C9	P33	IC11	H26	R15	H36
C10	P36	IC12	H31	R16	H35
C11	L30	IC13		R17	L36
C12		J1		R18	P31
D1	D1	J2		R19	P34
D2	L32	L1		R20	P37
D3		L2		R21	L30
D4	020	PS1		R22	L33
D5	K20	Q1	P23	R23	L34
D6	Q24	Q2	L23	R24	H37
D7	M24	Q3	P25	R25	
D8		Q4	L25	R26	P24
D9		Q5		R27	L24
D10		R1	Q47	R28	025
D11		R2	O47	R29	K25
D12		R3	D2	R30	P35
F1		R4	D3	R31	
IC1	H9	R5	D8		
IC2	P4	R6	D4		

Enlarged View of Control Section with
Parts Locating Grid

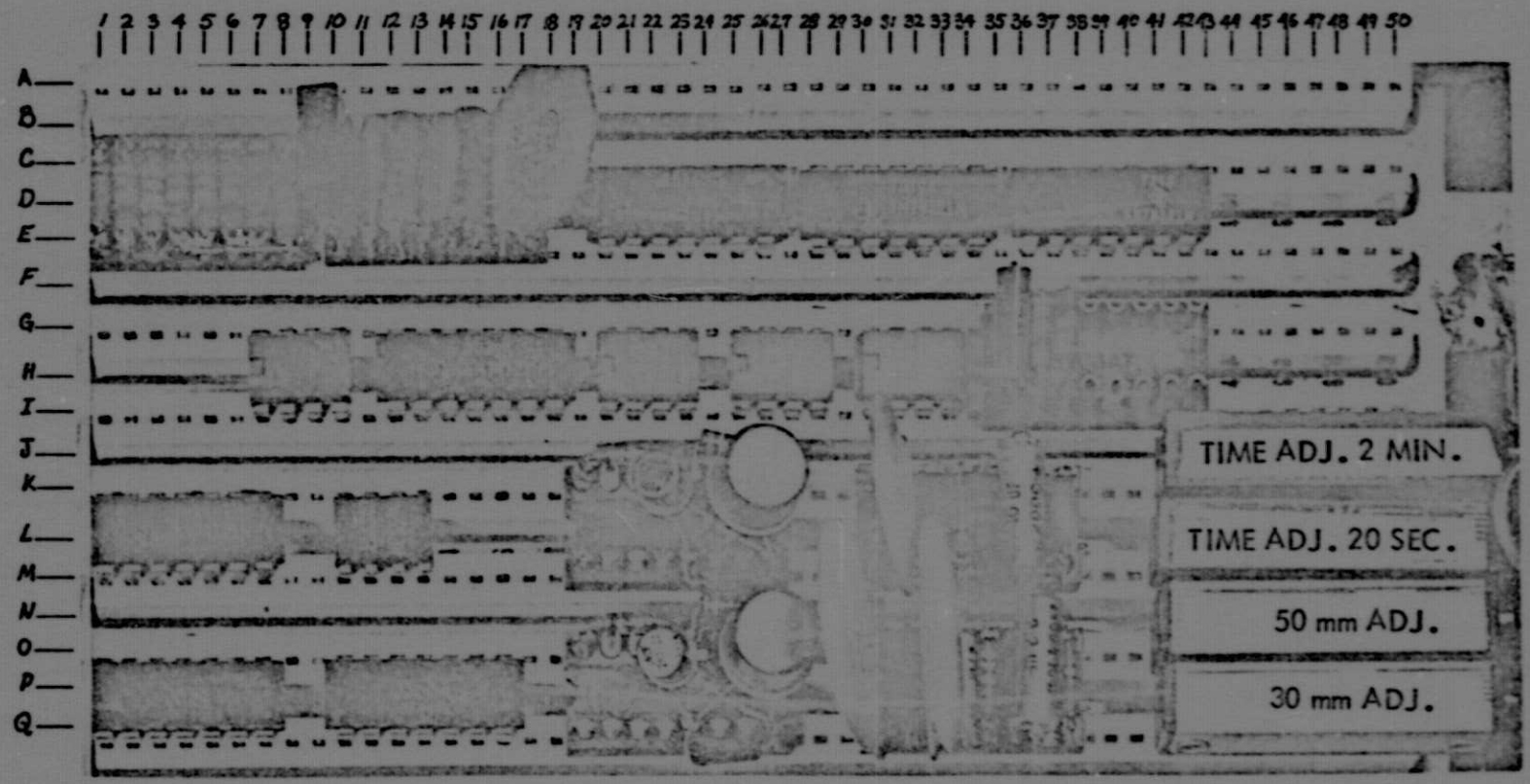

FIGURE 11

APPENDIX B

OPERATIONAL INSTRUCTIONS

I. Preliminary Set up

A. Provide 115 VAC power to unit

B. Provide gas at 100 psi nominal at flow control/regulator connection

C. Place Reset/Normal switch to reset

D. Connect occlusion cuff to front panel connectors

E. Provide ECG for trigger operation if desired

II. Subject Adjustment

A. Place occlusion cuff snugly around limb but not tight enough to retard venous return

B. Select pressure level

C. Select time period

D. Activate unit-by placing Reset/Normal switch to normal

E. Check aneroid to determine that cuff pressure is the one desired. If pressure is high or low adjust accordingly with appropriate pressure adjust.

F. Activate unit and recheck pressure in cuff

III. Test

A. Unit will function at preset level each time it is triggered

B. Duration of operation of unit is indefinite

BIBLIOGRAPHY

1. Thornton, W. E. and G. W. Hoffler. Hemodynamic Studies of the Legs Under Weightlessness. NASA Technical Memorandum, TMX-58154, November 1975, pp 623-635.

2. Gowen, R. J. Evaluation of the Design, Verification and Test Capacitance Plethysmograph. Special Report, January 4, 1971.

3. Dahn, Inge. On Clinical Use of Venous Occlusion Plethysmography of Calf. Acta Chir Scand., 130:42-60, 1965.