NATIONAL AERONAUTICS AND SPACE ADMINISTRATION

Technical Memorandum 33-749

Comparative Assessment of Out-of-Core Nuclear Thermionic Power Systems

W. C. Estabrook
Jet Propulsion Laboratory

D. R. Koenig
Los Alamos Scientific Laboratory

W. Z. Prickett
General Electric Company, Space Division

(NASA-CR-145972) COMPARATIVE ASSESSMENT OF OUT-OF-CORE NUCLEAR THERMIONIC POWER SYSTEMS (Jet Propulsion Lab.) 94 p HC $5.00 CSCL 21C

N76-14193

Unclas
G3/20 06803

JAN 1976
RECEIVED
NASA STI FACILITY
INPUT BRANCH

JET PROPULSION LABORATORY
CALIFORNIA INSTITUTE OF TECHNOLOGY
PASADENA, CALIFORNIA

November 15, 1975

TECHNICAL REPORT STANDARD TITLE PAGE

1. Report No. 33-749	2. Government Accession No.	3. Recipient's Catalog No.
4. Title and Subtitle COMPARATIVE ASSESSMENT OF OUT-OF-CORE NUCLEAR THERMIONIC POWER SYSTEMS		5. Report Date November 15, 1975 6. Performing Organization Code
7. Author(s) W. C. Estabrook, D. R. Koenig, W. Z. Prickett		8. Performing Organization Report No.
9. Performing Organization Name and Address JET PROPULSION LABORATORY California Institute of Technology 4800 Oak Grove Drive Pasadena, California 91103		10. Work Unit No. 11. Contract or Grant No. NAS 7-100 13. Type of Report and Period Covered Technical Memorandum
12. Sponsoring Agency Name and Address NATIONAL AERONAUTICS AND SPACE ADMINISTRATION Washington, D.C. 20546		14. Sponsoring Agency Code
15. Supplementary Notes		

16. Abstract

This report explores the hardware selections available for fabrication of a nuclear electric propulsion stage for planetary exploration. The investigation is centered around a heat-pipe-cooled, fast-spectrum nuclear reactor for an out-of-core power conversion system with sufficient detail for comparison to the in-core system studies previously completed. A survey of competing power conversion systems still indicated that the modular reliability of thermionic converters makes them the desirable choice to provide 240-kWe end-of-life power for at least 20,000 full power hours. The electrical energy will be used to operate a number of mercury ion bombardment thrusters with specific impulse in the range of typically 4000-5000 seconds.

17. Key Words (Selected by Author(s))	18. Distribution Statement
Launch Vehicles and Space Vehicles Space Transportation Spacecraft Design, Testing and Performance Spacecraft Propulsion and Power	Unclassified -- Unlimited

19. Security Classif. (of this report)	20. Security Classif. (of this page)	21. No. of Pages	22. Price
Unclassified	Unclassified	85	

HOW TO FILL OUT THE TECHNICAL REPORT STANDARD TITLE PAGE

Make items 1, 4, 5, 9, 12, and 13 agree with the corresponding information on the report cover. Use all capital letters for title (item 4). Leave items 2, 6, and 14 blank. Complete the remaining items as follows:

3. Recipient's Catalog No. Reserved for use by report recipients.

7. Author(s). Include corresponding information from the report cover. In addition, list the affiliation of an author if it differs from that of the performing organization.

8. Performing Organization Report No. Insert if performing organization wishes to assign this number.

10. Work Unit No. Use the agency-wide code (for example, 923-50-10-06-72), which uniquely identifies the work unit under which the work was authorized. Non-NASA performing organizations will leave this blank.

11. Insert the number of the contract or grant under which the report was prepared.

15. Supplementary Notes. Enter information not included elsewhere but useful, such as: Prepared in cooperation with... Translation of (or by)... Presented at conference of... To be published in...

16. Abstract. Include a brief (not to exceed 200 words) factual summary of the most significant information contained in the report. If possible, the abstract of a classified report should be unclassified. If the report contains a significant bibliography or literature survey, mention it here.

17. Key Words. Insert terms or short phrases selected by the author that identify the principal subjects covered in the report, and that are sufficiently specific and precise to be used for cataloging.

18. Distribution Statement. Enter one of the authorized statements used to denote releasability to the public or a limitation on dissemination for reasons other than security of defense information. Authorized statements are "Unclassified—Unlimited," "U. S. Government and Contractors only," "U. S. Government Agencies only," and "NASA and NASA Contractors only."

19. Security Classification (of report). NOTE: Reports carrying a security classification will require additional markings giving security and downgrading information as specified by the Security Requirements Checklist and the DoD Industrial Security Manual (DoD 5220.22-M).

20. Security Classification (of this page). NOTE: Because this page may be used in preparing announcements, bibliographies, and data banks, it should be unclassified if possible. If a classification is required, indicate separately the classification of the title and the abstract by following these items with either "(U)" for unclassified, or "(C)" or "(S)" as applicable for classified items.

21. No. of Pages. Insert the number of pages.

22. Price. Insert the price set by the Clearinghouse for Federal Scientific and Technical Information or the Government Printing Office, if known.

NATIONAL AERONAUTICS AND SPACE ADMINISTRATION

Technical Memorandum 33-749

Comparative Assessment of Out-of-Core Nuclear Thermionic Power Systems

W. C. Estabrook
Jet Propulsion Laboratory

D. R. Koenig
Los Alamos Scientific Laboratory

W. Z. Prickett
General Electric Company, Space Division

JET PROPULSION LABORATORY
CALIFORNIA INSTITUTE OF TECHNOLOGY
PASADENA, CALIFORNIA

November 15, 1975

Prepared Under Contract No. NAS 7-100
National Aeronautics and Space Administration

PRECEDING PAGE BLANK NOT FILMED

PREFACE

The work described in this report was performed by the Propulsion Division of the Jet Propulsion Laboratory in collaboration with Los Alamos Scientific Laboratory and General Electric Company, Space Division.

PRECEDING PAGE BLANK NOT FILMED

CONTENTS

Introduction 1

Summary 3

Part 1. System Conceptual Design 5

I. Introduction 7

II. Brayton Cycle Power Conversion 8

III. Rankine Cycle Power Conversion 10

IV. Liquid Metal Magnetohydrodynamic Power Conversion . . . 11

V. Thermionic Power Conversion 12

References 16

Part 2. Nuclear Systems Analysis 25

I. Introduction 27

II. Design Options for Nuclear Thermionic Systems 27

III. Parametric Heat Transfer Study 29

IV. Reactor Criticality 31

V. Conclusions 31

Part 3. Spacecraft Systems Analysis 39

I. Study Results 41

II. Guidelines and Constraints 44

A. Mission Constraints 45

B. Shielding Constraints 45

C. Thermionic Integration Constraints 46

D. Thermionic Technology Constraints 46

E. Out-of-Core Thermionic Power System Constraints . . 47

III. High-Temperature Reactor Designs 47

A. End-Thrust, 240-kWe Configuration 47

B. End-Thrust, 120-kWe Configuration 51

C. Side-Thrust, 120-kWe Configuration 54

IV. Low-Temperature Reactor Designs 56

A. End-Thrust, Out-of-Core, 240-kWe Configuration . . . 56

B. End-Thrust, In-Core, 240-kWe Configuration 60

References 62

TABLES

1-1. Nuclear space power conversion options 18

2-1. Design options for nuclear thermionic systems 33

2-2. Emitter temperature considerations 33

3-1. Propulsion subsystem mass summary: high-temperature thermionics, 240-kWe system 63

3-2. Propulsion system mass summary: high-temperature thermionics, 120-kWe system, end-thrust spacecraft . . . 63

3-3. Propulsion subsystem mass summary: high-temperature thermionics, 120-kWe system, side-thrust spacecraft . . . 64

3-4. Propulsion subsystem mass summary: low-temperature thermionics, 240-kWe system 64

3-5. Mass breakdown for high-temperature, 240-kWe, in-core, thermionic NEP system (two reactors in tandem) 65

3-6. Mass breakdown for high-temperature, 240-kWe, in-core, thermionic NEP system (one reactor) 66

3-7. Mass of reactor assembly 67

3-8. Mass breakdown for high-temperature, 240-kWe, out-of-core thermionic system 67

3-9. Mass summary: 120-kWe, end-thrust, in-core thermionic system 68

3-10. Mass summary: 120-kWe, side-thrust, in-core thermionic system 69

3-11. Baseline, out-of-core, low-temperature power system characteristics 70

3-12. Mass breakdown for low-temperature, 240-kWe, out-of-core system 71

3-13. Mass breakdown for low-temperature, 240-kWe, in-core system 72

FIGURES

1-1. NEP development schedule 19

1-2. Space power requirements, 1960-1990 19

1-3. Proposed nuclear electric propulsion end-thrust spacecraft configuration 20

1-4. Closed Brayton cycle 20

1-5. Closed Rankine cycle 21

1-6. Liquid metal magnetohydrodynamic cycle 21

1-7. Thermionic cell, internally fueled 22

1-8. TFE assembly for electric propulsion reactor 22

1-9. Thermionic reactor assembly 23

1-10. Thermionic reactor assembly, elevation view 24

2-1. Heat pipe/fuel element arrangements 34

2-2. Heat pipe parametric study: 1-MW thermal reactor core, 0.2 m diam x 0.2 m long 35

2-3. Heat pipe parametric study: 1-MW thermal reactor core, 0.3 m diam x 0.3 m long 35

2-4. Heat pipe parametric study: 1-MW thermal reactor core, 0.4 m diam x 0.4 m long 36

2-5. Heat pipe parametric study: 0.5-MW thermal reactor core, 0.3 m diam x 0.3 m long 36

2-6. Heat pipe parametric study: 2-MW thermal reactor core, 0.3 m diam x 0.3 m long 37

2-7. Heat pipe parametric study: 1-MW thermal reactor core, 0.35 m diam x 0.35 m long 37

3-1. NEP stage configuration, 240-kWe, high-temperature out-of-core design 73

3-2. Conceptual arrangement of out-of-core thermionic powerplant components in the vicinity of the reactor 74

3-3. Out-of-core thermionic power system parameters . . . 74

3-4. 240-kWe NEP tug 75

3-5. Out-of-core reactor and thermionic assembly, 240-kWe system (net) 76

3-6. Integration of out-of-core reactor assembly with spacecraft 76

3-7. Neutron shield mass: 240-kWe system out-of-core thermionics 76

3-8. Tungsten shield mass: 240-kWe system out-of-core thermionics 76

3-9. Equivalent doses to power conditioning, Jupiter orbit 77

3-10. Primary shield alterations required to offset Jupiter radiation 77

3-11. Primary shield mass additions required for Jupiter environment radiation 78

3-12. Shuttle integration: 240-kWe system 78

3-13. 120-kWe end-thrust NEP stage (in-core thermionics) 79

3-14. Out-of-core power supply dimensions, 120-kWe system . . . 80

3-15. Out-of-core revised configuration: 120-kWe end-thrust system 80

3-16. Neutron shield mass: 120-kWe end-thrust system 80

3-17. Shuttle integration: 120-kWe out-of-core end-thrust system 80

3-18. General arrangement: 120-kWe NEP stage side-thrust configuration 81

3-19. Out-of-core integration schematic: 120-kWe side-thrust system 82

3-20. Shuttle integration: 120-kWe side-thrust system 82

3-21. Primary radiator area 82

3-22. Primary radiator requirements 83

3-23. Out-of-core, 240-kWe, low-temperature design 84

3-24. Shuttle payload longitudinal center-of-gravity limits: 240-kWe, low-temperature, out-of-core design 84

3-25. Baseline, in-core, 240-kWe, low-temperature reactor . . . 84

3-26. In-core, 240-kWe, low-temperature design 85

3-27. Shuttle payload longitudinal center-of-gravity limits: 240-kWe, low-temperature, in-core design 85

ABSTRACT

This report explores the hardware selections available for fabrication of a nuclear electric propulsion stage for planetary exploration. The investigation is centered around a heat-pipe-cooled, fast-spectrum nuclear reactor for an out-of-core power conversion system with sufficient detail for comparison to the in-core system studies previously completed. A survey of competing power conversion systems still indicated that the modular reliability of thermionic converters makes them the desirable choice to provide 240-kWe end-of-life power for at least 20,000 full power hours. The electrical energy will be used to operate a number of mercury ion bombardment thrusters with specific impulse in the range of typically 4000-5000 seconds.

INTRODUCTION

There is a continuing interest in nuclear electric propulsion (NEP) for planetary missions to Jupiter and beyond. Detailed exploration of the outer planets and their satellites is expected to include orbiters, landers, entry probes, robot operations, and even sample returns to Earth orbit. This level of exploration is expected to begin in the 1990's and will require advanced forms of propulsion. NEP is presently considered a prime candidate.

During the past three years, significant new work has been accomplished in several technology areas associated with nuclear power generation. If these efforts can be brought to fruition, nuclear space power can benefit greatly. For this reason, a short study was initiated to re-evaluate nuclear power and electric propulsion concepts which included the new technology.

The results of the three-month technology survey of NEP are presented in three parts as follows:

(1) System conceptual design by Jet Propulsion Laboratory (JPL).

(2) Nuclear system analysis by Los Alamos Scientific Laboratory (LASL).

(3) Spacecraft system analysis by General Electric Company, Space Division.

The purpose of this study was to investigate the feasibility of an out-of-core NEP system in sufficient detail to allow comparisons to previously conducted in-core studies. The study was sponsored by NASA, with the primary responsibility delegated to JPL. Portions of the study were subcontracted to LASL and GE.

The nuclear system analysis, including conceptualization of the fast spectrum nuclear reactor and design of suitable heat pipes for thermal power transport from the reactor to the out-of-core power conversion was done by LASL.

The General Electric Company Space Division was assigned the spacecraft system analysis, which included providing spacecraft configurations compatible with the space shuttle constraints of size, mass, and center of gravity.

JPL provided the basic system management, established the technology and state of the art, and provided guidance through consultation for each step of component design and component interface. Power subsystem requirements, radiation shielding, performance tradeoffs, and many other parameters were specified by JPL.

The potential improvements because of availability of an out-of-core heat exchanger were considered for Rankine, Brayton, liquid metal MHD, and thermionic power conversion. Lifetime of 10 to 15 years maximum was desired. Modular redundancy for elimination of single point failures was a serious problem for all except the thermionic power conversion system. This modular capability of the thermionic power conversion system appears to be more important than the research programs which now promise lower temperature, higher efficiency, and relaxed mechanical tolerances.

SUMMARY

This investigative study revealed that a heat-pipe-cooled reactor with out-of-core thermionics will improve nuclear electric propulsion when developed for nuclear space power. The parametric evaluation of a heat-pipe-cooled reactor revealed theoretical feasibility and potential system improvements as follows:

(1) As compared to an in-core system of the same power level, a smaller reactor is needed.

(2) Reliability is gained through fuel-to-heat-pipe geometry with several heat pipes contacting each fuel element and each heat pipe contacting several fuel elements. Also the system is no longer burnup-limited, being much more tolerant of fuel swelling.

(3) A versatile system with respect to power level is available. Fuel elements, heat pipes, and thermionics can be designed in a modular pattern which would be readily adaptable as power-producing components to satisfy a wide range of power requirements.

In order to achieve the indicated advantages, several key technology developments are required as follows:

(1) Methods are required to improve heat transfer from nuclear fuel to heat pipes (brazing technology).

(2) Heat pipes must be designed and tested to assure high flux density with reliable startup and operation and long lifetime.

(3) Materials development must be continued to provide good thermal conductivity and good electrical isolation while exposed to temperatures up to 2000 K. Thermal expansion of these materials must match the heat pipe and thermionic converter materials.

(4) The thermionic research program must produce lower-temperature, high-efficiency thermionic converters and related electrical components.

(5) Chemical and physical compatibility between nuclear fuel and heat pipes must be demonstrated.

(6) Nuclear fuel composition and configuration for 3% burnup requires definition.

(7) Reliable thermionic converter collector cooling system design is needed to eliminate the single-point failure mechanism.

(8) An optimized low voltage/high current bus bar interconnect system for thermionic converters and their power processors requires further study.

No major changes are required in spacecraft design. Reactor and power converters of the out-of-core system will allow a slight reduction of the shield diameter compared to the in-core system. However, the NEP spacecraft shares a common problem with other users of the shuttle. The shuttle payload bay loading center of gravity constraints will impose further requirements on spacecraft design to maximize payload. Additional propellant and/or higher power levels will help.

PART 1. SYSTEM CONCEPTUAL DESIGN

W. C. Estabrook
Jet Propulsion Laboratory

PRECEDING PAGE BLANK NOT FILMED

I. INTRODUCTION

An initial study (Ref. 1-1) has indicated the need for lead time of 14 years from the initiation of nuclear electric propulsion (NEP) development until mission flight. Key steps in such a program are shown in Fig. 1-1. A shorter time period for development may be obtained mainly by reducing system testing and by increasing overlap of development areas. To decrease the schedule below 12 years will, however, increase development cost and risk beyond the point where mission accomplishment could be assured. Cost of development for NEP, including first mission flight, is expected to be on the order of $500,000,000.

The engineering state-of-the-art must be significantly advanced before detailed exploration of the outer planets of the Solar System can commence. Design lifetime for the existing spacecraft technology has been carefully reviewed and is currently being extrapolated to 5 to 6 years. But the existing propulsion technology, even when shuttle-launched, would require flight times of at least 8 to 15 years to deliver very small orbiters to the far outer planets with a Jupiter swingby. The development of advanced propulsion is needed to increase mission payload, to shorten mission flight time and, in addition, to provide 10 to 15 years of extended mission exploration at the destination planet, including sample returns to earth orbit.

The previous work accomplished by NASA and the Atomic Energy Commission (AEC, now ERDA) has shown NEP to be a potentially versatile, economical candidate for this role (Ref. 1-2). The first mission in the 1973 NASA payload model for which this advanced propulsion is required is the 1990 Jupiter satellite orbiter/lander (PL 23) (Ref. 1-3). Advanced technical studies of this mission for NEP were initiated at JPL during FY 1975. Any planning for this mission is expected to include the development of NEP. The earliest date for which new development can be planned is FY 1977, which will allow approximately 14 years for development. This appears to be almost optimum for a 1990 launch. A delayed development start for another year would move the program into a decidedly higher risk schedule; a delay of two years would require a higher total cost program.

Considering the power requirement increases in U. S. space programs over the past 15 years, it appears that this mission fits well into an already established pattern. Figure 1-2 illustrates this. Prior to schedule slippage,

NASA preliminary planning called for the use of solar electric propulsion (SEP) for missions with 1979 and 1980 launch schedules, including the out-of-the-ecliptic, with a 10-kWe requirement, and the Encke rendezvous, with a 15- to 20-kWe requirement. These are missions near the sun and therefore can use conventional solar power and would provide experience in the utilization of electric propulsion in space. However, the high energy interplanetary missions to the outer planets are dependent on the development of nuclear power. The possibility exists for the earlier use of a nuclear powerplant in a large space station. Such a requirement would place additional urgency into a development program for nuclear power.

The ability to explore the far outer planets in any detail appears to be dependent upon the development of a high power, lightweight, nuclear powerplant. Such a space nuclear powerplant would consist of a fast spectrum nuclear reactor with related controls, a power conversion system, a waste heat dissipation system (space radiator), a nuclear radiation shield as required, a power conditioning system, and the thrusters. Figure 1-3 is a block diagram of a proposed space nuclear powerplant layout.

The major advantages of nuclear space powerplants lie in their ability to achieve low specific weight, long life, small volume, and independence of the ever-changing space environment. There is no need for orientation, energy storage when shaded from the sun, or the associated sensing devices required for most solar powered systems.

Several conversion methods have been proposed for nuclear space power systems, and each has advantages and disadvantages. We briefly explored the predominant parameters of the Brayton, the Rankine, the liquid metal magnetohydrodynamics (LMMHD), and the thermionic power conversion systems. Table 1-1 gives the major disadvantages of each system.

II. BRAYTON CYCLE POWER CONVERSION

Several variations of the Brayton cycle power conversion system have been investigated at the NASA Lewis Research Center (Ref. 1-4). The basic system consists of a closed working gas loop and four major subsystems. This cycle utilizes an inert working gas. Typical for this service is a helium-xenon gas mixture with a molecular weight equal to 83.8, which offers

the inherent advantage of a single noncondensing loop with a noncorrosive working medium. In the Brayton cycle the working fluid is continuously in the gaseous state. Cold gas is compressed and passed through a recuperator, where it is preheated by gas from the turbine exhaust. The gas is then heated to its maximum temperature in the nuclear reactor and heat exchanger and expanded in the turbine which drives the compressor and the alternator. The turbine exhaust gas then passes through the recuperator, where it transfers some of its heat to the gas leaving the compressor. The remaining heat cannot be used and therefore is radiated to space. The cooled gas from the radiator enters the compressor and repeats the cycle. Figure 1-4 (from Ref. 1-5) depicts a typical Brayton cycle loop. If radiator temperature can be increased, the Brayton power system provides a potentially attractive approach for supplying the electrical power requirement of manned space missions during which trained flight personnel could provide necessary maintenance. Efficiencies of 25% or better can be obtained across a wide range of turbine inlet temperatures.

NASA Lewis investigations into the use of the Brayton cycle for power conversion resulted in test hardware with an electrical output range to 15 kWe and a study phase for units to 160 kWe. A typical modular system would consist of a number of 20-kWe Brayton cycle units with electrical outputs connected in parallel to provide redundant reliability. Some flexibility exists in radiator design and area requirements. Similar to turbine inlet temperatures, the same set of engine hardware can accommodate a wide range of compressor inlet temperatures permitting radiator area tradeoffs against system efficiency.

The materials available for turbine component fabrication are temperature-limited, which requires that a relatively low turbine inlet temperature of 1220 K (1740°F) be used. This results in a very low waste heat radiator inlet temperature of 530 K (500°F), which in turn increases the size requirements for the radiator, the plumbing, and the heat exchangers. (Gas plumbing must be larger than that used for a liquid system of equivalent power.)

For the long missions involved, gas containment is of prime concern. To eliminate single point failure, reasonable system redundancy must be provided. This, of course, means that the total system must be comprised

of many completely independent smaller systems. Of course, this arrangement adds plumbing and increases the probability of leakage. Rotating machinery with rare exceptions requires maintenance at regular intervals. The degree of reliability required for long unmanned space missions (5 to 6 years) places a reasonable doubt on the use of any system which is fully dependent on rotating machinery.

III. RANKINE CYCLE POWER CONVERSION

The Rankine cycle coupled to a nuclear reactor has been subjected to in-depth investigations which resulted in hardware fabrication and evaluation. The SNAP 8 electrical generating system has been studied for applicability to both manned and unmanned missions (Ref. 1-5).

The characteristic feature of the Rankine cycle is the phase change in the working fluid. In this cycle a liquid is boiled to produce vapor which expands through a turbine driving an alternator and pump. After the expanded vapor is condensed and subcooled, it is pressurized by the pump and enters the boiler to repeat the cycle. Figure 1-5 (Ref. 1-5) depicts a typical closed-loop Rankine cycle. A typical fluid for this cycle is potassium, which has a low vapor pressure and good corrosion-resistant properties at high temperatures. It has little corrosion reaction with stainless steel up to ≈1150 K, and it can be used with coated columbium up to ≈1500 K. Because potassium has a much higher heat transfer coefficient than other liquid metals which could be reliably used for this cycle, a significant improvement in the condenser radiator mass can be realized.

Many of the disadvantages cited for the Brayton system are repeated in the Rankine system, such as rotating machinery with its inherent lack of reliability over long periods of time and the complexity of several small systems that would probably be introduced for the sake of redundancy to eliminate single point failures.

The liquid content of the working fluid, particularly in the final stage of the turbine, is a problem which can be lowered by increasing the system temperatures. However, complete liquid elimination cannot be achieved, and thus turbine erosion is always present.

IV. LIQUID METAL MAGNETOHYDRODYNAMIC POWER CONVERSION

Liquid metal magnetohydrodynamic power conversion (LMMHD), which has been the subject of a research and development project by NASA at JPL (Ref. 1-6), provides, like the Brayton and Rankine, a method for power conversion of heat to ac electrical power. This method utilizes the heat source to produce a high-velocity liquid metal stream which passes through a magnetic field and produces electrical power. Of the known working fluids, the two-component lithium-cesium system provides a higher efficiency than a single-component system using potassium. Even though the lithium-cesium fluids are more expensive, the superior efficiency provides a lower overall operational cost than a less efficient (≈13.5 vs 6%) system using potassium.

In the two-component separator cycle shown in Fig. 1-6 (from Ref. 1-6), lithium (a liquid metal with a low vapor pressure) is heated and mixed with cesium (a liquid metal with a high vapor pressure), which results in a two-phase mixture. The vapor (cesium) performs work on the liquid (lithium), accelerating it to high velocity in a nozzle. After separation of the vapor, the high-velocity liquid flows through the sinusoidally excited MHD generator and produces ac electric power. After power extraction, the remaining kinetic energy circulates the liquid (lithium) through the heat source to the mixer. The vapor (cesium) which was separated flows through a heat exchanger where it is condensed and the removed heat is radiated to space. Next the cesium is pressurized by a pump and returned to the mixer to repeat the cycle.

The high temperature of 1370 K (≈2000°F) plus the high-velocity fluid involved in this system result in corrosion and erosion problems. Very few materials have been found which possess a reasonable degree of corrosion resistance to high-temperature liquid lithium. Haynes-Stellite No. 25, a cobalt base alloy (20 Cr, 15 W, 10 Ni), will withstand the corrosion but is not suitable as a structural material at 1370 K. In the separator, where inclined plates receive continual impact by high-temperature, high-velocity droplets of liquid lithium, the Haynes-Stellite No. 25 alloy could not withstand this bombardment without severe erosion and mass transfer. Mechanically attached sheets of niobium-1% zirconium alloy have been used under

similar conditions for mass transfer protection. This protection has been proven to be satisfactory with a maximum mass transfer deposit buildup of 0.38 mm (0.015 in.) per year.

Extensive development activity is needed before LMMHD can compete as a serious contender in the nuclear space power program. This development activity must resolve problem areas such as:

(1) Materials for long-term application involving high-temperature, high-velocity liquid metals.

(2) A two-component separator with low friction losses for nearly complete separation of the vapor from the liquid phase.

(3) An acceptable condenser design for high-pressure metal vapor.

Once these above problem areas are resolved we must also consider the potential requirement for redundant systems for single point failure elimination.

V. THERMIONIC POWER CONVERSION

NASA-JPL was heavily committed to an in-core thermionic nuclear space power conversion system study until the time of termination on January 5, 1973. The basic power subsystem consisted of a liquid-metal-cooled, fast-spectrum thermionic reactor, a heat rejection subsystem using heat pipes, a lithium hydride (LiH) neutron shield, electrical cabling, a low dc voltage to high ac voltage power inverter, and a power level control subsystem (Ref. 1-7). This in-core power system utilized the Gulf General Atomic (Ref. 1-8) "flashlight" design F series thermionic cells as shown in Fig. 1-7 (from Ref. 1-8). Six F series cells were encased in series in a sheath tube to form a thermionic fuel element (TFE) as shown in Fig. 1-8 (Ref. 1-8). The reactor vessel fabricated from niobium-1% zirconium alloy would contain 162 TFE's for the nominal 120-kWe system with 20,000 equivalent full power hours. The in-core thermionic fuel element pressure vessel assembly plus the niobium-clad beryllium oxide (BeO) control reflectors are shown in Figs. 1-9 and 1-10 (Ref. 1-8). The emitters of these internally fueled thermionic cells would be subjected to temperatures of 1800-1900 K (Ref. 1-8).

An overall end-of-life system conversion efficiency of 8.7% was predicted (Ref. 1-9), although individual converter efficiency was estimated at approximately 14%.

For optimum performance, thermionic cells must be constructed with very close mechanical tolerances. Interelectrode spacing, for instance, may be of the order of 0.25 mm. When internally fueled, these cells are subjected to pressures caused by fuel swelling, with resultant damage which could reduce efficiency or fully "short-out" the cell. In-core fueling also subjects the cell to extreme nuclear radiation environment which could contaminate the interelectrode plasma and possibly embrittle the emitter and/or collector material (Ref. 1-10). The thermionic diode is limited to producing large dc currents at a low voltage which requires special handling and conditioning.

Nuclear electric propulsion studies have centered around the high-temperature in-core configuration. This concept dictates that the reactor, the thermionic diodes, the electrical wiring and the provisions for diode collector cooling all be one assembly and be placed in one container – a pressure vessel if liquid metal cooling is used as shown in Fig. 1-10. This requires a large and complex reactor assembly, susceptible to single point failure. However, the basic problems have been studied and the system feasibility has been established.

A low-temperature in-core design which takes advantage of new thermionic concepts would retain all the problems found in the high-temperature in-core design plus the added undesirable feature of a larger radiator made necessary by the lower waste heat rejection temperature. The additional mass of this radiator would consume valuable shuttle payload capability.

By removing the thermionic diodes and related hardware from the reactor assembly and transferring heat by means of high-temperature heat pipes, a more compact reactor may be designed. With proper component arrangement a considerable shadow shield weight saving can be realized. A high-temperature (1800-2000 K) out-of-core concept has been studied which requires a tungsten technology. Besides being heavy and expensive, tungsten is brittle at room temperature and does not join well with any other material. A research program to solve these programs could ultimately lead to a smaller reactor and overall system improvement.

Thermal losses will be encountered during transport of heat via heat pipes from the reactor to the out-of-core thermionic diode emitters even under the most carefully controlled conditions. These losses can be minimized if the reactor enclosure is close coupled to the thermionic diode enclosure (joined, for instance, with a common structural member as shown in Fig. 1-3).

A lower temperature (1400-1600 K) out-of-core concept is dependent upon the development of reliable high-efficiency, low-temperature thermionic converters, which are presently under study (Ref. 1-11). If these low-temperature converters are feasible, the selection of usable materials will greatly improve, and the technical prospects are very good for the development of an out-of-core nuclear thermionic system. Thermal losses would still exist and the lower (800-850 K) waste heat rejection temperature would increase the radiator size by a factor of 2-2.5. With the higher efficiency converter, reactor size is smaller with a smaller percentage of waste heat, and therefore the system can be optimized by a parametric study of radiator size vs converter efficiency.

The development of out-of-core nuclear thermionic space power is heavily dependent upon new technology in several areas. First, there is a requirement for the development of heat pipes for isothermal transfer of large quantities of heat. Brazing of heat pipes to the nuclear fuel elements appears to be necessary for minimizing fuel temperature and associated fuel swelling. Heat pipe reliability must be studied and startup and variable load conditions examined. Second, there is a need for the development of materials with dual capability – good thermal conductivity and good electrical isolation. Cermet materials being developed at JPL are strong candidates for this service. Thermionic converters must be electrically connected in series to raise to a convenient usable level the very low voltage generated by each individual converter. The emitter of the converter must receive heat from the heat pipe and at the same time be electrically insulated from it. These same parameters must be satisfied for the collector of the converter at the point where the waste heat is transferred to the coolant. Finally "low"-temperature, high-efficiency thermionic converters, as stated before, are essential to improve the selection of workable structural materials.

The potential advantages for an out-of-core system include the following:

(1) A less complex manufacturing procedure can be utilized since the individual thermionic converters can be assembled and tested simultaneously and independently of the reactor system.

(2) The thermionic converters are removed from the hostile reactor environment, thus eliminating the stresses on the emitter caused by fuel swelling and reducing the possibility of interelectrode plasma contamination (Ref. 1-10).

(3) The modular redundancy of the in-core thermionic system is retained in the out-of-core configuration. The inherent reliability of the thermionic power conversion system is one of its major features.

As previously noted in the discussion of space power requirements, proposed deep space missions are dependent on the development of nuclear electric propulsion (NEP). A single NEP system design would be adequate for all missions from Jupiter to Pluto. The need exists, and therefore the following recommendations are submitted:

(1) The high-temperature, in-core system previously defined should remain as the baseline concept until new technology is proven. The in-core system appears heavier than desirable, but basic feasibility has been established.

(2) Recently developed cermet materials should be fully evaluated for joining compatibility with tungsten rhenium alloys. Successful cermet-to-niobium joints have been made; however, these materials have similar coefficients of expansion, whereas the coefficient of expansion for tungsten may be more difficult to match with cermets.

(3) Thermionic converters should be placed under intensive study so that high-efficiency thermionics are fully defined over a range of temperatures at an early date. With this knowledge, new system temperatures can be defined and component selection can begin. System optimization is going to require an evaluation of series-connected thermionic diodes to determine the optimum connector

matrix which minimizes thermal bleed from the next converter emitter to the previous converter collector. At the same time, this connector should be the best possible electrical conductor to reduce $I^2 R$ losses.

(4) Since there is very little to be gained from it, the low-temperature, in-core system concept should be dropped from further study. Compared to the high-temperature, in-core concept, there is the added disadvantage of a lower waste heat rejection temperature with the requirement for a larger radiator.

REFERENCES

1-1. Stearns, J. W., et al., "Status Report of Nuclear Electric Power and Propulsion Studies for Space Applications," for NASA-OAST Research Division, Apr. 1974.

1-2. Advanced Propulsion Comparison Study, edited by I. L. Helms, Space Nuclear Systems Division of USAEC and NASA, Washington, D. C., Apr. 1, 1973.

1-3. "The 1973 NASA Payload Model - Space Opportunities," National Aeronautics and Space Administration, Oct. 1973.

1-4. Miller, R. R., "Information on Nuclear Space Power Systems," Internal Memorandum, NASA Lewis Research Center, Cleveland, Ohio, Oct. 1969.

1-5. "Guidebook for the Application of Space Nuclear Power Systems," Report of the Committee on the Nuclear Space Program Atomic Industrial Forum, Inc., 850 Third Avenue, New York, Jan. 1969.

1-6. Phen, R. L., "Liquid Metal Magnetohydrodynamics Technology Transfer Feasibility Study," Report 1200-59, Jet Propulsion Laboratory, Pasadena, Calif., May 1973 (an internal document).

1-7. Mondt, J. F., Peelgren, M. L., Nakashima, A. M., Hsieh, T. M., Phillips, W. M., and Kikin, G. M., Nuclear Electric Propulsion Stage Requirements and Description, Technical Memorandum 33-647, Jet Propulsion Laboratory, Pasadena, Calif., Aug. 1974.

1-8. Carney, H. C., et al., "Study of Unit Costs of Thermionic Reactors," Gulf GA-A-12350, Gulf General Atomic Co., San Diego, Calif., Jan. 1973.

1-9. "Nuclear Electric Propulsion Mission Engineering Study," Document No. 73SD4219, General Electric Co., Valley Forge, Penn., Mar. 1973.

1-10. Podney, W. N., Garelis, E., Koponen, B. L., Layton, J. P., "Fast Reactor Systems for Secondary Space Power," URCL-71149, Lawrence Radiation Laboratory, Livermore, Calif., June 1968.

1-11. Britt, E. J., Fitzpatrick, G. O., Hansen, L. K., and Rasor, N. S., "Advanced Thermionic Energy Conversion," C00-2263-2, Rasor Associates, Inc., 420 Persian Drive, Sunnyvale, Calif., Aug. 1974.

Table 1-1. Nuclear space power conversion options

Brayton	Large radiator
	Large plumbing
	Gas containment
	Rotating machinery
Rankine	Rotating machinery
	Turbine erosion
LMMHD	High velocity fluids
	Erosion
	Friction losses
Thermionic	High temperature
	Close mechanical tolerances
	Low voltage DC

ORIGINAL PAGE IS
OF POOR QUALITY

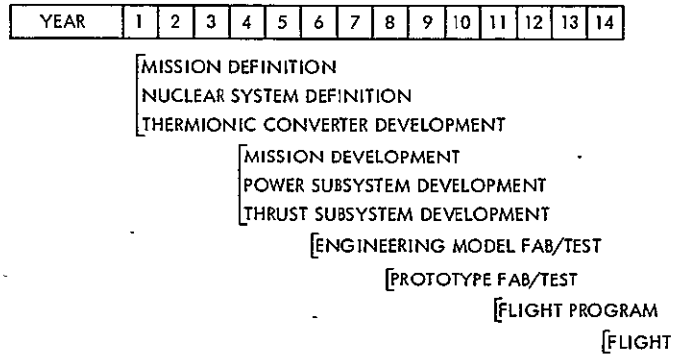

Fig. 1-1. NEP development schedule

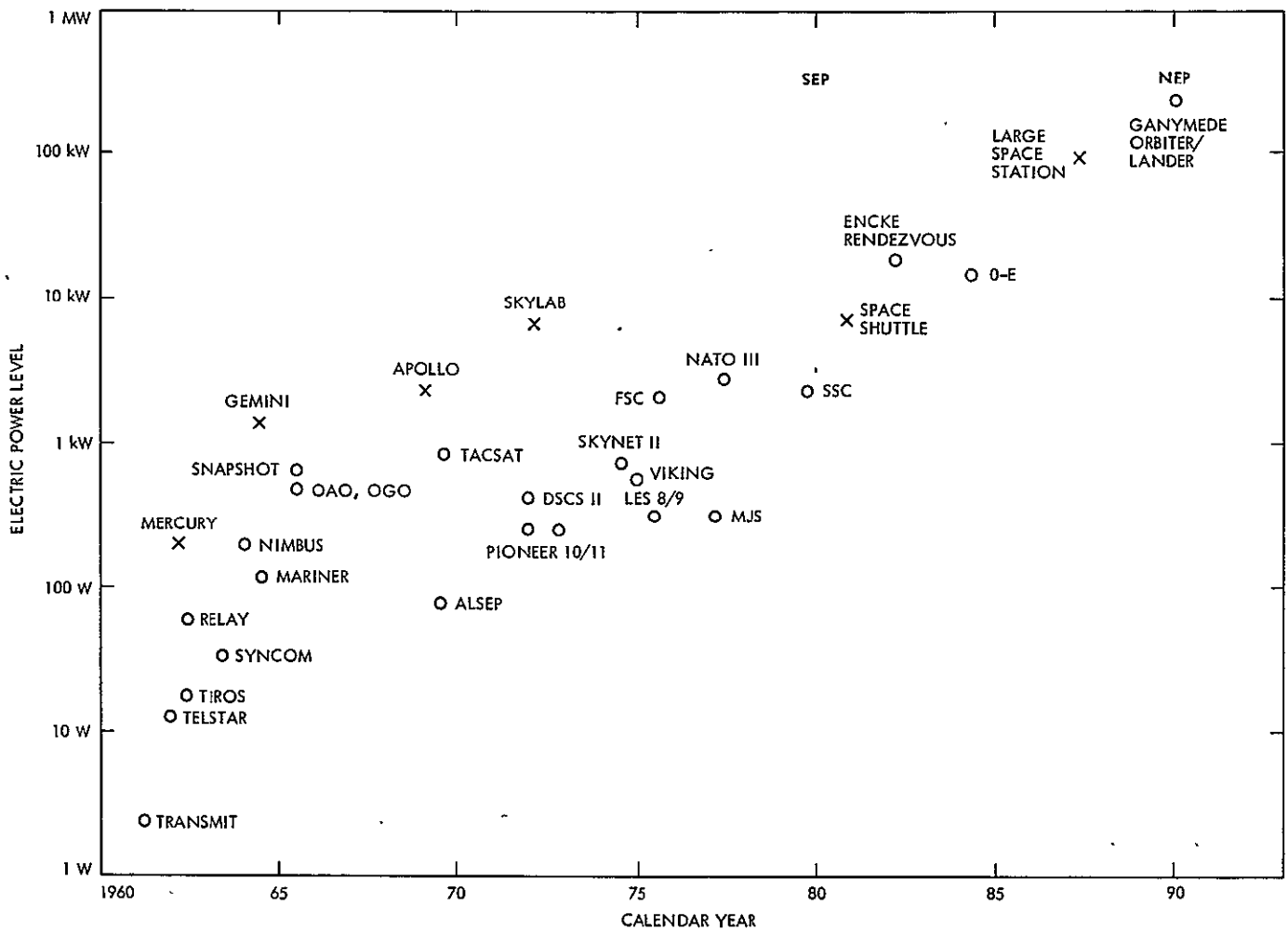

Fig. 1-2. Space power requirements, 1960-1990

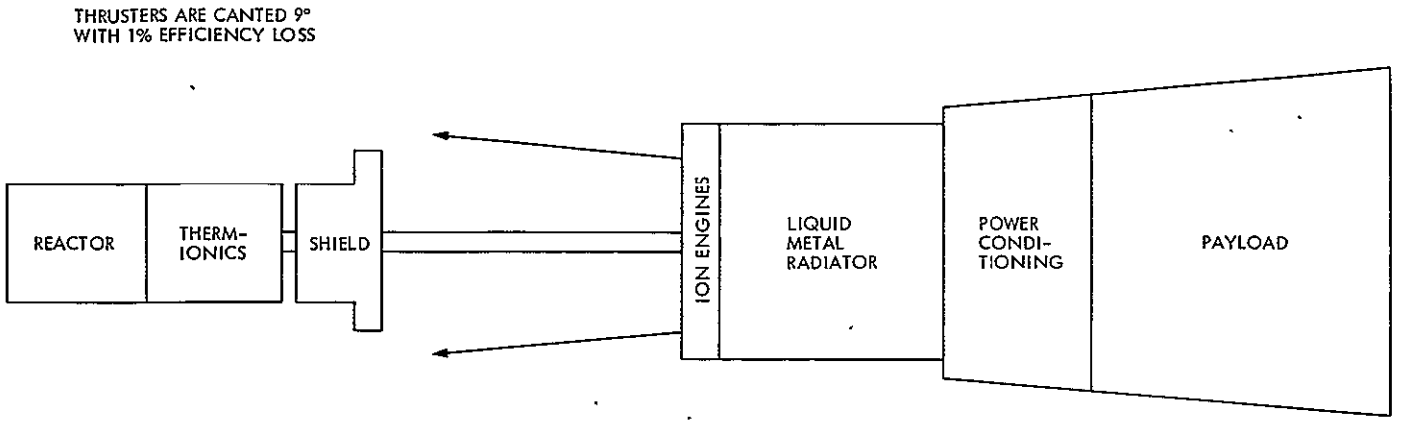

Fig. 1-3. Proposed nuclear electric propulsion end-thrust spacecraft configuration

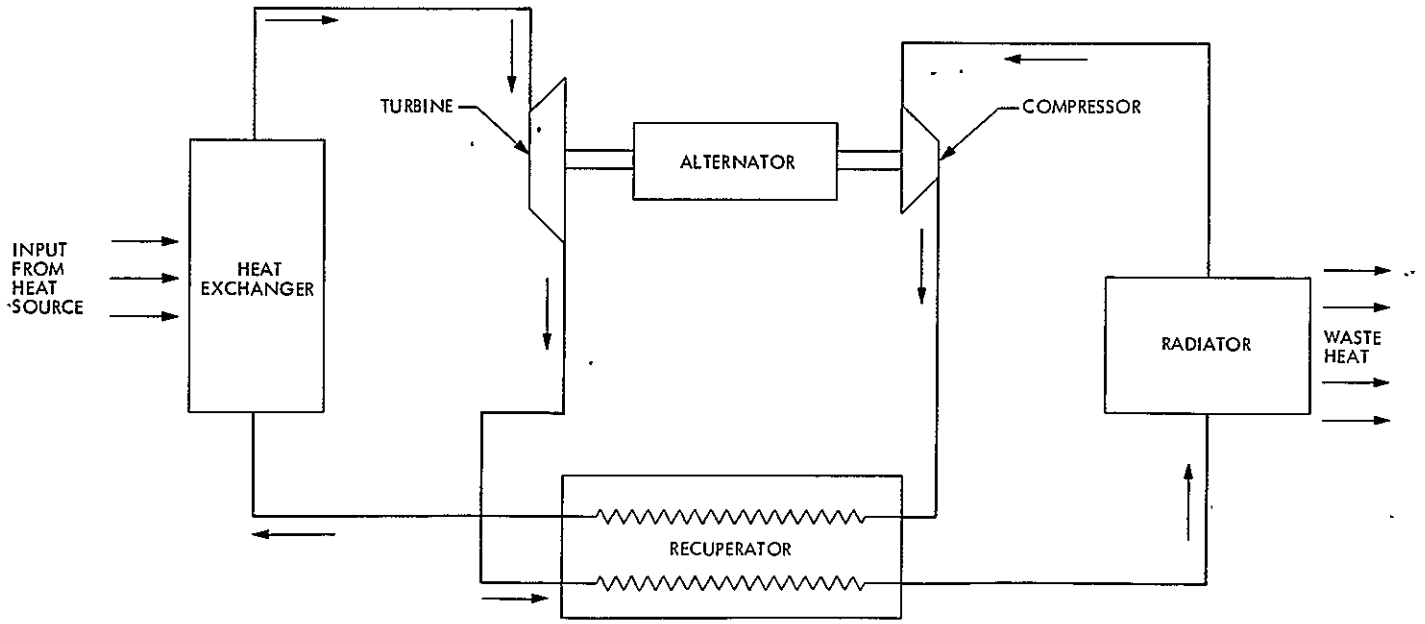

Fig. 1-4. Closed Brayton cycle

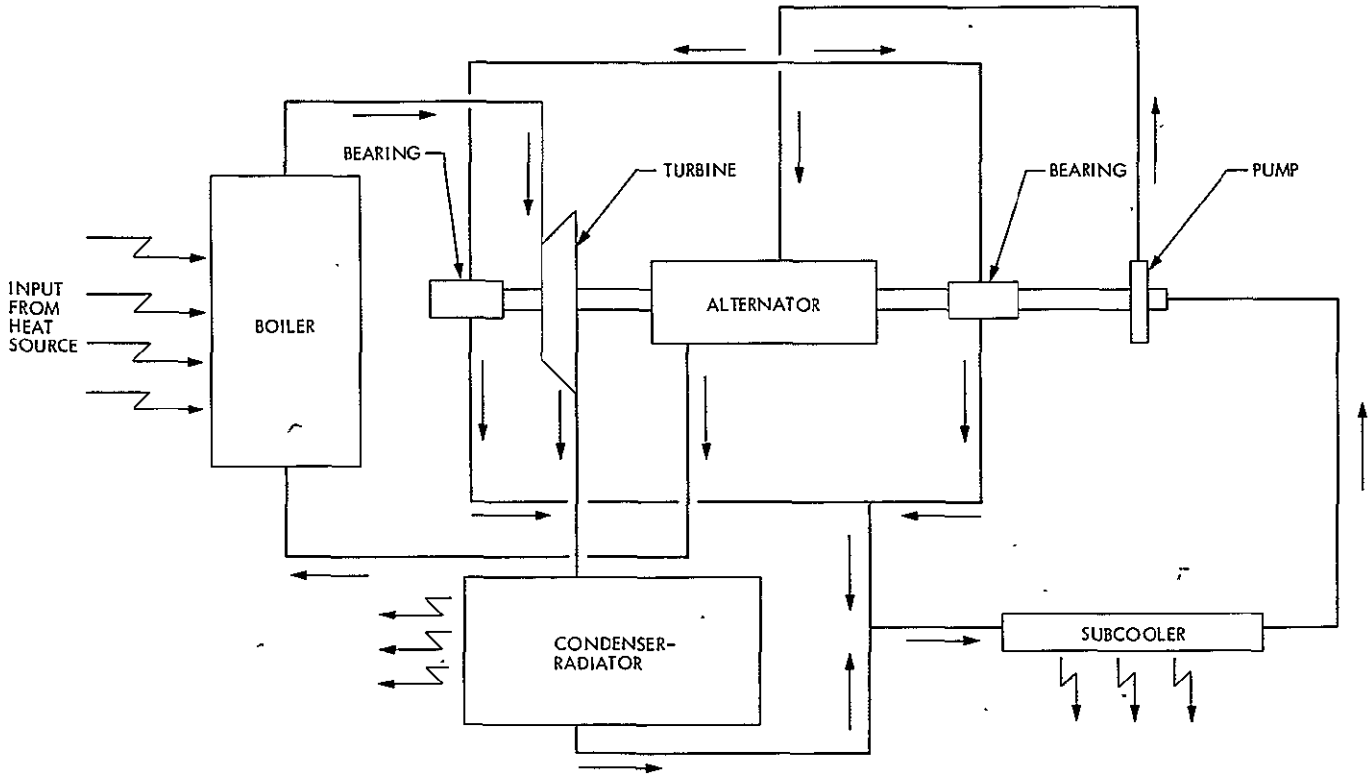

Fig. 1-5. Closed Rankine cycle

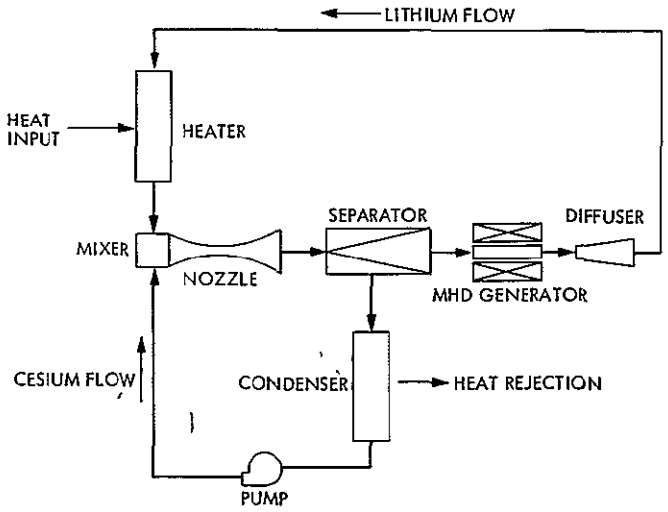

Fig. 1-6. Liquid metal magnetohydrodynamic cycle

ORIGINAL PAGE IS
OF POOR QUALITY

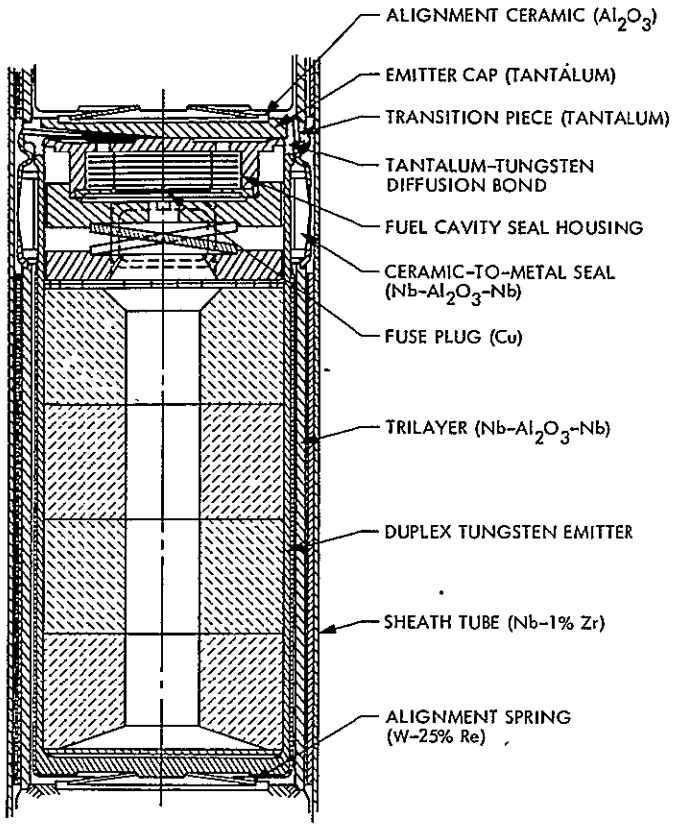

Fig. 1-7. Thermionic cell, internally fueled

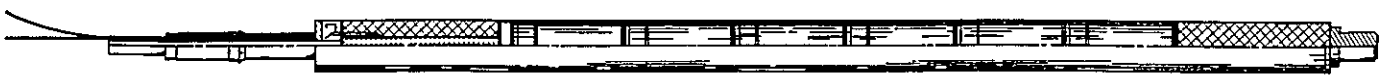

Fig. 1-8. TFE assembly for electric propulsion reactor

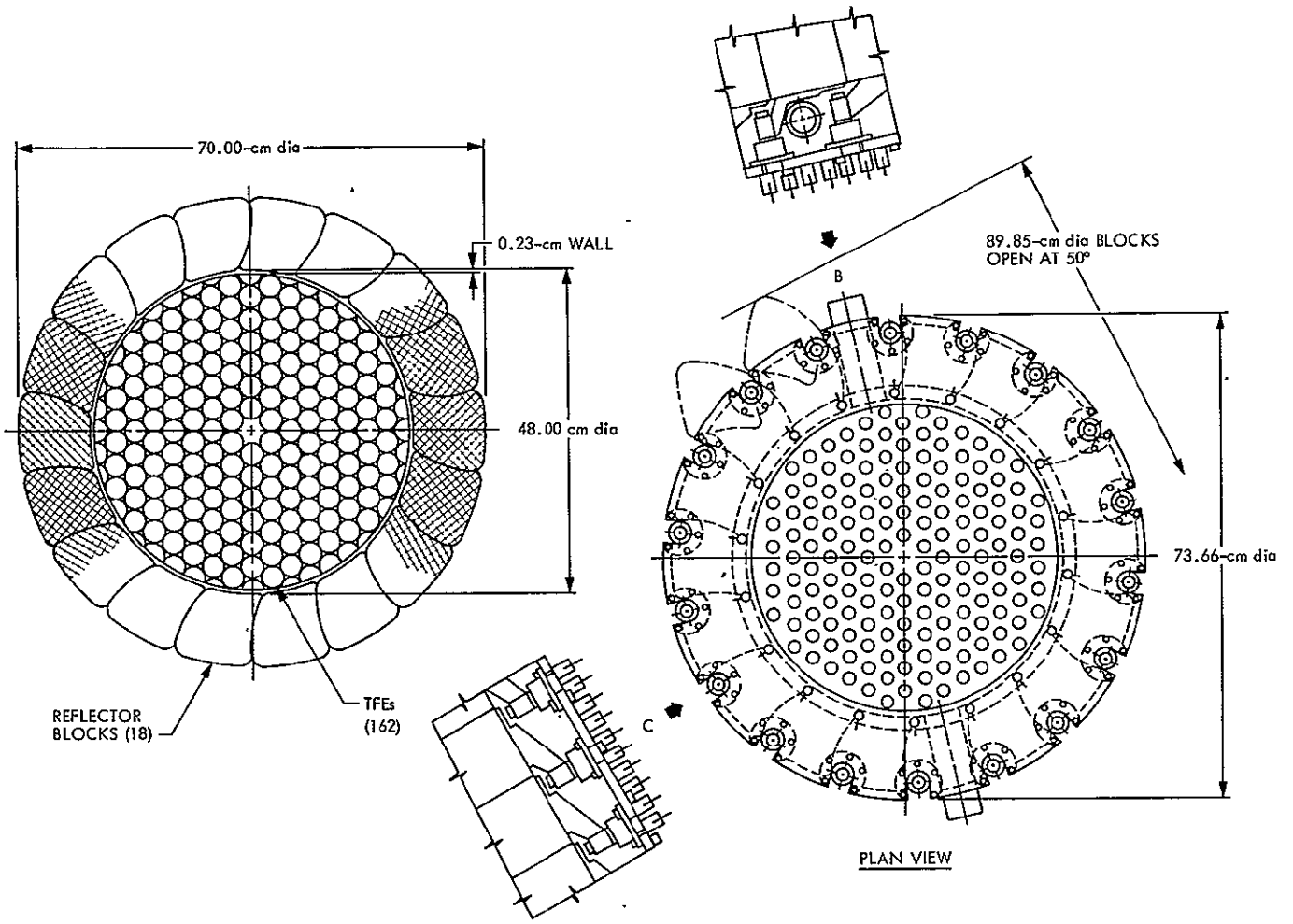

Fig. 1-9. Thermionic reactor assembly

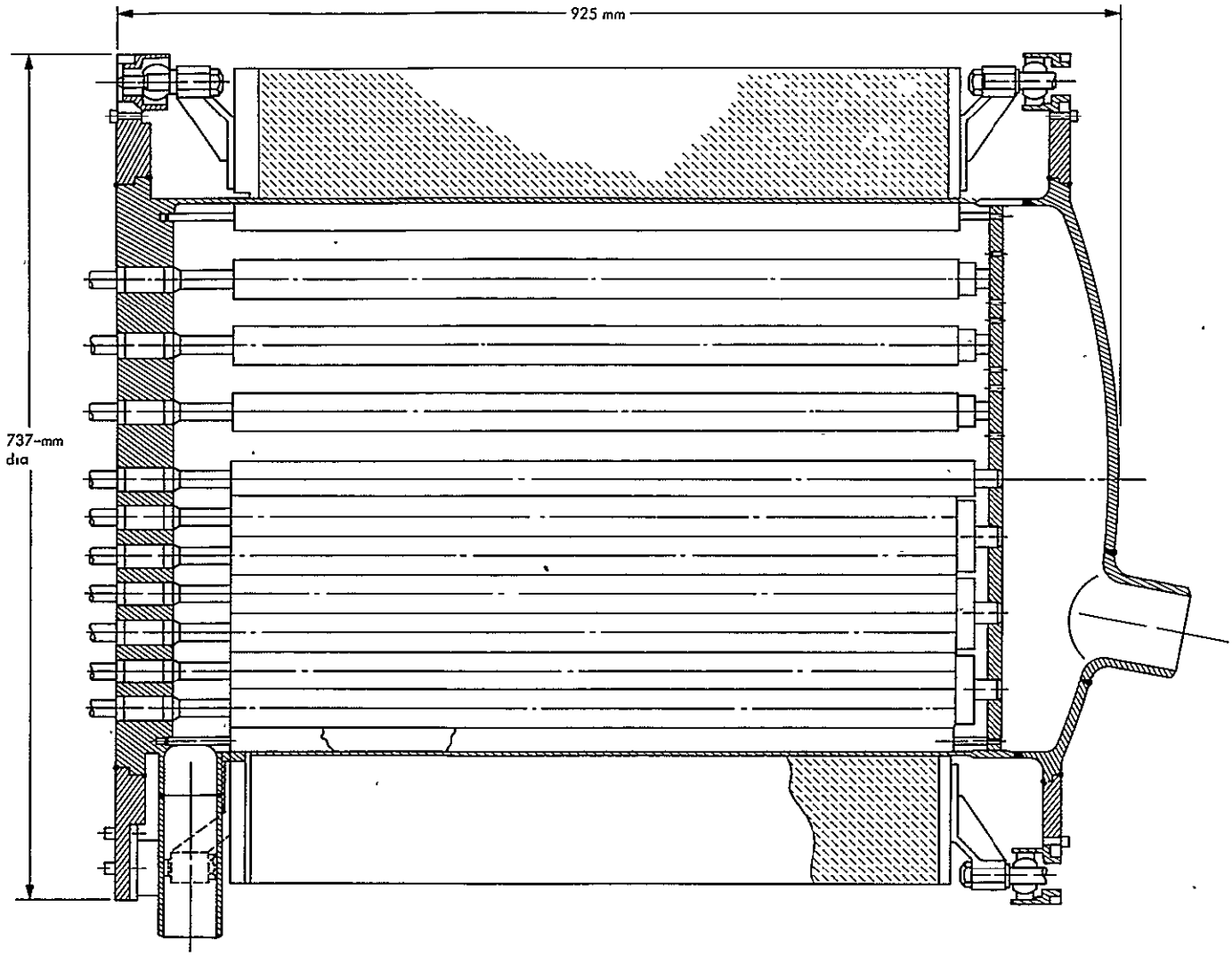

Fig. 1-10. Thermionic reactor assembly, elevation view

PART 2. NUCLEAR SYSTEMS ANALYSIS

D. R. Koenig
Los Alamos Scientific Laboratory

PRECEDING PAGE BLANK NOT FILMED

I. INTRODUCTION

NASA is currently looking at potential nuclear space power concepts for electrical propulsion of deep space missions. LASL has a wide expertise in the field of nuclear space power and is contributing to this effort in the areas listed as follows:

(1) Participate in selection of design options for NASA thermionic systems program.

(2) Assess the feasibility of applicable reactor concepts.

(3) Provide design parameters for selected reactor systems.

(4) Identify technological problem areas.

To date we have performed a brief survey of the major design options available for a nuclear thermionic system. We have initiated heat transfer and neutronic studies aimed at obtaining the reactor design characteristics described as follows:

(1) Reactor size and weight.

(2) Material selection.

(3) Fuel configuration.

(4) Heat transfer characteristics.

(5) Neutronic performance.

(6) Controls.

(7) Shielding requirements.

We have concentrated our attention on a heat-pipe-cooled reactor with out-of-core thermionic conversion because we believe that such a system, if feasible, has unique advantages for space power systems.

II. DESIGN OPTIONS FOR NUCLEAR THERMIONIC SYSTEMS

A list of some of the major design options available to nuclear thermionic systems is described in Table 2-1. As a starting point in our evaluation of potential reactor thermionic systems, we chose to concentrate initially on a system defined by the underlined items in Table 2-1. Some of the

chosen design options were selected arbitrarily; others were selected on the basis of technical judgment. We plan to study this particular system in sufficient detail to obtain a reasonable range of operating parameters and also identify technological problem areas. Possible alternative design options will be investigated subsequently. We hope by this methodology to obtain sufficient information to form the basis for a rational selection of a viable nuclear thermionic space power system.

Currently we intend to concentrate on out-of-core thermionics. So much effort has gone into the previous contracted General Atomic in-core thermionic system that for the present it will be considered the reference design against which out-of-core systems are compared.

Because of the uncertainties in projected thermionic converter improvements we are considering two distinct emitter temperature regimes – 1800 and 1400 K. Table 2-2 lists the major reactor design differences expected for the two temperature regimes. Our choice of uranium carbide fuel was motivated primarily by the existing expertise at LASL with the carbides and the extensive work at General Atomics which have led to a rather good understanding of the metallurgy of this fuel. In comparison to the carbide, UO_2 has poor thermal conductivity, poor dimensional stability under radiation and thermal cycling, and a high vapor pressure. The nitride does not appear to be a good choice. It dissociates appreciably, even as it appears at the low temperature regime, leading to the formation of free U metal in the fuel unless an overpressure of N_2 is maintained in the reactor. But this requirement would necessitate a pressurized containment vessel around the reactor. A mixture of UN and UC has a much reduced removal rate of N_2 in a vacuum environment, and perhaps this fuel deserves further investigation. For simplicity, we are first considering the fuel elements in a parallel configuration, though realizing that possible restrictions on the minimum spacing of heat pipes emerging from the reactor may dictate a transverse (crossed) arrangement of fuel elements. Stacking arrangements for one of many possible heat pipe/fuel element configurations are shown in Fig. 2-1.

Heat pipe cooling was selected because it offers several advantages to space reactor systems. No moving pump machinery is required. A heat pipe is closed at both ends and does not require an external return path;

consequently, plumbing is greatly simplified and is also lighter. Neutron activation of a large quantity of coolant fluid is eliminated. Heat pipe cooling offers protection against single point failure since the heat pipes can be easily arranged such that each fuel element is cooled by several heat pipes. Thus, if one heat pipe fails, its heat-transfer load is assumed by its neighbors.

Startup problems occasionally encountered with heat pipes are not expected to occur in the thermionic application. Such difficulties (drying out of the evaporator section by freezing the vapor in the condenser section) may arise when the cooling load at the condenser section is very large. This is not expected to be the case with thermionic diodes, which transfer heat very poorly until the operating emitter temperature is nearly obtained.

Of the many techniques available for coupling the heat transfer from the fuel elements to the cooling tubes we chose to consider a helium gap and direct brazing of fuel element to cooling tube. Helium coupling offers simplicity of design and core assembly. The penalties are significant temperature drop across the gap and the requirement for a gas-tight containment vessel around the reactor. Brazing, if technically feasible, provides excellent heat transfer and eliminates the need for a containment vessel. We envision a scheme whereby several heat pipes would be brazed to one fuel element, which might be composed of several short segments so as to avoid severe thermal shear stresses across the braze.

For this initial system study it was assumed that thermionic converters would be attached directly to each reactor heat pipe through an electrical insulator and that heat would be extracted from the converter collectors via a liquid-metal heat exchanger to a heat pipe radiator. In such a scheme it may be possible, if desired, to electrically isolate the fuel elements from each other and allow the possibility of placing the diode emitters in direct contact with the heat pipes.

III. PARAMETRIC HEAT TRANSFER STUDY

Heat transfer calculations have been performed in a systematic way for heat-pipe-cooled reactors of different sizes operating at several power levels. The purpose of the calculations is to define a practical range for

the number and size of heat pipes as a function of reactor size, void fraction, power level, and operating temperature. Initial results of this heat transfer study are summarized in Figs. 2-2 through 2-7. The results displayed in these figures are intended to indicate trends rather than accurate design specifications. Each figure describes a set of calculations for a reactor of a fixed size, power level, and heat pipe operating temperature. Each figure is a map of core void fraction vs heat pipe outer diameter, on which are plotted constant contour lines for heat pipe number, temperature difference across the thickness of fuel elements, and heat pipe performance as described by the fraction of sonic velocity at which the vapor (Na or Li) in the heat pipes is operating.

A practical design for each map is bounded by the following restrictions: The void fraction has an upper limit imposed by criticality (neutronic) considerations and a lower limit set by heat pipe performance. Nominal heat-pipe performance was conservatively assumed to be that occurring at vapor velocities less than 10% of the sonic limit. The right side of the map will be bounded either by the maximum tolerable fuel ΔT determined from thermal stress considerations, or by a power conversion requirement for a minimum number of heat pipes. Finally, the left side of the map will be restricted by the need to keep the number of heat pipes below some reasonable value. Comparison of Figs. 2-2, 2-3, and 2-4 shows the effect of varying the core size while maintaining the power constant, and Figs. 2-3, 2-5, and 2-6 display the effect of varying the power level for a reactor of fixed dimensions. Figure 2-7 was calculated for Li vapor heat pipes operating at 1800 K. The calculations were performed assuming a fuel thermal conductivity of about 30 W/m-K. The fuel ΔT and heat pipe velocities were computed for an assumed peak-to-average power ratio of 1.4. The sharp rise in the vapor velocity contours at small heat pipe diameters is artificial and results from the particular heat pipe model used in this study. Small heat pipes can be designed that would not display such a dramatic effect. Detailed thermal stress calculations have not been performed, but indications are that for UC-ZrC the fuel ΔT limit may be 50-100 K. This limit will be design-dependent to some degree, and it will depend also on the desired redundancy for cooling the reactor, namely on the selected number of heat pipes per fuel element.

IV. REACTOR CRITICALITY

Neutronic calculations have been initiated to determine the limiting void fraction for selected core size. Preliminary results indicate that a tungsten heat pipe reactor having a cylindrical core 0.2 m high and 0.2 m in diameter, reflected on all sides with 10 cm of BeO and fueled with 90% UC-10% ZrC, would be critical at a void fraction (actually the non-fuel volume fraction) of about 0.3. Applying these preliminary results to Fig. 2-2 as an example indicates a design region in the neighborhood of the point defined by a void fraction of 0.3 and a heat pipe diameter of 0.75 cm, implying about 200 heat pipes.

A reactor of this size and fuel loading would not be burn-up limited at 1 MW^{th} for 20,000 hours. Consequently, it appears that a smaller reactor could be made critical at a smaller void fraction. But it will be increasingly difficult if not impossible to transfer heat out of the reactor with heat pipes, as the available design region shrinks between a decreasing void fraction and a rising sonic limit contour and suffers the complexity of an increasing number of heat pipes.

V. CONCLUSIONS

This work indicates that a 1-2 MW^{th} heat-pipe-cooled reactor for space power is conceptually feasible with a 0.3 × 0.3 m (or possibly smaller) cylindrical core requiring in the neighborhood of 200 heat pipes. Such a reactor fueled with 90% UC-10% ZrC and reflected with 0.1 m of BeO would weigh on the order of 450-500 kg.

A heat-pipe-cooled reactor with out-of-core electrical conversion offers definite advantages for space power in the areas of size, weight, redundancy to eliminate single point failure, versatility, and reliability.

Recommendations for continuing this study are listed as follows:

(1) Provide broad design parameters for out-of-core thermionics reactor system:

   (a) Core: cylindrical, approximately 0.45 × 0.45 m.

   (b) Fuel: (U, Zr)C.

(c) Cooling: heat pipe (tungsten at 1800 K, molybdenum at 1600 K, niobium at 1400 K).

(2) Evaluate material capabilities.

(3) Assess feasibility of brazed fuel/heat pipe configurations.

(4) Evaluate heat pipe performance at 1500 and 1800 K.

In particular, neutronic calculations are needed to establish the relation between void fraction and core size at criticality. Heat transfer calculations should be refined to investigate various heat pipe/fuel element configurations. Materials data are needed especially in the areas of stress limitations and compatibility between fuel and heat pipes, including brazing technology. Finally, such a space nuclear power concept cannot be pursued without acquiring a substantial technological base in heat pipe operation in the temperature regime of 1500-1900 K.

Table 2-1. Design options for nuclear thermionic systems

Thermionic converters		Nuclear Reactor				Intermediate liquid metal heat exchanger	Radiator
Location	Emitter temperature	Fuel	Fuel element configuration	Heat transfer coupling	Cooling		
In core	1800 K	Carbide	Parallel	Helium	Liquid metal	Yes	Heat pipes
Out of core	1400 K	Oxide	Transverse	Liquid metal	Heat pipes	No	Liquid metal loop
		Nitride		Radiation			Direct
				Brazing			

Table 2-2. Emitter temperature considerations: Expected consequence of reducing emitter temperature from 1800 to 1400 K

Item	Effect
Reactor dimensions	None
Fuel material	None
Heat pipe	Change to Nb - (Na or Li)
Reflector and control material	More options
Reliability	Greatly increased

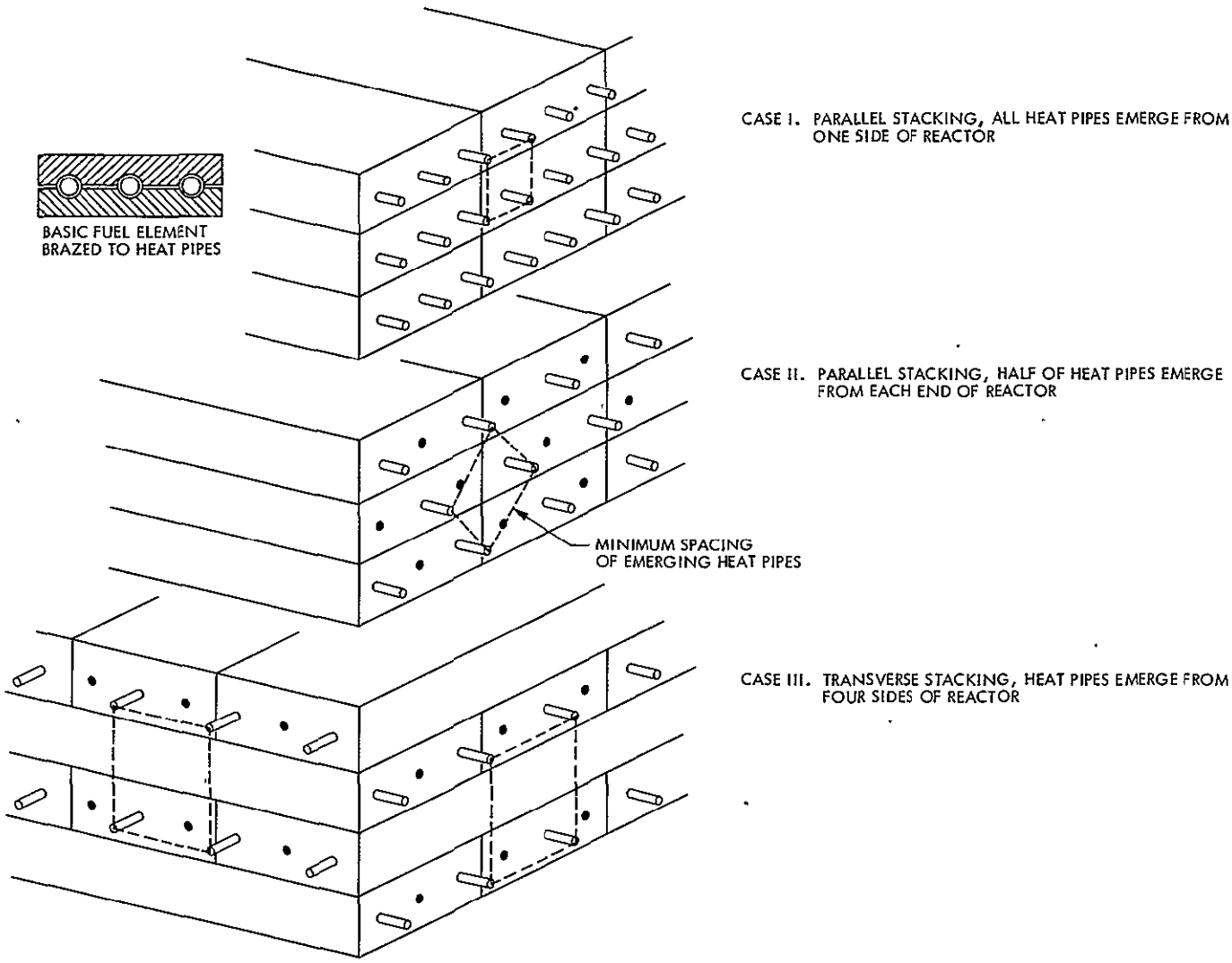

Fig. 2-1. Heat pipe fuel element arrangements

ORIGINAL PAGE IS
OF POOR QUALITY

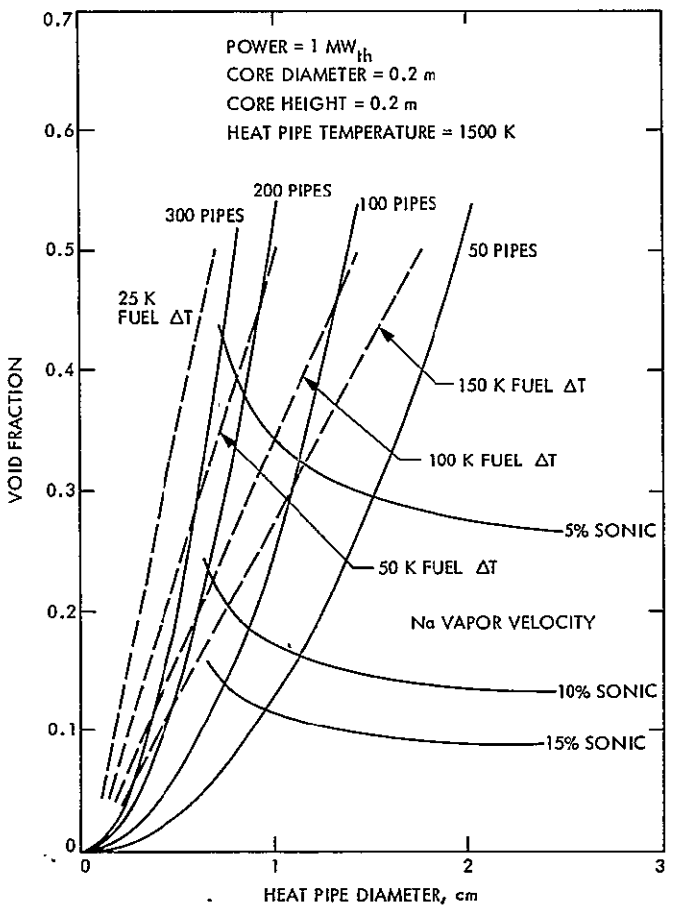

Fig. 2-2. Heat pipe parametric study: 1-MW thermal reactor core, 0.3 m diam x 0.3 m long

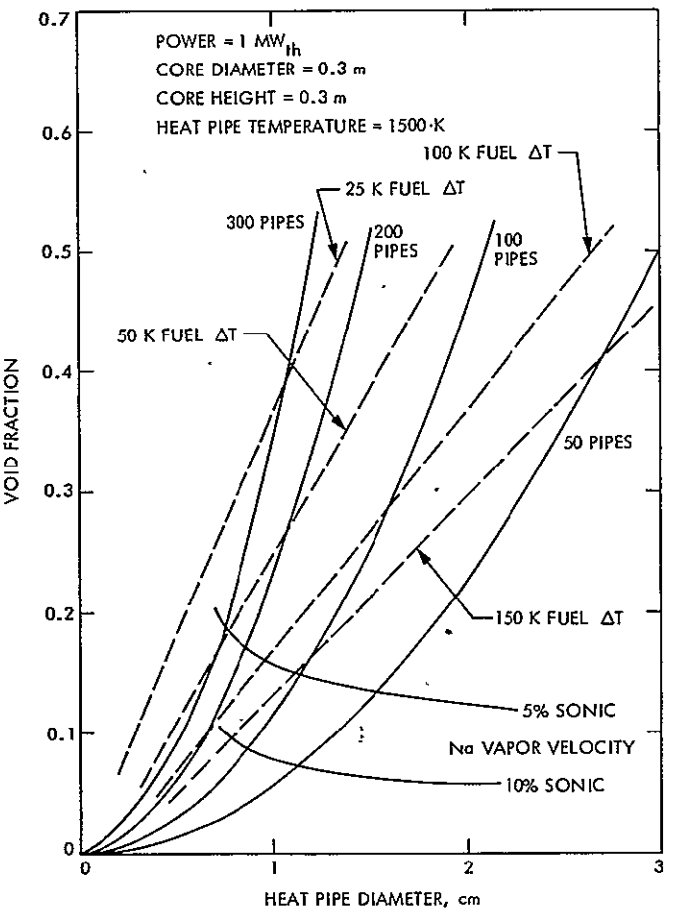

Fig. 2-3. Heat pipe parametric study: 1-MW thermal reactor core, 0.3 m diam x 0.3 m long

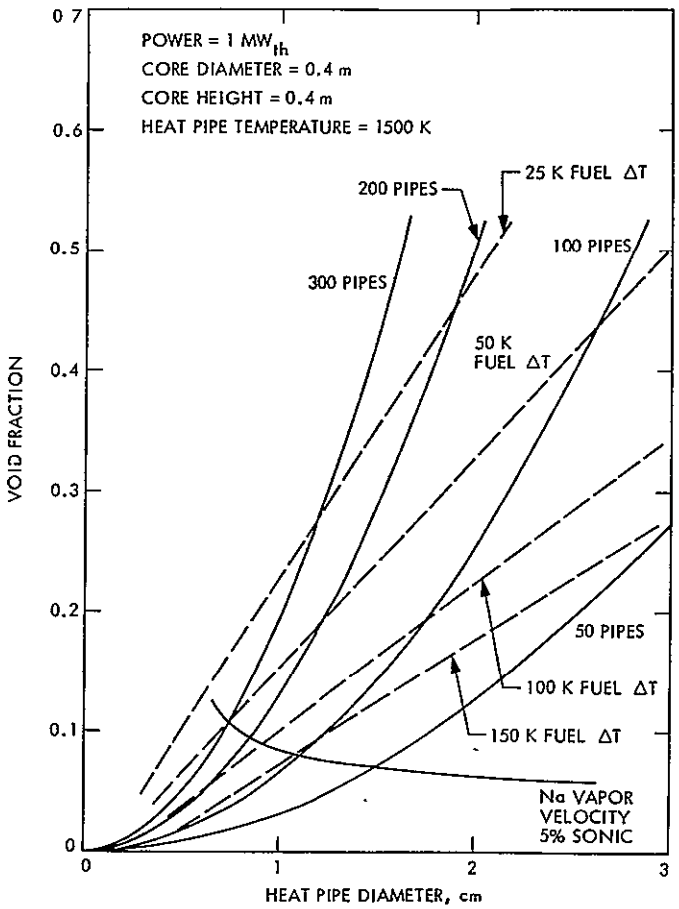

Fig. 2-4. Heat pipe parametric study: 1-MW thermal reactor core, 0.4 m diam x 0.4 m long

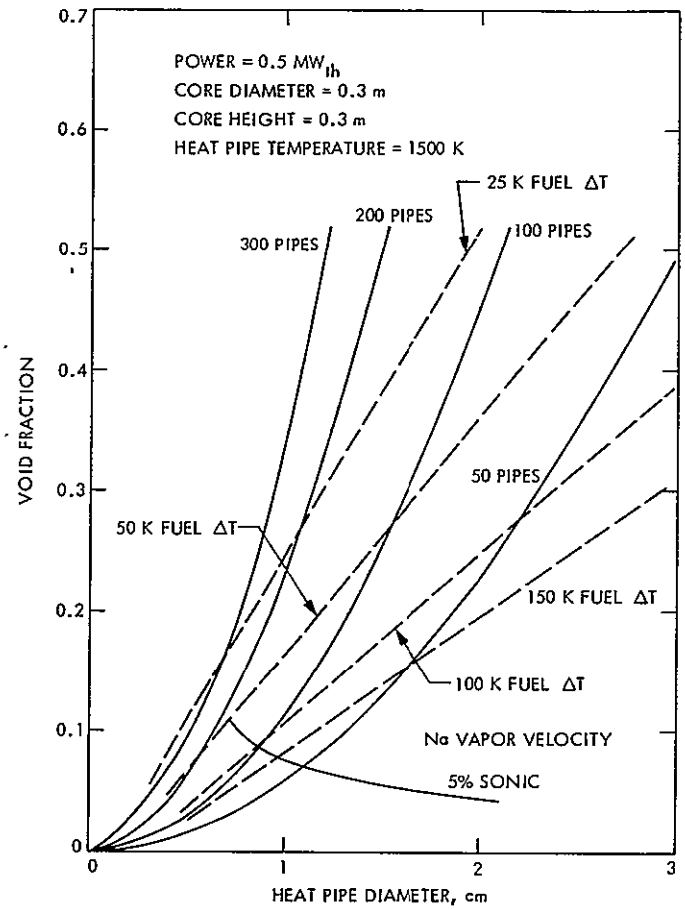

Fig. 2-5. Heat pipe parametric study: 0.5-MW thermal reactor core, 0.3 m diam x 0.3 m long

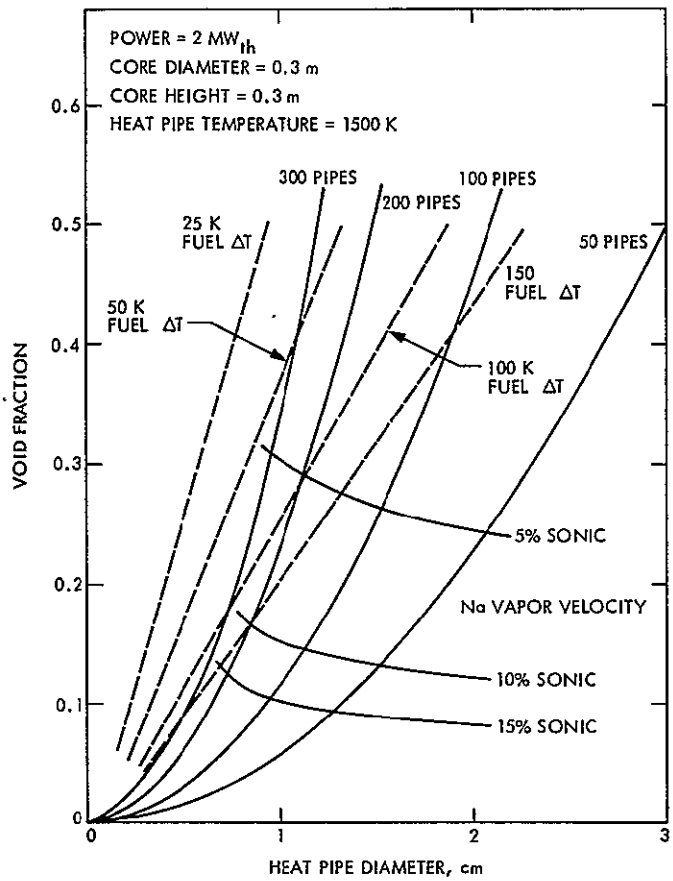

Fig. 2-6. Heat pipe parametric study: 2-MW thermal reactor core, 0.3 m diam x 0.3 m long

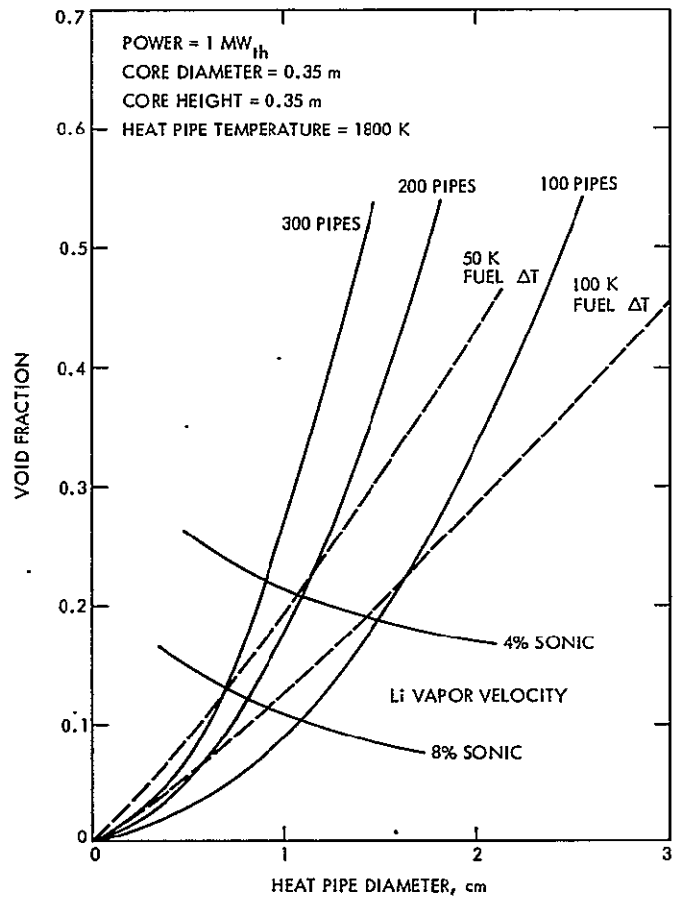

Fig. 2-7. Heat pipe parametric study: 1-MW thermal reactor core, 0.35 m diam x 0.35 m long

PRECEDING PAGE BLANK NOT FILMED

PART 3. SPACECRAFT SYSTEMS ANALYSIS

W. Z. Prickett
General Electric Company, Space Division

I. STUDY RESULTS

The objective of this study is the assessment of out-of-core thermionic powerplant integration with previously identified nuclear electric propulsion (NEP) stage concepts. The assessment was accomplished by comparison with previously studied in-core thermionic powerplants in the following specific combinations:

(1) High-temperature thermionic technology, 240-kWe net thruster power, end-thrust configuration.

(2) High-temperature thermionic technology, 120-kWe net thruster power, end-thrust configuration.

(3) High-temperature thermionic technology, 120-kWe net thruster power, side-thrust configuration.

(4) Low-temperature thermionic technology, 240-kWe net thruster power, end-thrust configuration.

The general conclusions of the assessment are:

(1) The out-of-core thermionic powerplant is compatible with both the end-thrust and the side-thrust spacecraft configurations.

(2) Launch configurations and integration with the shuttle are the same for both the out-of-core and the in-core thermionic powerplants.

(3) There is no major difference in propulsion subsystem specific weight between the out-of-core and in-core thermionic powerplants. The advantage calculated for the out-of-core powerplant may be partially due to the preliminary nature of its assumed characteristics rather than a real advantage.

(4) The propulsion system specific weight decreases, but not significantly, as the net thruster power is increased to 240 kWe in the out-of-core thermionic powerplant. However, a significant increase of 5000 kg in payload capability is obtained at the higher thruster power because of differences in earth escape mode. This potential payload advantage for a planetary mission may be traded for more important considerations, such as a wider range

PRECEDING PAGE BLANK NOT FILMED

of mission accomplishment, faster trip times, or increased local shielding which provides longer operational time in adverse radiation environments like that present near the planet Jupiter.

(5) There is no significant performance advantage in the use of low-temperature thermionic technology. However, it allows the use of developed, nonrefractory metal materials for the power-generating components of the powerplant.

(6) The propulsion subsystem specific weight penalty when the neutron shield is designed to the more restrictive requirement of 10^{12} nvt for neutron energies greater than 0.1 MeV is 0.5 kg/kWe. The penalty when the design is for a lifetime gamma dose of 10^5 rather than 10^6 rads is 4 kg/kWe.

(7) A 42-day residence time of the thermionic powerplant in lower Jupiter orbit (same altitude as the moon Io) will impose a radiation dose from the planet's trapped proton radiation that is equivalent to the maximum neutron dose allowance of 10^{12} nvt. A small increase of 150 kg in primary shield weight would allow a residence time of approximately 20 days before allowable radiation doses were exceeded.

Figure 3-1 (from Ref. 3-1) presents the flight and launch configurations of a typical out-of-core thermionic NEP spacecraft. Differences in configuration and launch vehicle integration for other combinations of thruster power, thermionic technology, etc., are given later herein. The end thrust NEP stage is essentially conical in shape with the reactor-thermionic converter forming the apex of the cone at the rear of the stage and the net stage payload forming the base of the cone at the front end of the stage. A conceptual arrangement of out-of-core thermionic components is shown in Fig. 3-2. The reactor is located at the end of the support boom to minimize shielding and ion engine interactions. The thermionic converter is close-coupled to the reactor to minimize heat pipe length and to maximize the shielding effect of the converter. Electrical power is removed from the front face of the converter by low-voltage cables, which are routed around the outer surface of the neutron shield and propellant tank, and transmitted to the power conditioning modules located directly behind the net payload stage. Waste heat is removed from the thermionic converter by liquid metal coolant pumped

through ducts which are joined to the front end of the converter. The ducts are then routed to the main heat rejection radiator through the support boom. The conical-shaped neutron shield is placed as close as possible to the thermionic converter to minimize its weight. Similarly, the propellant tank is located directly in front of the neutron shield to maximize the thickness of the mercury propellant tank and, hence, its gamma shielding capability. If a permanent gamma shield of tungsten is required, it is placed between the neutron shield and propellant tank.

In forward sequence from the front end of the support boom are the thruster array, the main heat rejection radiator, the power conditioning radiator, and the net payload stage with extended antenna. The thruster array consists of 48 mercury electron bombardment ion engines (240-kWe arrangement) canted at 9 deg to the spacecraft axis. The off-center thrust pattern is accepted to reduce ion engine exhaust impingement on components to the rear of the array.

In the conical-shaped main heat rejection radiator, the liquid-metal coolant is piped through a series of circumferential headers operating in parallel. Short axial heat pipes remove the waste heat from the headers and reject it to space by surface radiation. The heat pipes are placed on the outer diameter of the headers, thus protecting the headers from meteoroid penetration.

The power conditioning section consists of individual PC modules distributed on the inner surface of a conical-shaped radiating surface. The overall dimensions and shape of the PC radiator is such that it can be inserted inside the main radiator in order to shorten the spacecraft for launch integration with the Shuttle, as shown by the central illustration of Fig. 3-1.

The net payload stage and antenna are at the front end of the spacecraft. At this location the payload experiments and communication equipment have an unrestricted view of space and a maximum separation from the injurious radiation and particulate environments of the reactor and thruster array, respectively. The net stage payload mass is limited by restrictions on the Shuttle cargo mass/center-of-gravity characteristics as shown by the top sketch of Fig. 3-1. For this particular case, any payload mass between 0 and 7000 kg produces a cargo center-of-gravity that is within acceptable

limits (shaded portion of the figure). However, the total spacecraft mass is less than the cargo launch capability of the Shuttle by 4600 kg. By judicious placement of ~3800 kg of ballast (or additional mercury propellant) at the rear of the cargo bay, the maximum net stage payload can be increased to 7780 kg, as shown by the top sketch of Fig. 3-1.

Tables 3-1 through 3-4 present comparative propulsion subsystem mass and payload mass characteristics for the in-core and out-of-core configurations of the different combinations evaluated. Other details of these evaluations are given later.

II. GUIDELINES AND CONSTRAINTS

Guidelines for the assessment of the effect of out-of-core thermionic powerplants on propulsion stage integration of an NEP spacecraft are listed as follows:

(1) Maximum use of previous work.

(2) Well-characterized NEP stage concepts.

- (a) End thrust.
- (b) Side thrust.
- (c) 120-kWe and 240-kWe designs cover power range of interest.

(3) Emphasis on NEP stage mass (kg/kWe), geometry, and shuttle integration.

(4) Little or no change in key subsystems.

- (a) Net stage.
  - Science.
  - Controls and communications.
- (b) Thrust subsystem.
  - Power conditioning.
  - Thruster array.

(5) Shuttle and Centaur (kick stage) characteristics updated.

Previous work, performed under JPL Contract 953104 with end-thrust and side-thrust stage configurations using in-core thermionic systems at power levels of 120 kWe and 240 kWe, is used both as a starting point and a basis for comparison for the out-of-core thermionic systems evaluations. NEP stage subsystems external to the power subsystem, such as the thrust subsystem and the net stage subsystem, are kept the same as in the previous work if at all possible. Shuttle launch vehicle characteristics and Centaur kick-stage characteristics are updated to reflect expected performance changes in recent modifications of these components. And the parameters of primary interest in evaluating the effects of using out-of-core thermionic components are identified as the NEP propulsion system specific mass, geometry changes in the NEP spacecraft, and the required launch configuration of the NEP spacecraft to meet the cargo space and center-of-gravity constraints of the Shuttle.

A. MISSION CONSTRAINTS

Outer planet mission requirements are used as the primary mission constraint. Power subsystem operation of 20,000 hours at full power is required with corresponding mercury propellant inventories of 5500 kg at 120 kWe and 11,000 kg at 240 kWe. A Centaur D-1T chemical stage is used to inject the 120-kWe system into an earth-escape trajectory, while the escape mode for the 240-kWe system is a spiral trajectory using nuclear electric propulsion.

As in the previous work, a 50,000-hour-lifetime requirement is imposed on NEP components and the avionics subsystem components. This is consistent with geosynchronous earth-orbit mission requirements, thus maintaining a dual-mission capability for the out-of-core thermionic NEP spacecraft.

B. SHIELDING CONSTRAINTS

The spacecraft shields are designed to limit the electronic component lifetime gamma doses to 10^6 rads and lifetime doses of 10^{12} nvt from neutrons with energies greater than 1.0 MeV. Additional estimates are made of the shield weight penalties incurred when designing to the more restrictive requirements of 10^5 rads gamma and 10^{12} nvt from neutrons with energies greater than 0.1 MeV.

In previous work, the thickness of the power conditioning radiator surface was increased to shield the PC modules from Van Allen belt radiation during the spiral transfers to and from geosynchronous orbit. This requirement is maintained for the 240-kWe out-of-core thermionic NEP stage which will use the spiral earth-escape mode.

Estimates are made of shield weight penalties for missions which terminate in the trapped radiation fields around the planet Jupiter. The weight penalties are additions to the primary spacecraft shields and are a function of the time in Jovian orbit.

C. THERMIONIC INTEGRATION CONSTRAINTS

Reactor heat is transported to the thermionic elements via a large number of self-contained lithium heat pipes operating in parallel configuration. The waste heat from the thermionic elements is transported to the space radiator by a pumped liquid metal loop.

D. THERMIONIC TECHNOLOGY CONSTRAINTS

The thermionic technology is separated into two distinct categories; high-temperature technology and low-temperature technology. The high-temperature thermionic systems have emitters operating at 1800 K, collectors operating at 1050 K, and a beginning-of-life system efficiency of 10.6%. The thermionic diodes are connected in series-parallel arrangement to obtain an overall system output voltage of 22 Vdc. These values of temperature and efficiency are taken from the previous work and are assumed to apply to both the baseline in-core configuration, used as a basis of comparison, and the out-of-core configuration. JPL specified the tungsten material composition of the heat pipes transporting the reactor heat to the high-temperature emitter in the out-of-core configuration.

All of the low-temperature thermionic characteristics are specified by JPL and are assumed to apply to both in-core and out-of-core thermionic configurations. The low-temperature thermionic element emitter operates at 1400 K, thus allowing the use of niobium material for the heat pipes in the out-of-core configuration. When the thermionic element collector is operated at 800 K, the thermionic system efficiency is 29%. When the collector

is operated at 850 K, the corresponding system efficiency is 25%. The output voltage of the low-temperature systems is 22 Vdc, the same as the high-temperature systems.

E. OUT-OF-CORE THERMIONIC POWER SYSTEM CONSTRAINTS

The mass and dimensional assumptions for the nuclear reactor and the thermionic converter of the out-of-core power system configuration are presented in Fig. 3-3. Reactor characteristics are specified by LASL; thermionic converter assumptions are a combination of JPL specifications and GE calculations.

III. HIGH-TEMPERATURE REACTOR DESIGNS

A. END THRUST, 240-kWe CONFIGURATION

1. Baseline In-Core Design

The baseline, in-core, 240-kWe system using two 120-kWe reactors in tandem and shown in Fig. 3-4 was taken from previously reported work (Ref. 3-2). The only modification made to the original design is a larger propellant tank to accommodate the 11,000 kg of propellant assumed for the present study. The propulsion system mass is increased by the larger propellant tank. The mass breakdown is shown in Table 3-5. Estimates of the radiation dose at the power conditioning, using NASA-Lewis data, are 10^{12} nvt ($E_N \geq 1.0$ MeV) and 10^6 rads. The specific mass of the propulsion system is 37.6 kg/kWe. A later analysis based on a single 240-kWe reactor showed a specific mass of 27.5 kg/kWe (see Table 3-6).

2. Out-of-Core System Definition and Assumptions

The out-of-core reactor and the thermionic assembly characteristics were provided by JPL. Figure 3-5 shows the preliminary dimensions used. A later recommendation by JPL proposes that minimum separation feasible for assembly be used between the reactor and the thermionic converter and heat exchanger (TCHE). The baseline estimate for the length and diameter of the reactor is 0.6 meters, but these dimensions were assumed to vary between 0.4 and 0.8 meters in a parametric evaluation. The mass of the

reactor assembly (reactor plus heat pipe plus TCHE) is shown in Table 3-7 as a function of reactor diameter. The centers of gravity for each of the individual components were assumed to be at their axial midpoints.

The key differences between the spacecraft designs based on out-of-core thermionic systems are:

(1) The mass and dimensions of the reactor assembly.

(2) The mass and location of the neutron shield and permanent gamma shield.

(3) The separation distance between the reactor midplane and power conditioning dose plane.

(4) The axial location of axial thickness of the propellant tank which acts as the primary gamma shield.

All other components were assumed to be constant in mass and physical location in the spacecraft.

3. Out-of-Core Thermionic Power Subsystem Integration Approach

The integration of the thermionic out-of-core reactor assembly with the spacecraft is shown on Fig. 3-6. The distance between the ion engine thruster plane and the rear face of the reactor was kept constant at 8.1 m, the same distance as for the thermionic in-core system. Thus, all dimensions forward of the thruster plane are the same as shown in Fig. 3-4 for the in-core system. The conceptual telescoping of the spacecraft for installation within the shuttle cargo bay is also the same as shown by Package Concept B in Fig. 3-4 (Ref. 3-2).

The shield shadow angle is formed by the fixed edge of the thruster plane and the (potentially variable) diameter of the reactor rear face. The axial location of the shields and propellant tank, as well as the separation distance between the reactor midplane and power conditioning (PC) module dose plane, is a function of the reactor length. The dimensions of the propellant tank normal to the spacecraft axis (thickness) are determined by the fixed volume of the propellant, the shield shadow angle, and the axial location of the tank. Similar dimensions for the neutron and permanent gamma shields are determined by the radiation dose criteria, the shadow angle, and respective axial locations of these shields.

4. Shielding Requirements

Estimates of nuclear radiation doses and corresponding thicknesses of radiation shields are based on 1972 NASA-Lewis calculations (Ref. 3-3). The original calculations for reactor radiation dose rates were based on a particular spacecraft configuration, reactor power level, and reactor-midplane-to-power-conditioning-dose-plane separation distance. Curves were provided to show the effect of original propellant inventory (tank thickness) on both neutron and gamma dose rates. In addition, separate neutron dose rate curves were provided for two neutron energies, i.e., E greater than 0.1 MeV and 1.0 MeV, and for various lithium hydride neutron shield thicknesses.

Figure 3-7 presents the calculated neutron shield masses for variable reactor assembly diameters and lengths. The solid lines correspond to doses of 10^{12} nvt from neutron energies greater than 1 MeV. Equivalent conditions for in-core thermionic reactor system are also presented.

Permanent gamma shielding requirements as a function of reactor assembly dimensions are presented in Fig. 3-8. The solid lines correspond to a lifetime dose requirement of 10^6 rads; the dashed lines correspond to a 10^5 rad requirement. For reactor diameters of up to 40 cm, the propellant tank (mercury) was sufficiently thick to limit the gamma dose below the 10^6 requirement without additional permanent gamma shielding (e.g., tungsten).

The baseline in-core system was provided with "thick" skin power conditioning radiators to provide for Van Allen belt radiation protection during its projected earth orbital transfer mission. Therefore, no additional photon shielding is necessary.

NASA-Lewis data was also used to estimate the effect of trapped radiation in the vicinity of the planet Jupiter on the NEP and net spacecraft shielding requirements. The net spacecraft shielding can be achieved in either of two ways: additions to the primary reactor shield or localized shielding. The weight additions to the primary reactor shield could be estimated by use of the NASA-Lewis data, but the localized shielding estimates would require detailed calculations of a length and complexity inconsistent with the limited objectives of this study.

Figure 3-9 shows the nuclear radiation doses experienced by a spacecraft in spiraling in to an orbit of 5.9 R_J and holding at that orbit for a

variable residence time. The radiation doses due to trapped electrons and protons are presented in equivalent nvt and rads as a function of time at 5.9 R_J. As shown, the equivalent nvt dose is the more severe, since the allowable dose of 10^{12} nvt would be absorbed in approximately 42 days of Jovian orbit time, while the allowable gamma dose of 10^6 rads would not be absorbed until approximately 1000 days of orbit time. The additional thickness of lithium hydride and tungsten needed to limit the PC lifetime doses to 10^{12} nvt and 10^6 rads for a given Jupiter orbit time is given in Fig. 3-10. As the orbit time approaches the limiting value of 42 days, the LiH thickness increases exponentially to 20 cm, while the tungsten thickness increase is only 0.66 cm. The total mass addition for the high-temperature, 240-kWe, out-of-core thermionic system having a reactor length and diameter equal to 60 cm is shown in Fig. 3-11.

5. Out-of-Core Thermionic NEP Shuttle-Mass Integration

A listing of the propulsion system component masses for the out-of-core system is presented in Table 3-8. The total mass of 6854 kg and specific mass of 28.6 kg/kWe are much lower than corresponding values previously established for the baseline in-core thermionic NEP systems. This is primarily due to the much lighter reactor/thermionic assembly mass currently projected for the out-of-core systems.

The integration of the 240-kWe spacecraft configuration into the Shuttle and the Shuttle CG constraints on spacecraft payload are illustrated in Fig. 3-12. The dashed line indicates that the baseline in-core configuration can have a spacecraft payload between 0-6900 kg and meet the projected total liftoff capability and CG constraints of the Shuttle. The lower band shows that the out-of-core NEP system configuration has the same spacecraft payload capability of 0-7000 kg. The band covers the parametric range of reactor diameter and length considered in this study. Two additional curves are presented, corresponding to assumed masses of 2000 and 3000 kg for the out-of-core thermionic reactor assembly. The 2000-kg reactor configuration could have a slightly higher spacecraft payload capability of 7200 kg and still meet the Shuttle CG constraints, while the 3000-kg reactor configuration could have a maximum payload of 7500 kg. These payload capabilities greatly exceed the identified planetary mission payload requirement, which is approximately 120 kg. Thus the excess payload capability may be exchanged

for some other desirable characteristic such as faster trip time, additional local shielding to allow longer operation in Jovian orbit, wider range of mission application, etc.

B. END-THRUST, 120-kWe CONFIGURATION

This section describes preliminary designs and weights for an end-thrust NEP spacecraft delivering 120 kWe to the thrust subsystem. The weights are presented for interplanetary missions, even though the basic NEP stage has multimission (both geocentric and interplanetary) capability. Both in-core and out-of-core thermionics approaches are presented and discussed.

1. Baseline In-Core Design

The baseline in-core designs were developed under NASA Contract JPL 953104 (Ref. 3-4). The basic spacecraft was designed to perform both interplanetary and geocentric missions. Figure 3-13 shows the basic arrangement of components of the NEP stage for an interplanetary mission. A weight summary is presented in Table 3-9 and shows that the total system to be shuttle launched includes the basic NEP spacecraft, antenna and avionics module, science payload, and Centaur D1-T kick stage.

The NEP stage propulsion subsystem has a specific weight of 37.7 kg/kWe, based on 120 kWe delivered to the thrust subsystem. The in-core reactor is boomed off the forward end of the spacecraft and includes a control actuator section of approximately 92-cm diameter. This diameter dictates the forward spacecraft cone angle and thus the associated shield dimensions and weights.

2. System Definition and Assumptions

The high-temperature reactor for use with out-of-core thermionics and the associated thermionic converter and heat exchanger (TCHE) was defined by JPL as shown in Fig. 3-14. For the 120-kWe design, the baseline power supply envelope is 60 cm in diameter, with the total length varying from 135 to 155 cm, depending on the heat pipe length. Reactor and TCHE

masses were taken as variable parameters in the study. Several assumptions were made relative to integration of the reactor and TCHE assembly into the basic end thrust spacecraft. These include:

(1) The thermal and electrical output from the reactor core are the same as for the in-core design: 1430 and 136 kW, respectively.

(2) The separation distance between the reactor and the critical NEP stage power conditioning electronics remains the same for both in-core and out-of-core configurations. This implies no change in the lithium hydride (LiH) shield thickness from the value calculated in the previous study.

(3) There is a pumped liquid loop between the TCHE and the primary radiator.

(4) Mercury propellant inventories were assumed the same for both designs: 5500 kg (required for 20,000-hour interplanetary mission) and a 5000-sec specific impulse.

(5) All other components and their relative locations are common to spacecraft using either reactor design.

These assumptions permit key system integration questions to address the dimensions and weight constraints imposed by the requirement to launch an NEP stage from the space shuttle.

3. Out-of-Core Integration Approach

The basic approach for integrating the out-of-core power supply into the 120-kWe end-thrust vehicle is illustrated in the schematic of Fig. 3-15. The reactor is mounted forward in the stage, with the TCHE adjacent to the LiH shield assembly to increase the separation distance from the PC electronics. The coolant piping from the TCHE to the primary heat pipe radiator will have the same routing as the in-core design. Low-voltage cable length will also be comparable. Based upon the constraints discussed in the preceding paragraph, the only NEP stage characteristics affected by this integration approach are stage length, center of gravity, cone angle, and lithium hydride shield mass.

With the out-of-core power supply assembly integrated as discussed, the basic NEP stage length will range from 12.9 to 13.1 m, for the reactor

plus the TCHE lengths of 1.35 and 1.55 m, respectively. By comparison, the in-core stage length (Fig. 3-13) is 12.8 m. The maximum overall spacecraft length for a long power supply including the Centaur and NEP payload is 18.2 m, which will fit within the 18.3-m shuttle payload bay.

4. Shielding Requirements

In accordance with guidelines established for the reference in-core study, the power conditioning electronics and other radiation-sensitive components have been shielded to neutron and gamma integrated dose limits of 10^{12} nvt ($E_N \geq 1.0$ MeV) and 10^6 rads, respectively. Shielding calculations performed by NASA/LeRC and summarized in Part III, Section III-A-4, were utilized. Since, for the 120-kWe end-thrust design, the dose planes need not be altered from the in-core design, the axial shield thicknesses remain the same, and the values computed by NASA/LeRC were used directly. The neutron shielding requirement is satisfied with 55 cm of lithium hydride. The baseline axial mercury propellant thickness of 25 cm reduces the overall mission integrated dose to the PC electronics to less than 10^6 rads. To further reduce this integrated dose to 10^5 rads, about 2.5 cm of permanent tungsten gamma shielding is required, increasing weight by 620 kg.

The effect of reactor and/or TCHE diameter and length on lithium hydride shield weight is shown in the parametric curves of Fig. 3-16. Length is varied from 1.35 to 1.55 m, and diameter is varied from 40 to 80 cm. In the curves plotted for criteria of 10^{12} nvt ($E_N \geq 1.0$ MeV) and the specified geometries, the out-of-core configuration shield mass is less than required corresponding to the in-core design. The reduction of reactor mass from 973 to 725 kg is the result of the specified smaller shield diameter associated with the out-of-core design. It is noted that the reference in-core system has a well-defined envelope, including that necessary to accommodate the control drum actuators. The lower shield weight projected for the specified out-of-core thermionic system may well reflect relative lack of definition of such necessities.

5. Out-of-Core System Mass/Shuttle Integration

Figure 3-17 shows that, as established for the in-core system, a wide range of out-of-core NEP system masses, the 120-kWe NEP end-thrust

stage can be packaged within allowable Space Shuttle payload weight and center of gravity limits. Data is presented for reactor plus TCHE masses from 800 up to 2160 kg. For the baseline reactor mass of 800 kg and dimensions of 60-cm diameter by 1.35-m length (defined by JPL as baseline), the overall launched mass is 27,400 kg. This includes the 15,900-kg fully fueled Centaur D1-T (Ref. 3-5). The baseline out-of-core launched mass is within the 29,450-kg Shuttle payload capability. As was true with the in-core design, to provide an acceptable CG location with the fully fueled Centaur, it is necessary to locate some portion of the mercury propellant in tanks positioned on the aft bulkhead of the primary radiator.

Even though not addressed specifically in this study, the previous in-core study showed that the NEP stage geocentric payload configurations were compatible with the Space Shuttle payload center of gravity envelope, and the out-of-core thermionic power system does not change this conclusion.

C. SIDE-THRUST, 120-kWe CONFIGURATION

This section describes preliminary designs and weights for a side-thrust NEP spacecraft delivering 120 kWe to the thrust subsystem. The spacecraft is designed for interplanetary missions, with the same requirements as for the end-thrust configuration discussed in Part III, Section III-B. Both in-core and out-of-core thermionics approaches are presented.

1. Baseline In-Core Design

The baseline in-core design was developed under NASA contract JPL 953104. The general arrangement and physical dimensions of the 120-kWe side-thrust NEP configuration developed under the reference contract are shown in Fig. 3-18. The spacecraft is designed to be shuttle-launched by folding in two places as shown. In addition, the configuration was designed to carry geocentric payloads. Since the payloads considered for geocentric orbit missions are larger than the science payload for interplanetary missions and extend outside the 1.6-m basic diameter of the vehicle, additional reactor radiation shielding was necessary. For the present study, interplanetary missions are of primary concern for comparison of in-core and out-of-core concepts, and thus the additional shielding was omitted in the baseline in-core stage definition.

The spacecraft shown in Fig. 3-18 was also not designed to carry a full 20,000-hour interplanetary mission inventory of propellant. Therefore, the design was revised to include 5500 kg of mercury to provide the same 20,000 power hours of mission capability as the end-thrust configuration discussed in the previous section.

The resulting revised baseline 120-kWe side-thrust-stage weight summary for the in-core power system is shown in Table 3-10. The NEP stage has a specified weight of 41.4 kg/kWe, based on 120 kWe delivered to the thrust subsystem. This is about 4 kg/kWe heavier than the corresponding in-core end-thrust configuration. The primary difference is attributable to the additional shielding resulting from the shorter separation distance between reactor and PC electronics in the side-thrust configuration.

2. System Definition and Assumptions

The high-temperature out-of-core reactor and thermionics power system is the same as defined in Fig. 3-14 for the 120-kWe output required. Assumptions pertinent to its integration into the spacecraft are also the same as those discussed in the previous section.

3. Out-of-Core Integration Approach

The basic approach for integrating the out-of-core power supply into the 120-kWe side-thrust vehicle is illustrated in the schematic of Fig. 3-19. As with the in-core design, the power system is contained within the primary radiator. Because of the available space, the out-of-core power system can be integrated into the side-thrust vehicle with consideration of weights and vehicle CG location only. Overall vehicle length in the flight configuration remains at approximately 18.3 m, the same as with the in-core power supply.

4. Shielding Requirements

Shielding criteria are the same as those discussed previously: 10^6 rads, gamma dose, and 10^{12} nvt ($E_N \geq 1.0$ MeV) neutron. Shielding thicknesses and weights are the same for both in-core and out-of-core designs, since reactor location, and thus separation distances, are the same.

To provide neutron shielding to doses of 10^{12} nvt, energies greater than 1.0 MeV, 55 cm of LiH is required. The initial 21-cm axial thickness

of mercury propellant provides a lifetime gamma dose of 3.3×10^6 rads. To further reduce this to the 10^6 rads requirement, 1.5 cm of tungsten permanent gamma shielding is required, at a weight of 560 kg. An additional 3 cm (1120 kg) of tungsten would be required to reduce the gamma dose to 10^5 rads. Based on NASA-Lewis calculations a neutron requirement of 10^{12} nvt ($E_N \geq 0.10$ MeV) would lead to a 61-cm-thick LiH shield, or an approximate 11% increase in neutron shield weight.

5. Out-of-Core System Mass Shuttle Integration

For the baseline reactor (plus TCHE mass of 800 kg) the out-of-core flight system total mass is 4294 kg, with a specific mass of 35.8 kg/kWe. This is 5.6 kg/kWe less than the in-core design, due entirely to the specified reduced reactor assembly mass.

The integration of the 120-kWe side-thrust configuration into the shuttle is shown in Fig. 3-20. The plot is shown as a function of reactor plus TCHE mass and indicates that, for power system masses up to approximately 1700 kg, acceptable shuttle integration can be achieved. In order to achieve acceptable shuttle packaging, however, both in-core and out-of-core vehicles must be folded as was shown in Fig. 3-18.

In addition, the mercury propellant must be off-loaded from the NEP stage to shift the overall shuttle payload far enough aft for shuttle launch. This will require weight penalties (not assessed) for additional tankage, pumps, and distribution. Also the mission plan must accommodate for pumping the propellant into the primary tanks before the NEP stage is removed from the shuttle.

IV. LOW-TEMPERATURE REACTOR DESIGNS

A. END-THRUST, OUT-OF-CORE, 240-kWe CONFIGURATION

This section defines preliminary designs and weights for an end-thrust NEP spacecraft incorporating a low-temperature out-of-core power system delivering 240 kWe end-of-mission (EOM) to the thrust subsystem. The reference high-temperature design and interplanetary mission constraints were discussed in Part III, Section III-A. The mission and payload requirements remain the same.

1. Assumptions and Definitions

The out-of-core reactor and thermionic assembly definitions were provided by JPL. The baseline dimensions for the power system were presented in Fig. 3-5 and include a 1.30-m-long TCHE assembly. The diameter and reactor length were considered as variable parameters in Part III, Section III. Integration was found to be achievable for the complete reactor diameter range of 0.40 to 0.80 m investigated, with no unique problems associated with reactor size or mass. Thus for the Low-Temperature Reactor Design Study the baseline out-of-core reactor dimensions of 0.60-m length × 0.60-m diameter were used. In addition, no separation was included between the reactor and TCHE. The resulting power system envelope is 1.90 m long and 0.60 m in diameter. A brief summarization of the dimensions and performance characteristics received from JPL for the baseline out-of-core, low-temperature power system is given in Table 3-11.

Integration of the low-temperature power system into the NEP stage is assumed to be accomplished in the same manner as for the high-temperature reactor assembly. This assumption serves to maintain a constant distance between the thruster plane and the rear face of the reactor for all 240-kWe spacecraft designs. By not shortening the reactor support boom, any additional ion thruster interaction with the reactor is avoided. Also, the difference in overall spacecraft length between the high-temperature and low-temperature designs is dictated solely by the difference in length of the primary radiator. For installation within the shuttle cargo bay, telescoping of the spacecraft is assumed to be the same as either package concept A or B on Fig. 3-4.

2. Primary Radiator Tradeoffs

The primary radiator consists of sodium-filled stainless-steel heat pipes axially mounted on stainless-steel circumferential headers. The radiator surface area is sized to reject the maximum amount of heat from the power system at the end of mission and allows for the area blocked by the power transmission cable that runs the length of the radiator.

A parametric study of radiator area and geometry requirements was performed for the baseline low-temperature reactor power system for a reactor power output of 1000 kWt. The heat sink temperature for radiator

sizing was taken as 166 K, and a 100 K temperature drop across the radiator was assumed. Figure 3-21 shows the required radiator area for a 30% efficient system for coolant temperature entering the radiator between 700 and 850 K. As seen from the figure, significant area penalties are paid for collector temperatures below 800 K. Reducing the collector temperature from 800 to 700 K will require approximately a factor of 2 increase in radiator area.

Figure 3-22 illustrates the interaction between radiator length resulting from low-temperature reactor operating characteristics and spacecraft integration in the shuttle bay. The maximum allowable radiator lengths for the NEP stage having a fixed reactor assembly and a deployable (collapsible) radiator assembly are shown as 6.05 and 10.1 m, respectively. The payload length is taken as 3.7 m for both integration approaches. If a deployable reactor assembly is acceptable, the collector temperature can be as low as 750 K for a 30% efficient system, and the spacecraft will still fit into the Shuttle bay. If, however, the reactor assembly must remain fixed on the extended boom within the Shuttle, the minimum collector temperature for a packageable 30% system is approximately 800 K.

Alternative designs for the end-thrust configuration would involve shortening the reactor boom and paying associated shielding weight penalties. In addition, thruster cant would have to be increased to avoid ion engine interactions with the reactor assembly. This would reduce the effective thrust, or require more ion engines.

For the baseline low-temperature configuration, a collector temperature of 800 K has been assumed. Based on the heat rejected at the end of mission, the required radiator surface area is 69.8 m^2. By adding the area of blockage for low- and high-voltage cables, the required total primary radiator area is 80.3 m^2. This is approximately 9.0 m^2 greater than the area required by the high-temperature reactor design, and necessitates a 0.66-m-longer radiator, having an 81-kg-greater mass.

3. Shielding Requirements

The neutron shield consists of a lithium hydride stainless-steel honeycomb enclosed in a stainless-steel can. The overall assembly density is 1.0×10^3 kg/m^3. The neutron shielding requirement of 10^{12} nvt ($E_N \geq 0.1$ MeV) will require approximately 120 kg additional shield mass.

For the baseline low-temperature system, the propellant tank is sufficiently thick to limit the gamma dose below the 10^6 rads requirement without additional permanent gamma shielding. To achieve protection to 10^5 rads, 677 kg of permanent tungsten shielding would be required.

4. Design Configuration Definition

The integration of the out-of-core reactor assembly with the spacecraft is shown in Fig. 3-23. The distance between the thruster plane and the rear face of the reactor remains constant as shown. The location and dimensions of the overall boomed package including power system, shielding, and mercury propellant tanks are given in the figure. The shorter reactor length results in smaller shield diameter and thus lower shield weights than for the high-temperature, in-core baseline. Figure 3-23 also shows the additional radiator length added to the aft end of the conical primary radiator of the baseline high-temperature design. This 0.66-m radiator length is added at the maximum 4.6-m diameter as a cylindrical add-on to the baseline radiator.

5. System Mass/Shuttle Integration

A listing of the propulsion system component masses for the out-of-core low-temperature system is presented in Table 3-12. The figures for total mass of 6078 kg and specific mass of 25.3 kg/kWe are much lower than those previously presented for the high-temperature designs. The corresponding high-temperature out-of-core design specific mass is 28.2 kg/kWe. The higher mass is approximately equally attributable to the reactor mass and neutron shield mass.

The integration of the 240-kWe spacecraft configuration into the shuttle and the shuttle CG constraints on spacecraft payload is illustrated in Fig. 3-24. The figure indicates that the baseline out-of-core configuration can have a spacecraft payload between 0-7400 kg and meet the total liftoff

capability and CG constraints of the Shuttle. By comparison, the maximum payload capability of the high-temperature reactor spacecraft is only 6900 kg. Thus the low-temperature approach yields a 500-kg-larger maximum payload capability. For both designs, Shuttle integration is accomplished as in package concept B of Fig. 3-4, with the reactor assembly at the aft end of the shuttle cargo bay.

B. END THRUST, IN-CORE, 240-kWe CONFIGURATION

This section defines preliminary designs and weights for an end-thrust NEP spacecraft incorporating a low-temperature in-core power system delivering 240 kWe end of life (EOL) to the thruster subsystem. The reference high temperature design and interplanetary mission constraints were discussed in Part III, Section III-A. The mission and payload requirements remain the same.

1. Assumptions and Definitions

The weight and volume of the low-temperature in-core reactor used in the study are based upon the GE 300-kWe beginning-of-mission (BOM) flashlight reactor described in Table 3-5, page 3-17 of Ref. 3-6. This reactor is assumed to provide 240 kWe at end-of-mission. The physical reactor characteristics are shown in Fig. 3-25. The overall reactor length is 91.5 cm; the diameter is 73.5 cm. The total weight, including thermionics, is 1350 kg. The reactor thermal characteristics, per JPL, are assumed to be identical to the out-of-core low-temperature reactor and are summarized in Table 3-11.

2. Primary Radiator Design

Since the thermal characteristics of the reactor are identical to those of the out-of-core design, the primary radiator requirements will also be the same. For the 800 K collector temperature, the required total radiator area is 80.3 m^2, with a total mass of 735 kg.

3. Shielding Requirements

The neutron shielding requirement of 10^{12} nvt ($E_N \leq 1.0$ MeV) is met with 32 cm of lithium hydride, based upon NASA/LeRC calculations as noted previously. The total shield mass is 373 kg. Shielding to 10^{12} nvt ($E_N \geq 0.1$ MeV) will require approximately 87 kg additional shield mass. The shield mass is about half of that required for the out-of-core low-temperature system, primarily due to the reduced power system length and the associated smaller shield diameter.

For the baseline low-temperature system, the propellant tank is sufficiently thick to limit the gamma dose below the 10^6 rads requirement without additional permanent gamma shielding. To achieve protection to 10^5 rads, 419 kg of permanent tungsten shielding would be required.

4. Design Configuration Definition

The integration of the in-core reactor assembly with the spacecraft is shown in Fig. 3-26. The distance between the thruster plane and the rear face of the reactor remains constant as shown. Shielding weights are seen to be reduced due to the shorter power system length of the in-core reactor and the smaller diameter shield. The primary radiator configuration shown is identical to the out-of-core spacecraft.

5. System Mass/Shuttle Integration

A listing of the propulsion system component masses for the in-core low-temperature system is presented in Table 3-13. The total mass is 6389 kg, with specific mass of 26.6 kg/kWe. This is 1.3 kg/kWe heavier than the low-temperature out-of-core design, due entirely to the heavier power system. However, the low-temperature in-core is 1.6 kg/kWe lighter than the 240-kWe high-temperature out-of-core system.

The integration of the 240-kWe spacecraft configuration into the shuttle and the shuttle CG constraints on spacecraft payload illustrated in Fig. 3-27. The figure indicates that the baseline in-core configuration can have a spacecraft payload between 0-8800 kg and meet the total liftoff capability and CG constraints of the Shuttle. By comparison, the maximum payload capability of the high-temperature reactor spacecraft is 6900 kg, and the maximum capability for the low-temperature out-of-core design is

7400 kg. Thus, comparing the low-temperature systems, the in-core design basic spacecraft is heavier, but the overall shuttle-launched configuration has a 1400-kg-greater payload capability. No ballast was considered for either design in the comparison, even though the possibility for ballasting exists since neither design with maximum payload exceeds the 29,450-kg shuttle launch capability.

Shuttle integration is accomplished as in package concept B of Fig. 3-4, with the reactor assembly at the aft end of the shuttle cargo bay.

REFERENCES

3-1. "Space Shuttle Baseline Accommodations for Payloads," MSC-06900, NASA Manned Spacecraft Center, Houston, Texas, June 27, 1972.

3-2. "Nuclear Electric Propulsion, Mission Engineering Study," Final Report, Vol. II, DIN 73SD4220, General Electric Company, Mar. 1973.

3-3. Wrights, G. N., NASA-Lewis data, Nov. 7, 1972.

3-4. "Nuclear Electric Propulsion Mission Engineering Study," Final Report, Vol. II, General Electric Company, Document No. 73SD4219, Mar. 1973.

3-5. Launch Vehicle Estimating Factors For Advanced Mission Planning, NASA Document NHB 7100.5 B, 1973.

3-6. "Thermionic Spacecraft Design Study," (Phase I Report), GESP-7031, Jan. 1970.

Table 3-1. Propulsion subsystem mass summary: high-temperature thermionics, 240-kWe system

	In-core configuration		Out-of-core configuration	
Power subsystem mass, kg	4519		4789	
Thrust subsystem mass, kg	2065		2065	
Total propulsion subsystem mass, kg		6584		6854
Propulsion system specific mass, kg/kWe		27.5		28.6
Maximum spacecraft payload mass, kg[a]	8050		7000	(7780)[b]

[a]Limited by shuttle payload CG constraints.

[b]Use of "ballast" to shift CG of shuttle cargo.

Table 3-2. Propulsion subsystem mass summary: high temperature thermionics, 120-kWe system, end-thrust spacecraft

	In-core configuration		Out-of-core configuration	
Power system mass, kg	3533		2617	
Thrust subsystem mass, kg	1086		1086	
Total propulsion subsystem mass, kg		4619		3703
Propulsion system specific mass, kg/kWe		38.5		30.8
Spacecraft payload mass, kg	120		120	

Table 3-3. Propulsion subsystem mass summary: high-temperature thermionics, 120-kWe system, side-thrust spacecraft

	In-core configuration		Out-of-core configuration	
Power subsystem mass, kg	3874		3256	
Thrust subsystem mass, kg	1260		1095	
Total propulsion subsystem mass, kg		5134		4351
Propulsion system specific mass kg/kWe		42.8		36.2
Spacecraft payload mass, kg	120		120	

Table 3-4. Propulsion subsystem mass summary, low-temperature thermionics, 240-kWe system

	In-core configuration		Out-of-core configuration	
Power subsystem mass, kg	3765		3275	
Thrust subsystem mass, kg	2803		2803	
Total propulsion subsystem mass, kg		6568		6078
Propulsion system specific mass, kg/kWe		26.6		25.3
Maximum spacecraft[a] payload mass, kg	8800		7400	

[a]Limited by shuttle payload CG constraints.

Table 3-5. Mass breakdown for high-temperature, 240-kWe, in-core thermionic NEP system (2 reactors in tandem)

Propulsion system, kg			9019
Power system, kg		6954	
Reactors[a]	2880		
Heat rejection subsystem	1438		
Neutron shield[b]	1180		
Permanent gamma shield[b]	324		
Hotel power conditioning (PC)	100		
Hotel PC radiator	72		
Low-voltage transmission cable	738		
Pump cable	2		
Structure	170		
Startup auxiliary power supply	50		
Thrust system, kg		2065	
Thruster array	610		
Power conditioning	610		
PC radiator	441		
High-voltage cable	4		
Mercury propellant tanks and distribution	330		
Structure	70		
Propulsion system specific weight, kg/kWe			37.6
Propellant system, kg		11,000	

[a]Personal communication from J. Stearns.

[b]Neutron dose = 10^{12} nvt ($E_N \geq 1.0$ MeV); gamma dose = 10^6 rads.

Table 3-6. Mass breakdown for high-temperature, 240-kWe, in-core thermionic NEP system (one reactor)

Propulsion system, kg			6584
Power subsystem, kg		4519	
Reactor[a]	1529		
Heat rejection subsystem	1438		
Neutron shield[b]	470		
Hotel power conditioning (PC)	100		
Hotel PC radiator	72		
Low-voltage transmission cable	738		
Pump cable	2		
Structure	170		
Thrust subsystem, kg		2065	
Thruster array	610		
Power conditioning	610		
PC radiator	441		
High-voltage cable	4		
Mercury propellant tanks and distribution	330		
Structure	70		
Propulsion system specific weight, kg/kWe			27.5
Propellant system, kg		11,000	

[a]Personal communication from J. Stearns.

[b]Neutron dose = 10^{12} nvt ($E_N \geq 1.0$ MeV); gamma dose = 10^6 rads.

Table 3-7. Mass of reactor assembly

Reactor diameter, m	Mass, kg
0.4	1233
0.6	1274
0.8	1325

Table 3-8. Mass breakdown for high-temperature, 240 kWe, out-of-core thermionic system

Propulsion system, kg			6854
Power system, kg		4789	
Reactor[a]	1274		
Heat rejection subsystem	1438		
Neutron shield[b]	905		
Permanent gamma shield[b]	40		
Hotel power conditioning (PC)	100		
Hotel PC radiator	72		
Low-voltage transmission cable	738		
Pump cable	2		
Structure	170		
Startup auxiliary power supply	50		
Thrust system, kg		2065	
Thruster array	610		
Power conditioning	610		
PC radiator	441		
High-voltage cable	4		
Mercury propellant tanks and distribution	330		
Structure	70		
Propulsion system specific weight, kg/kWe			28.6
Propellant system, kg		11,000	

[a]Reactor diameter = 60 cm; reactor + TCHE = 2.09 m.

[b]Neutron dose = 10^{12} nvt ($E_N \geq 1.0$ MeV); gamma dose = 10^6 rads.

Table 3-9. 120-kWe end-thrust mass summary (in-core thermionics)

	Mass, kg
Basic NEP stage	
Power subsystem	3533
Thrust subsystem	1086
Propellant subsystem	5500
Total	10,119
Avionics subsystem	
Avionics	460
Antenna subsystem	
Antenna and support boom structure	42
Shuttle payload supports	
Forward and aft payload support pallets	1645
Science payload	
Science payload	120
Centaur	
Centaur and fuel	15,900
Total system to be shuttle-launched	28,286

Table 3-10. 120-kWe side-thrust mass summary (in-core thermionics)

	Mass, kg
Basic NEP stage	
Power subsystem	3874
Thrust subsystem	1260
Propellant subsystem	5500
Total	10,634
Avionics subsystem	
Avionics	460
Payload support and docking	
Shuttle payload support	
Pallet and docking assembly	1105
Science payload	
Science payload	120
Centaur	
Centaur and fuel	15,900
Total system to be shuttle-launched	28,219

Table 3-11. Baseline out-of-core low-temperature power system characteristics

Configuration parameters			
Diameter, m			0.60
Length, m			1.90
Mass, kg			800
Thermionic elements	91	TCHE 262	
NaK	28		
Container	93		
Miscellaneous	50		
Reactor		500	
Heat pipes		38	
Number of thermionic cells			2048
Performance parameters			
Reactor thermal power, kWt			1000
Gross electrical output at BOL, kWe			290
Net electrical output at EOL, kWe			240
Average emitter temperature, K			1400

Table 3-12. Mass breakdown for low-temperature, 240-kWe, out-of-core system

	Mass, kg	
Power subsystem		
Reactor + TCHE	800[a]	
Heat rejection subsystem	1519	
Neutron shield	682[b]	
Hotel PC	100	
Hotel PC radiator	72	
Pump cable	2	
Structure	170	
		3275
Thrust subsystem		
Thruster array	610	
PC	610	
PC radiator	441	
LV cables	738	
HV cables	4	
Structure	70	
Propellant tank	330	
		2803
	Total	6078

Specific weight = 25.3 kg/kWe

[a]Reactor diameter = 60 cm; reactor + TCHE length = 1.89 m.

[b]Need 677 kg of tungsten for 10^5 rads, equivalent to 2.82 kg/kWe.

Table 3-13. Mass breakdown for low-temperature, 240 kWe, in-core system

	Mass, kg	
Power system		
Reactor	1350	
Heat rejection subsystem	1519	
Neutron shield	373[a]	
Hotel PC	100	
Hotel PC radiator	72	
Pump cable	2	
Structure	170	
		3586
Thrust subsystem		
Thruster array	610	
PC	610	
PC radiator	441	
LV cables	738	
HV cables	4	
Structure	70	
Propellant tank	330	
		2803
	Total	6389

Specific weight = 26.6 kg/kWe.

[a]Need 419 kg of tungsten for 10^5 rads, equivalent to 1.75 kg/kWe.

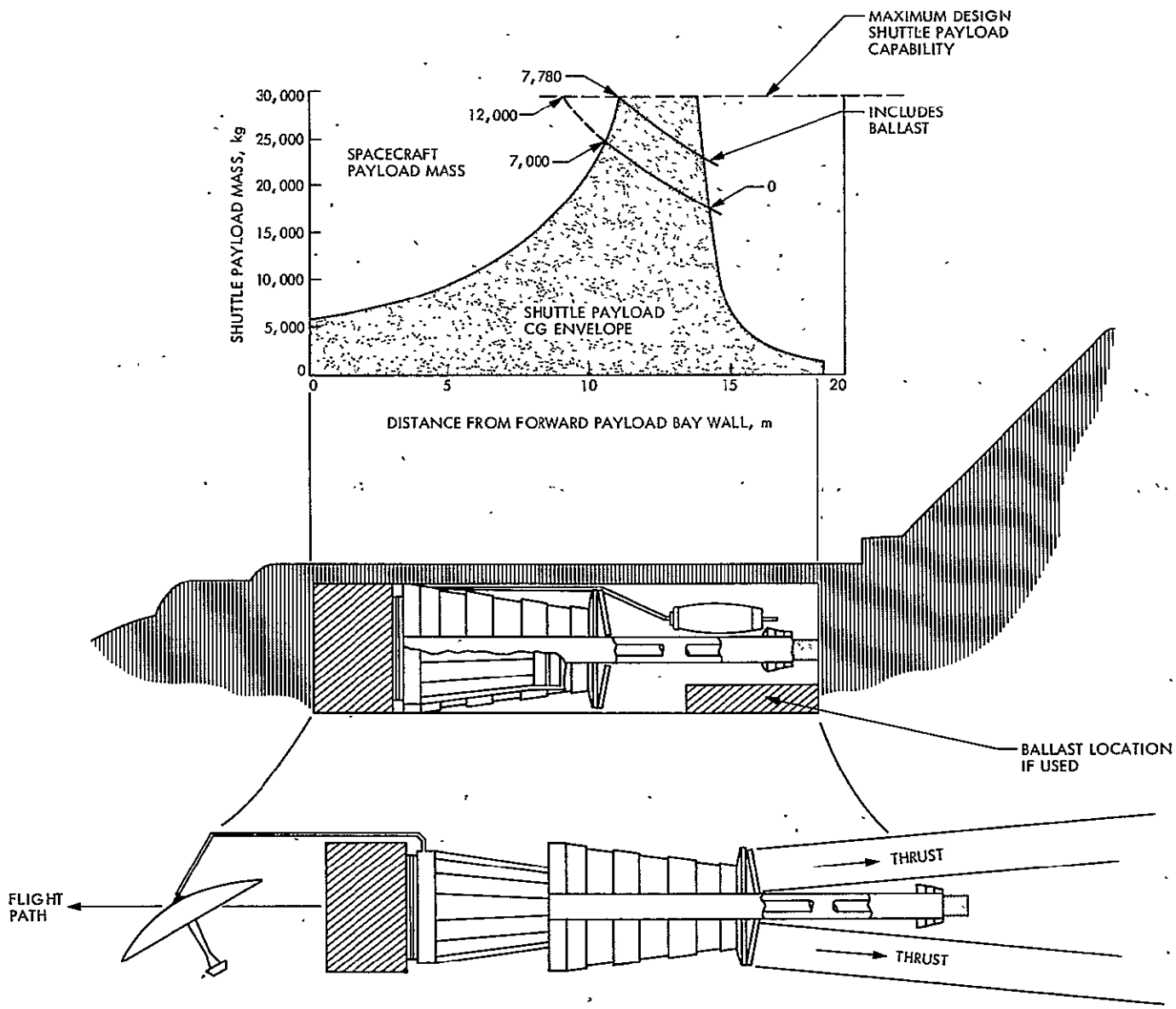

Fig. 3-1. NEP stage configuration, 240-kWe, high-temperature out-of-core design

ORIGINAL PAGE IS
OF POOR QUALITY

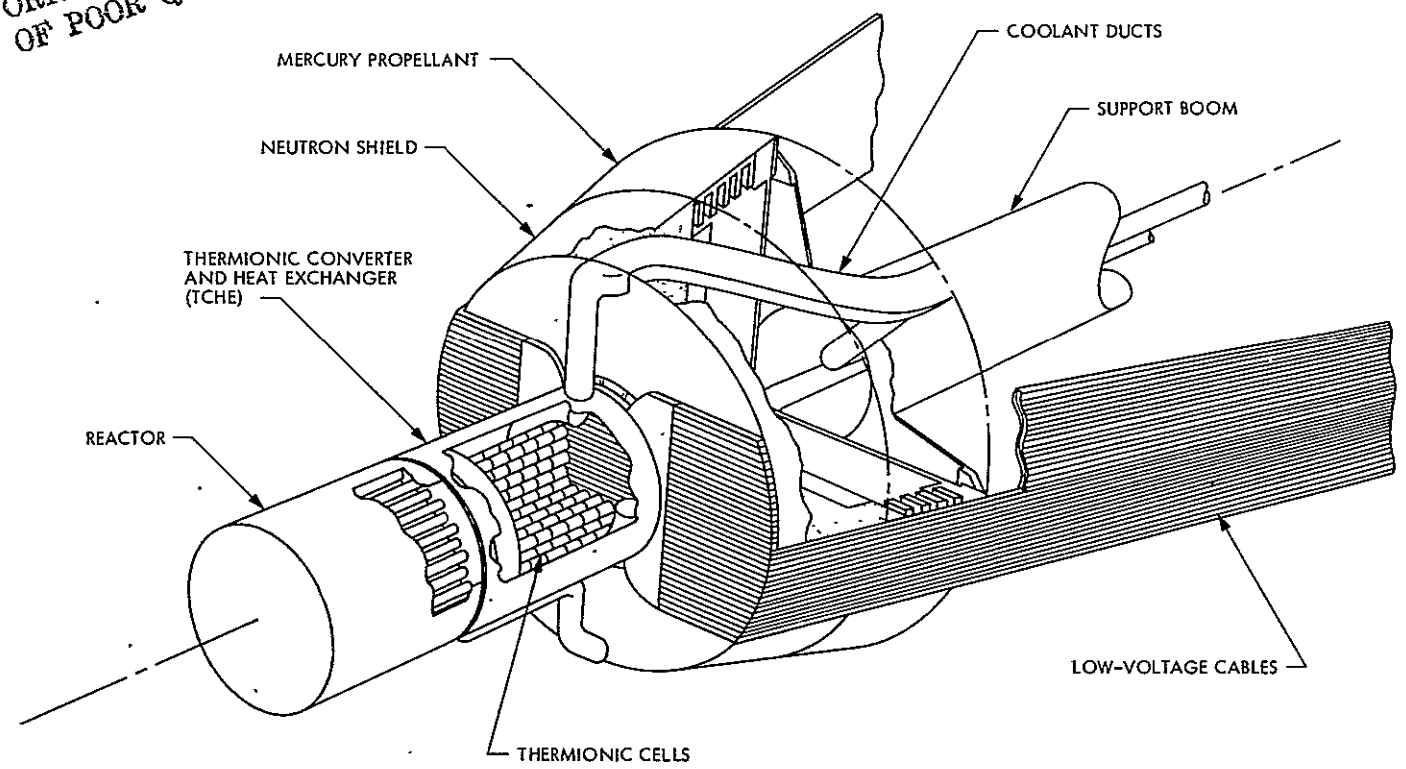

Fig. 3-2. Conceptual arrangement of out-of-core thermionic powerplant components in the vicinity of the reactor

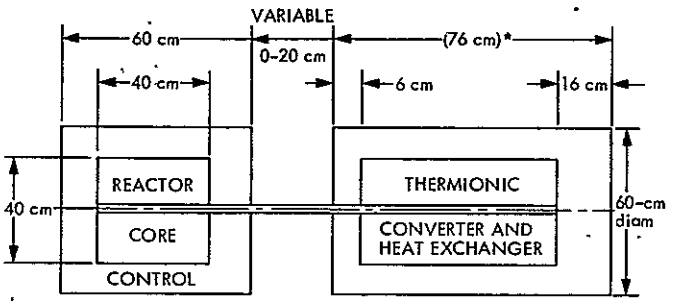

* (130 cm) FOR 240-kWe SYSTEM

MASS BREAKDOWN, kg			
COMPONENT	HIGH-TEMPERATURE SYSTEM		LOW-TEMPERATURE SYSTEM
	120 kWe	240 kWe	240 kWe
REACTOR	500	800	500
HEAT PIPES	50	93	38
THERMIONIC CONVERTER	222	381	262
TOTAL	772	1274	800

Fig. 3-3. Out-of-core thermionic power system characteristics

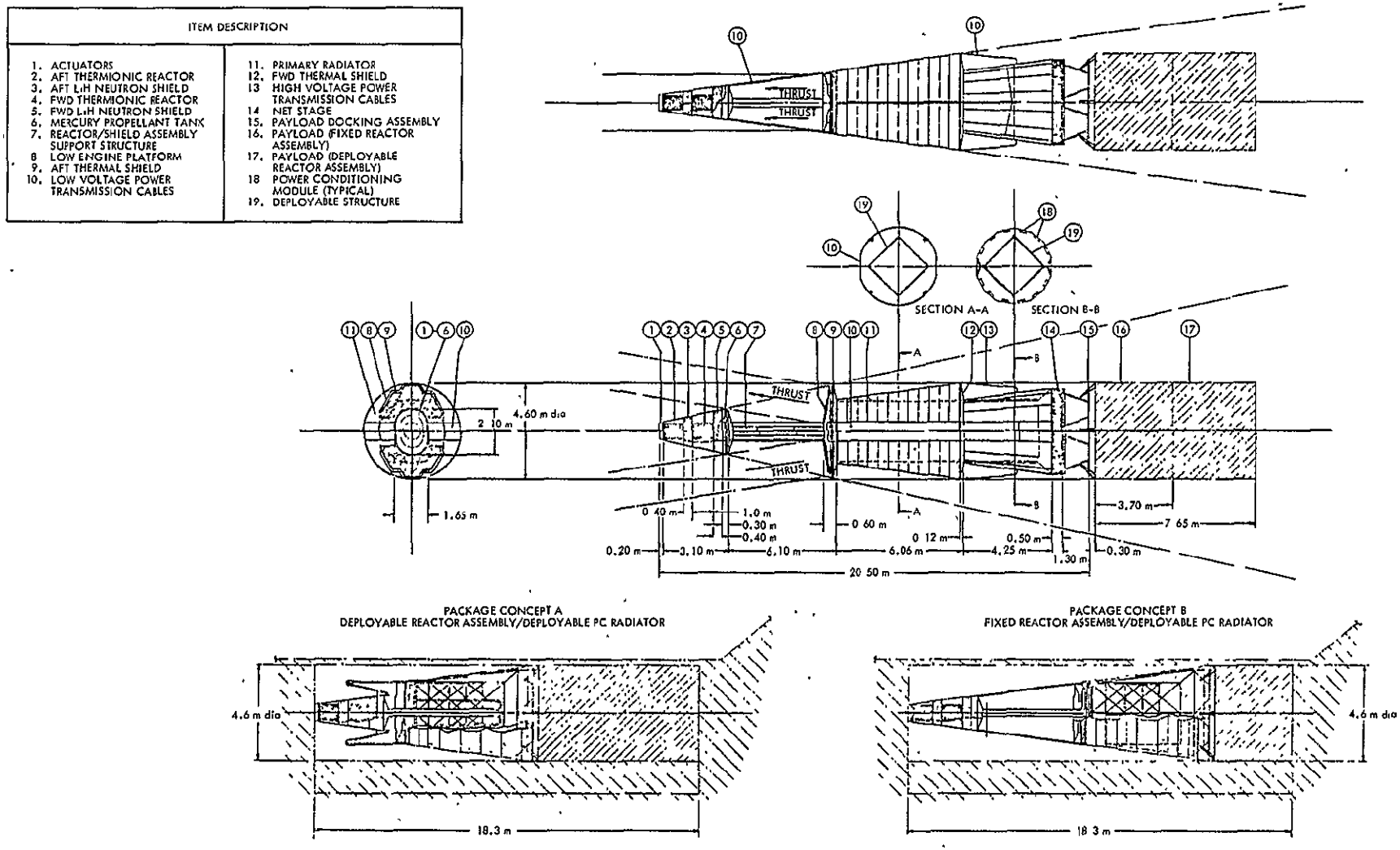

Fig. 3-4. 240-kWe NEP tug

ORIGINAL PAGE IS
OF POOR QUALITY

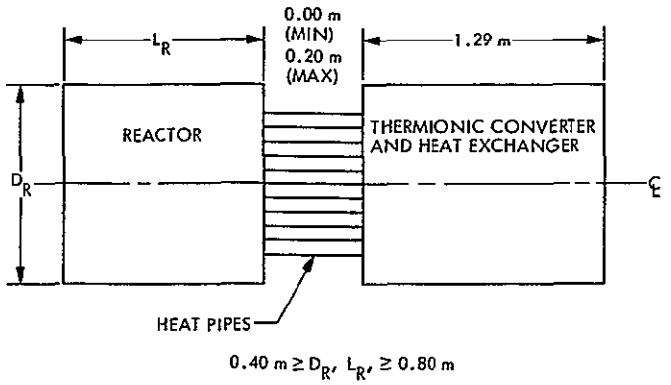

Fig. 3-5. Out-of-core reactor and thermionic assembly, 240-kWe system (net)

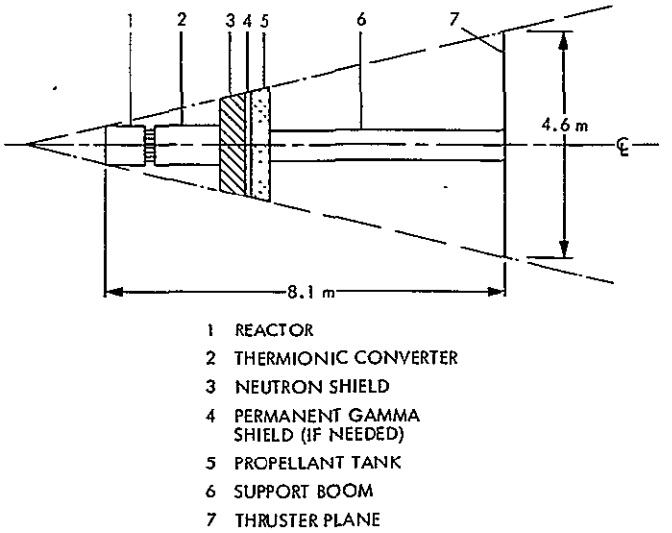

Fig. 3-6. Integration of out-of-core reactor assembly with spacecraft

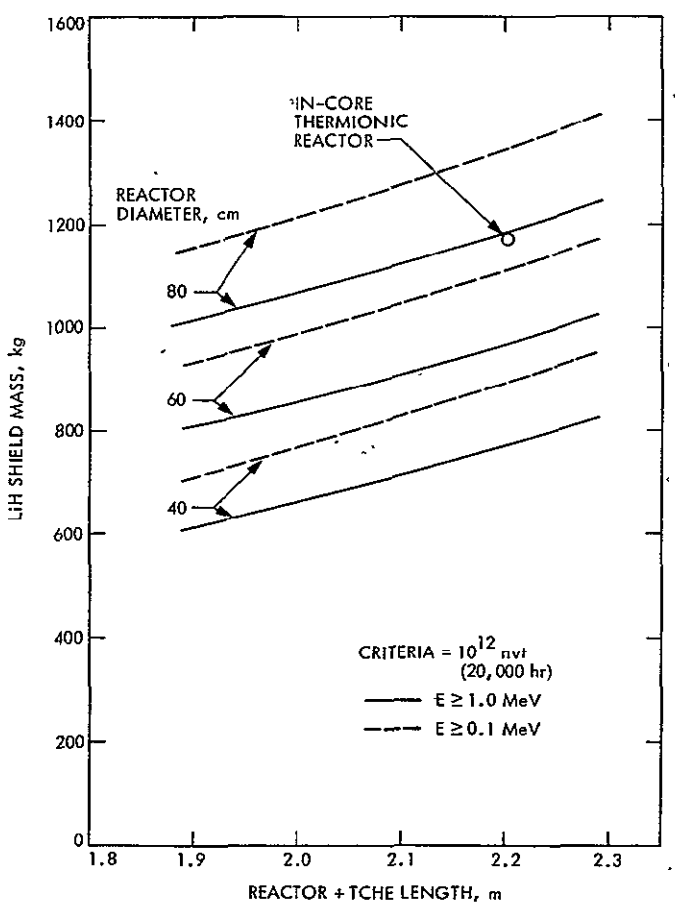

Fig. 3-7. Neutron shield mass: 240-kWe system out-of-core thermionics

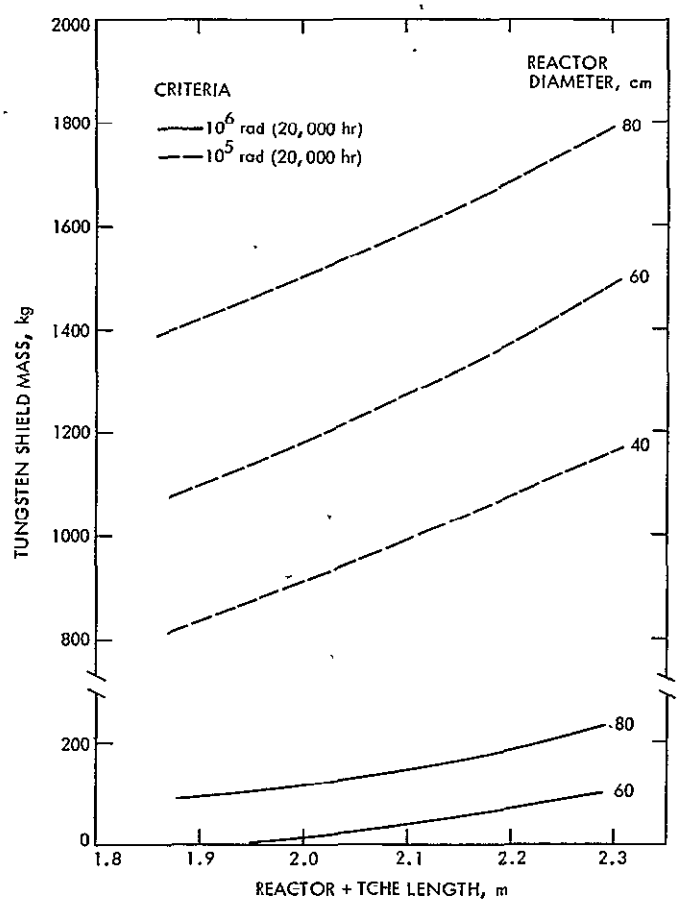

Fig. 3-8. Tungsten shield mass: 240-kWe system out-of-core thermionics

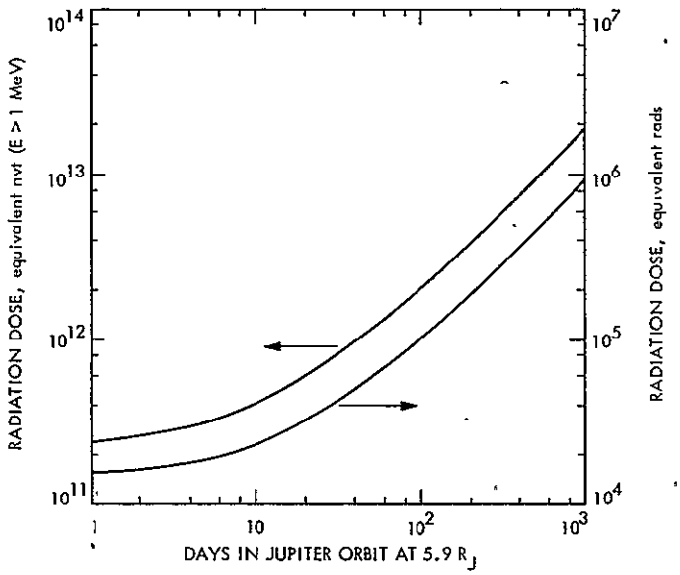

Fig. 3-9. Equivalent doses to power conditioning, Jupiter orbit

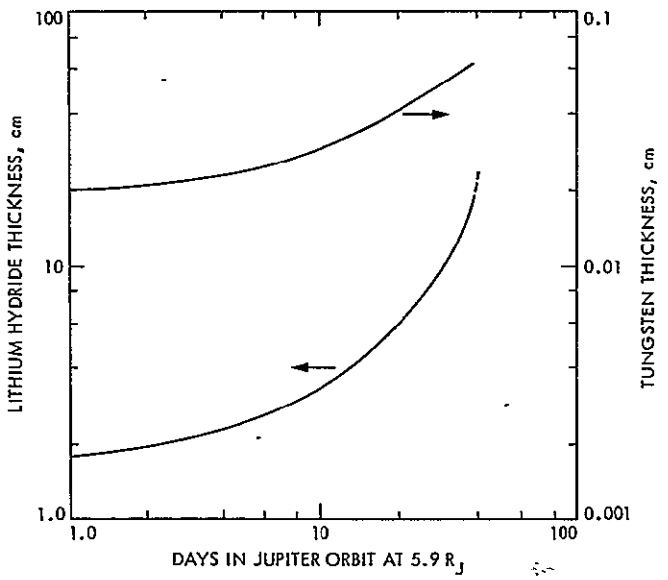

Fig. 3-10. Primary shield alterations required to offset Jupiter radiation

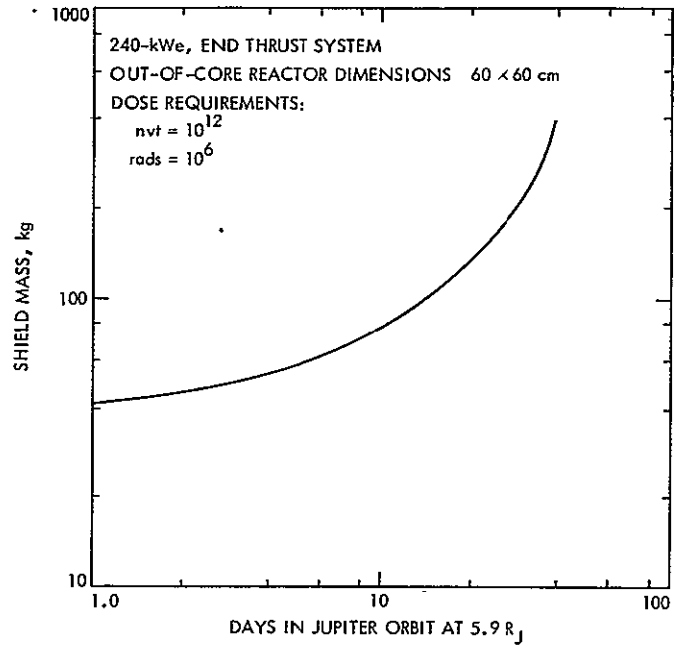

Fig. 3-11. Primary shieldmass additions required for Jupiter environment radiation

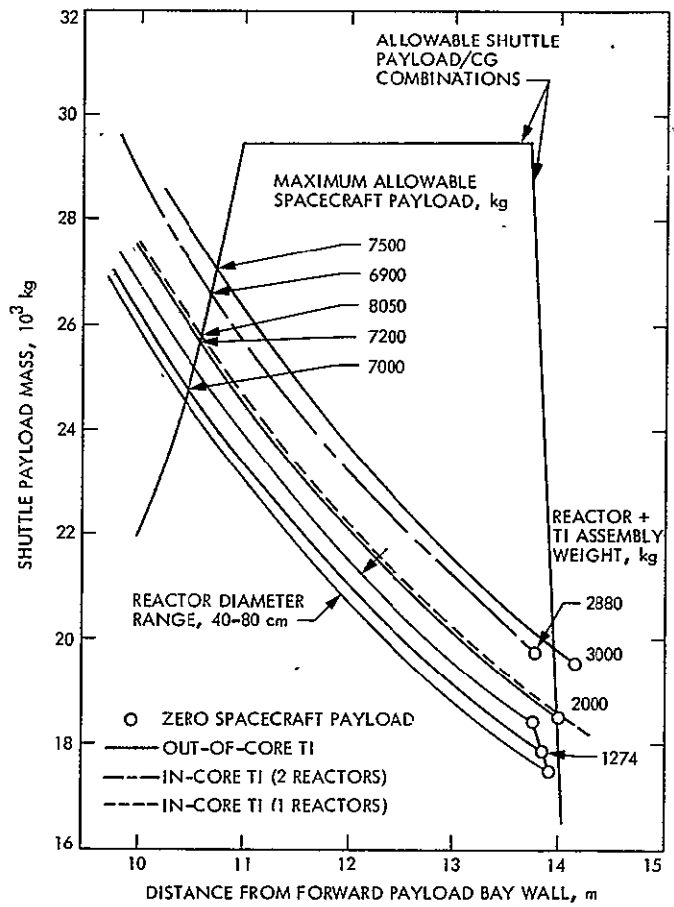

Fig. 3-12. Shuttle integration: 240-kWe system

ORIGINAL PAGE IS OF POOR QUALITY

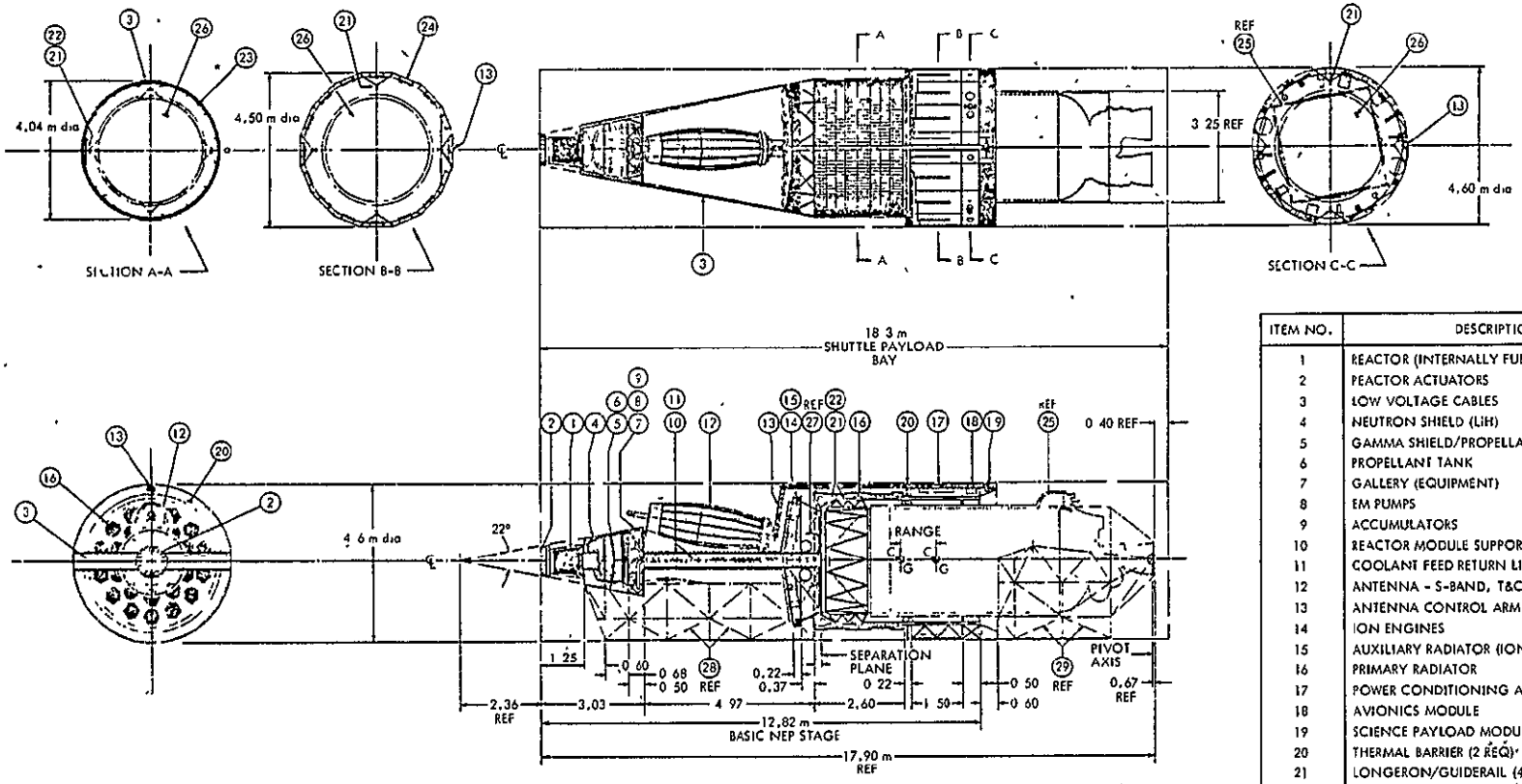

ITEM NO.	DESCRIPTION
1	REACTOR (INTERNALLY FUELED FLASHLIGHT)
2	REACTOR ACTUATORS
3	LOW VOLTAGE CABLES
4	NEUTRON SHIELD (LiH)
5	GAMMA SHIELD/PROPELLANT (Hg)
6	PROPELLANT TANK
7	GALLERY (EQUIPMENT)
8	EM PUMPS
9	ACCUMULATORS
10	REACTOR MODULE SUPPORT BOOM
11	COOLANT FEED RETURN LINES
12	ANTENNA - S-BAND, T&C, UNF FEED
13	ANTENNA CONTROL ARM
14	ION ENGINES
15	AUXILIARY RADIATOR (ION ENGINE)
16	PRIMARY RADIATOR
17	POWER CONDITIONING AND HOTEL RADIATOR
18	AVIONICS MODULE
19	SCIENCE PAYLOAD MODULE
20	THERMAL BARRIER (2 REQ)
21	LONGERON/GUIDERAIL (4 REQ)
22	SEPARATION GUIDING STRUCTURE
23	RADIATOR HEADERS
24	POWER CONDITIONING MODULE
25	DOCKING MECHANISM
26	CENTAUR (D-IT)
27	STORAGE TANKS - OPTIONAL (He)
28	FWD PAYLOAD SUPPORT PALLET
29	AFT PAYLOAD SUPPORT PALLET

Fig. 3-13. 120-kWe end-thrust NEP stage (in-core thermionics)

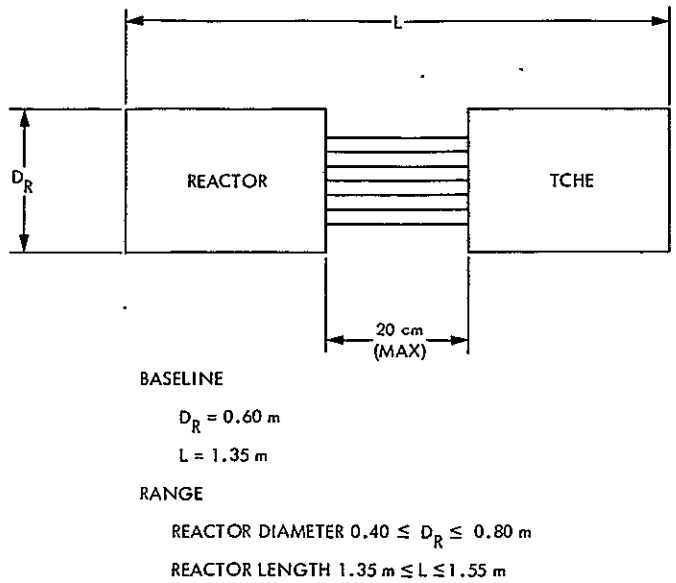

Fig. 3-14. Out-of-core power supply dimensions, 120-kWe system

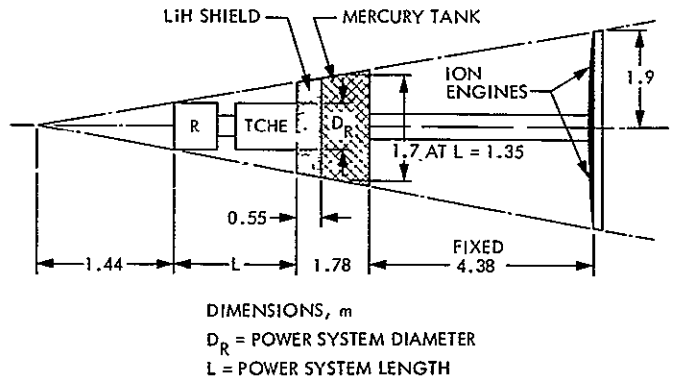

Fig. 3-15. Out-of-core revised configuration: 120-kWe end-thrust system

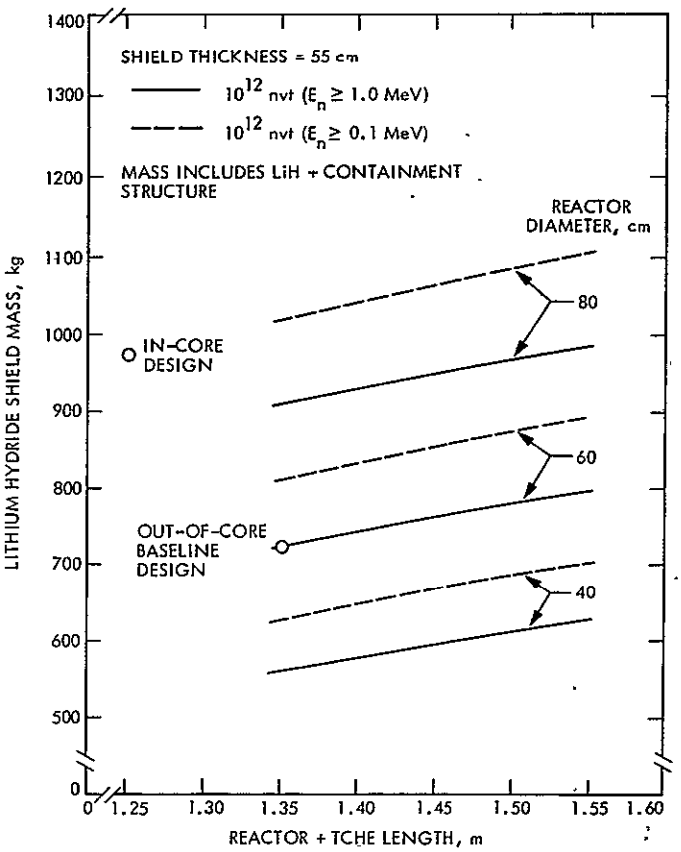

Fig. 3-16. Neutron shield mass: 120-kWe end-thrust system

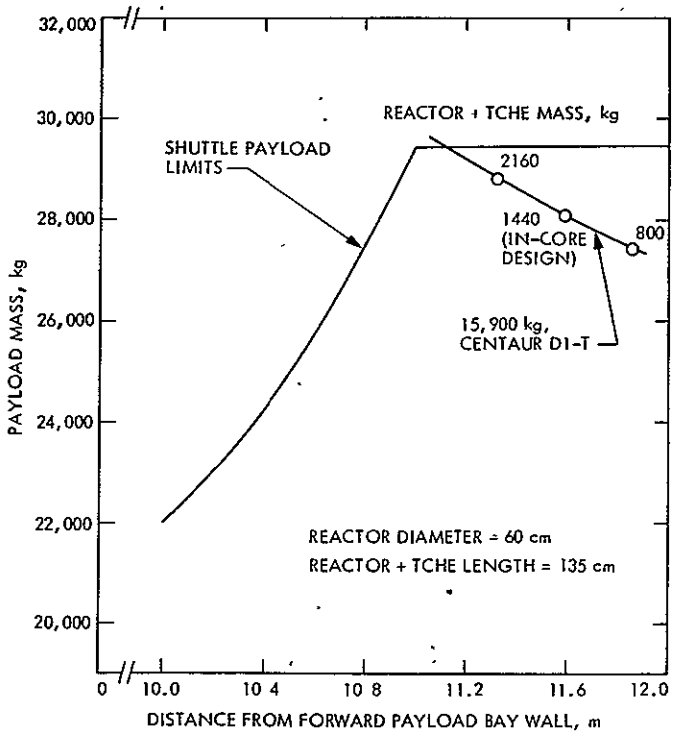

Fig. 3-17. Shuttle integration: 120-kWe out-of-core end-thrust system

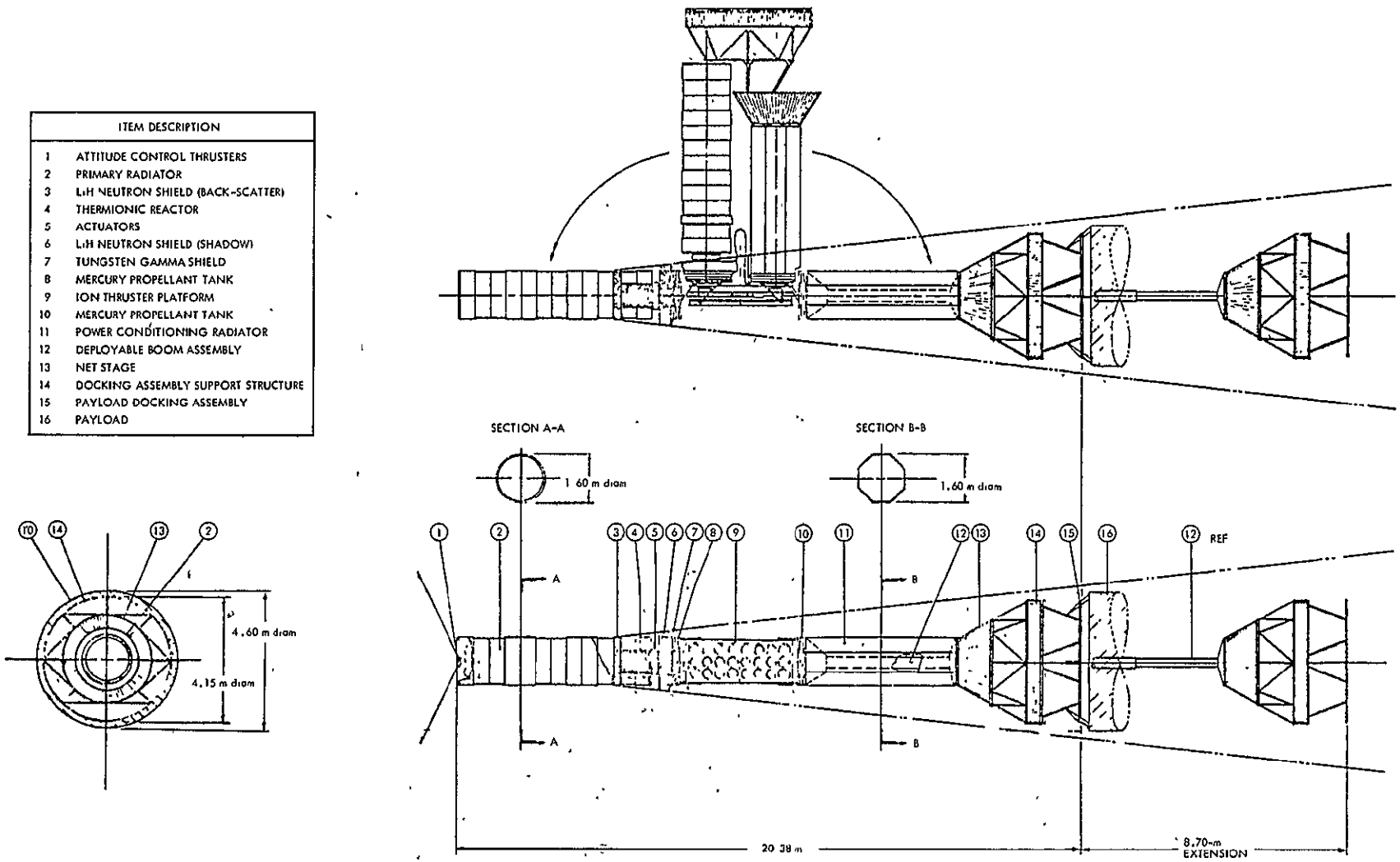

Fig. 3-18. General arrangement: 120-kWe NEP stage side-thrust configuration

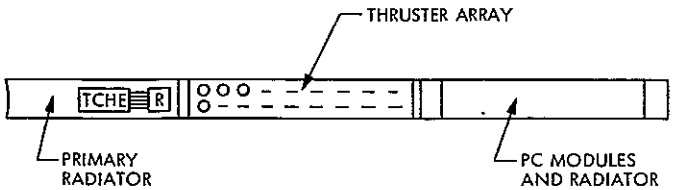

Fig. 3-19. Out-of-core integration schematic: 120-kWe side-thrust system

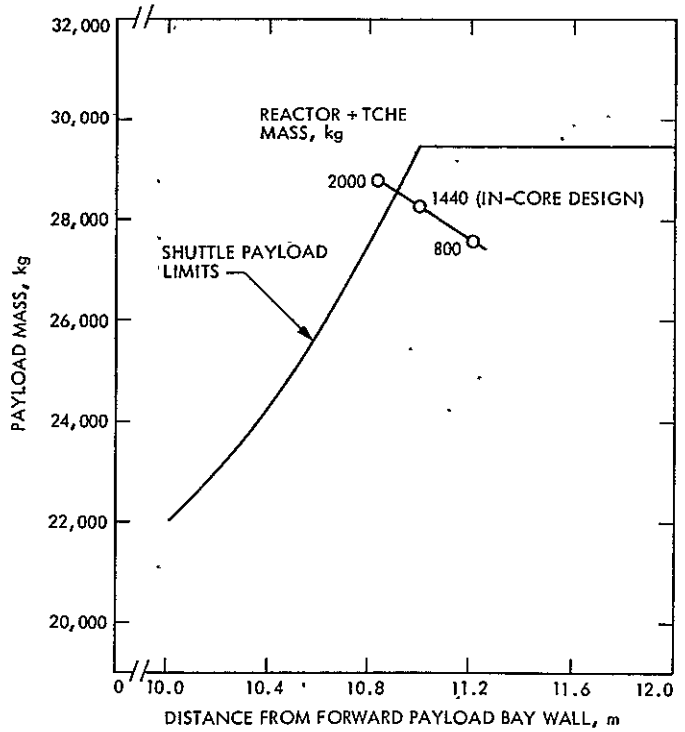

Fig. 3-20. Shuttle integration: 120-kWe side-thrust system

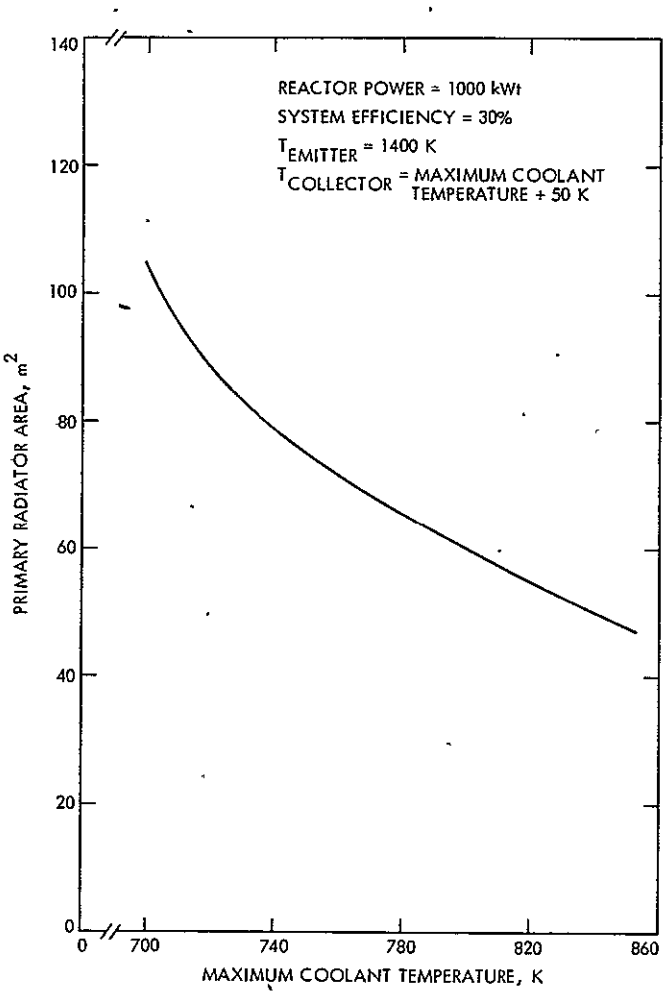

Fig. 3-21. Primary radiator area

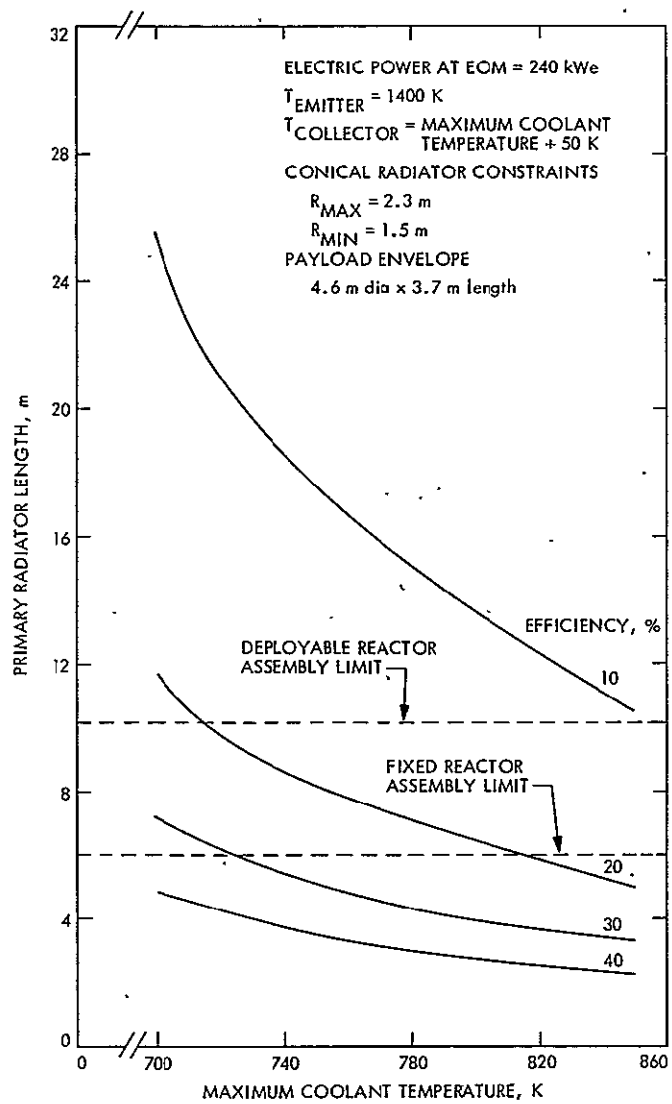

Fig. 3-22. Primary radiator requirements

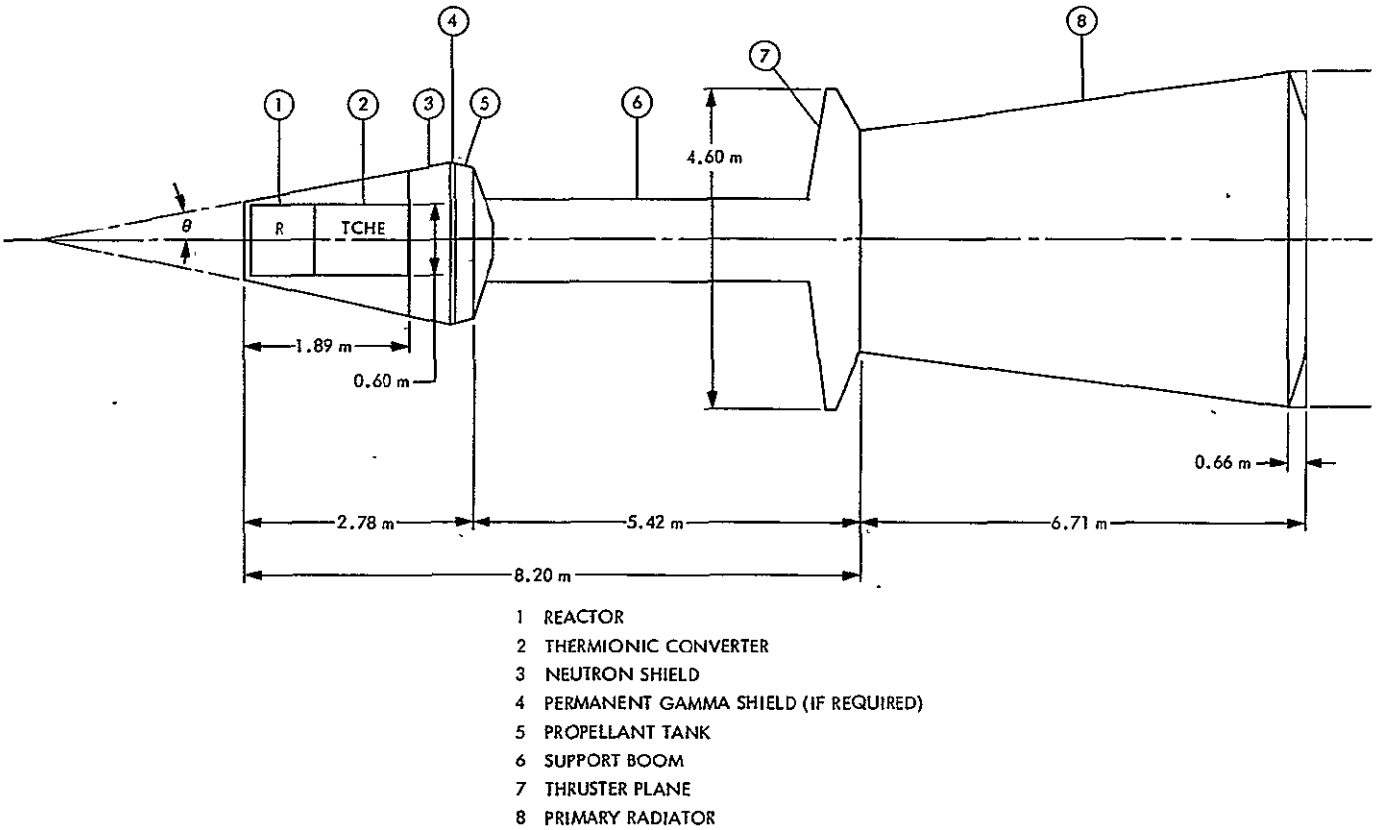

Fig. 3-23. Out-of-core, 240-kWe low-temperature design

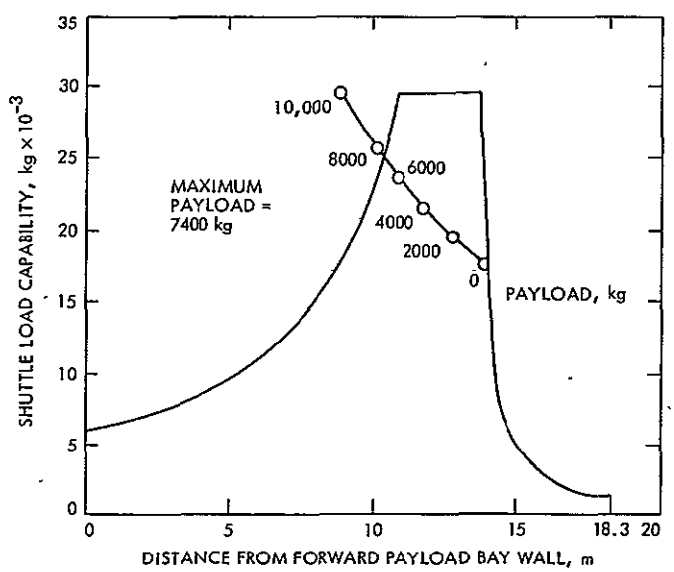

Fig. 3-24. Shuttle payload longitudinal center-of-gravity limits: 240-kWe, low-temperature, out-of-core design

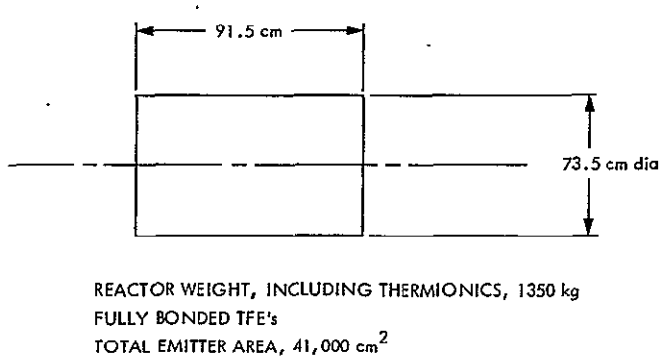

Fig. 3-25. Baseline, in-core, 240-kWe, low-temperature reactor

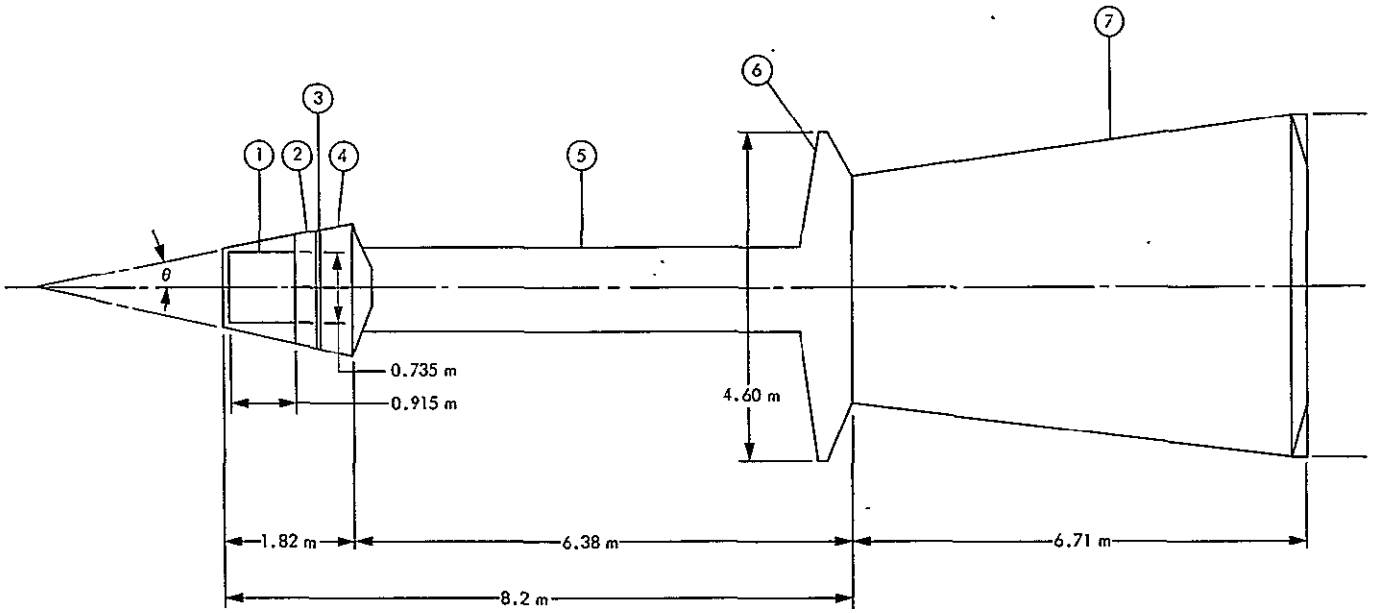

1 REACTOR
2 NEUTRON SHIELD
3 PERMANENT GAMMA SHIELD (IF REQUIRED)
4 PROPELLANT TANK
5 SUPPORT BOOM
6 THRUSTER PLANE
7 PRIMARY RADIATOR

Fig. 3-26. In-core, 240-kWe low-temperature design

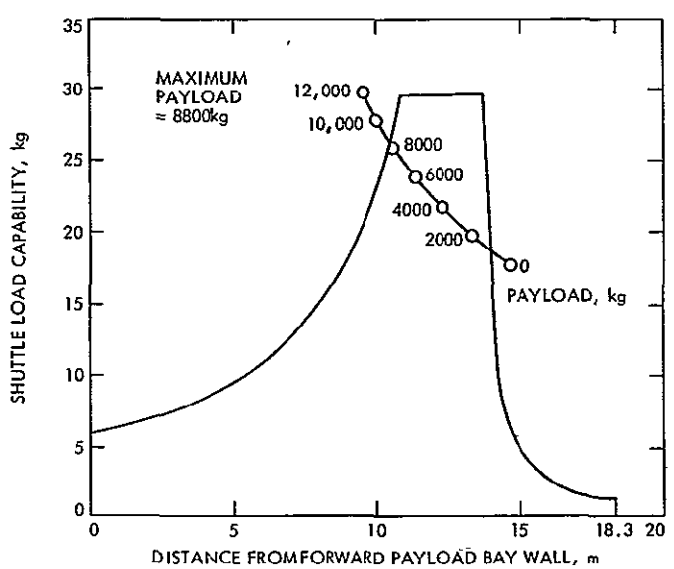

Fig. 3-27. Shuttle payload longitudinal center-of-gravity limits: 240-kWe, low-temperature, in-core design

NASA—JPL—Coml, L.A., Calif