General Disclaimer

One or more of the Following Statements may affect this Document

- This document has been reproduced from the best copy furnished by the organizational source. It is being released in the interest of making available as much information as possible.

- This document may contain data, which exceeds the sheet parameters. It was furnished in this condition by the organizational source and is the best copy available.

- This document may contain tone-on-tone or color graphs, charts and/or pictures, which have been reproduced in black and white.

- This document is paginated as submitted by the original source.

- Portions of this document are not fully legible due to the historical nature of some of the material. However, it is the best reproduction available from the original submission.

Produced by the NASA Center for Aerospace Information (CASI)

(NASA-CR-146414) A RESEARCH PROJECT TO DEVELOP AND EVALUATE A TECHNICAL EDUCATION COMPONENT ON MATERIALS TECHNOLOGY FOR ORIENTATION TO SPACE-AGE TECHNOLOGY Final Technical Report, 1 Jul. 1974 - (Norfolk

N76-17982

HC $6.00

Unclas

G3/80 14141

GRANT NSG-1073
FINAL TECHNICAL REPORT

A RESEARCH PROJECT TO DEVELOP AND EVALUATE A TECHNICAL EDUCATION COMPONENT ON MATERIALS TECHNOLOGY FOR ORIENTATION TO SPACE-AGE TECHNOLOGY

covering the period
July 1, 1974 - January 31, 1976

submitted to
N.A.S.A., Langley Research Center, Hampton, Virginia
Technical Officer, Harold Mehrens

prepared by
James A. Jacobs, Project Director
Mechanical Design Technology
Norfolk State College
Norfolk, Virginia 23504

January, 1976

Abstract

A RESEARCH PROJECT TO DEVELOP AND
EVALUATE A TECHNICAL EDUCATION COMPONENT
ON MATERIALS TECHNOLOGY FOR
ORIENTATION TO SPACE-AGE TECHNOLOGY

By
James A. Jacobs

January, 1976

This developmental applied research project aimed to provide an effective means of orienting non-traditional students, especially minorities and females, to engineering technology in general and to basic materials science in particular. A grant from the National Aeronautics and Space Administration through Norfolk State College provided Thomas Kilduff and me with the support to develop, implement, and evaluate a prototype component for self-pacing, individualized instruction on basic materials science.

While the instructional design primarily aimed at Norfolk State College and Thomas Nelson Community College, the Technical Education Component (TEC) also sought to provide supplementary resources for secondary school students. Barton Herrscher's model of an instructional system formed the basis on which Kilduff and I developed our TEC; it incorporated competency-based instruction that provided for mastery learning. A breakdown of the TEC into modules labeled STEM's (Self-pacing Technical Education Modules) and discrete learning packages or STEP's

(Self-pacing Technical Education Packages) permits updating and expansion of the TEC, selective use of STEM's or STEP's by secondary school teachers, and segmentation of materials in order to provide students with frequent feedback as they take pre- and post-tests with each STEP.

The nature and properties of plastics formed the prototype STEM that received field testing at Norfolk State College, Thomas Nelson Community College, and seven secondary schools in the Tidewater Virginia area. Feedback data from the prototype guided the research team in the development of the remaining STEM's to comprise the TEC. The entire prototype TEC, consisting of multi-media including programmed learning booklets, slide/tape presentations, and demonstration devices, received full implementation and evaluation in the first course of materials and processes of industry at Norfolk State College. Thomas Nelson Community College used the materials to supplement several of their technology courses. To distribute the TEC to secondary schools, we packaged the STEM's into four Career Awareness and Exploration Kits and conducted two workshops for area secondary school educators: one for counselors and one for industrial/technical educators. A jury of 22 engineers, technicians, educators, and counselors evaluated the various elements of the TEC as did students taught by the system. The majority of jurors evaluated the TEC as appropriate and accurate while they also made detailed comments for subsequent revisions.

The Norfolk State College (NSC) students taught with the TEC gave us favorable evaluations and useful comments. One of our ultimate goals aimed for at least 80 percent of the NSC students to master 80 percent of the

cognitive objectives. That goal was nearly reached with this prototype TEC since 79.1 percent of students mastered 80 percent of the objectives on all STEP's. This result compared to a proportion of 65.8 percent of all previous students who passed the same course. In testing the differences in proportions between passing students under the TEC and those passing under the traditional mode of instruction, the increase provided a z value significant at the .05 level of confidence. That number of students passing under the TEC also received significantly higher grade levels than previous students at the .01 level of confidence with a chi square test. The second ultimate goal sought to have at least 70 percent of the NSC students who used the TEC to express an interest in continued studies in engineering technology and thus reflect a desire to achieve the affective objectives of the TEC. With 68 percent of the students expressing such an interest, we nearly achieved the second goal.

Results of this project indicate that systematically developed, self-paced instruction does provide effective means for orienting non-traditional college students and secondary students, especially minorities, to both engineering technology and basic materials science. In addition, students using a system such as this TEC gain greater chances for mastering subject matter than with conventional modes of instruction. A greater commitment should come from those who control funds in education, industry, and government to adequately fund teams of educational technology specialists to develop systematic instruction. This TEC should receive such support in order to produce the desired finished products.

RESEARCH TEAM:

Project Director and Senior Researcher: James A. Jacobs

Associate Researcher: Thomas F. Kilduff

Typist: Carolyn M. Weaver

Laboratory Assistant: Albert E. Moore

N.A.S.A. - Langley Research Center Support:

Technical Officer: Harold Mehrens

Engineering Group Liaison: Samuel Scott

Editor: Ralph E. Kirkman

TABLE OF CONTENTS

	Page
LIST OF TABLES	iv
LIST OF FIGURES	vi
Chapter	
1. INTRODUCTION	1
THE BACKGROUND OF THE STUDY	1
THE STATEMENT OF THE PROBLEM	3
MAJOR ISSUES	4
2. SURVEY OF THE LITERATURE	6
A NEED FOR TECHNICIANS AND TECHNOLOGISTS	6
CAREER EDUCATION IN MECHANICAL DESIGN TECHNOLOGY	9
INCREASING THE PROBABILITY OF SUCCESS FOR STUDENTS IN ENGINEERING TECHNOLOGY	12
3. PROCEDURES AND TREATMENT OF DATA	19
DEVELOPING AND VALIDATING COMPONENT OBJECTIVES	19
STRUCTURING THE TECHNICAL EDUCATION COMPONENT (TEC)	21
PROTOTYPE STEM	24
COMPLETING TEC	36

TABLE OF CONTENTS (cont'd) Page

4. FINDINGS 47

JURY 47

STUDENTS 51

COST OF PROJECT 60

5. CONCLUSIONS AND RECOMMENDATIONS 62

CONCLUSIONS 62

RECOMMENDATIONS 64

BIBLIOGRAPHY

REFERENCES CITED 65

REFERENCES 71

APPENDIXES

A. PROTOTYPE STEM 73

B. TECHNICAL EDUCATION COMPONENT (TEC) 90

C. CONSULTANTS EVALUATION, STUDENT EVALUATION, BUDGET 113

LIST OF TABLES

Table		Page
1.	Secondary School Teachers' Comments on Plastics Module	28-29
2.	Summation of Secondary School Students' Evaluation of Plastics Module	31
3a.	Summation of Norfolk State College Students' Responses for STEP P-1 (Polymerization of Plastics)	32
3b.	Summation of Norfolk State College Students' Responses for STEP P-2 (Properties of Plastics)	33
4.	Comparison of Scores on Previous Unit Test with Scores on Plastics Module's Post-tests for Students at Norfolk State College	34
5.	Jurors	45
6.	Jurors Evaluation of STEP's	48
7.	Typical Jurors' Comments	49-50
8.	Student Make-up of TEC 145	52
9.	Step-by-Step Results of Students' Failure Rate	54
10.	Grade Distribution of Students Taking TEC 145: Traditional Instructional Mode Compared to TEC System	55
11-18.	Summation of Norfolk State College Students' Evaluation of STEP's C-1, O-1, O-2, O-3, P-1, P-2, M-1, M-2	121-128
19.	Summation of Student Evaluation of Teaching	57-58

LIST OF TABLES (cont'd)

Table Page

20. Frequency of TEC 145 Students Tabulated to Show Incidence of Grade and Whether They Received Technical Education Component or Traditional Mode of Instruction 60

21. Allocation of Time on Percentage Basis 61

LIST OF FIGURES

Figure		Page
1.	An Instructional System	15
2.	Flow Chart for Researching, Developing, Implementing and Evaluating a Self-instructional Component on Basic Materials Science	20
3.	Organization of TEC	22

Chapter 1

INTRODUCTION

This developmental applied research project embraces several areas of concern including the need for engineering technicians and technologists with awareness of engineering materials; an improvement in career education that reflects the career opportunities available in engineering technology, especially for minorities and females; and a system of instruction that increases the probability of success for non-traditional students in basic materials science.

THE BACKGROUND OF THE STUDY

Rapid advances in space-age technology have made many new materials and processes available to man, but utilization of new technology lags far behind its development. This lag results from (1) a general lack of knowledge among people prepared to employ the technology and (2) a shortage of qualified engineering technicians and technologists for government and industry. For example, colleges offering programs in engineering technology have numerous recruiters from federal government agencies (e.g., local National Aeronautics and Space Administration [NASA]) and industry (e.g., electric power companies) in search of graduating mechanical engineering technicians; but few students enter

such programs and even fewer graduate. Also the necessary encouragement for minorities and females to enter technical careers remains lacking even though these are well-paying jobs with considerable responsibility.

Producing more engineering technicians with basic knowledge of space-age materials and processes necessarily involves secondary schools. Many industrial education and vocational/technical programs in secondary schools, however, offer their students a limited program which emphasizes narrow skill development on limited materials and processes. Students completing such secondary school programs often fit the following descriptions:

1. involving significant numbers of minority races;
2. lacking sound academic skills in science, mathematics, and communications;
3. lacking basic knowledge of a wide range of materials and processes available to industry, particularly those generated by space-age technology;
4. lacking knowledge of opportunities, challenges, and satisfaction found in careers as engineering technicians.

When these young people enter technical colleges or apprenticeship programs, such undesirable traits frequently result in high attrition. Few minority workers enter engineering because of this dilemma. Consequently, post-secondary, as well as secondary, schools need readily usable information on space-age materials and processes which they can inexpensively integrate into their curricula. These materials should serve as orientation for students by offering information about engineering technology and should motivate them to pursue such careers.

Current learning theory and curriculum theory support the use of self-pacing instruction which provides for individual differences regarding the non-traditional student's background, learning mode, and learning speed. The systematic approach to instruction presents the student a rationale for learning, pre-assessment, learning alternatives, post-assessment, and opportunity for recycling to achieve learning mastery.

As a result of the preceding concerns and motivated by studies in Nova University's doctoral program, I sought assistance from the educational programs officer at NASA's Langley Research Center to develop strategies to address these concerns. The subsequent meetings resulted in submission of a proposal to NASA for a grant to develop an instructional component on basic materials science. NASA awarded a grant of $81,413.00 to Norfolk State College for an eighteen-month time frame with me serving as project director and senior researcher. Thomas Kilduff was chosen as co-researcher in the grant. With cost sharing included, the total cost of this developmental research project was slightly more than $90,000.00.

THE STATEMENT OF THE PROBLEM

This project involved developing, implementing, and evaluating an instructional component on basic materials science designed to serve as orientation to engineering technology and meet the needs of the non-traditional learner with regard to the learning mode, i.e., self-pacing and individualized.

The instructional component consists of modules devoted to major topics in basic materials science with the modules broken into instructional packages. The packages consist of both printed booklets and/or slides and audio tapes. College freshmen who enroll in materials and processes of manufacturing as part of their engineering technology curriculum are the primary audience. High school students in industrial education and science who can utilize the instructional packages to supplement their regular curriculum serve as the secondary audience.

This developmental research project provides a means of instruction based on current learning theory and educational technology to non-traditional students. While providing the researchers with valuable experience in developing systematic, individualized instruction, this project produced instructional material that will orient students, especially minorities and females, to engineering technology in general and to materials science in particular. The chosen mode of instruction aims to motivate students to pursue careers in engineering technology as they learn materials science.

MAJOR ISSUES

The research project (1) identified technical information and resources available at the technician's level on basic materials science; (2) determined the most efficient, effective means to deliver basic information on materials science for college technical students and others needing familiarity with basic materials science; and (3) researched and developed individualized instructional components, employing the results from (1) and (2), for

implementation by colleges and others who need effective media for orienting personnel to basic materials science. Norfolk State College students in the first course of materials and processes of industry used the materials from this developmental project. Basing the project on the theory of systematic instruction, the ultimate goals for improving instruction in the class follow: (1) at least 70 percent of the students using the materials will express interest for continued studies in engineering technology and thus reflect a desire to achieve the affective objectives of the instructional components; and (2) at least 80 percent of the students using the self-pacing technical education modules on basic materials science will achieve 80 percent of the cognitive objectives of the instructional component.

By supplying the instructional packages to area secondary schools for supplements to their resource materials, we should foster interest among students, counselors, and teachers in mechanical engineering technology. The individualized instruction design should provide useful information to the secondary teachers in their efforts to supplement their resources.

Chapter 2

SURVEY OF THE LITERATURE

As the United States reached its Bicentennial, many of her forefathers' elements of design achieved fruition. Two such elements include a strong and prosperous nation and a nation with a well-educated populace. Imbalances exist, however, in education and environment due to poorly planned technological growth and questionable educational priorities.

A NEED FOR TECHNICIANS AND TECHNOLOGISTS

Though increased technological developments have eased the work day, increased leisure time, reduced certain ailments, and produced many other improvements in our living conditions, haphazard management of technology produced a threat of "future shock." Toffler (1970) warned of a "technological engine" moving at an increasingly accelerated thrust and feeding on the fuel of knowledge which becomes richer and richer fuel each day. Fear of the consequences of "future shock" and threats to our delicate balance of nature have contributed to considerable anti-technology sentiment. The backlash caused by these feelings plus knowledge of surpluses in some fields of engineering in the late sixties and early seventies have resulted in an imbalanced supply of graduates for technical vacancies. Using several studies, Bulkeley (1974: 140-45) projects a shortage of

168,000 qualified technical people (engineers and technologists) between 1974 and 1982. Even in the early seventies when a surplus of engineers existed in certain fields, shortages of technicians (associate degree) and technologists (bachelor's degree) existed in most fields of engineering (Engineering Manpower Commission of Engineers Joint Council, 1971). Bureau of Labor Statistics reports predict a need for an increase of 57.4 percent or 1,200,000 technicians in the 1966-1980 period in order to meet the growing needs of industry, government, and other employers to design, construct, install, operate, supervise, produce, sell, and maintain our increasingly sophisticated technological equipment (American Society for Engineering Education, 1972). In the past seven years of teaching in mechanical engineering technology at the two-year and four-year levels, the number of job opportunities available to graduates in the programs in which I taught have far exceeded the number of graduates. Technology will obviously need an ample pool of qualified technical people to help solve energy, resource, pollution, and environmental problems.

Most of the engineering technicians and technologists, especially in mechanical engineering, need an understanding of the nature and properties of engineering materials. Many engineering technology curricula include one or two courses in industrial materials and processes. We have seen a recent surge in the development of materials courses for non-technical students such as the one developed at the University of Wisconsin at Madison which has the following goals:

> (1) to break down fear and alienation of these students to science and technology; (2) to educate students, giving them some "real" feeling for materials and not some facts to be memorized and returned at test time; (3) to make them wise and less gullible consumers; (4) to make them aware of the ecological and societal ramifications of materials; (5) to give them the ability to converse with technical people; and (6) to help them integrate "science" into their lives (Hirschhorn and Maxwell, 1974).

Materials science is an intriguing subject for freshmen students because it brings them into contact with both common materials and exotic materials affecting their everyday lives. Demonstration of basic phenomena sharpens the student's interest toward studying technology (Pond, 1975).

While interest in materials science at the engineering level receives considerable study including numerous papers presented at technical conferences and even the formation of a group to develop modules on materials science (The Pennsylvania State University Materials Research Laboratory, 1975) much in the same vein as this project, the technology level of education apparently lacks such efforts. Even with an increase in the number of textbooks available on materials and processes, a thorough search of Research in Education, Dissertation Abstracts, and journals has failed to reveal any significant efforts to teach materials science in engineering technology curricula with innovative techniques or to meet the needs of non-traditional students. Secondary school industrial arts projects such as the Industrial Arts Curriculum Project at Ohio State University, provide useful teaching strategies on manufacturing processes, but not on basic materials science.

CAREER EDUCATION IN MECHANICAL ENGINEERING TECHNOLOGY

It is a paradox that, even with sparse job opportunities for graduates of liberal arts, social sciences, and education curricula, enrollments in those curricula still increase. For example, Norfolk State College, a predominantly black institution, continues to see enrollments increase in liberal arts, social sciences, and education--yet enrollments in technology curricula remain small. In 1974, one firm that builds electric power plants had 2,000 openings for mechanical design technicians and showed special interest in minority and female graduates. With women constituting 51 percent of the U. S. population in 1970, the engineering field had only 1.62 percent women; blacks accounted for just 1.2 percent of the engineering force (Alden, 1974: 498-501).

Why do these imbalances exist? Why do not more students (minorities, females, and others) enter technical careers that offer good financial rewards, social esteem, and job satisfaction? We hear numerous answers--much conjecture--to these questions. The Engineers Council for Professional Development's Guidance Committee Task Force conducted a national survey to determine reasons why engineering students selected their field of study. The students revealed that advice from counselors, vocational interest tests, and talks with teachers had no significant influence on their choosing engineering as a career. The students felt guidance efforts should portray a more affirmative and attractive picture of engineering (Greenfield, 1974: 510-22). A California Polytechnic Institute survey of

counselors revealed a stereotype view of engineering students, including such traits as less socially adroit, more conservative than liberal, and not as capable of handling emotions as their counterparts in other majors (Corey and McKinley, 1974).

While studies reveal inadequate career guidance available to engineering students, my experience as a technical educator has revealed a lack of knowledge among counselors and high school teachers of career preparation and careers of engineering technicians/technologists. Through participation in career days, recruitment trips, and other interaction with secondary school personnel in the Tidewater Virginia area, I have learned that these people not only lack knowledge but also have little interest in increasing their understanding of these careers.

Efforts to emphasize career education in our public schools may be part of the solution to improving understanding of technical careers. A Nova practicum concerned with career education provided me some background for this project (J. Jacobs, 1975). Studies reveal the need of career information when data indicates parental influence as important in the student's career choice, but that underprivileged students do not benefit from sound parental guidance. Community college enrollments show students in college parallel programs come from higher socioeconomic backgrounds than those in technical programs even with the same tuition for all programs (Medsker and Tillery, 1971: 45-46). Yet at Norfolk State College with many underprivileged students, large enrollments exist in social sciences, humanities, and education as compared to technical curricula.

The reason for such curricula choices may result partly from blacks viewing associate vocational/technical programs as menial jobs that will send them "back to the cotton fields" (Gleazer, 1972: 104-07). Poor career orientation creates such enrollment trends. A study of 51,000 Indiana high school seniors revealed considerable confusion among high school students about differences between engineers and technicians and the type of preparation required for these fields. The data reveal the malleability in their career choices of students entering college and those in their first year, with many changing majors quite readily (Planning Commission for Expanding Minority Opportunities in Engineering, 1974: 63-68).

In my teaching, I found similar conditions. Students entering my technology curricula display confusion about careers and career preparation for engineering technology, engineering, vocational education, and industrial arts education. No clear answers reveal why minorities and females do not choose technical careers.

The National Science Foundation has sponsored twenty-two projects aimed at determining what factors lead low proportions of women to science-related careers. One researching team reported difficulties in obtaining information from teachers and parents (Work and Sloan, 1975). Jointly supported efforts by industry, government, professional societies, and the educational community aim at increasing career awareness in engineering and engineering technology, especially for minorities and females. This project utilized materials developed and data collected from these efforts.

INCREASING THE PROBABILITY OF SUCCESS FOR STUDENTS IN ENGINEERING TECHNOLOGY

Three years of teaching mechanical technology at a predominantly white community college and four years at a predominantly black senior college have caused me considerable frustration over the low rate of success attained by minority students in my curriculum. The typical student who enters the program reflects academic deficiencies that require from a year to a year and one-half of developmental English plus one to two courses in developmental math. Lacking clear goals and high motivation, few complete degree requirements. When the students drop out of college before graduation from either the associate's or bachelor's program, they often enter jobs related to their studies such as low level drafting or semi-skilled crafts. So in effect, they have attained gainful employment which is some measure of success. Many, however, fail to reach a stage where they can develop their potentials to the fullest, i.e., they have not become degreed engineering technicians with the broad-based education and credentials required for better career options. Instead they settle into jobs that lack flexibility and make them vulnerable to job obsolescence or limited advancement. What causes these conditions? What will increase these students' chances of success?

The minority student who comes from a family of non-professionals and has not had the opportunity to enjoy properly American affluence possesses little motivation for education because he cannot relate education to any personal advantage (McCrary, 1974). The disadvantages to these youth

result from lack of educational tradition in their culture, inadequate language and reading skills, poor motivation (they have few, if any, success models to emulate), poor self-esteem (results of twelve or more years in indifferent or hostile public schools), antagonism toward school and authority, poor health from inadequate diets, and life in unstable homes (Lockette and Davenport, 1971). Many of the Norfolk State College technology students meet these conditions. For these youth to respond to the educational program, they need to perceive commitment to giving them a fair chance (Feck, 1971).

Advances in learning theory and educational technology offer some assistance in meeting students' individual needs: ". . . most students (perhaps more than 90 percent) can master what we have to teach them, and it is the task of instruction to find the means which will enable them to master the subject under consideration" (Bloom, Hastings, and Madaus, 1971: 43). Bloom's theory of mastery has guided educators to seek instructional methods to allow students to obtain subject mastery rather than using education as the caliper for positioning students on the normal curve. Because of the heterogeneous mix with regard to academic background I have experienced with freshmen engineering technology students, individualized instruction is imperative to insure students' mastery of appropriate competencies.

Systems Approach and Individualized Instruction

Ralph Tyler began developing the systematic approach to instruction around 1935. The Armed Forces utilized his principles prior to

recent acceptance by the general education community. The systems approach developed from the engineering systems approach developed by engineers, psychologists, and systems and procedures analysts. The concept provides means to analyze instructional problems and to formulate logical procedures for solving problems. Tyler proposed the following major components for a systems approach: (1) statement of objectives in performance terms; (2) standards to judge objectives; (3) necessary activities to achieve objectives; and (4) final evaluation and revision procedures (Roueche and Pittman, 1972: 47).

Since Tyler's groundwork, numerous models developed for the systems approach to instruction, all of which embrace Tyler's four basic components. Kemp (1971); Popham and Baker (1970, 1973); Mager (1962, 1968, 1970, 1972, 1973); Mager and Beach (1967); Bloom, Hastings, and Madaus (1971); Bloom, Englehart, Furst, Hill, and Krathwohl (1956); Krathwohl, Bloom, and Masia (1964); Roueche and Herrscher (1973); Grayson and Biedenback (1974); and articles in "Special Effective Teaching Issue" of Engineering Education (1974) serve as theoretical base for systematic development of the instructional component on basic materials science in this project.

Herrscher's operational instructional system model synthesizes the works of Ralph Tyler, W. James Popham, Bela Banathy, and Jerrold Kemp (Herrscher, 1971: 4-27). Kilduff and I selected Herrscher's model (shown in Figure 1, page 15) for use in developing the instructional component in this project. This model aims at providing for individual differences among students while seeking to develop instruction based on criterion-referenced evaluation.

These factors make the model compatible with Kilduff's and my goals for this project.

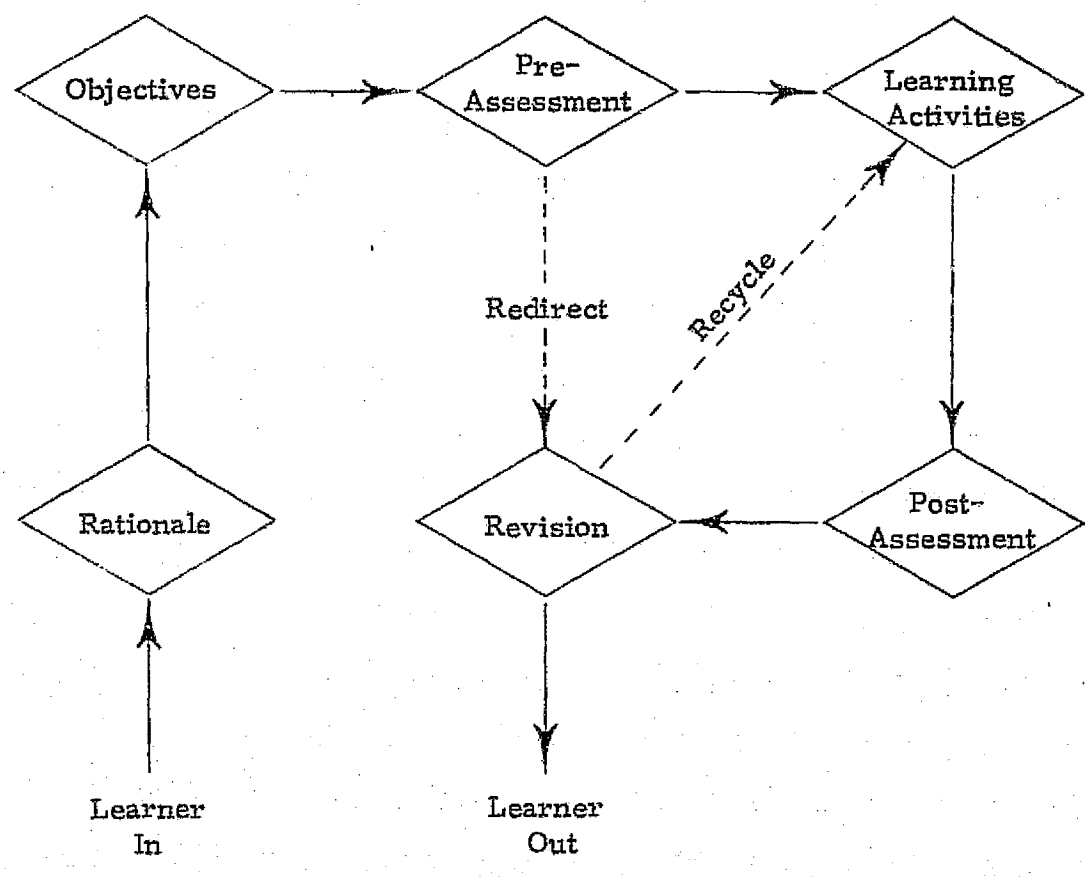

FIGURE 1 An Instructional System

Herrscher's model of an instructional system, current learning theory, and educational technology stress use of instructional modules and learning activity packages which provide the following:

1. pre-assessment of student;
2. prescribed learning activities based on pre-assessment;
3. learning activities with intermediate feedback and ample mediation;
4. post-assessment with provisions for recycling through learning activities until the student achieves subject mastery (Herrscher, 1971; Postlethwait and Russell, 1973: 24-32; Kapfer, 1973: 33-37; Flammer and Mechan, 1974: 432-35; McCollum, 1974: 427-29; Ruskin, 1974; Sherman, 1974; Kozak, 1974).

The learning activity packages incorporate programmed instruction which provides immediate feedback to the student. During a 1960-64 period, 112 studies matched programmed instruction against conventional instruction. The results showed 41 percent of the programmed superior, 49 percent with no difference, and 10 percent inferior (Lange, 1972: 59). A 1965 summary of studies included several medical school studies and a law school study; the results in these technical programs reveal programmed instruction as more effective or at least as effective as the conventional approach (Abrahamson, 1965: 341-42). Beyond the mid-sixties, few studies compared the effectiveness of programmed instruction over conventional instruction; rather, they emphasized research to improve programmed instruction (Lange, 1972: 59). McKeachie (1974: 7-11), however, discounts much of

Thorndike's and Skinner's Laws of Learning used to develop programmed instruction. McKeachie feels we can use much of the core of the laws if we use caution against over-simplification.

A summary of current research findings on the Personalized System of Instruction (PSI) presents a good picture of the success of individualized instruction by the Kellar method (Ruskin, 1974: 23-35). The report cautions of the many problems of controlling variables in a typical classroom setting and the consequent criticism of this type of research. In studies done in the late sixties and early seventies, PSI compared equally or better to traditional learning methods. For example, one study that typifies the PSI research revealed at $p > .0001$ a significantly better performance of PSI students on multiple-choice exams as compared to conventionally taught students (McMicheal and Corey, 1969: 79-83). PSI also yielded significantly better results for students involved in both essay, recall, and application type evaluation; and even with use of short quizzes throughout PSI courses, students of this experimental approach equalled the performance of control students on complex final exams. Also, PSI held up to tests of retention rates. Use of PSI across many disciplines helps substantiate the claims of its superiority by the proponents of this form of individualized instruction. Ruskin (1974: 23-32) advises caution, though, in accepting the results since factors vary from conventional teaching techniques, e.g., higher withdrawal rates which could eliminate poorer students.

Research in both individualized instruction and programmed instruction provides the developer of such materials with ample resources

on methodology. A search of dissertation abstracts, however, failed to turn up more than a few dissertations which utilized a developmental approach to research in individualized instruction. Studies by Wyatt (1974) and Wasserman (1974) offer valuable insight into some of the problems. I located only three dissertations which focused on developing self-instructional materials in technology--fortunately, one in materials science (Bockerman, 1971; Abitia, 1971; Holland, 1973).

Chapter 3

PROCEDURES AND TREATMENT OF DATA

Using Herrscher's basic model, I designed a Flow Chart for Researching, Developing, Implementing, and Evaluating a Self-Instructional Component on Basic Materials Science as seen in Figure 2, page 20. Norfolk State College, Thomas Nelson Community College, and secondary schools in the Tidewater Virginia area served as the target population for instructional materials developed through this project. Procedures broken into Phases I, II, and III involved developing and validating objectives; structuring the technical education component; developing, implementing, and evaluating a prototype Self-pacing Technical Education Module (STEM) which would serve as model for developing, implementing, and evaluating subsequent elements of the Technical Education Component (TEC).

DEVELOPING AND VALIDATING COMPONENT OBJECTIVES

Systematic instruction builds on instructional objectives. Popham reminds us of the subjective nature of final decisions on objectives because of many possibilities; the wise educator, though, looks at the three major sources specified by Ralph Tyler: the learner, the society, and the subject matter (Popham and Baker, 1970). To determine the dictates of society (in our case, the industrial setting in which our students gain

ORIGINAL PAGE IS
OF POOR QUALITY

FIGURE 2

FLOW CHART
for
RESEARCHING, DEVELOPING, IMPLEMENTING, AND EVALUATING

A SELF-INSTRUCTIONAL COMPONENT ON BASIC MATERIALS SCIENCE

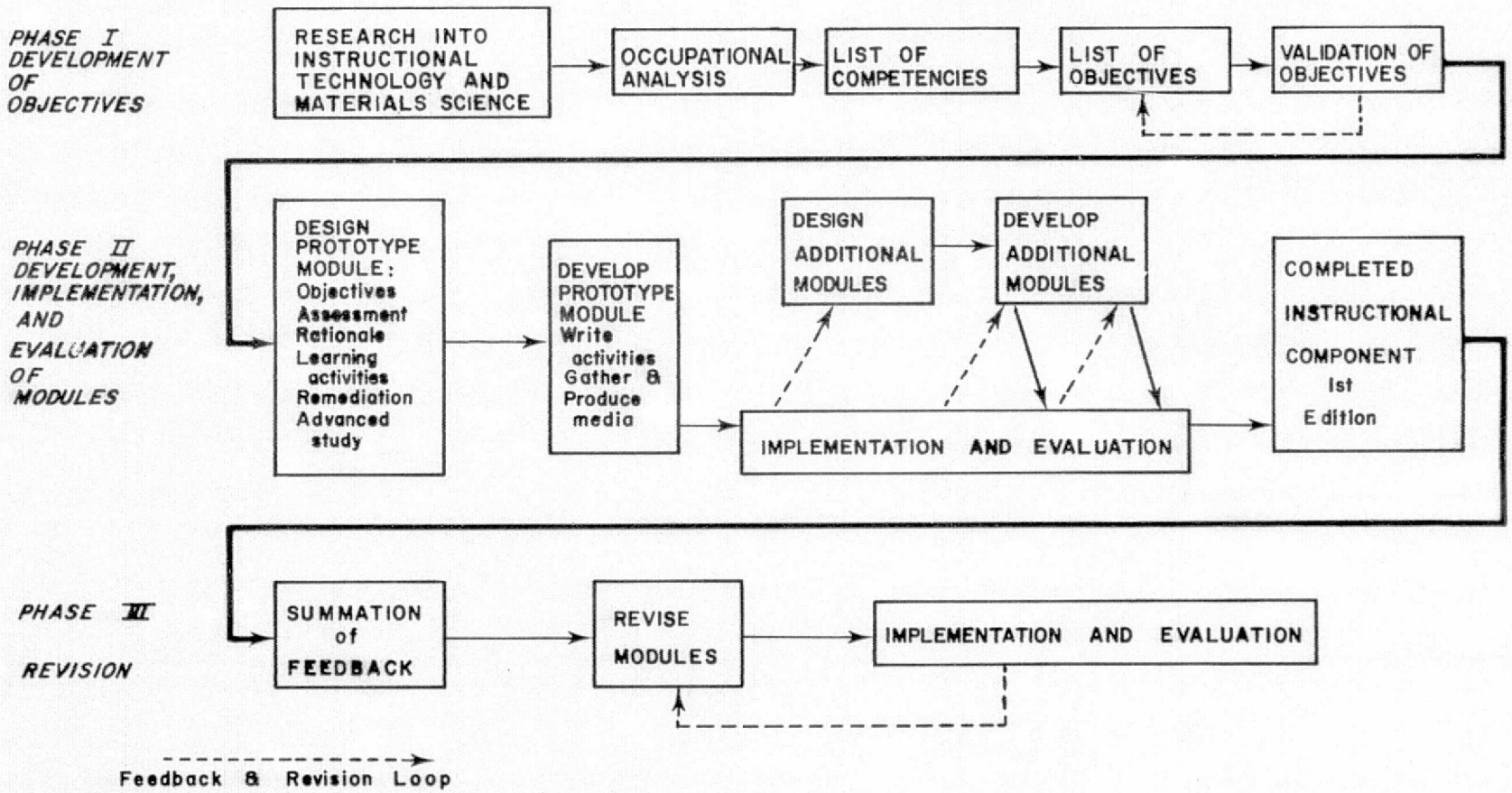

employment), Fryklund and others emphasize utilizing occupational analysis and lay advisory committees (Fryklund, 1970; Criteria for Technical Education: A Suggested Guide, 1968; Barlow, 1965; Burt, 1967; Carlson, 1967; Johnson and Grafsky, 1973). Baldwin (1971: 857-69) and others stress need for including objectives in all domains of the educational taxonomy.

We developed and validated thoroughly objectives for this instructional component on basic materials science for this project. The procedures included study of textbooks and curricula guides, search of Research in Education, update of previous occupational analysis (J. Jacobs, 1969), examination of other occupational analysis (State of Washington Coordinating Council for Occupational Education, 1970), and an extensive Nova practicum in which twelve researching engineers and technicians from the National Aeronautics and Space Administration's Langley Research Center assisted in teaching, developing, and validating objectives, and in developing evaluation instruments for the course in industrial materials and processes of industry at Norfolk State College (J. Jacobs, 1974a).

STRUCTURING THE TECHNICAL EDUCATION COMPONENT (TEC)

Following those instructional models mentioned in Chapter 1, we developed an organization for our study of basic materials science. As seen in Figure 3, Organization of TEC (page 22), the entire topic comprises a component--a course or major unit of study which fits into a total curriculum or program of study so that a curriculum consists of many components. Units labeled

FIGURE 3
ORGANIZATION OF TEC

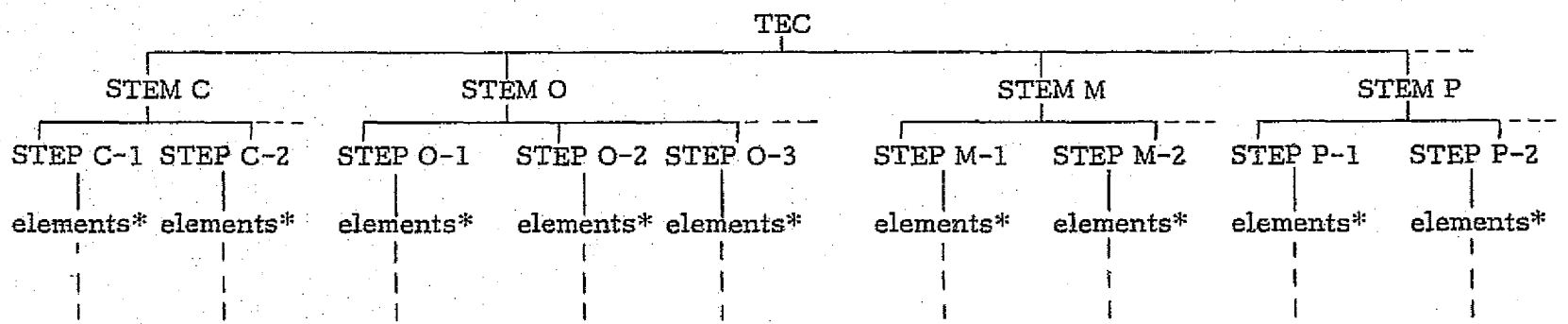

*Elements of each STEP: Rationale, Objectives, Learning Activities (programmed instruction, self-tests, laboratory activities, classroom exercises, library exercises), References, Resources , Alternate Learning Paths

--- STEM's, STEP's, other elements added as required.

as Self-pacing Technical Education Modules (STEM's) form this Technical Education Component (TEC) on basic industrial materials technology. The STEM design provides a means of developing modules which stand alone or function together as a component. So, while modules developed in the project primarily form a component for engineering technology curricula at the college level, their self-containment permits individual use in college or high school courses. For example, the STEM on plastics meets needs in a high school chemistry class for studying polymers. The STEM's consist of discrete learning packages labeled Self-pacing Technical Education Packages (STEP's) with pre- and post-assessments to provide students with frequent feedback. Thus the student recognizes topic mastery before proceeding to the next topic (STEP). Appendix A, pages 74-82, contains representative STEP pages. As Figure 3 (page 22) shows, each STEP consists of (1) a rationale to explain the importance of the STEP's to the student and to motivate the student to study it; (2) objectives which precisely delineate to student in behavioral terms the material to master for evaluation in post-assessment; (3) learning alternatives which allow students several ways to master the objectives; and (4) learning activities to meet objectives, consisting of programmed instruction, self-tests, laboratory activities, classroom activities, library exercises, references for further study, and other multi-media resources. As with the STEM, the STEP design makes it part of the entire TEC on materials science or provides for its independent placement into other courses of study.

PROTOTYPE STEM

With completion of Phase I, Kilduff and I decided to develop our prototype module on plastics. Several factors made plastics appropriate for our trial module: (1) our dissatisfaction with the treatment of plastics in most materials and processes texts; (2) increased industrial applications of this engineering material; (3) the challenge of turning this complex topic into learnable concepts for our target audiences; (4) feeling that students would be enthused with the flexibility of plastics as an engineering material; and (5) because plastics reflect space-age advances in materials science.

Developing STEM

Kilduff and I shared responsibility for developing all materials by selecting segments for which each of us assumed the primary responsibility. On the prototype, Kilduff took responsibility for STEP P-1, "Polymerization of Plastics;" I developed the STEP P-2, "Properties of Plastics," and the slide/tape presentation, "Plastics - A Space Age Material." We each checked with NASA's Langley Research Center technicians and engineers to aid in validating material; Kilduff read thoroughly and assessed all material I developed; and, likewise, I assessed his material. We employed Linda Unseth to proofread materials already scrutinized by Kilduff and me. Finally, Carolyn Weaver proofed material as she typed it. Testing the draft copy involved several students who supplied us with feedback on readability and practicality of learning activities. The feedback helped us revise the printer's copy.

A decision to use two-inch by two-inch slides and cassette audio tape for a short introduction to plastics resulted from an investigation that concluded:

1. production of two-inch by two-inch slides appeared the most practical solution since we lacked audio-visual support other than drafting materials, a typewriter, camera, and photocopy stand;
2. two-inch by two-inch slides permitted economical production and allowed copying of photographs, charts, listings, and other slides, in addition to slides of people in their natural settings;
3. even with greater expense of duplicating two-inch by two-inch slides, production of filmstrip required special equipment unavailable to us;
4. audio tape production was convenient and cost little;
5. an informal survey of local high schools, advice from the educational officer with the National Aeronautics and Space Administration (NASA), and past experience revealed availability of slide projectors and audio tape players to practically everyone in the target group;
6. audible advance signals on the tape allowed use of slide/tape without special synchronizing appartus.

We put considerable effort into collecting as many resources as possible to make such material available to field sites involved in the project. The sheets, "Elements of the STEM on Plastics" and "Instructor's Resources on

Plastics," in Appendix A, pages 83-84, lists all of the materials collected for the STEM. Most of the material came free or inexpensively from industry, professional societies, and governmental agencies.

Implementing and Evaluating STEM

Prior to placing the module into the field test sites, we conducted a workshop which involved specialists from the Industrial Arts Section of the Virginia State Department of Education, industrial arts supervisors and teachers from the six school districts surrounding Langley Research Center, engineers and educational officers from Langley Research Center, and faculty from Norfolk State College and Thomas Nelson Community College (see Appendix A, pages 85-87, for the agenda and information sheets). The workshop served to familiarize the educators with the objectives of this research project and to instruct them on the use of the module on plastics. Secondary schools in Chesapeake, Hampton, Newport News, Norfolk, Portsmouth, and Virginia Beach were used as field sites in addition to Norfolk State College and Thomas Nelson Community College.

The implementation and validation of the prototype had objectives to determine the effectiveness of the instructional system and provide input for development of further modules. At the secondary level, the module served as a supplementary resource that provided each teacher liberty to use the material as the person so desired. Evaluation data served as feedback for improving the entire TEC in developing the remaining STEM's. Our approach to evaluation followed Sorenson's (1971: 1-5) thesis which built on Lee J. Cronbach's view:

> . . . it would be more useful to direct the evaluation effort to improving a particular instructional program--this is, to take the "formative evaluation" tack--rather than merely to answer the question whether or not the program produced statistically significant differences in amounts of learning between students taught by that particular method and those who received either no teaching or were taught by another method.

The evaluation (see Figure 2, page 20) supplied information from teachers and students to aid in our developing the remaining STEM's. The developmental nature of the project required our evaluative efforts to concentrate on each comment from students and teachers rather than trying to generalize on the most frequent responses.

Teachers expressed enthusiasm about the module. They said students enjoyed the slide/sound presentation and the activities with the plastics, but they were not as enthusiastic about the reading matter; only a minority of those students who worked with the module completed the reading and took the post-tests. Of 137 students involved in the project, 31 took post-tests covering the written material; of those 31, 23 mastered the objectives of the module by scoring at least 80 percent on the post-tests. Students who did not achieve mastery the first time through could choose to continue recycling through the self-pacing material until they mastered the objectives. Teachers who used the modules during the four-month testing period (see evaluation form in Appendix A, page 88) rated the materials either four or five on a five-point rating scale; five was excellent. All teachers rated the module as a valuable supplementary aid to instruction. Specific comments from teachers on strong points and weak points of the module appear in Table I, pages 28-29.

TABLE I
SECONDARY SCHOOL TEACHERS' COMMENTS ON PLASTICS MODULE

1. What strong points do you find with this STEP*?

- reading level appropriate even though level of vocabulary was necessarily high to meet the terms required
- structure with program maintains interest
- definitely interested in continued use
- slide presentation very useful in creating interest as evident by number of volunteers
- simplicity of presentation
- allows students to pursue their interest beyond the present curriculum
- motivated students to pursue careers in technology, e. g., application to NASA apprentice program
- individualization & technical assistance
- use of chemical & materials science which is beyond the normal material "fluff & buff"
- glossary
- developing specific terminology
- slide/tape strong
- taught new information on plastics & how to work into class
- brings the study of plastics into perspective

2. What weak points do you find with this STEP?

- some humor (especially slide presentation)
- some reading too difficult for slower students; however, they can move at their own pace & get general picture
- more experiments should be included
- quite technical but depends on student's level
- needs more "hands-on" activities
- level more at upper level of reading for the students in this I.A. program, e. g., terms such as polymer scare students

3. How did you use this STEP with your classes?

- with one entire class & students in other classes; used a wide range of students (slow, average, & fast)
- used volunteers from classes
- partially utilized and adapted to my own objectives
- individually on a volunteer basis
- went to class on voluntary basis with grade incentive; lack of classroom made discussion difficult

* Self-pacing Technical Education Package

TABLE I (cont'd)

4. How would you generalize student reaction to this STEP?

- good; did not pressure the students to use it, and about 75% of those who had the material read it
- very favorable to very low interest; some students interested only in experiments
- good
- those who could read enjoyed it; however, those who were better students (motivated) are into many conflicting activities
- better students were very enthusiastic especially with practical applications
- slower students had problems with terms

5. What improvements would you suggest for this STEP?

- professional narration needed on tape (not that bad; on scale of 10, would give 7)
- would like materials & equipment to work with
- more experiments
- more labs & activities
- conservation & pollution section should be added
- lower reading level
- more activities & experiments at beginning
- simplify
- orient slide/tape program with short text after visual presentation, such as five questions after film

6. Other comments that will aid in the evaluation & improvement of this STEP:

- a class devoted exclusively to materials would allow better evaluation
- it has potential and the general structure is very suitable to I.A.
- range of slides to show all the ways plastics were used created interest (e. g., comments - "gee, I didn't know there was that much plastic in a car")

Evaluation of the module by those secondary school students proved quite favorable, with a clear majority rating the material average or above in (1) its ability to teach, (2) clarification of objectives, (3) developing technical vocabulary, (4) usefulness of exercises, (5) comparison to textbooks, and (6) overall rating. (See Table II, page 31, for summary of student comments.)

At Norfolk State College, a predominantly black institution, testing the prototype module on plastics involved a freshman class of industrial materials. The class of 35 students received the module in the middle of the course. It served as individualized instruction on the topic of plastics which I normally teach in a traditional mode. Student response (obtained from Student Evaluation Instrument in Appendix A, page 89) to the module was very favorable (see Tables IIIa and IIIb, pages 32-33). The histogram in Table IV (page 34) compares grade distributions for a prior unit test to two post-tests on the plastics module. The dramatic improvement in grades for the module tests over the previous unit test probably resulted from a variety of factors; but judging from student responses, the design of the module provided students opportunity to move at their own pace with frequent feedback, thus improving their chances of mastering the module's objectives. Additionally, the students had the option to recycle through learning packages until they mastered a module's objectives; six students recycled through the package to attain mastery on the post-test.

TABLE II
SUMMATION OF SECONDARY SCHOOL STUDENTS'
EVALUATION OF PLASTICS MODULE

1. HOW WOULD YOU RATE THE ABILITY OF THIS STEP TO TEACH YOU?

POOR 1	2	AVERAGE 3	4	EXCELLENT 5
0%	7%	47%	42%	3%

2. WERE THE OBJECTIVES OR REASONS FOR STUDYING THIS STEP CLEAR TO YOU?

UNCLEAR 1	2	FAIRLY CLEAR 3	4	VERY CLEAR 5
0%	10%	45%	22%	21%

3. WERE THE TECHNICAL WORDS WELL EXPLAINED?

POOR 1	2	AVERAGE 3	4	EXCELLENT 5
0%	14%	40%	29%	15%

4. WERE THE EXERCISES USEFUL IN UNDERSTANDING THIS SUBJECT?

POOR 1	2	AVERAGE 3	4	EXCELLENT 5
1%	8%	40%	29%	19%

5. HOW WOULD YOU COMPARE THIS TYPE OF TEACHING MATERIAL TO REGULAR TEXTBOOKS?

WORSE 1	2	SAME 3	4	BETTER 5
8%	12%	17%	19%	42%

6. CHECK THE STATEMENT WHICH BEST DESCRIBES THE WAY THE ENTIRE STEP WAS WRITTEN.

1%	TOO MUCH JARGON	3%	POORLY WRITTEN
32%	WELL WRITTEN	30%	CONCISE & TO THE POINT
13%	CONFUSING	18%	OTHER

TABLE IIIa
SUMMATION OF NORFOLK STATE COLLEGE STUDENTS' RESPONSES
FOR STEP P-1 (POLYMERIZATION OF PLASTICS)

1. HOW WOULD YOU RATE THE ABILITY OF THIS STEP TO TEACH YOU?

POOR 1	2	AVERAGE 3	4	EXCELLENT 5
0%	3.4%	27.6%	34.5%	34.5%

2. WERE THE OBJECTIVES OR REASONS FOR STUDYING THIS STEP CLEAR TO YOU?

UNCLEAR 1	2	FAIRLY CLEAR 3	4	VERY CLEAR 5
0%	3.6%	21.4%	39.3%	35.7%

3. WERE THE TECHNICAL WORDS WELL EXPLAINED?

POOR 1	2	AVERAGE 3	4	EXCELLENT 5
3.4%	3.4%	13.8%	34.5%	44.8%

4. WERE THE EXERCISES USEFUL IN UNDERSTANDING THIS SUBJECT?

POOR 1	2	AVERAGE 3	4	EXCELLENT 5
0%	7.1%	21.4%	39.3%	32.1%

5. HOW WOULD YOU COMPARE THIS TYPE OF TEACHING MATERIAL TO REGULAR TEXTBOOKS?

WORSE 1	2	SAME 3	4	BETTER 5
0%	3.4%	17.2%	24.1%	55.2%

6. CHECK THE STATEMENT WHICH BEST DESCRIBES THE WAY THE ENTIRE STEP WAS WRITTEN.

3.7% TOO MUCH JARGON	3.7% POORLY WRITTEN
40.7% WELL WRITTEN	40.7% CONCISE & TO THE POINT
3.7% CONFUSING	7.4% OTHER

TABLE IIIb
SUMMATION OF NORFOLK STATE COLLEGE STUDENTS' RESPONSES
FOR STEP P-2 (PROPERTIES OF PLASTICS)

1. HOW WOULD YOU RATE THE ABILITY OF THIS STEP TO TEACH YOU?

POOR 1	2	AVERAGE 3	4	EXCELLENT 5
0%	3%	15.2%	63.6%	18.2%

2. WERE THE OBJECTIVES OR REASONS FOR STUDYING THIS STEP CLEAR TO YOU?

UNCLEAR 1	2	FAIRLY CLEAR 3	4	VERY CLEAR 5
0%	6.3%	15.6%	40.6%	37.5%

3. WERE THE TECHNICAL WORDS WELL EXPLAINED?

POOR 1	2	AVERAGE 3	4	EXCELLENT 5
0%	0%	25.8%	35.5%	38.7%

4. WERE THE EXERCISES USEFUL IN UNDERSTANDING THIS SUBJECT?

POOR 1	2	AVERAGE 3	4	EXCELLENT 5
0%	5.7%	25.7%	37.1%	31.5%

5. HOW WOULD YOU COMPARE THIS TYPE OF TEACHING MATERIAL TO REGULAR TEXTBOOKS?

WORSE 1	2	SAME 3	4	BETTER 5
3.1%	0%	12.5%	28.1%	56.3%

6. CHECK THE STATEMENT WHICH BEST DESCRIBES THE WAY THE ENTIRE STEP WAS WRITTEN.

0%	TOO MUCH JARGON	3%	POORLY WRITTEN
37%	WELL WRITTEN	58%	CONCISE & TO THE POINT
0%	CONFUSING	0%	OTHER

TABLE IV
COMPARISON OF SCORES ON PREVIOUS UNIT TEST
WITH SCORES ON PLASTICS MODULE'S POST-TESTS
FOR STUDENTS AT NORFOLK STATE COLLEGE

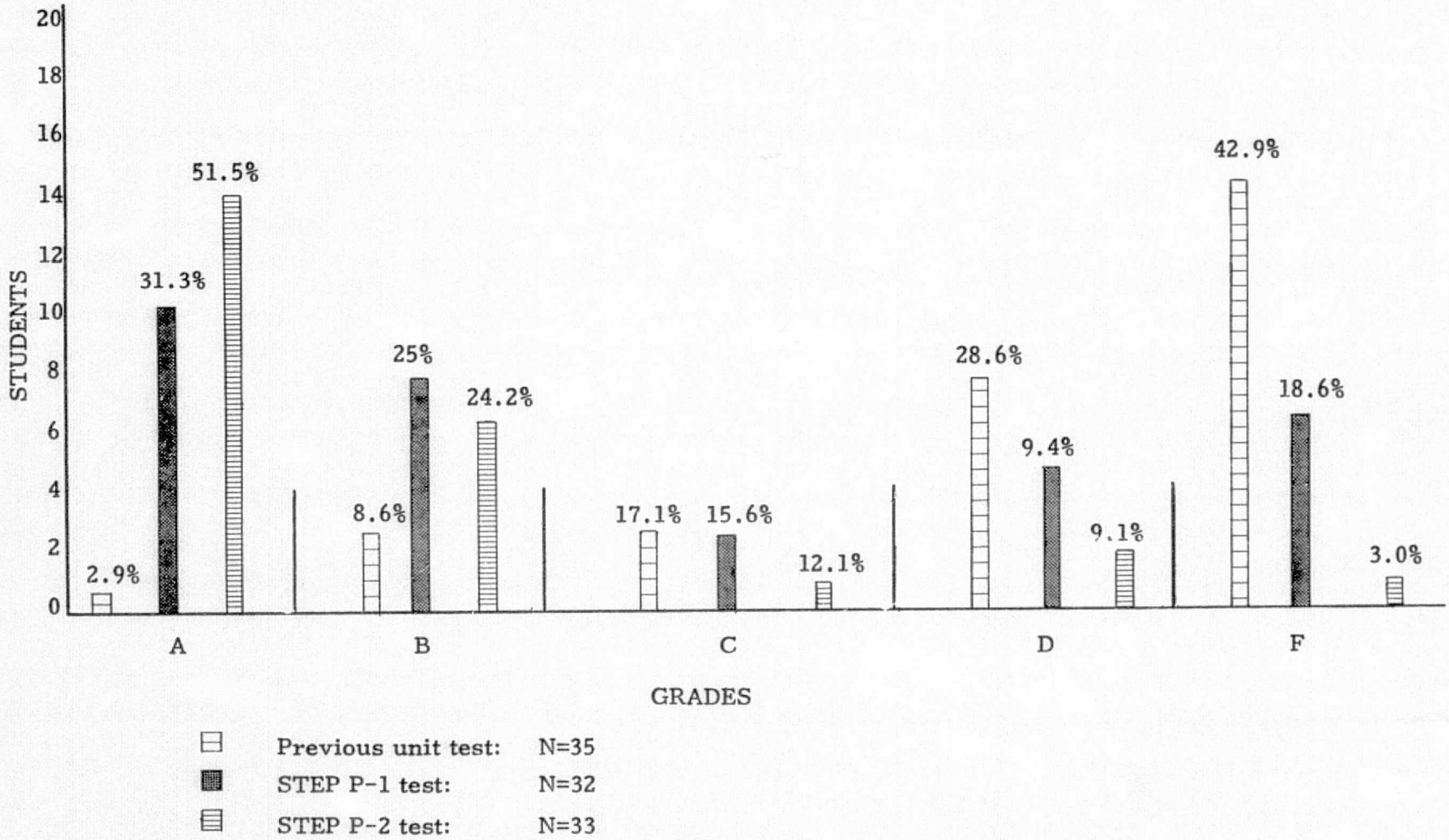

Conclusions from Prototype Evaluation

Field testing the prototype module on plastics supported the design of this instructional system on basic materials science. The feedback from field sites indicated the following improvements needed for subsequent STEM's:

1. maintain prototype level of instruction (even though the reading level seemed appropriate for most of the students in our college and secondary school audiences, many concepts required a high degree of motivation for a secondary school student to pursue topics only on a special-interest basis--materials technology is not a part of their regular course of study; therefore, the STEM's should allow secondary school instructors to read the STEP's and select those concepts and activities which they consider appropriate for their classes or individuals in their classes);
2. improve voice for tape narration;
3. include feedback/evaluation mechanisms into slide/sound presentation;
4. include more hands-on activities;
5. include short self-tests at appropriate intervals with the answers at the end of the STEP.

Students and instructors reacted enthusiastically to the nature and design of the module.

COMPLETING TEC

With the prototype STEM in the implementation and evaluation phase (Figure 2, page 20), we started collecting material and designing subsequent STEM's. As feedback came in, we incorporated it into the design when appropriate.

Developing TEC

Procedure for developing the remaining STEM's followed closely the development of the prototype. To insure that we covered properly essential elements in each STEP, a check list with the items shown below served as guide:

1. objectives (are they balanced, i.e., various levels of cognitive and affective?);
2. ample feedback (questions/activity) to cover each objective;
3. self-test questions(s) for each objective;
4. pretest/post-test question(s) for each objective.

The STEM on careers exemplifies strategies used on the remaining module plus some special efforts required because of its unique nature. This STEM required more attention because it provided the vehicle to inform students, educators and the general public of careers in engineering technology--and we intend for this STEM to become a prime communique for counselors' and teachers' career education efforts in engineering technology.

To gather the content for this instructional package on careers in mechanical engineering technology, we used several approaches: (1) written correspondence with industrial, governmental, and professional agencies; (2) review of appropriate literature; (3) visitations and phone conversations with engineering agencies; and (4) use of my past experience with career education.

The last approach provided some clues as to how to attack a program for developing career awareness. This experience included a Nova University practicum published by ERIC (J. Jacobs, 1975), teaching a course in career education, and recruiting and orientation programs in engineering technology.

Because of the demand for technicians, industry and government try to develop interest in young people to pursue such careers. With this knowledge, I wrote to the following organizations requesting brochures, slides, photos, posters, or other material that they have on technical careers:

General Electric Company
General Motors Corporation
Ford Motor Company
Kodak Company
Reynolds Metal
United Engineers
American Iron and Steel Institute
American Society of Metals
E. I. Dupont Company
J. J. Henry Corporation
Aluminum Association
American Society for Engineering Education
Engineers Council for Professional Development
Tenneco - Newport News Shipbuilding and Drydock Division

Selection of these particular organizations came as a result of their cooperation in my past endeavors or from listings of their materials in the literature. The results of the letter proved to be quite successful. After a second request, booklets from General Electric, General Motors, American

Society of Metals, and Engineers Council for Professional Development were sent in sufficient quantity so as to supply the high schools in the local area. The Aluminum Association also sent the filmstrip/tape presentation and brochures in large quantities. Copies of "Employment Outlook for Technician Occupations," a reprint from the Occupational Outlook Handbook - 1974-75 edition, were purchased from the U. S. Department of Labor in sufficient quantities to supply local high schools.

The greatest contribution to the slides came from NASA's Langley Research Center in Hampton, Virginia, with support of the public affairs and educational programs officer. Through numerous visitations to the research center, I took pictures of technicians in many settings. The nature of the center's activities makes it possible to obtain scenes of many types of work, while showing minorities, females, and people of all age groups engaged in engineering activities. Additionally, they furnished photographs and other graphical materials suitable for photocopying for slides. Also, the NASA personnel served to validate the slide/tape presentation.

Through phone conversations with engineers at Tenneco's Newport News Shipbuilding and Drydock Corporation, I obtained two-inch by two-inch slides. I selected enough slides on the design aspects of mechanical technology to achieve a very effective phase of the presentation. Their professional graphical displays, far beyond the capabilities of Norfolk State College, proved valuable in constructing the instructional package.

Final Report of Engineering Technology Education Study (American Society for Engineering Education, 1972), Manpower Research Bulletins (U. S., Department of Labor, 1966), Career Opportunities: Engineering Technician (1969), and Encyclopedia of Careers (1972) provided useful data on the education, training, and careers of engineering technicians. The data was integrated into the narration for the slide/tape presentation and also used in the booklet, STEP C-1 (see Appendix B, pages 91-99, for figures on the Engineering Team, Mechanical Engineering Technology, Education as Related to Nature of Work, and Career Lattice).

With the script for the tape written and the slides selected, we made an initial recording of the tape. Insertion of question slides to cover key points provided student involvement. Answer slides followed the question slides with discussion of the answers. The answer slides provided instant feedback to the student to reinforce the previous instruction.

The first edition of the slide/tape presentation received evaluation from specialists in educational technology, engineers, and two classes of students at Norfolk State College. It received two major revisions to shorten and improve tape and slide quality.

Appendix B, pages 95-100, contains sheets for each of the four STEM's that comprise this TEC. The sheets list all STEP's developed plus the Instructor's Guide furnished in the STEM's.

We packaged the contents of each of the four STEM's in large cardboard boxes and labeled them as either Career Awareness Kits or Career Exploration Kits (see Appendix B, page 102).

To provide more activities, we designed and borrowed ideas for experimental devices. Construction of sufficient quantities permitted us to supply each of our target school districts with one device, and plans for construction included in the STEP's (see Appendix B, pages 103-106) made it possible for any user of the TEC to construct his own.

Implementing the TEC

According to our plans (Figure 2, page 20), the implementation of STEP's followed their completion, thus supplying feedback for developing subsequent materials. We implemented the materials at Norfolk State College, Thomas Nelson Community College, and secondary schools in the Tidewater Virginia area.

Implementing at Norfolk State College. The most extensive use of this TEC involved implementing it at Norfolk State College. The materials served as primary instruction for a two-semester-hour course, TEC 145, Materials and Processes of Industry I. Two sections of TEC 145 taught in the fall semester of 1975 had 27 students in section one and 16 students in section two. The mostly freshman classes consisted of mechanical design and electronics technology majors and education students from the industrial arts and industrial education curricula. The requirement for having STEP's ready in time for use by the class put tremendous pressure on Kilduff and me to complete the writing with a minimum of a month lead time for proofing and printing. The pressure made us appreciate advice of other developers who had suggested not implementing individualized

instruction while trying to develop it.

Using an individualized instructional mode, I taught both sections of the course. The grant from NASA for this project provided me with three-fourths release time for directing the grant and serving as senior researcher; the remaining one-fourth time covered the two sections. As a first experience in teaching a completely individualized course, it became an arduous task, much more demanding than the traditional lecture/discussion mode of teaching. As seen in the Course Requirements in the Appendix B, page 107, the operation of class involved students reading through the STEP's at their individual paces with only three lectures given the entire semester; lectures served to explain the classroom procedure and provide motivation. In addition to the STEP's and slide/tapes from the TEC, I showed seven films from industry to provide the students a realistic look at industry and a look at materials undergoing microscopic examination and testing with equipment unavailable at Norfolk State College. Both sections took a full-day field trip to NASA's Langley Research Center midway through the course to witness the testing and processing of materials with the latest techniques.

Implementing at Thomas Nelson Community College. Implementation of the TEC as a supplementary resource at Thomas Nelson Community College began with the winter quarter (January, 1976); consequently, the results of its effectiveness at TNCC will not appear in this report.

Implementing in Secondary Schools. Field testing of the prototype STEM indicated an interest by secondary school teachers for our materials as a supplemental resource. Since one of our primary objectives aimed at

informing secondary school students, counselors, and teachers of careers in engineering technology, with hopes of motivating students to pursue careers as engineering technicians and technologists through college and apprenticeship programs, we chose methods of disseminating our TEC to yield the largest audience. Our methods included workshops and a TV series.

Counselors' Workshop. Design of the first workshop had the objective of gaining the interest of area guidance counselors in the STEM on careers which we labeled, "A Career Awareness Kit: Careers in Engineering Technology" (see Appendix B, page 98). As seen by the agenda in Appendix B, page 108, the Virginia Board of Education's Supervisor of Guidance and Norfolk State College's Director of Counseling spoke about career counseling to the workshop audience. Representatives from NASA's Langley Research Center and Newport News Shipbuilding described the engineering technology occupations. Finally, Kilduff and I gave the rationale and methods for using the career awareness kit. Invitations went to all guidance counselors and supervisors from the school districts and colleges listed below:

Chesapeake	Hampton
Newport News	Norfolk
Portsmouth	Virginia Beach
York County	Suffolk
Tidewater Community College	Thomas Nelson Community College

Other parties suggested by NASA's Langley Research Center's educational programs officer, Harold Mehrens, received invitations. All participants received a copy of STEP C-1, copies were sent to each secondary school, and the district and state guidance supervisors received the complete

Career Awareness Kit with our request to rotate it through the schools.

Televised Program. Even though representatives from all invited districts and colleges attended, conflicting activities prevented many counselors from participating in the workshop. In anticipation of many counselors' inability to attend and because of urging from the guidance directors, we arranged for two 30-minute TV programs to be taped by WHRO, the local educational television station. The programs played several times following the workshop with some schools making their own tape (Appendix B, page 109, Program Schedule and Capsulation).

Industrial/Technical Educators' Workshop. Since one of our major objectives included providing secondary school industrial arts and vocational educators with readily usable resources on basic materials science, we held a second workshop to disseminate our TEC to educators in the area school districts. This workshop utilized Paul W. DeVore, a noted industrial/technical educator, to lead participants in activities to assist them in implementing individualized instruction. Next, Kilduff and I explained the rationale and use of the TEC. (See Appendix B, page 110, for the workshop agenda.) Each high school and junior high school in the districts received copies of each STEP in the TEC and sheets describing the Career Awareness and Career Exploration Kits (Appendix B, pages 95-98). Supervisors of industrial education from the districts plus the state supervisor received each of the Career Exploration Kits with our request that the kits be made available to the schools through the districts' central audio-visual supply systems.

Evaluating the TEC.

As a developmental project, evaluation efforts sought maximum feedback from our constituencies; namely, industrial and governmental engineering agencies, and technical educators and students at the college and secondary levels. Evaluation of the first edition of this TEC provides data to aid in improving the material for subsequent use by students at Norfolk State College, Thomas Nelson Community College, and others who choose to use it.

Jurors. Occupational/technical curricula must teach valid concepts because colleges become immediately accountable as soon as their graduates go to work. Consequently, we selected an evaluation jury to represent industry, government, technical education, educational development, educational publishers, and guidance. As seen by the Table V, Jurors, page 45, the industrial and governmental specialists matched the STEP they evaluated, e.g., Norman Johnston, as a polymer chemist, and Robert Baucom, as a polymer and composite materials engineer, evaluated the two STEP's on plastics (polymers). The educational development specialist, Barton Herrscher, evaluated all STEP's from a curriculum specialist's and editor's viewpoint. Technical educators viewed all STEP's in regard to their viewpoints as college or secondary school educators, and counselors evaluated the STEM on careers. The jurors evaluated only the portions of STEM's or STEP's within their specialties, e.g., Kirkman did not comment on the accuracy of information in the STEP's because he lacks experience in materials science.

TABLE V
JURORS

NAME	FIRM	POSITION/YEARS EXPERIENCE
Bland A. Stein, ABD	NASA - LRC	Asst. Head, Material Research - Metallurgist Engineer/19 years
Robert Baucom, M.S.	NASA - LRC	Structures Directorate - Materials Engineer/13 years
Norman Johnston, Ph. D.	NASA - LRC	Polymer Chemist
Samuel Scott	NASA - LRC	Asst. to Director - Structures Aeronautical Engineer
Wayne Wright	NASA - LRC	Engineering Technician
Harold Mehrens*	NASA - LRC	Educational Programs Officer
Daniel Miller	NASA - LRC	Asst. Educational Programs Officer
B. L. Skeens, BSME	Newport News Shipbuilding	Chief Design Engineer/22 years
K. K. Plumming	Newport News Shipbuilding	Mechanical Designer
S. A. Tatum	Newport News Shipbuilding	Mechanical Designer
David B. Motley	Newport News Shipbuilding	Mechanical Designer
William H. Briggs	Newport News Shipbuilding	Mechanical Designer
Benjamin T. Smith	Newport News Shipbuilding	Mechanical Designer
Ralph Kirkman, Ph. D.	Peabody College	Professor of Higher Education/21 years
	Peabody Journal	Editor
Barton Herrscher, Ph. D.	Center for Educational Development	Consultant
	Nova University	National Lecturer
Arvid Van Dyke, Ed. D.	Virginia Board of Education	Industrial Arts Curricula Specialist
	Virginia State College	Assoc. Professor/16 years
Elizabeth Morgan, Ed. D.	Norfolk State College	Director of Counseling/16 years
Rita J. Holthouse, Ph. D.	Norfolk Public Schools	Director of Guidance
Richard Peters, Ed. D.	Thomas Nelson Community College	Director of Learning Resources
John Moore, M. Ed.	John Tyler Community College	Chairman, Div. of Engineering Tech.
Stephen Schilling, M.S.	John Tyler Community College	Asst. Professor of Mechanical Tech.
Dave Goin, M. Ed.	Eastern New Mexico University	Assoc. Professor of Industrial Arts

*Grant Technical Officer

Jurors used the evaluation form shown in Appendix B, page 111, with the option to include criteria of their own design. Herrscher evaluated the STEP's with his "Instructional Effectiveness Inventory."

Students. Three approaches to evaluation involving Norfolk State College students included pre/post-tests over STEP objectives; student reaction to each STEP (Appendix A, page 89) and to the entire course (Appendix B, page 129); and a statistical analysis (z test) of students in TEC 145 who received individualized instruction with materials from this project compared to previous students at Norfolk State College who took Materials and Processes of Industry I with the traditional mode. The ultimate goal in developing this TEC aims for at least 70 percent of the Norfolk State College students expressing their interest in continued studies in engineering technology and at least 80 percent of the students achieving the cognitive objectives of the instructional component. Pursuit of these goals follows Phase III for Figure 2, page 20, in which data from students and other users remains in a constant feedback/revision loop.

Users. The User's Evaluation Form (Appendix B, page 101) provides a vehicle for all users of this TEC to supply data on the methods of use and recommendations for change. We encouraged all participants in the two workshops on our TEC, plus others given the Career Awareness and Exploration Kits, to mail us their evaluations on the User's Evaluation Form.

Chapter 4

FINDINGS

Data gathered from the various sources involved in evaluating this TEC serves as input to improve this prototype instructional system. As rationalized in Chapters 2 and 3, constituencies associated with Norfolk State College, Thomas Nelson Community College, and technical education provided the input.

JURY

Data compiled from the Jury's Evaluation Form comprises Table VI (page 48). As the table shows, most jurors rated the objectives appropriate and the information accurate at a high level. In addition to validating the STEP's, each juror supplied valuable comments for subsequent improvement of those STEP's they evaluated (see Table VII, pages 49-50). Jurors' typical candid comments reflect our constituencies' interest throughout this project. From his view as a curriculum development theorist, Barton Herrscher, whose model served as the basis for this TEC, said ". . . your materials are of the highest quality I've seen. . .". He suggested we pursue publishing possibilities.

Jurors also provided valuable assistance in critiquing the slide/tape presentation on careers, as evidenced in the third edition of the presentation.

TABLE VI
JURORS EVALUATION OF STEP'S

STEP	Question	Very much* Accurate** 1	2	3	4	Inappropriate* Inaccurate** 5	Blank
C-1	1*	58%	25%	17%	0%	0%	0%
	2**	75%	0%	8%	0%	0%	17%
O-1	1*	44%	56%	0%	0%	0%	0%
	2**	66%	22%	0%	0%	0%	11%
O-2	1*	44%	56%	0%	0%	0%	0%
	2**	56%	11%	22%	0%	0%	11%
O-3	1*	22%	67%	0%	0%	0%	11%
	2**	33%	11%	22%	0%	0%	33%
P-1	1*	71%	29%	0%	0%	0%	0%
	2**	57%	14%	0%	0%	0%	29%
P-2	1*	71%	29%	0%	0%	0%	0%
	2**	57%	14%	0%	0%	0%	29%
M-1	1*	57%	43%	0%	0%	0%	0%
	2**	57%	14%	0%	0%	0%	29%
ALL STEP'S	1*	53%	42%	3%	0%	0%	2%
	2**	58%	12%	8%	0%	0%	22%

No. of evaluations = 111
Mean evaluation = 1.42

* 1. Are the objectives appropriate?

** 2. Is the information accurate?

TABLE VII
TYPICAL JURORS' COMMENTS

1. Are the objectives appropriate?
   - Do pre-test & post-test "match" the objectives? Successful completion of objectives should be reflected in the test.
   - Feel the objectives were very well met.
   - Your clarity is excellent!

2. Is the information accurate?
   - Since my background of this field is limited, my assessment of accuracy of information would not be valid.

3. What weakness do you find in this STEP?
   - In A, I'm not sure after reading it who is the team. You describe more of what they do and do not list job titles.
   - Page 18 - The statement "technicians & technologists fall in-between with. . ." is an example of the real problem in attracting people to engineering technology education. There is nothing positive here. A better, more positive definition of the technician's and technologists's role is needed here. The following pages are better.
   - If the students are of the level you indicate, I doubt that they will understand some of the terms and suggestions.
   - Do you need lingo style such as in inset paragraph on page 10, i.e., "WOW! SWEAT!, . . . fast conversion to stateside language. . ."? Could turn sharp kids off.
   - Page 1 - the useful magnification of a metallograph is limited to about 2000-2400X; Page 12 - photograph seems out of place; page 13 - crystal is spelled incorrectly in diagram.
   - Excellent for college students; too difficult for high school students.
   - I find no profound weaknesses.
   - Objective 8 is difficult using only the material presented in STEP on ceramics. Key word is "why."
   - Too wordy, especially sections IV A, B, and C. These sections are boring because they use too much explanation to make simple points.

4. What strengths do you find in this STEP?
   - The STEP will be understood by the students using it.
   - Good layout and flow.
   - Clear directions, good figures, and a good tool for screening those interested in the field from those who are not.
   - Concise and orderly presentation of material.
   - Presentation of a difficult unit of material.
   - Use of illustrations excellent.

TABLE VII, TYPICAL JURORS' COMMENTS (continued)

4. What strengths do you find in this STEP? (continued)

Section on polymeric materials.

Good for high school industrial arts or any other students; very good general information.

Simplicity and brevity in the latter sections.

The authors have done an excellent job in presenting the basic principles in plastics chemistry, and the student need not have prior chemistry knowledge.

The approach in general should encourage students by allowing viable options, e.g., page 6 - the "paths."

5. How would you improve this STEP?

The material presented can be expanded to provide additional information when time permits.

One gets the feeling that engineering technology is not a career, just a transient step. This is not true; in years to come, the technologist may be in as much demand as the engineer.

Give serious attention to language levels of students and edit accordingly.

In exploring crystal lattices, the fact that atoms are shared with adjoining crystals should be noted.

Fine as it is for college students.

Something introductory on physical versus mechanical properties would be useful, giving lists of examples of both.

6. Other comments:

I think a Table of Contents would help in seeing the overall plan of the booklet.

An excellent package!

Consider a simplified version for high school students.

Inconsistencies: 1) page 19 calls Young's Modulus the "tensile modulus" while page 22 identifies Young's Modulus as the "modulus of tensile elasticity." Neither is totally correct; 2) the answer to questions 2 and 3 of Self-Test 2 (page 28) are not consistent and the answer to question 2 is technically incorrect (since the number of cycles a typical nail is subjected to when driven in is too few to constitute fatigue. Errors: 1) page 20 - the last sentence of the first paragraph on tension is misleading; tension cannot be exerted on only one end of a wire; 2) the figures on page 23 have the captions reversed; 3) the directions stated for Self-Test 3 on page 39 are not correct for questions 1 through 8.

This STEP should stimulate that person who may desire to pursue the study of plastics chemistry further.

Paul DeVore served as a consultant to provide in-depth evaluation of the entire TEC. His report assessed our STEM's as "well conceived and developed" with "well-structured, easily understood, and manageable teaching-learning packages"; but he felt some in-service training for high school teachers would be necessary (Appendix C, pages 114-120). Through lengthy discussion with Kilduff and me, DeVore made specific critique of each element of the TEC and summarized the comments in his report (see especially his section on recommendations and comments).

STUDENTS

Table VIII (page 52) reveals the student make-up of TEC 145 in the two classes at Norfolk State College and typifies the make-up of previous classes with the exception of one retired man, age 65, and a slight increase in female and Caucasian students--normally around 2 percent of each. Also the status of the students' communications skills closely matched previous classes, with 49 percent enrolled in the T7 through T10 non-credit communication classes to teach high school-level reading and writing skills.

Post-test Results

With the requirement to score 80 percent on post-tests to indicate mastery of STEP objectives, students recycled when necessary through each STEP until they obtained the 80 percent score. Regular scheduling of the first test on each STEP probably contributed to the 30 percent failure rate on

TABLE VIII
STUDENT MAKE-UP OF TEC 145

93% Male	7% Female		18 Modal Age		17-65 Age Range
Major:	48% Electronics Technology		40% Mechanical Technology		12% Industrial Education
89% Black	11% Caucasian	0% Other			
Interested in becoming engineering technician:					
Not interested			Undecided		Very interested
1	2		3	4	5
5%	2%		25%	33%	35%
Amount of education desired before beginning career:					
0% no degree	11% 2-year degree	63% 4-year degree	22% masters degree	4% doctors degree	
Communications class enrolled concurrent with this course:					
23% T7*	17% T8&9*	9% T10*	19% BE11**	19% BE12**	13% Other

N=43

*Developmental - less than college level
**Freshman communications classes

STEP tests (see Table IX, page 54). The adjustment in individualized pacing to force students to prepare for tests on a set date followed advice from experienced users of individualized instruction who found that freedom to test "when ready" caused unhealthy procrastination and resulted in students not completing courses. So, even though the failure rate remained rather constant until the last two tests, the 79 percent proportion of students passing TEC 145 before semester's end nearly brought us to one of the two ultimate goals of this TEC system, i.e., 80 percent of the students mastering 80 percent of cognitive objectives (see Table X, page 55: passing > D grade). This passing rate, compared to 67 percent of previous classes, receives statistical analysis later in this section.

Student Evaluation of STEP's

Students generally gave high evaluation of the STEP's (see Tables XI through XVIII in Appendix C, pages 121-128). Student uncertainty about the teaching ability of STEP's shows on evaluations of early STEP's item 1, even though most rated the quality (items 2-5, 9) of the STEP's in the 4 or 5 category; the rating of STEP's teaching ability improved toward the end of the course except for M-2 which dealt with the most complex subject matter in the TEC.

The most frequent student comments focused on desire to have a laboratory attached to the class and wish for more class discussion. Even though I encouraged class discussion, students seemed to wish for me to lead this discussion, which I feel resulted from their conditioning in lecture classes.

TABLE IX
STEP-BY-STEP RESULTS OF STUDENTS' FAILURE RATE

STEP #	DESCRIPTION	# OF TESTS FAILED	% TESTS FAILED
C-1	Careers in Engineering Technology	23	34%
O-1	Nature of Materials	20	32%
O-2	Family of Materials	15	26%
O-3	Properties of Materials	17	31%
P-1	Polymerization of Plastics	16	30%
P-2	Properties of Plastics	7	15%
M-1	Nature of Metals	1	2%

Total # of Tests Failed: 99
Total # of Tests Attempted: 382
Percent of Tests Failed: 30%
Total Enrollment: 34

TABLE X

GRADE DISTRIBUTION OF STUDENTS TAKING TEC 145:
TRADITIONAL INSTRUCTIONAL MODE COMPARED TO TEC SYSTEM

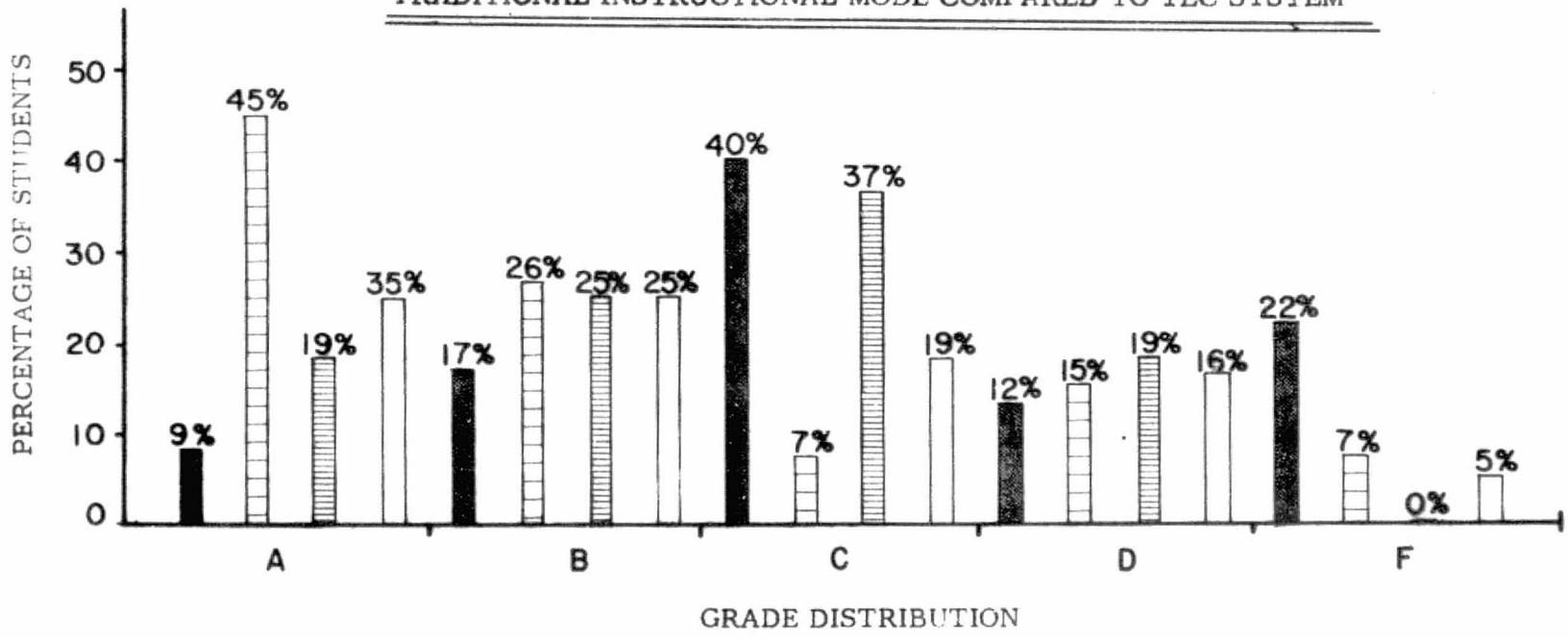

Key:

Previous classes		N=184
TEC Class Section 1		N=27
TEC Class Section 2		N=16
Both TEC Classes		N=43

Student Evaluation of Instructor

When asked to evaluate my teaching on the Student Evaluation of Teaching form (Appendix C, page 129), both classes offered very good grades (see summary, Table XIX, pages 57-58). The high marks in items 1 through 5 indicate rapport developed with the class. The fact that most categories received A-B grading between 62 percent to 90 percent indicates the students found the course worthwhile. Such a response reveals a tendency for the students leaning toward the second ultimate goal of this TEC: at least 70 percent of the students using these materials will express interest for continued studies in engineering technology and thus reflect a desire to achieve the affective objectives of the instructional components. Sixty-eight percent of the students marked a 4 or 5 on a 5-point scale (Table VIII, page 52) when asked if they were interested in becoming engineering technicians.

Analysis of Student Performance

In testing differences in proportions for the students who had previously taken TEC 145 against those studying with the Technical Education Component, I applied the following hypotheses:

H_o: This TEC system produces passing students in the TEC 145 classes at Norfolk State College at a proportion not greater than 65.8 percent.

H_a: This TEC system produces passing students in the TEC 145 classes at Norfolk State College at a proportion greater than 65.8 percent.

Criterion for decision: Use a level of confidence at 0.05 to reject H_o and accept H_a if z is greater than 1.645.

TABLE XIX
SUMMATION OF STUDENT EVALUATION OF TEACHING

	A	B	C	D	F	BLANK
1. Does your instructor seem to enjoy teaching your class?	38%	40%	18%	4%	0%	0%
2. Does your instructor appear to know his subject matter?	73%	20%	5%	0%	0%	2%
3. Does your instructor seem enthusiastic about teaching?	38%	35%	25%	0%	2%	0%
4. Is your instructor concerned about your learning?	45%	48%	7%	0%	0%	0%
5. Does your instructor seem concerned about the feelings of the students in your class?	21%	46%	33%	0%	0%	0%
6. Is the class time well used?	36%	36%	19%	2%	0%	7%
7. Are the tests given by your instructor consistent with class presentations or objectives?	68%	22%	5%	5%	0%	0%
8. Do you look forward to coming to this class?	15%	39%	41%	0%	0%	5%
9. Does your instructor appear to be aware of current developments in the subject area?	53%	30%	10%	3%	0%	4%
10. Do you feel that the instructor grades you fairly?	49%	41%	8%	0%	0%	2%
11. Does your instructor encourage you to seek his help?	47%	37%	12%	2%	0%	2%
12. How well are class presentations organized?	40%	28%	25%	7%	0%	0%
13. Is the instructor fair in his dealing with you?	28%	43%	23%	4%	0%	2%

TABLE XIX, SUMMATION OF STUDENT EVALUATION OF TEACHING (cont'd)

	A	B	C	D	F	BLANK
14. Did your instructor stimulate your interest in this subject?	33%	36%	26%	0%	3%	2%
15. Would you be hesitant to express an idea contrary to that of your instructor's?	43%	28%	13%	3%	3%	8%
16. How would you rate the teaching effectiveness of your instructor?	30%	57%	7%	3%	3%	0%

Mean grade = B

$$z = \frac{p_a - p_b}{\sqrt{\bar{p}\,\bar{q}\left[\frac{1}{n_b} + \frac{1}{n_a}\right]}}$$

p_a = proportion of passing students using TEC (34 out of 43 = .791)

p_b = proportion of passing students using traditional mode (121 out of 184 = .658)

$\bar{p}$ = proportion of all students who passed (155 out of 277 = .683)

$\bar{q}$ = proportion of all students who did not pass ($1 - \bar{p}$)

Since the z value equalled 1.688, I reject H_o and accept H_a. The TEC system produces significantly higher proportions of passing students in TEC 145 than does the traditional mode.

Using the chi square test, I compared grade levels attained by students who studied under the two methods of instruction as follows:

Hypothesis (H_o): Students in TEC 145 who receive the Technical Education Component will not perform at significantly higher grade levels than those students who received the traditional mode of instruction.

Hypothesis (H_a): Students in TEC 145 who received the Technical Education Component will perform at significantly higher grade levels than those students who received the traditional mode of instruction.

TABLE XX
FREQUENCY OF TEC 145 STUDENTS TABULATED TO SHOW INCIDENCE OF GRADE AND WHETHER THEY RECEIVED TECHNICAL EDUCATION COMPONENT OR TRADITIONAL MODE OF INSTRUCTION

		MODE OF INSTRUCTION	
		TEC	TRADITIONAL
FREQUENCY OF GRADES	A/B	26	47
	C	8	74
	D/F	9	63

N=227

With a computed chi square value equal to 19.6637 with 2 degrees of freedom (3 x 2), table values equal to 9.210 at the .01 level of confidence, I reject H_o and accept H_a that students who studied under the Technical Education Component do perform at higher grade levels than those in TEC 145 who received the traditional mode of instruction.

COSTS OF PROJECT

Including cost sharing from Norfolk State College and the grant and other assistance from NASA, this project cost slightly more than $90,000. Planned expenditures for each six-month phase of the project appear in Appendix C, pages 130-134. Actual expenditures in each category closely paralleled the budget over the nineteen-month operation of the project except in the services and materials categories. Due to the high cost and lack of available services in such areas as graphics, packaging, kit fabrication, and audio tape production, a transfer of funds into the materials category

provided the research team with necessary supplies to meet the needs. Table XXI shows approximate allocations of time for the research team with the senior researcher/project director's and associate researcher's time based on a normal teaching load, and the others based on a 40-hour week.

TABLE XXI
ALLOCATION OF TIME ON PERCENTAGE BASIS

	Phase I	Phase II	Phase III
Senior Researcher/Project Director	75%	50%	75%
Associate Researcher	50%	50%	40%
Typist	75%	75%	80%
Laboratory Assistant	40%	25%	40%

Reliance solely on the research team for most of the writing and media production placed a tremendous strain on the group to acquire new skills and meet deadlines. While the instructional materials developed in this prototype TEC served the needs of this project, a finished product requires a team of instructional technology specialists.

CHAPTER 5

CONCLUSIONS AND RECOMMENDATIONS

This developmental applied research project grew out of a need to improve orientation to engineering technology and basic materials science for youth, especially females and minorities. The project succeeded in developing, implementing, and evaluating a prototype instructional component (TEC) on basic materials science with a self-pacing and individualized mode. We furnished Career Awareness and Career Exploration Kits developed in the project to Tidewater area secondary schools after conducting workshops with counselors and instructors in those schools. Norfolk State College and Thomas Nelson Community College adopted the TEC for freshman-level courses on industrial materials and processes.

CONCLUSIONS

Kilduff's and my findings substantiate the following conclusions:

1. This project demonstrated that a systematic approach to instruction can produce valid and valuable instructional materials that provide non-traditional students a viable mode of learning.
2. The materials of this prototype TEC are both appropriate and accurate and will serve as useful orientation to engineering

technology and materials science to most youth, especially minorities.

3. The TEC needs a team of educational technology specialists to produce and refine finished products for wide distribution.

4. Students who use this TEC for basic materials science concepts covered in it will pass in significantly higher ratios and receive higher grade levels than students who receive traditional instruction, provided the instructor receives preparation on the use of self-pacing individualized instruction.

5. Students who employ this TEC will better understand the need for knowledge of basic materials science and will be motivated to continue studies in engineering technology.

6. Systematic instruction demands high costs in both human and financial terms.

7. Counselors and educators seek readily available instructional materials on engineering technology and basic materials science.

8. This country requires commitments--such as made by NASA, the research team, and all involved in this project--to build the required technician/technologist manpower pool and remove access barriers to careers in the engineering field for minority and female students.

RECOMMENDATIONS

Based on the conclusion I recommend:

1. This TEC receive additional support to revise and refine the elements contained in it.
2. After refining the TEC, we must continue implementation in both high schools and colleges.
3. Closer relationships between education, government, and industry should develop to provide more opportunities for similar projects.
4. Those who control funds in education, industry, and government should commit themselves to adequately funding teams of educational technology specialists who can develop systematic instruction in engineering technology.

REFERENCES CITED

Abitia, Freddie. "The Development and Field Testing of a Self-Instructional System in Industrial Design Methodology." Unpublished Ed.D. dissertation, Washington State University, 1971.

Abrahamson, S. "Professional Education: Programmed Instruction." Journal of Education Research, October 1965, pp. 341-42.

Alden, John D. "Women and Minorities in Engineering." Engineering Education, April 1974, pp. 498-501.

American Society for Engineering Education. Engineering Technology Education Study--Final Report. Washington: American Society for Engineering Education, 1972.

Baker, Robert L., and Richard E. Schutz, eds. Instructional Product Development. New York: Van Nostrand Reinhold, 1971, pp. 132-34.

Baldwin, Thomas S. "Evaluation of Learning in Industrial Education." Handbook on Formative and Summative Evaluation of Student Learning. Benjamin S. Bloom, J. Thomas Hastings, and George F. Madaus. New York: McGraw-Hill, 1971, pp. 857-69.

Barlow, Melvin L., ed. Vocational Education. Sixty-Fourth Yearbook of the National Society for the Study of Education. Chicago: University of Chicago Press, 1965.

Bloom, Benjamin S., J. Thomas Hastings, and George F. Madaus. Handbook on Formative and Summative Evaluation of Student Learning. New York: McGraw-Hill, 1971.

_____, M. D. Englehart, E. H. Furst, W. H. Hill, and D. R. Krathwohl. Taxonomy of Educational Objectives, Handbook I: Cognitive Domain. New York: David McKay, 1956.

Bockerman, David C. "The Effectiveness of Programmed Instruction Versus the Lecture--Discussion Method of Teaching Basic Metallurgical Concepts." Unpublished Ed.D. dissertation, University of Northern Colorado, 1971.

Bulkeley, Peter Z. "The Crises in Engineering Manpower--and the Obsolecent Engineer." Engineering Education, November 1974, pp. 140-45.

Burt, Samuel M. Industry and Vocational Technical Education--Advisory Committee. New York: McGraw-Hill, 1967.

Carlson, Henry Leonard. "Functions and Activities of Lay Advisory Committees for Selected Junior College Vocational Programs." Unpublished Doctoral dissertation, University of California, Los Angeles, 1967.

Career Opportunities: Engineering Technician. Chicago, J. G. Ferguson, 1969.

Corey, Marianne, and Joseph McKinley. "How Valid is the Stereotype?" Engineering Education, April 1974.

Criteria for Technical Education: A Suggested Guide. U.S.O.E. Bulletin E-80056. Washington: U.S.O.E., 1968.

Dunn, Rita, and Kenneth Dunn. Practical Approaches to Individualized Instruction: Contracts and Other Effective Teaching Strategies. West Nyack, NY: Parker Publishers, 1972.

Encylopedia of Careers. Chicago, J. G. Ferguson, 1972.

Engineering Manpower Commission of Engineers Joint Council. Supply-Demand Imbalances as seen by Employers of Engineers and Technicians. Publication No. 221. New York: Engineering Manpower Commission of Engineers Joint Council, December 1971.

Espich, James E., and B. Williams. Developing Programmed Instructional Materials: A Handbook for Program Writers. Palo Alto, CA: Fearon, 1967.

Feck, Vincent. What Vocational Education Teachers and Counselors Should Know About Urban Disadvantaged Youth. U.S., Educational Resources Information Center, ERIC Document ED 059 351, October 1971.

Flammer, Gordon H., and Robert C. Mechan. "Student Achievement and Motivation." Engineering Education, March 1974, pp. 432-35.

Fryklund, Verne C. Occupational Analysis Techniques and Procedures. New York: Bruce Publishing, 1970.

Gleazer, Jr., Edmund J. Project Focus: A Forecast Study of Community Colleges. New York: McGraw-Hill, 1972, pp. 104-07.

Grayson, Lawrence P., and Joseph M. Biedenback, eds. Individualized Instruction in Engineering Education. Washington: American Society for Engineering Education, 1974.

Greenfield, Lois B. "Engineering Students' View of Guidance and Counseling." Engineering Education, April 1974, pp. 510-22.

Herrscher, Barton R. Implementing Individualized Instruction. Houston: ArChem Co. Publishers, 1971.

Hirschhorn, Joel S., and George M. Maxwell. "Materials Science: For Strangers in a Strange Land." Paper presented to the Annual Conference for the American Society for Engineering Education, Rensselar Polytechnic Institute, Troy, New York, July 17-20, 1974.

Holland, Jr., Edward G. "An Experimental Study to Determine the Effectiveness of Slide Quiz Items as a Part of Audio-visual Presentations in Engineering Design Graphics." Unpublished Ed.D. dissertation, Texas A&M University, 1973.

Holsclaw, James E. "The Development of Procedural Guidelines for the Systematic Design of Instruction Within Higher Education." Unpublished Ed.D. dissertation, University of Southern California, 1974.

Jacobs, James A. "An Analysis of Occupational Requirements of Selected Organizations on the Virginia Peninsula Employing Drafting and Design Technicians." Unpublished Masters research project, College of William and Mary, 1969, and the continued update of this study using local and national engineering agencies.

_____. Competencies in Career Education: A Student's Guide for the Instructional Component. U.S., Educational Resources Information Center, ERIC Document ED 099 544/ERIC Clearinghouse in Career Education CE 002 690, May 1975.

_____. "The Content Validation and Resource Development of a Course in Materials and Processes of Industry through the use of NASA Experts at Norfolk State College." Unpublished practicum, Nova University, 1974.

Jacobs, Paul I., Milton H. Maier, and Lawrence M. Stolurow. A Guide to Evaluating Self-Instructional Programs. New York: Holt, Rinehart and Winston, 1966.

Johnson, Milo P., and Albert J. Grafsky, Jr. Accountability: Evaluation for Occupational Programs. Chicago: American Technical Society, 1973.

Kapfer, Philip G. "Practical Approaches to Individualizing Instruction." Toward Instructional Accountability. Eds., John E. Roueche and Barton R. Herrscher. Palo Alto, CA: Westinghouse Learning Corp., 1973, pp. 33-37.

Kemp, Jerrold E. Instructional Design: A Plan for Unit and Course Development. Belmont, CA: Fearon, 1971.

Kozak, Michael R. "A Critical Analysis of Individualized Instruction Since 1944." Unpublished Ed.D. dissertation, Texas A&M University, 1974.

Krathwohl, D. R., B. S. Bloom, and B. B. Masia. Taxonomy of Educational Objectives, Handbook II: Affective Domain. New York: David McKay, 1964.

Lange, P. C. "What's the Score On: Programmed Instruction?" Today's Education, February 1972, p. 59.

Lockette, Rutherford E., and Lawrence F. Davenport. Review and Synthesis of Vocational Education for the Urban Disadvantaged. U.S., Educational Resources Information Center, ERIC Document ED 058 391, November 1971.

Mager, Robert F. Analyzing Performance Problems. Belmont, CA: Fearon, 1970.

_____. Developing Attitudes Toward Learning. Palo Alto, CA: Fearon, 1968.

_____, and K. M. Beach. Developing Vocational Instruction. Belmont, CA: Fearon, 1967.

_____. Goal Analysis. Belmont, CA: Fearon, 1972.

_____. Measuring Instructional Intent. Belmont, CA: Fearon, 1973.

_____. Preparing Instructional Objectives. Belmont, CA: Fearon, 1962.

McCollum, Kenneth A. "Self-paced Learning and Student Motivation." Engineering Education, March 1974, pp. 427-29.

McCrary, Jr., Jesse. "The Disadvantaged: An Overview." Video-tape of a workshop on the disadvantaged, Florida Atlantic University, Boca Raton, FL, 1974.

McKeachie, W. J. "The Decline and Fall of the Laws of Learning." Educational Researcher, Vol. 3, No. 3, March 1974, pp. 7-11.

McMichael, J., and J. R. Corey. "Contingency Management in an Introductory Psychology Course Produces Better Learning." Journal of Applied Behavior Analysis, 2, 1969, pp. 79-83.

Medsker, Leland, and Dale Tillery. Breaking the Access Barriers. New York: McGraw-Hill, 1971, pp. 45-46.

The Pennsylvania State University Materials Research Laboratory. "Educational Modules for Materials Science and Engineering." Prevu/Revu. Vol. 1, No. 1. State College: The Pennsylvania State University Materials Research Laboratory, May 1975.

The Planning Commission for Expanding Minority Opportunities in Engineering. Minorities in Engineering--A Blueprint for Action. New York: The Alfred P. Sloan Foundation, 1974, pp. 63-68.

Plants, Helen L. "How to Begin in Individualized Instruction." Individualized Instruction in Engineering Education. Eds., Lawrence P. Grayson and Joseph M. Biedenback. Washington: American Society for Engineering Education, 1974, pp. 47-54.

Pond, Robert B. "Intriguing Freshmen with Materials Science." Paper presented to the Annual Conference for American Society for Engineering Education, Colorado State University, Fort Collins, CO, June 16-19, 1975.

Popham, W. James, and Eva L. Baker. Criterion-Referenced Instruction. Belmont, CA: Fearon, 1973.

_____, and Eva L. Baker. Systematic Instruction. New York: Prentice-Hall, 1970.

Postlethwait, S. N., and J. D. Russell. "Minicourses--The Style of the Future?" Toward Instructional Accountability. Eds., John E. Roueche and Barton R. Herrscher. Palo Alto, CA: Westinghouse Learning Corp., 1973, pp. 24-32.

Roueche, John E., and Barton R. Herrscher. Toward Instructional Accountability. Palo Alto, CA: Westinghouse Learning Corp., 1973.

_____, and John C. Pittman. A Modest Proposal: Students Can Learn. San Francisco: Jossey-Bass, 1972.

Ruskin, Robert S. The Personalized System of Instruction: An Educational Alternative. U.S., Educational Resources Information Center, ERIC/Higher Education Report No. 5, 1974.

Sherman, J. Gilmour, ed. Personalized System of Instruction: 41 Germinal Papers. Menlo Park, CA: W. A. Benjamin, Inc., 1974.

Smith, Kenneth T. A Lap on Writing Laps. Fort Lauderdale, FL: Broward County Board of Public Instruction, 1969.

Sorenson, Garth. "Evaluation for the Improvement of Instructional Programs: Some Practical Steps." Evaluation Comment, Vol. 2, No. 4, January 1971, pp. 1-5.

"Special Effective Teaching Issue." Engineering Education, March 1974.

State of Washington Coordinating Council for Occupational Education. Mechanical Engineering Technology: Performance Specifications and Training Objectives for the Technician. Olympia: State of Washington Coordinating Council for Occupational Education, 1970.

Toffler, Alvin. Future Shock. New York: Random House, 1970.

U. S., Department of Labor. Manpower Research Bulletin - Drafting and Design 1965 - 1975. Washington, 1966.

Wasserman, Melvin. "The Design and Validation of a Self-instructional Learning Package for the Acquisition of Ascending Melodic Interval Skills: A Developmental Process." Unpublished Ed.D. dissertation, Wayne State University, 1974.

Work, Clyde E., and Martha E. Sloan. "A Study of the Awareness and Attitudes of Junior High Girls Toward Engineering and Experiments with Methods of Increasing their Awareness and Interest in Engineering." Paper presented to the Annual Conference for the American Society for Engineering Education, Colorado State University, Fort Collins, CO, June 16-19, 1975.

Wyatt, Larry Douglas. "The Development and Testing of Auto-tutorial Instructional Materials for Choral Conducting Students." Unpublished Ph.D. dissertation, The Florida State University, 1974.

REFERENCES

Baird, Ronald J. Industrial Plastics. South Holland, IL: Goodheart-Wilcox, 1971.

Brethower, Dale M. Programmed Instruction: A Manual of Programming Techniques. Chicago: Educational Methods, Inc., 1963.

A Brief Review of Instructional Objectives for Junior College Courses. University of California: The ERIC Clearinghouse for Junior Colleges, June 1973.

Cohen, Arthur M. Defining Instructional Objectives. Beverly Hills, CA: Glencoe Press, 1971.

_____. Objectives for College Courses. Beverly Hills, CA: Glencoe Press, 1970.

Daniel, W. J., and P. Murdock. "Effectiveness of Learning from a Programmed Text Compared with a Conventional Text Covering the Same Material." Journal of Educational Psychology, 59 (1968), 425-31.

DeGarmo, E. Paul. Materials and Processes in Manufacturing. 3d ed. New York: Macmillan, 1973.

Doty, B. A., and L. A. Doty. "Programmed Instruction Effective Characteristics." Journal of Educational Psychology, 55 (1964), 334-38.

Edling, Jack V., and others. Four Case Studies of Programmed Instruction. New York: Fund for the Advancement of Education, 1964.

Fry, Edward B. Teaching Machines and Programmed Instruction: An Introduction. New York: McGraw-Hill, 1963.

Hirschhorn, Joel S., and George M. Maxwell. Materials Science: For Strangers in a Strange Land. Madison, WI: American Printing and Publishing, 1975.

Jacobs, James A. "A Scheme to Employ Management by Objectives to Facilitate Instruction for the Division of Industrial Education and Technology at Norfolk State College." Unpublished practicum, Nova University, 1974.

Kazanas, H. C., R. S. Klein, and J. R. Lindbeck. Technology of Industrial Materials. New York: Bennett, 1974.

Markle, Susan Meyer. Good Frames and Bad: A Grammar of Frame Writing. 2d ed. New York: John Wiley and Sons, 1969.

McGrew, J. M. "Branching Program, Text and Lecture: A Comparative Investigation of Instructional Media." Journal of Applied Psychology, 50 (1966), 505-08.

Melaragno, Ralph. "Two Methods of Adapting Self-instructional Materials to Individual Differences." Journal of Applied Psychology, 58 (1967), 327-31.

Milby, Robert W. Plastic Technology. New York: McGraw-Hill, 1973.

Orr, William C. "Retention as a Variable in Comparing Programmed and Conventional Instructional Methods." Journal of Education Research, 62 (1968), 11-13.

Pollack, Herman W. Materials Science and Metallurgy. Reston, VA: Reston Publishing, 1973.

Popham, W. James, and T. R. Husek. "Implications of Criterion Referenced Measurements." Journal of Educational Measurement, Vol. 6, No. 1, Spring 1969.

Skinner, B. F. The Technology of Teaching. New York: Appleton-Century-Crofts, 1968.

Van Vlack, Lawrence H. A Textbook of Materials Technology. Reading, MA: Addison-Wesley, 1973.

Wells. "The Relationship of High School Industrial Arts Experience to Performance in Four Year College Technical Programs." Dissertation Abstracts, 35 (1974), 1478A.

Wood, Leslie A. "Programmed Textual Materials as a Partial Substitute for Teacher-Led Classroom Procedures in Geography." Journal of Education Research, 58 (1964), 1.

APPENDIX A

PROTOTYPE STEM

A Self-pacing Technical Education Package

STEP-P1

POLYMERIZATION OF PLASTICS

by

Thomas F. Kilduff & James A. Jacobs

© 1975

developed at

NORFOLK STATE COLLEGE
MECHANICAL DESIGN TECHNOLOGY

with support of

NASA-LANGLEY RESEARCH CENTER
OFFICE OF PUBLIC AFFAIRS AND
EDUCATIONAL PROGRAMS-HAROLD MEHRENS,
TECHNICAL OFFICER

1975

Illustrations: Douglas LaBar

RATIONALE: Why Should you Study a STEP* on Plastics
(Polymeric Materials)

In this particular STEP* you are going to discover the "hidden" structure of plastics and see why plastics are an engineering material. Why learn about plastics? Well, stop reading right now-- just look around you. If you can't add up on both hands all the plastic materials that are surrounding you the only explanation is that you haven't learned enough about them yet or they are covered up with paint (a good bet is that it too is made from plastic materials). Did you count the chair you are sitting in? You're standing. Okay, how about the shoes you're wearing? No shoes? Oh, sorry, you're not wearing shoes today! Well, anyhow, the point is that today plastic materials find many uses in our daily lives and the experts predict that we will see more and more uses of plastic materials as they are developed to handle new requirements.

Stop reading now and go watch the slide presentation "Plastics-A Space Age Material." When you have finished seeing it, come on back and we will talk some more about how plastics are made.

Meet Poly Prof, he will help guide you through these STEPS on plastics.

*Self-pacing Technical Education Package

The fields of Engineering and Engineering Technology work with materials. These materials can be identified as either being a metallic such as steel, brass or iron or a non-metallic such as concrete, wood, plastics, including rubber. Much of the known information about materials can be found in handbooks; however, you will need to know how to make sense out of the tables so that you can use the information to select the proper material necessary to do the job. The word "proper" means many things. For example, it could mean as an engineer or technician your boss would expect you to select a material because of economy. Why use an expensive material instead of a cheap one if the cheap one will do what you want it to do. Of course, we assume both satisfy other requirements. Your boss also expects that you will know that the word "proper" means getting for him the material that has the right physical properties for the job. Physical properties are words that describe a material's behavior when subjected to mechanical loads, heat, or electricity.

Why is one material brittle (breaks easily)? Why does one conduct heat? Why does one lose its strength as the temperature changes? All these behaviors of material can be satisfactorily understood if you have a knowledge of how these materials put themselves together - that is, their internal make up, or to say it with other words, their micro structure, or molecular architecture. This tells us of the forces that hold or cement the structure together. We call this bonding. So if you know something of the principles that are involved in the internal make up of a material, you can pretty well estimate the material's attributes, capabilities, and advantages/disadvantages and weaknesses when you go looking for the right material to use on your project.

QUESTION: What materials are used in a car?

On the next page is a picture of a 1972 Mercury that has been taken apart. The number for each pile are as follows: 1) light steel, less than 1/8 inch thickness; 2) heavy iron and steel, more than 1/8 inch thickness; 3) cast iron; 4) mineral wool, 5) glass and ceramic; 6) carbon, activated; 7) molded nylon; 8) bakelite; 9) lead; 10) stainless steel; 11) asbestos; 12) copper and brass; 13) aluminum; 14) zinc die-cast; 15) mastic; 16) rubber; 17) polyurethane foam; 18) acrylic; 19) vinyl; 20) polyethylene styrene; 21) polypropylene; 22) nylon fabrics; 23) Acrylonitrile-butadiene-styrene (ABS); 24) paper, fiberboard, and padding; and 25) cotton, jute, etc. (textiles). Piles numbered 7,8,17,18,19,20,21,22 and 23

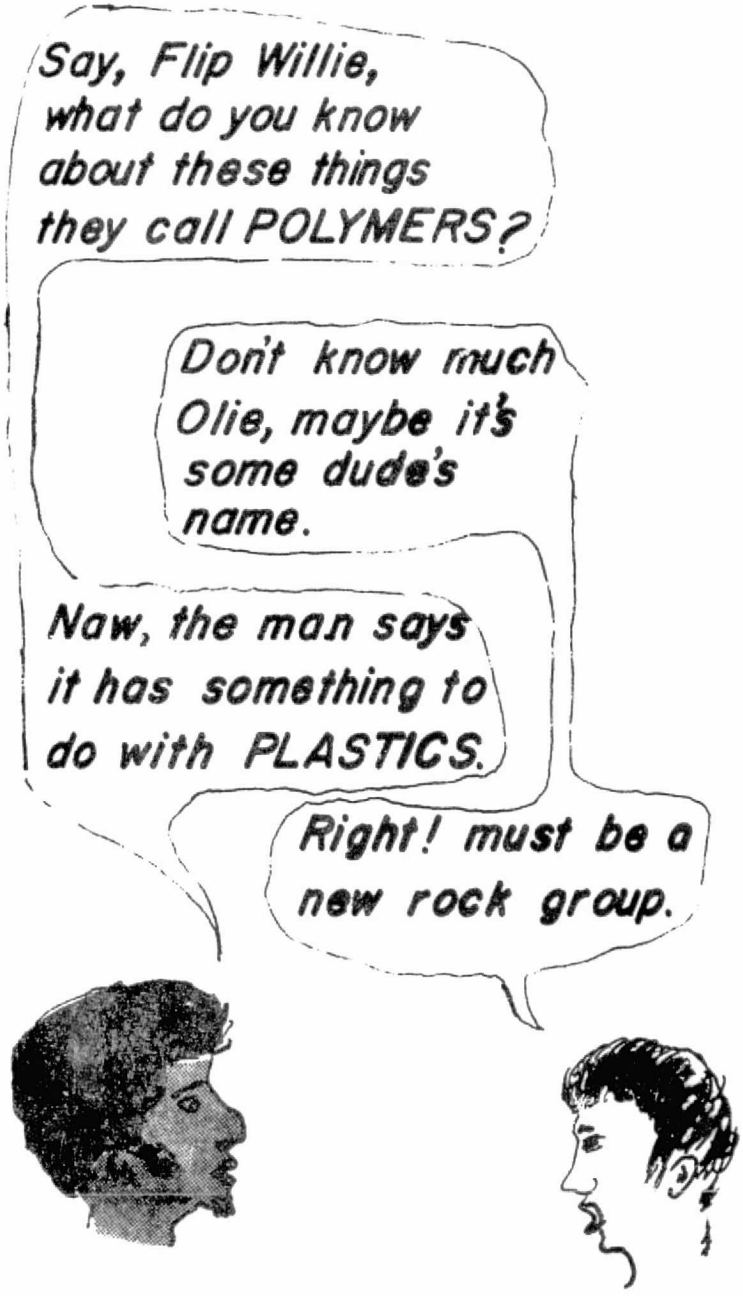
Say, Flip Willie, what do you know about these things they call POLYMERS?
Don't know much Olie, maybe it's some dude's name.
Naw, the man says it has something to do with PLASTICS.
Right! must be a new rock group.

are various types of plastics. Did you realize there was this much plastic in a car? This 1972 car has about 110 pounds of plastics in it. In 1960 there were about 25 pounds of plastics used in a car and by 1980 it could go well over 200 pounds.

Here a NASA technician is assembling a model aircraft. Technicians are required to have a knowledge of plastics in order to deal with the variety of materials in the technical fields.

OBJECTIVES: What you can Learn from this STEP?

The overall purpose of this STEP is for you to gain an appreciation for plastics as a space age engineering material and to be able to communicate effectively about plastics. If you give this STEP your full attention by the time you have completed it, you will be able to do the following:

1. Define and illustrate by sketching

   a. A typical monomer (mon-uh-mer)
   b. A typical polymer (paul-uh-mer)

2. Describe polymerization by addition and give one example.

3. Describe polymerization by condensation and give one example.

4. Explain the results of a plastic developing into a thermoset or a thermoplast.

5. List examples of thermosetting and thermoplastic plastics.

6. Develop confidence in your abilities to understand and use basic principles in materials science.

With these objectives completed Miss Poly is on her way to becoming an engineering technician.

Choose one of the following paths.

1. I feel that I already know the above objectives and will ask the instructor for the self-test now.

2. I want to use this STEP on properties of polymeric materials to accomplish the objectives. Begin on page 7.

3. I want to read from the textbooks in the Reference Section to accomplish the objectives.

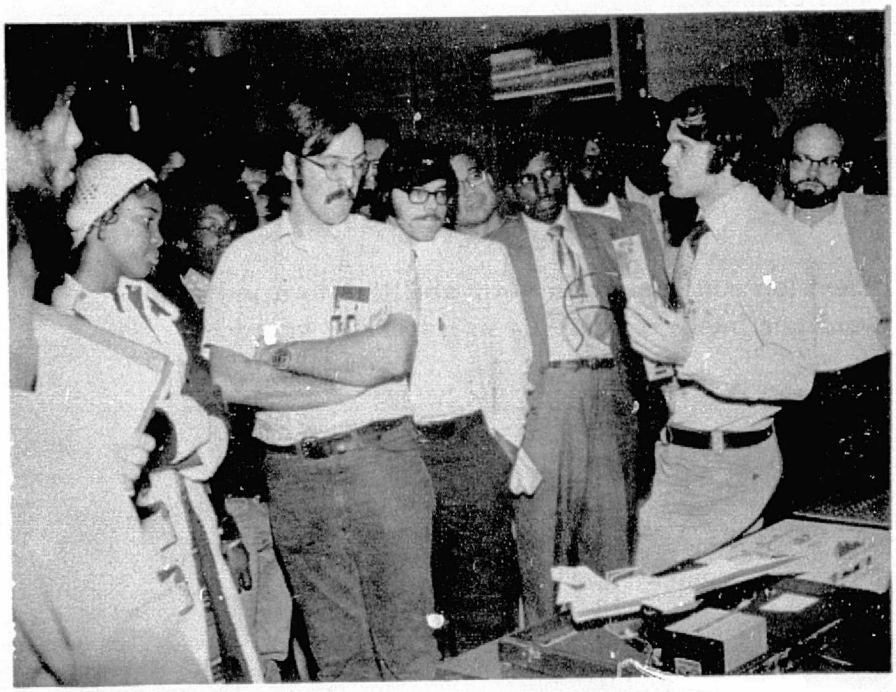

Norfolk State College materials technology students and faculty visit NASA-Langley Research Center to gain firsthand information. NASA researchers and technicians supply the students with valuable experiences related to plastics and other materials. The model jet is constructed of plastic (polymeric) material.

POLYMERIZATION OF PLASTIC MATERIALS

In order to obtain a working knowledge of plastic materials, you have to know something about the structure of the various plastics. Once you acquire a familiarity with their structure, their characteristic qualities are yours for the asking. But how do you get a handle on the structures of materials? By learning a little bit about chemistry which is presented in this STEP. As all trades, occupations, and professions have their particular vocabulary or jargon, so too does the study of various subject matter fields such as the field we are concerned with -- materials science. You can't "rap" with any of these particular groups of individuals until you learn their language and so it is with the study of plastics. Chemistry has been the vehicle for the evolution and innovation in the plastics industry and therefore some of its words and concepts must become part of your vocabulary to allow us to intelligently discuss the subject matter at any length.

MONOMERS AND POLYMERS

Chemists have taken apart or chemically broken down materials into their basic ingredients (analyzed them) and then put them back together again (synthesized them) in a different form. This is basically what has produced the many different types of plastic materials on today's market. A molecule can also be considered a group of atoms which are closely held together (bonded) but have no strong ties to other molecules. The number of atoms in a molecule varies

H_2O — WATER MOLECULE

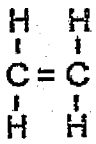

C_2H_4 — ETHYLENE MOLECULE, MICRO MOLECULE OR MONOMER

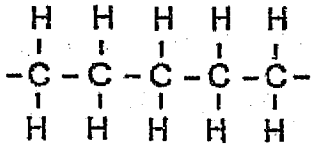

$C_2H_4 - C_2H_4 - C_2H_4 \cdots$ — MACRO MOLECULE OF ETHYLENE, OR A POLYMER OF ETHYLENE

from two atoms to molecules having millions of atoms. In the study of plastic materials, the molecules are relatively large compared to familiar molecules such as water (H_2O). In organic chemistry, the small molecules are called micromolecules (my-crow-maul-u-quels) and the large molecules are known as macromolecules. A better name for both of these molecules is to call them monomers (mon-uh-mers) and polymers (paul-uh-mers) respectively.

Let's look back at our ethylene micromolecule one more time. The two carbon atoms are tied together with double, short straight lines. This represents what the chemists call a double covalent bond. The hydrogen atoms attach themselves to the carbon atoms with a single straight line. This represents a single covalent bond. It is essential to have monomers that possess these double bonds before polymerization can take place.

NASA researcher, Bob Baucom, demonstrates the polymerization of nylon to Norfolk State College students of Mechanical Design Technology. The catalyst has been mixed with the resin making it possible just to pull nylon string out of the jar.

By <u>addition polymerization</u> we chemically added the two monomers only after the double bond between the carbon atoms was broken or opened permitting the monomers to join in chain-like fashion forming a giant ethylene polymer. In this example, we used just two monomers but in the real thing, there would be literally hundreds of thousands of these monomers forming macromolecules or polymers and with ethylene monomers we would have produced polyethylene polymers.

You can find the answer for each question below the question. Keeping the answer covered, write your response to the question on the answer sheet and then check your answer. It is important to follow this procedure to aid your learning.

1. Question: Addition polymerization is

the chemical process of adding _____

to produce _____.

monomers polymers

Before we leave this crude drawing of a polyethylene polymer, we might note that the polymer consists of repeating units of atoms

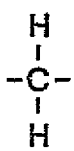

(CH_2)

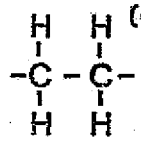

(C_2H_4)

(polyethylene mers)

such as the diagram on the preceding page.

These basic building blocks of atoms can be considered the mer in poly mer. Get this!! If we joined up about 2,000 of these mers, we would have produced the plastic polyethylene.

How about a monomer? Did you miss it back there? Yes, the monomer is the ethylene molecule containing the necessary double bond that once opened provides the magic reaction that allows molecules to bond to each other through the single bond linkage of one carbon atom to another forming a long chain with the carbon atoms acting as a backbone for the chain.

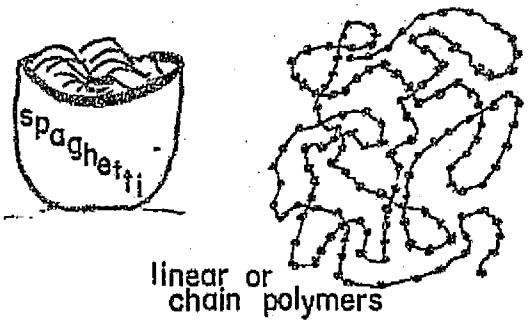

Just remembered one more point about these long chain or linear polymers. You might think they all grow in straight lines but that is far from the truth. They actually curve and coil and you could compare many of them to cooked spaghetti in a bowl.

Now before we quit for some meatballs and spaghetti, let's see how much we remember about the magic of building polymeric materials such as polyethylene.

2. Question: Polymers consist of _____ of molecules that curve and coil like cooked spaghetti.

chains

3. Question: Another name for a mer is a building _____ or a _____ unit.

block repeating

If you missed the answer, go back to page 16 and reread the section beginning with molecular weight.

Now's your chance to hit the jackpot.

11. Question: If we had a giant molecule (polymer) that contained 1000 molecules of ethylene what would be its molecular weight?

(a) 28000
(b) 2800
(c) 280

(a) 28 x 1000 = 28000

In our discussion of polymerizing ethylene we used one linear chain of polyethylene. We said that the linear chain was not straight but curved and coiled. The lengths of the chains may be short or extremely long (10 mers to many hundred thousands mers). The longer the chain the larger the molecular weight of the chain. One thing is sure. The chains have random lengths. As these macromolecules get longer they get more tangled up with each other and this causes the density to increase and the ability of the polymer to perform plastically to decrease. (Refer to STEP P2 on Viscosity and Viscoelasticity for further understanding).

1. EXERCISE

Obtain a molecular kit from your instructor and construct the following, a) ethylene molecule, b) polymer of ethylene, c) a linear chain of polyethylene with a minimum of eight carbon atoms making up the backbone of the chain and with a maximum of three branches consisting of a minimum of two carbon atoms each. Refer to page 7 for the diagrams.

BRANCHING

As with life, chain growth is not as simple as we have tended to show. Not only do these chains grow at the ends, but they grow, to various degrees, side branches much like the branches of a tree.

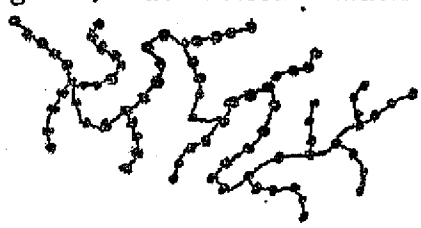

These branches or side groups prevent the linear chains from packing close together. This accounts for variations in a number of important properties of polymers such as density, flexibility, transparency. (Refer to Reference for further study of properties).

12. Question: In a polymer the length of

the linear chains are not the _____.

If you answered with "same" you're still in this ball game.

13. Question: With different lengths of chains formed

each having different molecular weights, the

molecular weight of the polymer must be

some sort of an _____.

Yes, the value of molecular weight must be an <u>average</u>. That is, not only because the lengths of the chains (individual polymers) are random, but because they are all scrambled about with some of them sprouting branch chains preventing any close packing of the chains.

14. Question: The properties of polymeric materials

vary with the average length of the linear chains

and with the amount of _____.

22. Question: Once the final heating and/or pressure is applied to _____ they cannot be softened by heat.

If you answered thermosets you are correct and have finished the last question before your final exercise to show that you have successfully reached the objectives of this STEP.

3. EXERCISE

To determine if a polymer is a thermoplastic or a thermosetting plastic and for further study consult the following sources:

Giant Molecules by Morris Kaufman, Doubleday Science Series, 1968, p. 103-111.

A Textbook of Materials Technology by L. H. VanVlack, Addison-Wesley, 1973, p. 175-181.

Materials and Processes of Manufacturing by E. Paul DeGarmo, Macmillian Co., 2nd Ed., Table 9-1, p. 172-173.

Other textbooks on materials and processes of manufacturing or texts on plastics.

4. EXERCISE

Review the definitions of thermoplastics and thermosetting plastics. To identify a plastic as a thermoplastic obtain a small piece of the plastic, heat it, and observe it to see if it softens and/or melts.

This exercise must be done in a laboratory setting under the supervision of the instructor with full awareness of the safety precautions involved.

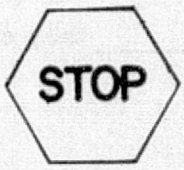

5. EXERCISE (optional)

1. Use the Glossary of Plastics Terms by Phillips Petroleum and look up the following terms:

a. catalyst

b. amorphous

c. thermoset

d. crosslinking

e. branching

2. Write the definition of each term above using your own words.

3. Upon completing #2 use each term above in writing a sentence.

When and if you wish time to review this STEP, go ahead now. When you are ready to take the post test, please notify your instructor. Good luck -- I enjoyed working with you.

Sylvester Super Student has "got it right" on polymers and is ready to "make it" as a technician and... otherwise...

References

1. VanVlack, L. H., A Textbook of Materials Technology, Addison-Wesley Publishing Co., 1973

2. Bellmeyer, Fred W. and Renee Ford, The Anatomy of Plastics, Science & Technology, January 1968, pp. 22-37.

3. Kazanas, H. C., et. al., Technology of Industrial Materials, Charles A. Bennett Co., Inc., Illinois 1974, Chapter 4, p. 157-194.

4. Bellmeyer, Fred W., Synthetic Polymers, Anchor Books, Doubleday & Company, N. Y., 1972.

5. Kaufman, Morris, Giant Molecules: The Technology of Plastics, Fibers and Rubber. Doubleday & Co., 1968.

6. Milby, Robert V., Plastics Technology, McGraw-Hill, 1973.

7. Baird, Ronald J., Industrial Plastics, Goodheart-Wilson, 1971.

8. Hanks, Richard W., Materials Engineering Science-An Introduction, Harcourt, Brace & World, 1970.

9. The Way Things Work: An Illustrated Encylopedia of Technology, Simmon and Schuster, N. Y. 1967.

10. Christiansen, G. S. and Paul H. Garrett, Structure and Change. An Introduction to the Science of Matter, W. H. Freeman & Co., 1960.

11. Smith, Lavon B. and Marion E. Maddox, Elements of American Industry, McKnight & McKnight Publishing Company, 1966.

12. DeGarmo, E. Paul, Materials and Processes in Manufacturing, 3rd ed., Macmillian, 1973.

13. Perditz, Geroge F. and Norman J. Johnston. Thermally Stable Macromolecules in Chemistry in Space Research published by American Elsevier Publishing Company, 1972.

Elements of the STEM* on Plastics

1. STEP** P-1: Polymerization of Plastics - 15 copies
   Pretest/post test - 15 copies
   Pretest/post test answer sheet - 30 copies
   Ditto master of answer sheet

2. STEP P-2: Properties of Plastics - 15 copies
   Pretest/post test - 15 copies
   Pretest/post test answer sheet - 30 copies
   Ditto master of answer sheet

3. Plastics - A Space-Age Material
   77 slides in carousel tray
   Cassette audio tape - 17 minutes

4. Specimens and Supplies for Experimentation
   a. molecular structure models
   b. Castolite acrylic - polyester casting resin
   c. silicone spray release (for molds)
   d. specimens of polymeric film, sheet, and foam to be used for experimentation and comparison of plastic properties

5. Resources for the instructor - see separate page

---

* Self-pacing Technical Education Module
** Self-pacing Technical Education Package

INSTRUCTOR'S RESOURCES ON PLASTICS

For Use With STEM* on Plastics

by J. A. Jacobs and T. F. Kilduff

1. Glossary of Plastics Terms
2. SPI Film Catalog
3. NASA Film List
4. The Story of the Plastics Industry
5. Space Resources for the High School - Industrial Arts Resource Units
6. What NASA Has For You
7. NASA Resources for Industrial-Technical Educators
8. You Can Get A Piece of the Action
9. Personalized Casting
10. Technology in the Service of Man
11. Technical Support Package for Tech Brief
12. Skylab
13. NASA Visitor Center
14. Viking Project
15. Answers to Questions You Are Asking About Plastics & Environment
16. Technical Library (Handbook)
17. Space Shuttle
18. "That's One Small Step for a Man, One Giant Leap for Mankind"
19. Designing with Zytel Nylon Resin
20. Lexan Polycarbonate Resins Sheet
21. GE Plastics
22. Lexan Resin
23. Assorted Technical Booklets

* Self-pacing Technical Education Module

WORKSHOP ON A
TECHNICAL EDUCATION COMPONENT IN MATERIALS TECHNOLOGY
for Industrial Arts Teachers and Supervisors

February 24, 1975 - 10:30 AM - 12:00
NASA - Langley Research Center
Bldg. 1212, Room 201 - located on Taylor Road

Conducted by: James A. Jacobs - Norfolk State College
Thomas F. Kilduff - Thomas Nelson Community College

Introduction: James A. Jacobs

Explanation of the TEC on Materials Technology:
James A. Jacobs
Thomas F. Kilduff

- distribution of orientation materials
- presentation: "Plastics - A Space-Age Material"
- suggestions on use of the prototype STEM

Discussions: reaction to the TEC and questions on its implementation

Distribution of prototype STEM to field-test instructors

Instructor's Guide to
A SELF-PACING TECHNICAL EDUCATION MODULE on
PLASTICS
by: James A. Jacobs and Thomas F. Kilduff

This material is designed for individualized instruction which can serve either as a unit of study on plastics or as a supplementary resource to the study of manufacturing materials. The Self-pacing Technical Education Module (STEM P) consists of two Self-pacing Technical Education Packages (STEP P-1 and STEP P-2) and a slide/tape presentation entitled, "Plastics - A Space-Age Material." Through this study, the student will gain an introduction to the nature of plastic as an engineering material (see specific performance objectives in each STEP).

Rationale - This develops the student's awareness of the importance of the STEP and should motivate him/her to study. The slide/tape presentation supplements the written rationale and gives a quick review of the topics in STEP's P-1 and P-2.

Objectives - These performance objectives detail the exact criteria on which the student will be tested in order to determine mastery of the STEP's.

Alternate Learning Activities - Individuals learn in different ways depending upon their previous experiences. Three learning approaches are supplied to them to accomplish the objectives of each STEP. The instructor may have other learning alternatives. The choice should be that of each individual student.

Pretest - Some students may already possess some or all of the competencies of these STEP's. If they feel confident, allow them to take the pretest/post-test. Should they show mastery of some objectives and not others, then they should study those areas in which they are deficient.

Learning Activities - The written material is in programmed instruction based on current learning theory. Students should be equipped with paper and pencil to write down the answers to the programmed questions and not write in the booklet. Please emphasize that they are not graded on these questions. Writing the answers will reinforce their learning. Encourage them to be sure of the answers before preceding. Have them pass in these sheets. Analysis of the students' answers can be used to improve the instruction. The Exercises will provide additional feedback to the student through practice. These exercises can be done by individual students, in pairs, or in small groups. It may be desirable for the sake of time to allow different teams to engage in selected exercises after which the entire class discusses the results. PLEASE CAUTION THE STUDENTS ABOUT THE NECESSITY OF SAFETY PRECAUTIONS. Refer to written instructions and expert advice about ventilation precautions plus protection of skin, eyes, etc.

For Exercise VII in STEP P-2, the answers to #2 are a) acrylics, b) polycarbonate, c) polyester, d) ABS, and e) nylon. There are many possibilities for this type of exercise, and it should provide for good class discussion.

Post-test - This is administered when the student feels the objectives are mastered. You may wish to develop other forms of the test. It is recommended that the student does the grading under the instructor's supervision or watches the grading. This supplies immediate feedback and reinforces learning. Should the student not master the test (a score of 80%), then the materials, including the references, can be restudied. Students should be allowed to retest as often as they wish (and is practical) until mastery is obtained.

Advanced Study - These STEP's are only introducing materials. There are many references that supply further reading plus interesting experimentation. Industry and governmental agencies offer free films and other resources that would be of general interest to the students.

INSTRUCTOR'S EVALUATION

_____
TITLE OF STEP

_____
YOUR NAME

_____
CLASSES AND LEVEL IN WHICH STEP WAS USED

1. How would you rate this STEP's ability to meet its objectives?

Poor		Average		Excellent
1	2	3	4	5

2. What strengths do you find in this STEP?

3. What weaknesses do you find in this STEP?

4. How did you employ this STEP with your classes?

5. How do you understand student reaction to this STEP?

6. How would you improve this STEP?

7. Other evaluative comments to improve this STEP:

8. Do you consider this STEP valuable to supplement your instruction?

_____ Yes _____ No _____ Other

We are interested in improving this STEP. Please give us your opinions but do not sign your name.

_____
Title of STEP

Circle the number which best expresses your opinion. If you desire to comment, your feelings will be appreciated.

1. How would you rate the ability of this STEP to teach you?

Poor		Average		Excellent
1	2	3	4	5

Comment_____

2. Were the objectives or reasons for studying this STEP clear to you?

Unclear		Fairly Clear		Very Clear
1	2	3	4	5

Comment_____

3. Were the technical words well explained?

Poor		Average		Excellent
1	2	3	4	5

Comment_____

4. Were the exercises useful in understanding this subject?

Poor		Average		Excellent
1	2	3	4	5

Comment_____

5. How would you compare this type of teaching material to regular textbooks?

Worse		Same		Better
1	2	3	4	5

Comment_____

6. List some features of this STEP which you liked most.

_____
_____
_____

7. List some features of this STEP which you liked least.

_____

_____

_____

8. What would you like added to this material?

_____

_____

_____

9. Check the statement which best describes the way the entire STEP was written.

_____ too much jargon
_____ well written
_____ confusing
_____ poorly written
_____ concise and to the point
_____ other _____

PLEASE DO NOT GIVE YOUR NAME.

10. _____
School

11. _____
Grade Level

12. _____
Subject in which this STEP was used

13. _____
Age

14. _____ _____
Male Female
(Check One)

15. (Check One)

_____ Black
_____ Caucasian
_____ Other

16. _____
What do you plan as a career?

17. Has this STEP made you interested in becoming an engineering technician?

Not Interested		Undecided		Very Interested
1	2	3	4	5

Comment _____

18. How much education do you plan on getting before you begin your career or life's work?

College (Check One)

_____	_____	_____	_____	_____
no degree	2 year degree	4 year degree	masters degree	doctors degree

APPENDIX B

TECHNICAL EDUCATION COMPONENT (TEC)

THE ENGINEERING TEAM

in Product Research, Development, and Manufacture

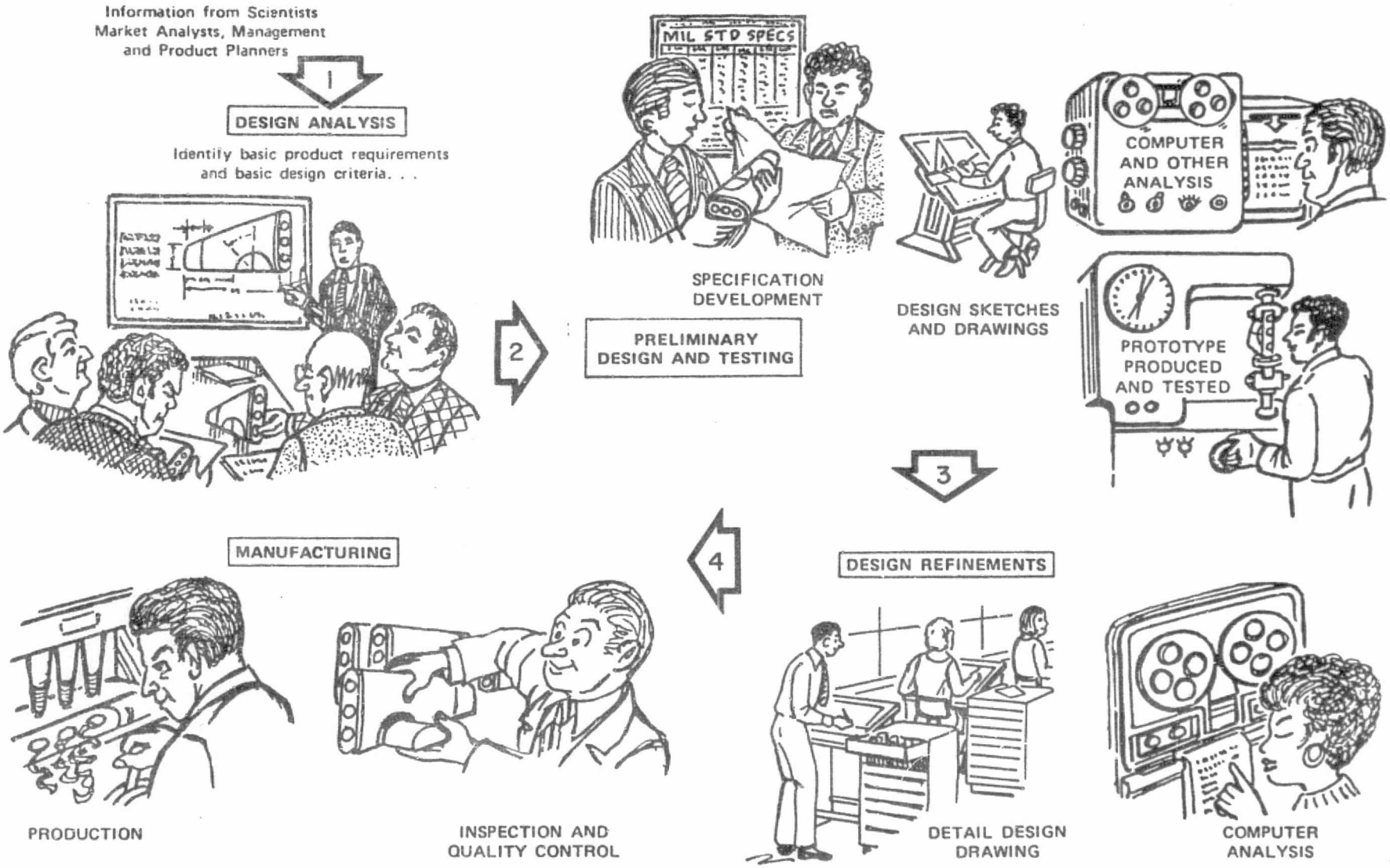

FIGURE 1

MECHANICAL ENGINEERING TECHNOLOGY

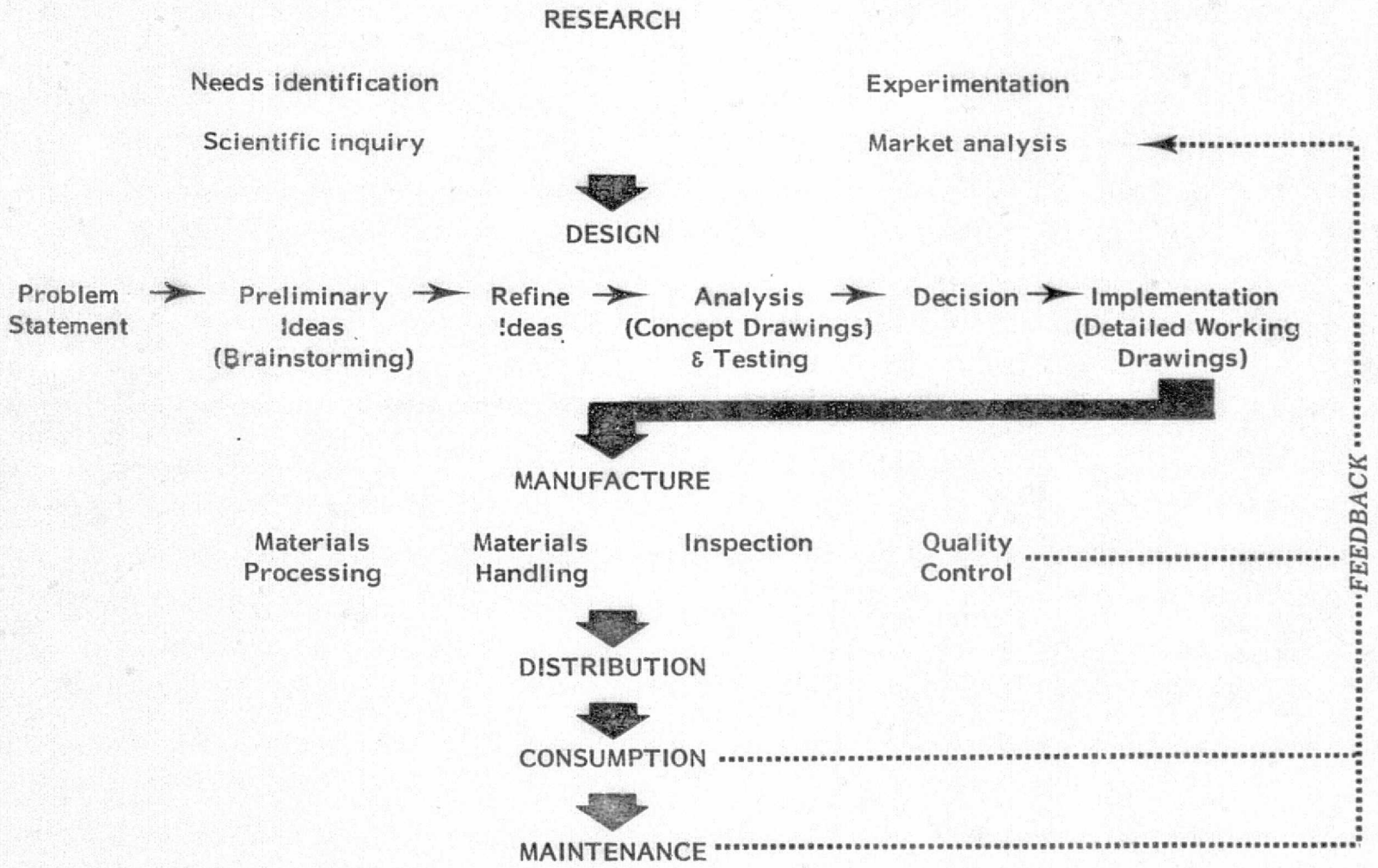

FIGURE 2

FIGURE 3

THE ENGINEERING TEAM
EDUCATION AS RELATED TO
NATURE OF WORK

POSITION ON ENGINEERING TEAM	Craftsman	Technician	Technologist	Engineer	Scientist
EDUCATION AND TRAINING	Emphasize mechanical skills ← (INCREASE)				
	(INCREASE) → Emphasize math and science				
NATURE OF WORK	Production Maintenance Machine Operation ← (INCREASE)				
	(INCREASE) →		Instruct	Design	Research

FIGURE 5

CAREER LATTICE FOR

MANUFACTURING TECHNICIAN

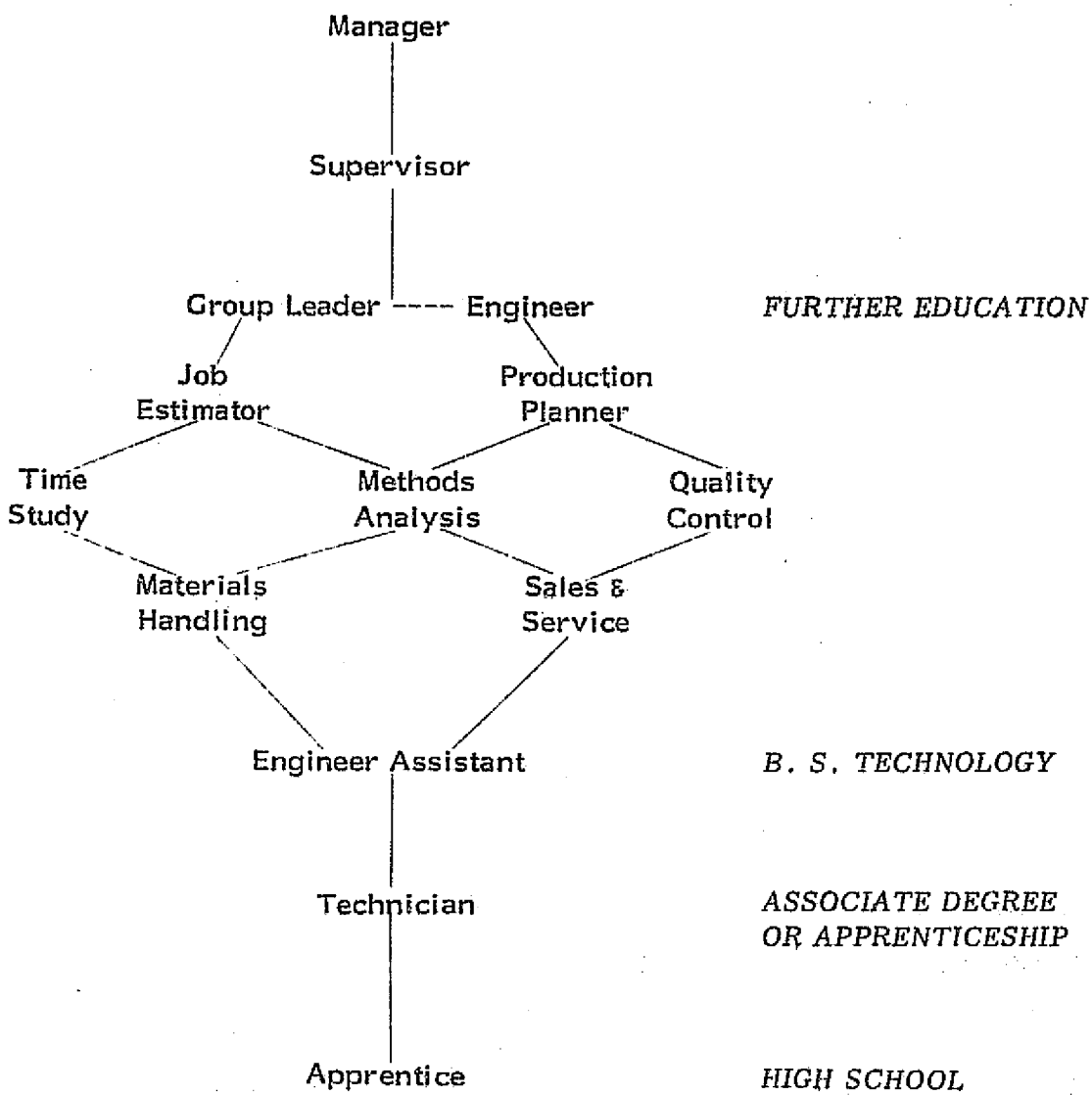

A CAREER EXPLORATION KIT
ORIENTATION TO MATERIALS TECHNOLOGY

Developed by

James A. Jacobs, Head
Mechanical Design Technology
Norfolk State College

Thomas F. Kilduff, Head
Mechanical Technology
Thomas Nelson Community College

with support of NASA Langley Research Center, Hampton, VA

1. Slide/tape presentation: Orientation to Materials Technology
2. Self-pacing Technical Education Packages (STEPs)
   (4 programed booklets that allow students to engage in exploration activities on basic materials technology and careers in technology):
   a. STEP O-1 Nature of Materials
   b. STEP O-2 Family of Materials
   c. STEP O-3 Properties of Materials
   d. STEP C-1 Careers: Mechanical Engineering Technology
   e. Instructor's and Counselor's Guide to Usage of the Technical Education Component (TEC) on Materials Technology

EXPERIMENTAL DEVICES AND KITS:

3. Rebound test device
4. Polarized stress demonstrator
5. Solid State Structures and Reactions - Experiment I

REFERENCE MATERIALS:

6. Materials - Scientific American
7. Solid State Structures and Reactions - Teachers Guide
8. Solid State Structures and Reactions - Lab Manual
9. Solid State Structures and Reactions - Summary
10. Space Resources for High School Industrial Arts
11. NASA Resources for Industrial-Technical Educators
12. Skylab Experiments - Materials Science
13. Skylab Experiments
14. NASA Facts (several publications)
15. NASA Educational Publications
16. C&P Free Films
17. Can I Be A Draftsman?
18. Can I Be A Technician?
19. Can I Be An Engineer?
20. Can I Get The Job?
21. So You Want to go to Work
22. What's It Like to be a Technician?
23. NASA Visitor Center
24. NASA Film List
25. Sources of Information on Technical Careers

The Career Exploration Kits are available for your use through Directors of Industrial Education in the following school systems:

Hampton	Norfolk
Newport News	Portsmouth
York County	Virginia Beach

Thomas Hughes, State Department of Education

For further details, contact:

James A. Jacobs, Mechanical Design Technology
Norfolk State College Phone: 623-8104

Thomas F. Kilduff, Mechanical Technology
Thomas Nelson Community College Phone: 235-3294

A CAREER EXPLORATION KIT
PLASTIC MATERIALS

Developed by

James A. Jacobs, Head
Mechanical Design Technology
Norfolk State College

Thomas F. Kilduff, Head
Mechanical Technology
Thomas Nelson Community College

with support of NASA Langley Research Center, Hampton, VA

1. Self-pacing Technical Education Packages (STEPs)
   (3 programed booklets that allow students to engage in exploration activities on basic materials technology and careers in technology):
   a. STEP P-1 Polymerization of Plastics
   b. STEP P-2 Properties of Plastics
   c. STEP C-1 Careers: Mechanical Engineering Technology
   d. Instructor's and Counselor's Guide to Usage of the Technical Education Component (TEC) on Materials Technology
2. Plastics: A Space Age Material - slide/tape presentation
3. Molecular Structure Models
4. Plastic Specimens
   a. Resin - Lucite, Zytel, Minlon, Oelrin
   b. Nomex honeycomb
   c. Oelrin 500
   d. Minlon 10B-40
   e. Plexiglas
   f. Glass reinforcers
   g. Volan
   h. Polyethelene
   i. Capran
   j. PVA
   k. Olefane
   l. Saran
   m. Kodar
   n. Kynar
   o. TX 1040 glass
   p. Mylar aluminum laminate
   q. Kaston
   r. Videne
   s. Cellophane
   t. Lexan
   u. Tedlar
   v. Kelar
   w. Zytel
   x. Lucite
   y. Bakelite
   z. Temper foam

RESOURCES:

5. Glossary of Plastics Terms
6. The Story of the Plastics Inudstry
7. Manufacturers Specifications
8. Space Resources for High School Industrial Arts
9. NASA Visitors Center
10. Technology in the Service of Man
11. Space Shuttle
12. Selected NASA Publications
13. SPI Film Catalog
14. NASA Film List
15. Can I Be A Draftsman?
16. Can I Be An Engineer?
17. Can I Be A Technician?
18. Can I Get The Job?
19. So You Want to go to Work
20. What's It Like to be a Technician?

The Career Exploration Kits are available for your use through Directors of Industrial Education in the following school systems:

Hampton	Norfolk
Newport News	Portsmouth
York County	Virginia Beach

Thomas Hughes, State Department of Education

For further details, contact:

James A. Jacobs, Mechanical Design Technology
Norfolk State College Phone: 623-8104

Thomas F. Kilduff, Mechanical Technology
Thomas Nelson Community College Phone: 235-3294

A CAREER EXPLORATION KIT
METALLIC MATERIALS

Developed by

James A. Jacobs, Head
Mechanical Design Technology
Norfolk State College

Thomas F. Kilduff, Head
Mechanical Technology
Thomas Nelson Community College

with support of NASA Langley Research Center, Hampton, VA

1. Self-pacing Technical Education Packages (STEPs)
   (3 programed booklets that allow students to engage in exploration activities on basic materials technology and careers in technology):
   a. STEP M-1 The Nature of Metals
   b. STEP M-2 Heat Treating (Thermal Processing)
   c. STEP C-1 Careers: Mechanical Engineering Technology
   d. Instructor's and Counselor's Guide to Usage of the Technical Education Component (TEC) on Materials Technology.
2. Metalworking with Aluminum - slide/tape/reference kit on aluminum
3. Metals Identification Kit
4. Solid State Structures and Reactions - Experiment II B - Heat Treatment of Steel

RESOURCES:

5. Charts - How Aluminum is Made
6. Lab Experiment with Steel
7. Flow Chart - Coal Chemicals
8. Film Catalog of Metals
9. Aluminum film catalog
10. NASA Film list
11. C&P Films
12. Basic Facts about U. S. Steel
13. Can I Be A Draftsman?
14. Can I Be An Engineer?
15. So You Want to go to Work
16. Chart on Story of Steel
17. Story of Environment & Industry
18. Uses of Aluminum
19. Story of Aluminum
20. NASA Visitors Center
21. NASA Facts & other publications
22. Space Resources for High School Industrial Arts
23. Can I Be A Technician?
24. Can I Get The Job?
25. What's It Like to be a Technician?

The Career Exploration Kits are available for your use through Directors of Industrial Education in the following school systems:

Hampton	Norfolk
Newport News	Portsmouth
York County	Virginia Beach

Thomas Hughes, State Department of Education

For further details, contact:

James A. Jacobs, Mechanical Design Technology
Norfolk State College Phone: 623-8104

Thomas F. Kilduff, Mechanical Technology
Thomas Nelson Community College Phone: 235-3294

A CAREER AWARENESS KIT
CAREERS IN ENGINEERING TECHNOLOGY

Developed by

James A. Jacobs, Head
Mechanical Design Technology
Norfolk State College

Thomas F. Kilduff, Head
Mechanical Technology
Thomas Nelson Community College

with support of NASA Langley Research Center, Hampton, VA

Components of the Kit:

1. Slide-tape presentation: Careers: Mechanical Engineering Technology - 30 minute programed presentation
2. Self-pacing Technical Education Package (STEP): Careers: Mechanical Engineering Technology - 27 page programed booklet that allows students to engage in activities which will foster an awareness of careers in engineering and engineering technology. Many references listed also.

Reference materials for career education:

3. Can I Get the Job?
4. The Engineering Team
5. Can I Be a Technician?
6. Can I Be a Draftsman?
7. Can I Be an Engineer?
8. Planning Your Career
9. So You Want to go to Work
10. What's it Like to be a Technician?
11. What's it Like to be an Engineer?
12. Kodak Engineers at Work
13. Quincy Looks Into the Future
14. A Piece of the Action
15. You Can Get a Piece of the Action
16. A Career in Metallurgy
17. Aeronautics
18. Career poster
19. Black Americans in Science and Engineering
20. Employment Outlook
21. The Metallurgical Engineering Technician
22. High School Level Information on Metals
23. NASA Langley Research Center information
24. Free films

The Career Awareness Kits are available for your use through Directors of Guidance in the following school systems:

Chesapeake
Hampton
Newport News
York County
Norfolk
Portsmouth
Virginia Beach

For further details, contact:

James A. Jacobs, Mechanical Design Technology
Norfolk State College Phone: 623-8104

Thomas F. Kilduff, Mechanical Technology
Thomas Nelson Community College Phone: 235-3294

Instructor's and Counselor's Guide to Usage of the Technical Education Component (TEC) on Materials Technology

by James A. Jacobs and Thomas F. Kilduff

Background

This country is facing a serious shortage of engineers and engineering technicians. Present college enrollments reveal the shortage will continue for at least the remainder of this decade. Paradoxically, oversubscribed enrollments in many curricula such as the social sciences and education indicate a plethora of graduates to fill limited job vacancies. In the case of the technician/technologist careers, the public seems generally uninformed of the opportunities. Minorities and females, especially, seem unaware of the rewards (financial, social esteem, and challenge) available to them as engineering technicians. Concurrent with this situation is the lack of emphasis in high school industrial education programs on engineering materials. Many students pass through three or four years of industrial arts and/or vocational education without gaining basic knowledge of the nature of materials of manufacturing even though they gain skill in materials processing. The instructional and guidance materials developed in this TEC are a product of several years of research and development by the authors. The two broad goals of the TEC are (1) to improve career awareness of and orientation to engineering technology by students and educators and (2) to provide students and educators with Self-pacing Technical Education Modules (STEMs) that present opportunities in certain phases of engineering technology.

Copies of the TEC are supplied to the school districts in the Tidewater area. If the supply of materials, such as slides, tapes, or booklets, proves to be inadequate, the authors encourage the duplication with any means available of all materials in the TEC. Please note some of the resource material, such as that developed by General Electric, General Motors, or the American Society of Metals, is available free or with minimal cost in classroom quantities; complete ordering information is listed in the Self-pacing Technical Education Packages (STEPs).

Guidance and Classroom Usage

The STEPs utilize current learning theory with emphasis on self-pacing and individualizing instruction to meet the individual needs of students. After a brief introduction by a guidance counselor or instructor, a student should be able to move through each STEP with a minimum of assistance. It may be desirable to show the slide/tape presentations to an entire class, but they are also designed for use in study carrels.

Industrial educators at the secondary school level may decide that the STEPs on materials technology are in too much detail for the majority of their students. In such a case, there are numerous activities designed to provide "hands-on" exploration of materials.

For those students who feel sufficiently motivated to meet the objectives of 2 complete STEMs (consisting of 2 to 4 STEPs), they will be awarded a "Future Technicians" certificate. Norfolk State College, Department of Mechanical Design Technology, and NASA--Langley Research Center, Educational Programs Office, will award the certificate to any student whose instructor certifies he has mastered 80% of the objectives of each STEP in any 2 STEMs. Mastery should be determined by a post-test that covers the objectives of a STEP.

TEC Organization

The Technical Education Component (TEC) is an instructional system consisting of Self-pacing Technical Education Modules (STEMs) encompassing broad topics in materials technology. These STEMs are further broken into Self-pacing Technical Education Packages (STEPs) which are self-contained units (rationale, objectives, programed learning activities, and references) that are designed for individualized instruction using discrete small segmentation to provide continuous feedback to the student and thus provide ample motivation and reinforcement. The organization into STEMs and STEPs provides this instructional system with flexibility, i.e., it is possible to add or delete STEMs or STEPs without affecting the total TEC's completeness. Also, any given STEM or STEP can be used to supplement instructional components other than this TEC, e.g., a unit on organic chemistry or the study of metals in an industrial arts course (see specific performance objectives in each STEP).

Available TEC Elements

STEM C Careers in Engineering Technology
- Slide/tape presentation - Careers in Engineering Technology: Mechanical
- STEP C-1 Careers: Mechanical Engineering Technology

STEM O Orientation to Materials
- Slide/tape presentation - Orientation to Materials Technology
- STEP O-1 Nature of Materials
- STEP O-2 Family of Materials
- STEP O-3 Properties of Materials

STEM M Metallics
- STEP M-1 The Nature of Metals
- STEP M-2 Thermal Processing (Heat Treating)
- STEP M-3 Metallic Materials, Production and Use

STEM P Plastics
- Slide/tape presentation - Plastics: A Space Age Material
- STEP O-1 Polymerization of Plastics
- STEP O-2 Properties of Plastics

STEP Elements

Rationale: This section develops the student's awareness of the importance of the STEP and should motivate him/her to study. Some slide-tape presentations are available to supplement the written rationale and give a quick review of the topics in the STEPs.

Objectives: These performance objectives detail the exact criteria on which the student will be tested in order to determine mastery of the STEPs.

Alternate Learning Activities: Individuals learn in different ways depending upon their previous experiences. Three learning approaches are supplied to them to accomplish the objectives of each STEP. The instructor may have other learning alternatives. The choice should be that of each individual student.

Pretest: Some students may already possess some or all of the competencies of these STEPs. If they feel confident, allow them to take a pretest. Should they show mastery of some objectives and not others, then they should study those areas in which they are deficient.

Learning Activities: The written material is in programed instruction based on current learning theory. Students should be equipped with paper and pencil to write down the answers to the programed questions and not write in the booklet. Please emphasize that they are not graded on these questions. Writing the answers will reinforce their learning. Encourage them to be sure of the answers before preceding. Have them pass in these sheets. Analysis of the students' answers can be used to improve the instruction. The Exercises will provide additional feedback to the student through practice. These exercises can be done by individual students, in pairs, or in small groups. It may be desirable for the sake of time to allow different teams to engage in selected exercises after which the entire class discusses the results. PLEASE CAUTION THE STUDENTS ABOUT THE NECESSITY OF SAFETY PRECAUTIONS. Refer to written instruction and expert advice about ventilation precautions plus protection of skin, eyes, etc.

Post test: This is administered when the student feels the objectives are mastered. You may wish to develop several test forms. It is recommended that the student does the grading under the instructor's supervision or watches the grading. This supplies immediate feedback and reinforces learning. Should the student not master the test (a score of 80%), then the materials, including references, can be restudied. Students should be allowed to retest as often as they wish (and is practical) until mastery is obtained.

Advanced Study: These STEPs are only introducing materials. There are many references that supply further reading plus interesting experimentation. Industry and governmental agencies offer free films and other resources that would be of general interest to the students.

USER'S EVALUATION

We are interested in improving this TEC*. Please give us your opinions.

_____
Title of material being evaluated (can be one or several STEPs** or the entire TEC

_____ _____
Name Position

_____
Address

Circle the number which best expresses your opinion. If you desire to comment, your feelings will be appreciated.

1. How would you rate the ability of this TEC to meet the objectives listed in the STEP?

   Poor 1 2 Average 3 4 Excellent 5

   Comment_____

2. If you have used this with students, how would you generalize reactions?

   Unfavorable 1 2 3 4 Favorable 5

   Comment_____

3. What strong points do you find with this TEC?

4. What weak points do you find with this TEC?

5. How did you use the TEC with your students?

6. What improvements would you suggest for this TEC?

7. Other comments that aid in the evaluation and improvement of this TEC:

8. Do you consider this TEC a valuable aid for supplementing your instruction or counseling?

   ____ Yes ____ No _____ Other

_____
* Technical Education Component
** Self-pacing Technical Education Package

Please fold, staple, & mail

JAMES A. JACOBS, HEAD
MECHANICAL DESIGN TECHNOLOGY
NORFOLK STATE COLLEGE
NORFOLK, VA 23504

Please fold, staple, and mail

A CAREER EXPLORATION KIT

ORIENTATION TO MATERIALS TECHNOLOGY

DEVELOPED AT NORFOLK STATE COLLEGE
MECHANICAL DESIGN TECHNOLOGY
BY
JAMES A. JACOBS & THOMAS F. KILDUFF
WITH THE SUPPORT OF
N.A.S.A. LANGLEY RESEARCH CENTER

POLARIZED STRESS DEMONSTRATOR

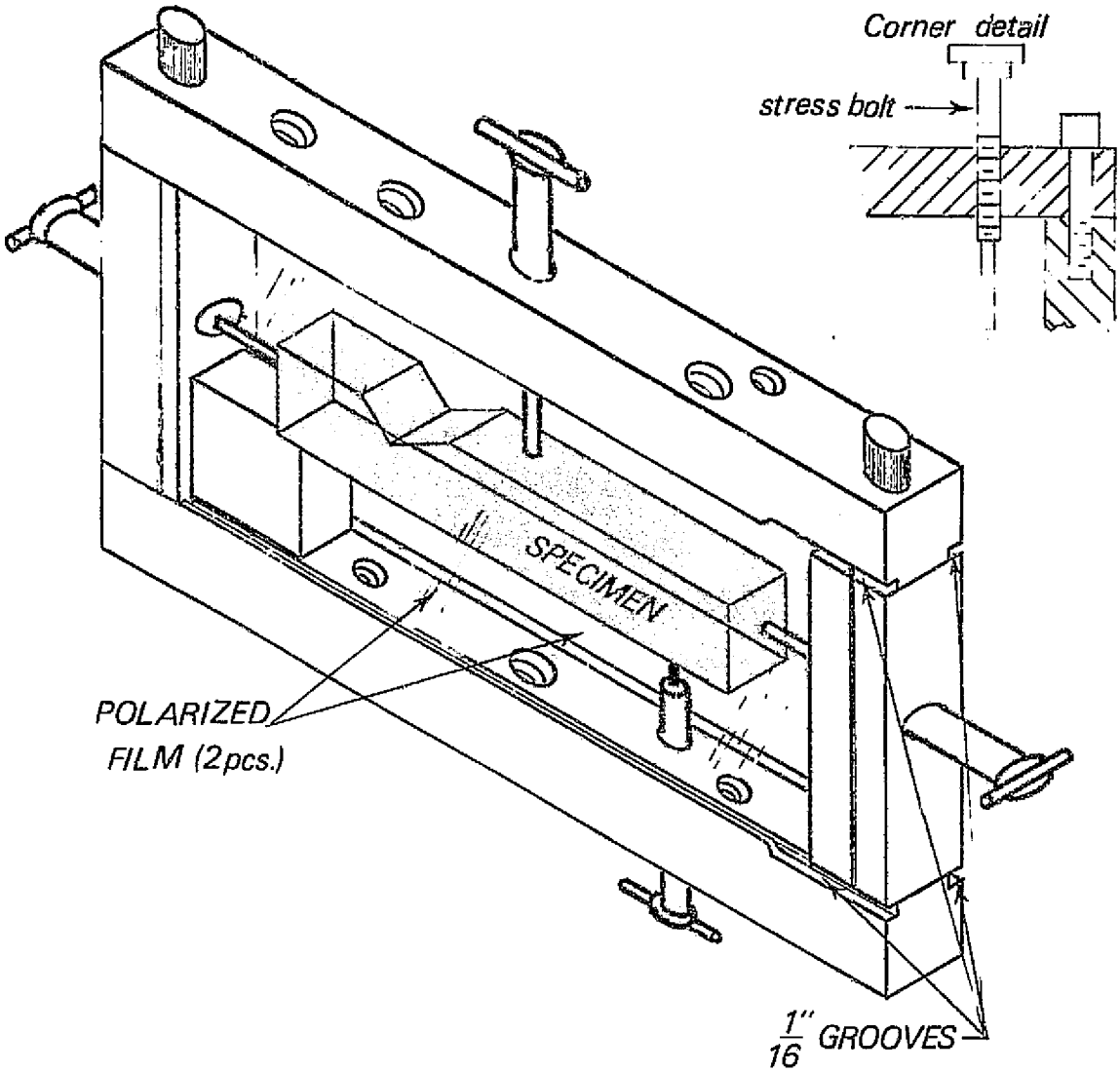

It is possible to observe stress which is the effect of force in a material with a polarized stress demonstrator. Construct a frame similar to the one shown above. The frame can be made of 5/8" square aluminum bar stock and bolted together after 1/16" grooves are milled as shown. The polarized film is inserted in grooves on both sides of the frame. Specimens of various shapes cut from ½" polarized plastic stock is mounted in the frame. Screws or bolts are used to apply stress. Notches and holes in the specimen will show stress concentrations as will points in which the specimen is placed in compression, tension, or torsion. Light is polarized through film and dramatically shows stress concentrations in various colors. The frame can be placed on an overhead projector for a group demonstration. The polarized plastic film and polarized plastic bar stock can be ordered from Photolastic Co., 67 Lincoln Highway, Malvern, PA 19355.

ACTIVITY 2: To better understand stress, try to push the eraser end of your pencil through a sheet of paper. Now try the pointed lead end. You used about the same amount of compressive force with both ends of the pencil, but the pointed end gave much more stress because the force was concentrated on a smaller area.

Strain can be permanent, and the material will take on plastic deformation when the stress (force) is released. Plastic deformation or plastic strain is a permanent change in the shape of a material. This is due to stress stretching the atomic bonds of the material until they break. If the atomic bonds hold and the part returns to its original shape when the stress is removed, we label that elastic deformation or elastic strain.

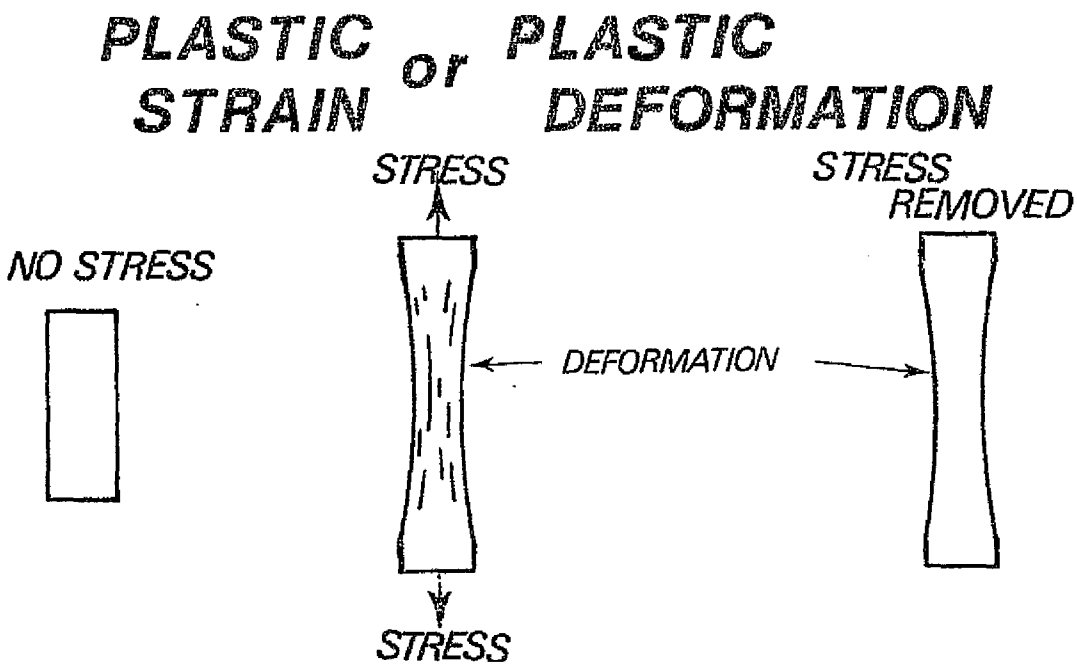

STRENGTH OF MATERIALS TESTING MACHINE *

This machine can be used to test the strength of beams in the "Beam Design Contest" or to test the strength of other specimens. It has been used to break a 12 gram beam with 85 kilograms (188 lbs.) of nails in the bucket.

Materials:

A. 1/2" - 5/8" water pipe, 4 ft. long
B. 7/16" diameter or larger rods (ring stand rods)
C. Pipe supported by heavy wire
D. Angle bracket - clamp to table
E. Paint bucket and nails for weight

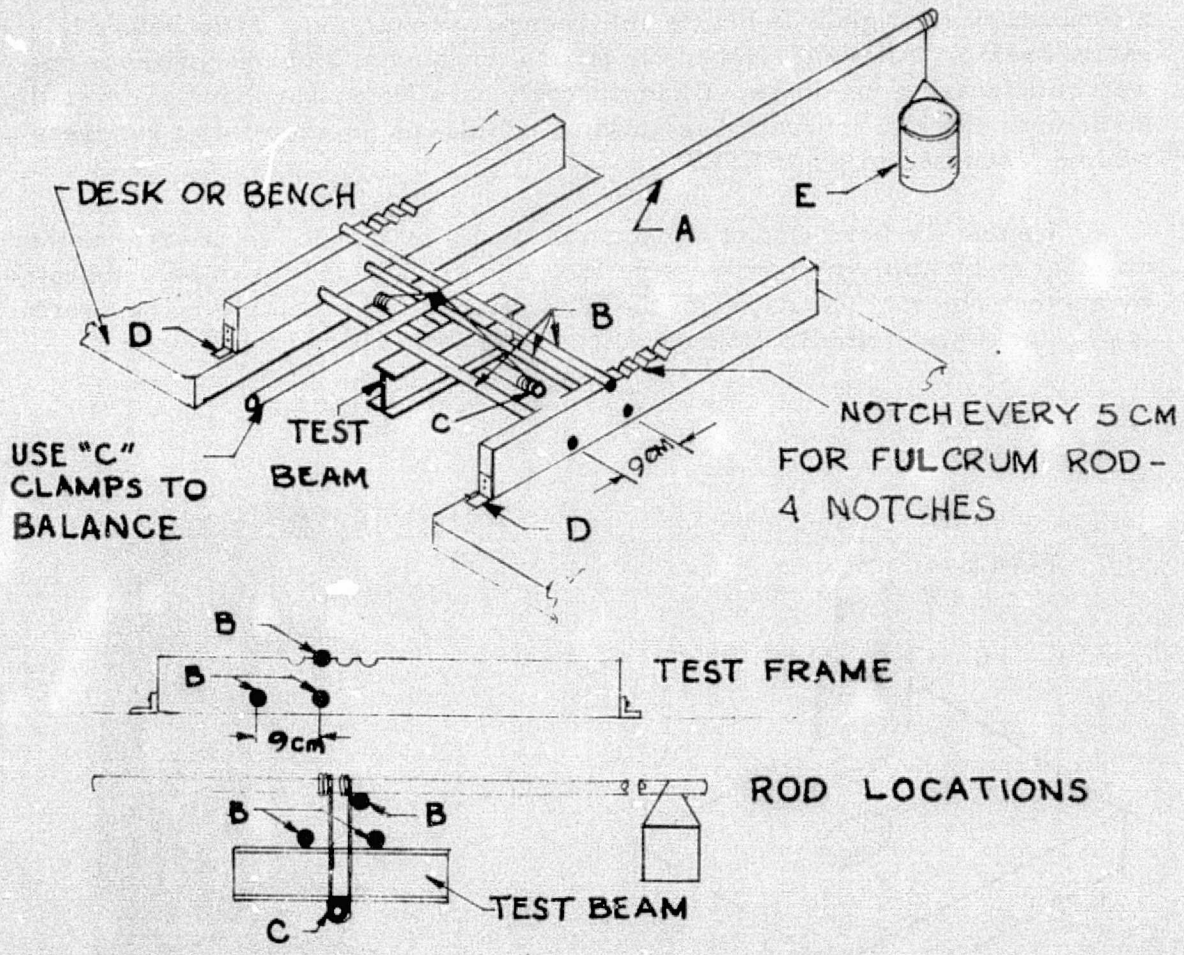

* From "Materials and Technology Curriculum Project" - T. G. Stoebe

9. Hardness (Brittleness).

A material's ability to resist penetration or abrasion (rubbing) is the property of hardness. Hardness is dependent upon bonds between crystals or molecules. For example, both diamonds and the graphite in your pencil are carbon; but the differences in the bonding and atomic structure make the diamond very hard and graphite very soft.

Carbon is a very important ingredient for making steel (an alloy of iron and carbon) hard. A very small percentage of carbon can increase the hardness of steel to a very high degree. Just adding carbon to iron and heat treating it makes the alloy very hard and brittle. Brittleness in a material causes cracking or breaking without much plastic deformation. For example, a common piece of glass is brittle and does not stretch very much before it easily breaks. Alloying elements to metals, ceramics, and composites is one way of increasing hardness. Changing polymers from amorphous to crystalline structures can also increase hardness. Techniques for increasing hardness will be discussed in other STEP's.

We test the hardness of a piece of material by scratching it with another material or by applying compressive stress to see how far it can be penetrated by another object. The names of these hardness tests include Mohs' (scratch test), Rockwell, Brinell, Vickers, Microhardness, and Scleroscope.

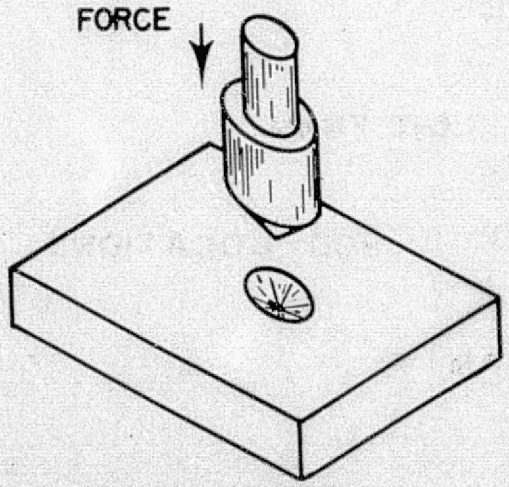

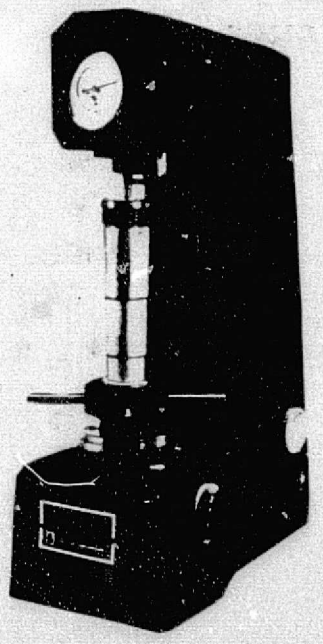

Rockwell Hardness Tester
(hardness test by penetration)

Mohs' Hardness Scale

STANDARD MINERAL	MOHS NO.	ROCKWELL NO.	BRINELL NO.	COMMON OBJECT →	TYPICAL MATERIALS
DIAMOND	10				
CORUNDUM OR SAPPHIRE	9			SPARK PLUG	CERAMICS
TOPAZ	8	C-70-80 C-65-70	745-800	CUTTING TIP SAW BLADE	TUNGSTEN CARBIDE TOOL STEEL
QUARTZ	7	C-58-65		HAND TOOL	HARDENED STEEL
FELDSPAR	6			GLASSWARE	GLASS
APATITE	5			KNIFE BLADE	STEEL
FLUORITE	4	C-20-30 B-70-90	230-280	TIN CAN PENNY	ANNEALED STEEL COPPER
CALCITE	3	H-50-80	20-45	STORM WINDOW	ALUMINUM
GYPSUM	2		10-40	FINGERNAIL	PLASTICS
TALC	1	H-20-30		SOLDER	LEAD
"TEST" WITH:	SCRATCH	'C' DIAMOND 'B' & 'H' STEEL BALL	STEEL BALL		

ACTIVITY 6: HARDNESS TESTS

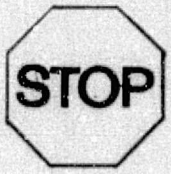

a. Study the Mohs' Hardness Scale on page 33 which compares the hardness of minerals with common objects. Obtain some of these materials and see which ones can scratch the others.

b. Construct either a "rebound" hardness tester or a "penetration" hardness tester as shown in the sketches. Collect various materials to compare their hardness.

With the penetration test, have a student stand with full weight on the steel plate or use a 20 pound weight. Measure the diameter of the indentation produced by the penetration of the ball bearing. The softer materials will allow greater penetration. However, some materials such as nylon will only elastically deform and will not retain the dent.

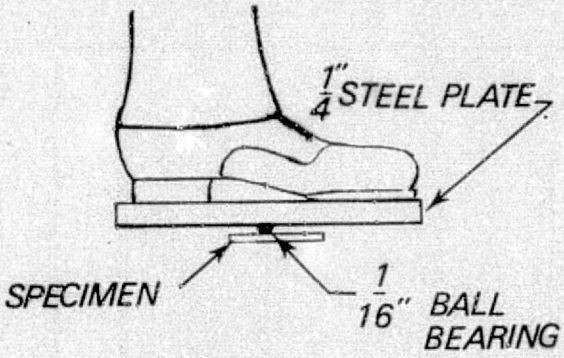

With the rebound test device, be sure the object is firmly held next to the plastic tube. Drop a ball bearing (approximately 3/8" diameter) on the object. With a grease pencil or felt tip pen, mark the height of the ball as it rebounds off the specimen. Repeat three times for each specimen. Record each height reached. Then calculate the average to insure a truer value. In this test you are measuring the elastic resistance to penetration. The higher the ball bounces, the harder the material.

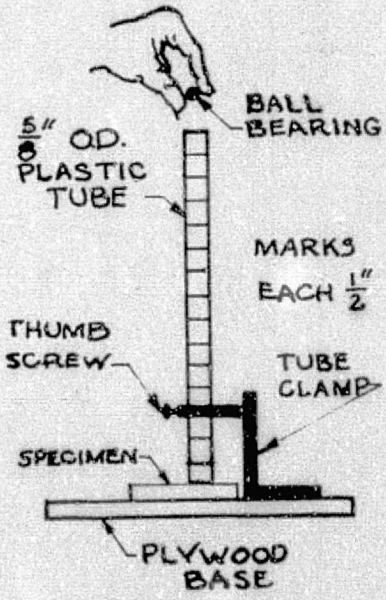

c. See references for photos, diagrams, and explanations for the following hardness tests: Rockwell, Brinell, Vickers, Microhardness, and Scleroscope.

10. Impact Strength (Toughness).

While hardness is a desirable property of a material, it does not automatically give us everything we desire in an engineering material. Remember we said earlier that glass was harder than many metals. But what happens when we hit a piece of common glass with a piece of softer material such as wood? That sudden hitting of glass, impact, usually causes it to fracture. Impact is a dynamic test of materials to determine if they are tough. Toughness or impact resistance is that ability of a material to absorb energy (sudden stress) and to plastically deform without fracturing (breaking). Contrast toughness with hardness. Hardness prevents plastic deformation

by resisting penetration when stress is applied. Toughness absorbs the energy by allowing atoms, crystals, or molecules to slip and deform. Materials that have good ductility, malleability, or plasticity are normally tough.

Later we will study how alloying can achieve both hardness and impact resistance. Also in the polymerization process, it is possible to produce a fair degree of hardness and toughness in polymers. For example, advances in plastics technology have provided eyeglass wearers with plastic lenses almost as hard as glass, but tougher and much lighter.

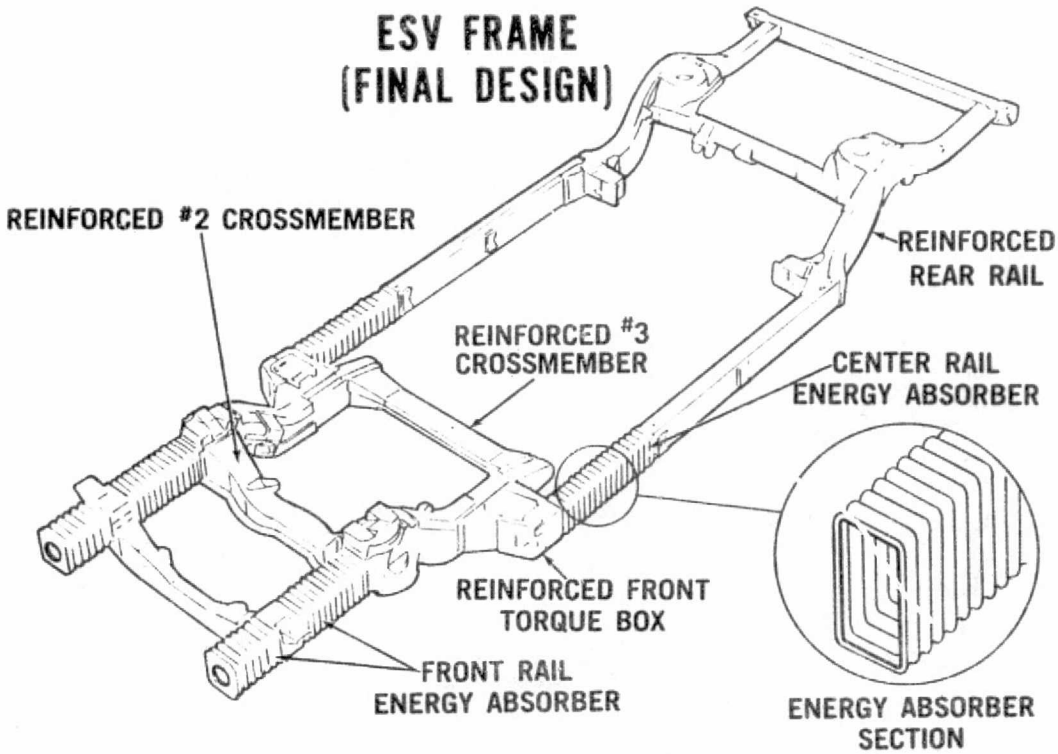

This automobile frame was designed by Ford Motors as part of the Experimental Safety Vehicle (ESV) program conducted by the U. S. Dept. of Transportation. The design is intended to absorb impact and reduce injury to the passengers.

Toughness or impact resistance is measured by impact machines that perform Izod or Charpy impact tests. These tests involve swinging a heavy weight into a specially prepared material specimen. The impact strength is a measure of the amount of energy in foot pounds (ft. lbs.) that the material absorbed as the weight sheared off the specimen.

See references for photos, diagrams, and explanations of the Izod and Charpy impact tests.

COURSE REQUIREMENTS
TEC 145 - Materials and Processes of Industry I

This course was developed on the basis of current learning theory including a belief that " . . . most students (perhaps more than 90%) can master what we have to teach them, and it is the task of instruction to find the means which will enable them to master the subject under consideration." ** Through the use of research and application of educational technology, this course is designed to insure that you master the objectives of the course--that is, pass the course. But it is up to you, the student, to follow the instructions to insure your passing.

Evaluation

There will be no guessing about what you will be responsible for to pass the tests and meet other course requirements.

1. Each module or unit of this course is broken into learning packages known as Self-pacing Technical Education Packages (STEPs). You are to read the objectives in each STEP to find out exactly on what you will be tested. Then follow the learning activities in the STEP at your own pace until you are ready to show that you have mastered the objectives covered on the post-test.

To receive a "C" grade, you must show mastery or score 80% on every post-test given. If you do not achieve an 80% on a post-test, after your problems have been diagnosed, you can recycle through the STEP and prepare for another post-test.

2. To receive a "B" grade, you must (a) master (80%) of all post-tests and (b) complete a film review or film review make-up for all but one of the films shown in the class.

3. Learning activities, in addition to programmed texts that you study, have been included in each STEP to assist you in understanding the concept being studied; you should do many of these activities.

To receive an "A" grade in the class, you must (a) master (80%) of all post-tests, (b) complete a film review on all but one film shown, and (c) accumulate 25 points for activities listed in the STEPs.

Points will be assigned to activities by the instructor and can vary from 1 point for completing some sketches to more than 5 points for conducting an experiment.

** Benjamin S. Bloom and others. Handbook on Formative and Summative Evaluation of Student Learning. New York: McGraw-Hill, 1971, pg. 43.

A Workshop for Tidewater Counselors
CAREER COUNSELING FOR TECHNICAL STUDENTS
December 3, 1975 - 9 AM to 12
Lecture Hall - Technical Center, Norfolk State College
(on corner of Park Avenue and Corprew Avenue)
Workshop Director - James A. Jacobs - Phone: 623-8104

9:00 - 9:15	Coffee & Greetings: Dr. Harrison Wilson - President, Norfolk State College Dr. James Bowser - Chairman, Dept. of Industrial Education and Technology, Norfolk State College
9:15 - 10:45	Panel Presentation: 1) Mr. Samuel J. Scott - Staff Assistant to Director - Structures, NASA Langley Research Center "The Engineering Technician" 2) Mr. B. L. Skeens - Chief Design Engineer, Design Division, Newport News Shipbuilding & Dry Dock Company "The Engineering Technician" 3) Mr. John Cook - State Supervisor of Guidance, Commonwealth of Virginia - "A Career Counseling Model" 4) Dr. Elizabeth Morgan - Director of Counseling, Norfolk State College - "The College Counselor's Perspective"
10:45 - 11:00	Interaction with audience - led by Dr. Joseph Ford, Head, Department of Technology, Norfolk State College
11:00 - 11:15	Coffee and doughnuts
11:15 - 12:00	"A Model Individualized Learning Package for the Technical Student" - James A. Jacobs, Head, Mechanical Design Technology, Norfolk State College; Thomas F. Kilduff, Head, Mechanical Technology, Thomas Nelson Community College; NSC Students

The following materials* will be given to the attending counselors to be used as a supplementary resource for their counseling:

1. A Self-pacing Technical Education Package on Careers in Engineering Technology

2. Kits of slides, tapes, film list, learning packages, resource lists, and reference books.

*Developed through a research grant from NASA Langley Research Center

The following two 30-minute programs will be shown on WHRO Channel 15 at the times indicated. The series is intended as career education for educators, counselors, students and the general public. Part I is aimed more at the adult audience; and Part II should be of interest to high school students, educators, and the general public.

For further information or to arrange another time for the airing of these programs, contact Mrs. Grace Waters, WHRO, phone: 489-9476.

CAREER COUNSELING SERIES
PART I - "A MODEL FOR CAREER COUNSELING"

Introduced by James A. Jacobs of Norfolk State College, a model for career counseling is presented by John Cook, Supervisor of Guidance, Virginia State Department of Education. Next, Dr. Elizabeth Morgan, Director of Counseling, Norfolk State College, presents the college counselor's perspective on career counseling.

To be aired:

Friday, January 2	9 AM
Tuesday, January 6	3 PM

CAREER COUNSELING SERIES
PART II - "CAREERS IN ENGINEERING TECHNOLOGY"

A group of industrial and educational representatives present slides and information on the preparation for careers in engineering technology and the nature of these careers. Panel: Thomas Kilduff, Thomas Nelson Community College; B. L. Skeens, Newport News Shipbuilding and Dry Dock Company; Samuel Scott, NASA - Langley Research Center; and James A. Jacobs, Norfolk State College. Viewers are given information on how to obtain resources related to career education.

To be aired:

Tuesday, January 13	8:30 AM
Wednesday, January 14	11:25 AM

A Workshop for Tidewater Industrial/Technical Educators
IMPLEMENTING INDIVIDUALIZED INSTRUCTION IN INDUSTRIAL/TECHNICAL EDUCATION
December 15, 1975 - 7 to 10 PM
Lecture Hall - Technical Center, Norfolk State College
(on corner of Park Avenue and Corprew Avenue)
Workshop Director - James A. Jacobs - Phone: 623-8104

7:00 - 7:15 PM	Greeting: Dr. James Bowser, Chairman Department of Industrial Education and Technology Dr. Joseph Ford, Head Department of Technology
7:15 - 8:00 PM	"Implementing Individualized Instruction in Industrial/Technical Education" Dr. Paul W. DeVore Technology Education Program West Virginia University Morgantown, West Virginia 26506
8:00 - 9:00 PM	Group activity & reaction to Dr. DeVore's presentation - Group leaders: Mr. Thomas Hughes - State Industrial Arts Supervisor Mr. Clifton Randolph - Great Bridge Industrial Arts Dept. Dr. Arlington Chisman - Hampton City Schools Director of Vocational Education Mr. Armand Taylor - Virginia Beach City Schools Industrial Arts Supervisor Dr. Joseph Ford
9:00 - 9:15 PM	Coffee and doughnuts
9:15 - 10:00 PM	"A Brief Explanation of a Technical Education Component (TEC) on Materials Technology" James Jacobs and Thomas Kilduff

The following materials* will be passed out for use as supplementary teaching resources:

1. Self-pacing Technical Education Packages on Materials Technology

2. Kits of slides, tapes, specimens, film list, learning packages, demonstration devices, resource lists, and reference books on materials technology and industrial arts.

*Developed through a research grant from NASA Langley Research Center

JUROR'S EVALUATION OF STEP* ON
BASIC MATERIALS SCIENCE

TITLE OF STEP _____ DATE _____

EVALUATOR'S NAME _____ JOB TITLE OR POSITION _____

JOB CLASSIFICATION (e.g., engineer, technicians, etc.) _____ YEARS OF EXPERIENCE IN FIELD AND LEVEL OF EDUCATION _____

PROFESSIONAL MEMBERSHIPS _____

(Please use back to elaborate on comments)

1. Are the objectives appropriate?

1	2	3	4	5
very much				inappropriate

COMMENT _____

2. Is the information accurate?

5	4	3	2	1
inaccurate				accurate

COMMENT _____

3. What weakness do you find in this STEP?

4. What strengths do you find in this STEP?

5. How would you improve this STEP?

6. Other comments:

* Self-pacing Technical Education Package

USER'S EVALUATION

We are interested in improving this TEC*. Please give us your opinions.

_____
Title of material being evaluated (can be one or several STEPs** or the entire TEC

_____ _____
Name Position

_____
Address

Circle the number which best expresses your opinion. If you desire to comment, your feelings will be appreciated.

1. How would you rate the ability of this TEC to meet the objectives listed in the STEP?

   Poor 1 2 Average 3 4 Excellent 5

   Comment_____

2. If you have used this with students, how would you generalize reactions?

   Unfavorable 1 2 3 4 Favorable 5

   Comment_____

3. What strong points do you find with this TEC?

4. What weak points do you find with this TEC?

5. How did you use the TEC with your students?

6. What improvements would you suggest for this TEC?

7. Other comments that aid in the evaluation and improvement of this TEC:

8. Do you consider this TEC a valuable aid for supplementing your instruction or counseling?

   _____ Yes _____ No _____ Other

* Technical Education Component
** Self-pacing Technical Education Package

Please fold, staple, & mail

JAMES A. JACOBS, HEAD
MECHANICAL DESIGN TECHNOLOGY
NORFOLK STATE COLLEGE
NORFOLK, VA 23504

Please fold, staple, and mail

APPENDIX C

CONSULTANT'S EVALUATION
STUDENTS' EVALUATION
BUDGET

An Evaluation Report
on
"A Research Project to Develop and Evaluate a Technical Education Component on Materials Technology for Orientation to Space Age Tecnnology"
(NASA GRANT NSG-1073)
by
Paul W. DeVore

December 22, 1975

The following report constitutes a summary of selected factors considered critical to the research project and discussed in detail with James A. Jacobs and Thomas F. Kilduff, project investigators, on December 15, 1975.

I. General Assessment

The project overall is well conceived and developed. The goal of the project, namely, "Produce a prototype Self-pacing Technical Education Module on basic materials technology that can be tested in high school and freshman college classes to determine its ability to orient young people, especially females and minorities, to space age materials while motivating them to pursue careers in mechanical technology," was achieved.

The organization of the program into several STEMs (Self-pacing Technical Education Modules) including (1) Careers in Engineering Technology, (2) Orientation to Materials, (3) Metallics, and (4) Plastics provides a well structured easily understood and manageable teaching-learning package.

The learning modules are designed to attain the goal of self-pacing. Although data from field testing is limited in this aspect, indications are that the self-pacing will work. The problem of testing the program, as designed, concerns limitations inherent in traditional scheduling modes extant with current administrative practice. Full utilization of the program will require changes in the administrative structure of the institutions using individualized instruction, changes in the structure of on-going curriculums and the retraining of teachers. With respect to the latter, it was obvious that special training programs will need to be established to teach teachers how to manage the STEP program and the materials associated with the system. Also, the efficiency of a program such as STEP will depend in large measure on the development of a hierarchy of personnel specially trained to function in specialized roles required by the system in a continuous use mode.

With respect to teachers, it is the experience of this consultant that high school teachers are extremely limited in their knowledge and understanding of materials. Therefore, retraining of teachers will be a critical variable in the success of the system.

II. Specific Assessments

STEM C Careers in Engineering Technology slide/tape presentation

In general, the slide/tape presentation meets the goal of career awareness for mechanical technology.

It is recommended that attention be given to the following factors:

1. Quality of the slides.
2. Pace of the tape recording.
3. Amount of detail. This is perhaps the most critical factor. It is recommended that the slide/tape presentation be revised and divided into one overall presentation on careers in general followed by separate slide/tape presentations on specific careers within engineering. Sections on materials, materials testing, investment castings, and other categories are too specific for the goal of the slide/tape.
4. Omit scientist section. Scientists are seldom direct members of an engineering team.
5. Omit research section, particularly that reference on "how to do research." "How to do research" would be another slide/tape presentation.
6. Length. In general, a 10- to 12-minute time period is best for the target group of the project. See recommendation 3 above.
7. Communication skills. These skills are critical to any career. It is recommended that more time and attention be focused on this section or a special section prepared.
8. Engineering Design Team. This topic is rather complex and probably should be presented as a separate topic.

STEM P Plastics
Slide/tape presentation--Plastics

The slide/tape presentation on Plastics serves as a good introduction to plastics as a space age material. A well developed introductory unit.

Attention should be given to the following items:

1. Quality of slides.
2. Entry level knowledge of students. The unit on molecular structure does present a rather rapid transition.
3. Pace of tape. May be too fast. Many new terms are introduced. The presentation moves from an information only presentation to a technical discussion.
4. Length of Unit. Probably could be divided into several units including an introductory unit. For instance, if the goal is to teach about the selection of a correct plastic material for a given application, then a separate slide/tape presentation would be appropriate. Same with topic on oil and conservation. So too the use of plastics by NASA.
5. What are plastics? This should be a separate unit of 10-12 minutes in length.

The idea of a slide/tape presentation to accompany the Self-pacing Technical Education Packages is excellent and the effort should be continued.

III. STEPs

General Comments

The STEPs are well designed and contain good illustrations of specific concepts relating to materials.

The primary recommendation for improvement, contingent on the results of field testing, is that consideration be given to revising the manner in which the objectives are stated. Some statements listed under objectives are not objectives. They are activities for students. It may be of assistance if the STEPs were organized as follows.

1. Statement of Rationale of Area of Study.
2. Statement of Overall Goals. Specific Goals.
3. Selection of instructional objectives and sub-objectives which will assist in attainment of goals.
4. Selection of activities for the attainment of each sub-objective and objective.
5. Determination of level of attainment expected by each student as a base for development of evaluation procedures.
6. Focus on "what a student will know and be able to do" at the completion of each part of the program as well as each part of the program of study.

It is also recommended that the introduction to the STEPs focus on the concepts being taught. For instance,

deformation is a sub-concept relating to overall or general concepts about atomic and crystal structure. By revising the STEP program to focus on concepts, the overall efficiency of the packages will be improved. Objectives will be logically identified as will the activities to accomplish the objectives.

IV. Other Recommendations and Comments

A. The program of study should be further developed and field tested with several levels of students.

B. The evaluation of the program will necessarily be non-parametric in the development stages. During the development stage a controlled test-re-test statistical analysis is premature. What is being developed is a unique system which should not be hampered by excessive statistical analysis at this stage of development.

C. The next stage of development should be the refinement of the system and the testing of the system against the objectives. It is for this reason that it is recommended that the objectives be rewritten. In their present form, for the most part, no appropriate assessment procedures can be designed.

D. Each STEP should contain statements about what a student will know and be able to do after completion of the unit or sub-unit of study.

E. Funds should be provided for (a) the revision and refinement of the STEPs, (b) field testing of the revisions, and (c) evaluation of the effectiveness of the STEPs measured against the goals and objectives of the program.

F. Finally, it is highly recommended that efforts be continued to implement and test the program in public schools and colleges.

Submitted by Paul W. DeVore
December 22, 1975

TABLE XI
SUMMATION OF NORFOLK STATE COLLEGE STUDENTS'
EVALUATION OF STEP C-1

1. How would you rate the ability of this STEP to teach you?

Poor		Average		Excellent
1	2	3	4	5
0%	2%	56%	38%	4%

2. Were the objectives or reasons for studying this STEP clear to you?

Unclear		Fairly Clear		Very Clear
1	2	3	4	5
0%	6%	30%	43%	21%

3. Were the technical words well explained?

Poor		Average		Excellent
1	2	3	4	5
0%	6%	34%	41%	19%

4. Were the exercises useful in understanding this subject?

Poor		Average		Excellent
1	2	3	4	5
0%	6%	28%	51%	15%

5. How would you compare this type of teaching material to regular textbooks?

Worse		Same		Better
1	2	3	4	5
0%	15%	19%	31%	35%

9. Check the statement which best describes the way the entire STEP was written.

0% too much jargon
44% well written
6% confusing
2% poorly written
38% concise and to the point
10% other _____

TABLE XII
SUMMATION OF NORFOLK STATE COLLEGE STUDENTS'
EVALUATION OF STEP O-1

1. How would you rate the ability of this STEP to teach you?

Poor		Average		Excellent
1	2	3	4	5
0%	2%	42%	45%	11%

2. Were the objectives or reasons for studying this STEP clear to you?

Unclear		Fairly Clear		Very Clear
1	2	3	4	5
0%	0%	27%	44%	29%

3. Were the technical words well explained?

Poor		Average		Excellent
1	2	3	4	5
0%	2%	33%	41%	24%

4. Were the exercises useful in understanding this subject?

Poor		Average		Excellent
1	2	3	4	5
0%	4%	38%	47%	11%

5. How would you compare this type of teaching material to regular textbooks?

Worse		Same		Better
1	2	3	4	5
0%	2%	24%	36%	38%

9. Check the statement which best describes the way the entire STEP was written.

0% too much jargon
45% well written
4% confusing
0% poorly written
38% concise and to the point
13% other _____

TABLE XIII
SUMMATION OF NORFOLK STATE COLLEGE STUDENTS'
EVALUATION OF STEP O-2

1. How would you rate the ability of this STEP to teach you?

Poor		Average		Excellent
1	2	3	4	5
0%	2%	31%	44%	23%

2. Were the objectives or reasons for studying this STEP clear to you?

Unclear		Fairly Clear		Very Clear
1	2	3	4	5
0%	0%	18%	49%	33%

3. Were the technical words well explained?

Poor		Average		Excellent
1	2	3	4	5
0%	4%	29%	36%	31%

4. Were the exercises useful in understanding this subject?

Poor		Average		Excellent
1	2	3	4	5
0%	4%	31%	51%	14%

5. How would you compare this type of teaching material to regular textbooks?

Worse		Same		Better
1	2	3	4	5
2%	0%	18%	40%	40%

9. Check the statement which best describes the way the entire STEP was written.

0% too much jargon
73% well written
0% confusing
0% poorly written
27% concise and to the point
0% other _____

TABLE XIV
SUMMATION OF NORFOLK STATE COLLEGE STUDENTS'
EVALUATION OF STEP O-3

1. How would you rate the ability of this STEP to teach you?

Poor 1	2	Average 3	4	Excellent 5	Blank
0%	11%	47%	37%	5%	0%

2. Were the objectives or reasons for studying this STEP clear to you?

Unclear 1	2	Fairly Clear 3	4	Very Clear 5	
0%	5%	32%	36%	24%	3%

3. Were the technical words well explained?

Poor 1	2	Average 3	4	Excellent 5	
0%	0%	47%	40%	13%	0%

4. Were the exercises useful in understanding this subject?

Poor 1	2	Average 3	4	Excellent 5	
0%	0%	32%	57%	11%	0%

5. How would you compare this type of teaching material to regular textbooks?

Worse 1	2	Same 3	4	Better 5	
0%	8%	26%	46%	20%	0%

9. Check the statement which best describes the way the entire STEP was written.

5% too much jargon
41% well written
5% confusing
3% poorly written
24% concise and to the point
8% other _____

TABLE XV
SUMMATION OF NORFOLK STATE COLLEGE STUDENTS' EVALUATION OF STEP P-1

1. How would you rate the ability of this STEP to teach you?

Poor 1	2	Average 3	4	Excellent 5
0%	3%	44%	47%	6%

2. Were the objectives or reasons for studying this STEP clear to you?

Unclear 1	2	Fairly Clear 3	4	Very Clear 5
0%	0%	34%	47%	19%

3. Were the technical words well explained?

Poor 1	2	Average 3	4	Excellent 5
3%	11%	32%	46%	8%

4. Were the exercises useful in understanding this subject?

Poor 1	2	Average 3	4	Excellent 5
0%	0%	53%	33%	14%

5. How would you compare this type of teaching material to regular textbooks?

Worse 1	2	Same 3	4	Better 5
0%	7%	30%	41%	22%

9. Check the statement which best describes the way the entire STEP was written.

39% too much jargon
22% well written
0% confusing
0% poorly written
30% concise and to the point
0% other _____
9% blank

TABLE XVI
SUMMATION OF NORFOLK STATE COLLEGE STUDENTS'
EVALUATION OF STEP P-2

1. How would you rate the ability of this STEP to teach you?

Poor 1	2	Average 3	4	Excellent 5	Blank
6%	17%	34%	31%	9%	3%

2. Were the objectives or reasons for studying this STEP clear to you?

Unclear 1	2	Fairly Clear 3	4	Very Clear 5	
10%	6%	31%	25%	25%	3%

3. Were the technical words well explained?

Poor 1	2	Average 3	4	Excellent 5	
0%	17%	37%	20%	23%	3%

4. Were the exercises useful in understanding this subject?

Poor 1	2	Average 3	4	Excellent 5	
5%	5%	32%	35%	17%	6%

5. How would you compare this type of teaching material to regular textbooks?

Worse 1	2	Same 3	4	Better 5	
6%	11%	26%	28%	26%	3%

9. Check the statement which best describes the way the entire STEP was written.

0% too much jargon
15% well written
45% confusing
0% poorly written
25% concise and to the point
0% other _____
15% blank

TABLE XVII
SUMMATION OF NORFOLK STATE COLLEGE STUDENTS' EVALUATION OF STEP M-1

1. How would you rate the ability of this STEP to teach you?

Poor		Average		Excellent
1	2	3	4	5
0%	8%	36%	37%	19%

2. Were the objectives or reasons for studying this STEP clear to you?

Unclear		Fairly Clear		Very Clear
1	2	3	4	5
0%	3%	23%	40%	34%

3. Were the technical words well explained?

Poor		Average		Excellent
1	2	3	4	5
0%	13%	19%	41%	27%

4. Were the exercises useful in understanding this subject?

Poor		Average		Excellent
1	2	3	4	5
0%	5%	31%	38%	26%

5. How would you compare this type of teaching material to regular textbooks?

Worse		Same		Better
1	2	3	4	5
0%	0%	10%	49%	41%

9. Check the statement which best describes the way the entire STEP was written.

2% too much jargon
52% well written
13% confusing
0% poorly written
20% concise and to the point
2% other _____
11% blank

TABLE XVIII
SUMMATION OF NORFOLK STATE COLLEGE STUDENTS'
EVALUATION OF STEP M-2

1. How would you rate the ability of this STEP to teach you?

Poor 1	2	Average 3	4	Excellent 5
9%	27%	36%	27%	1%

2. Were the objectives or reasons for studying this STEP clear to you?

Unclear 1	2	Fairly Clear 3	4	Very Clear 5
9%	36%	18%	36%	1%

3. Were the technical words well explained?

Poor 1	2	Average 3	4	Excellent 5
27%	9%	36%	27%	1%

4. Were the exercises useful in understanding this subject?

Poor 1	2	Average 3	4	Excellent 5
0%	20%	50%	30%	0%

5. How would you compare this type of teaching material to regular textbooks?

Worse 1	2	Same 3	4	Better 5
0%	0%	55%	36%	10%

9. Check the statement which best describes the way the entire STEP was written.

9% too much jargon	0% poorly written
55% well written	18% concise and to the point
0% confusing	18% other _____

STUDENT EVALUATION OF TEACHING

Instructor: _____ Course: _____
Instructor's Name Course Listing

Using the scale A=Excellent, B=Good, C=Average, D=Poor, F=Failing, rate your instructor on each item by circling the letter that most nearly expresses your view. Add Comments.

1.	Does your instructor seem to enjoy teaching your class?	A B C D F
2.	Does your instructor appear to know his subject matter?	A B C D F
3.	Does your instructor seem enthusiastic about teaching?	A B C D F
4.	Is your instructor concerned about your learning?	A B C D F
5.	Does your instructor seem concerned about the feelings of the students in your class?	A B C D F
6.	Is the class time well used?	A B C D F
7.	Are the tests given by your instructor consistent with class presentations or objectives?	A B C D F
8.	Do you look forward to coming to this class?	A B C D F
9.	Does your instructor appear to be aware of current developments in the subject area?	A B C D F
10.	Do you feel that the instructor grades you fairly?	A B C D F
11.	Does your instructor encourage you to seek his help?	A B C D F
12.	How well are class presentations organized?	A B C D F
13.	Is the instructor fair in his dealing with you?	A B C D F
14.	Did your instructor stimulate your interest in this subject?	A B C D F
15.	Would you be hesitant to express an idea contrary to that of your instructor's?	YES NO
16.	How would you rate the teaching effectiveness of your instructor?	A B C D F

Please give your suggestions for ways to improve this class (use back of page).

PHASE ONE

Budget - July 1, 1974 - December 1, 1974

I.	Personnel:			
	A. James A. Jacobs	$ 7,500.00	75%	
	B. Thomas Kilduff	4,250.00	50%	
	C. Typist	2,700.00		
	D. 2 student assistants for 10 hours/week @ $3.00 p/hr.	1,560.00		
	E. Fringe Benefits @ 12% (excluding student assistants)	1,734.00		
	Personnel Total			$17,744.00
II.	Services and Materials			
	A. 35mm film and processing	425.00		
	B. Audio tape and processing	250.00		
	C. Illustrations and binding, printing	950.00		
	D. Paper, magnetic cards, and miscellaneous office supplies	435.00		
	E. Travel	747.00		
	F. Telephone	155.00		
	Services and Materials Total			2,962.00
III.	Equipment			
	A. 35mm copy camera and accessories	850.00		
	B. IBM Mag Card Executive (Rental @ $235/mo.)	1,410.00		
	C. Cassette tape recorder/pulser and duplicator	925.00		
	D. 35mm projector	283.00		
	E. Cassette tape player (2)	92.00		
	Equipment Total			3,560.00
	Total - Direct Cost			24,266.00
	Indirect Costs @ 34.2% of total Direct Costs. Negotiated rate with N.S.F. as negotiator. $8,298.97			
	NASA Share	3,639.90		
	Norfolk College Cost Sharing	4,659.07		
	TOTAL PHASE I			$27,905.97

Phase Two
Budget
January 1, 1975-July 31, 1975

I. Personnel

A.	Project Director (three-fourths time)	$ 6,228.00	
B.	Assistant Researcher	4,970.00	
C.	Typist (part-time to meet project needs)	2,060.00	
D.	Fringe Benefits @ 12% for A, B & C	1,591.00	
E.	One student laboratory assistant	675.00	
F.	Fringe Benefits for student @ 5.85%	40.00	
	Personnel Total		15,564.00

II. Services and Materials

A. Services

1.	35mm slide duplication	443.00	
2.	audio tape conversion	245.00	
3.	composing and editing	75.00	
4.	illustrations	160.00	
5.	kit fabrication	185.00	
6.	printing, graphics and packaging	1,500.00	
7.	travel	850.00	
8.	telephone	191.00	
	Services Total	3,649.00	

B. Materials

1.	35mm film	250.00	
2.	audio tape	175.00	
3.	demonstration material	314.00	
4.	mag cards	49.00	
5.	metallic and non-metallic specimens	250.00	
6.	prepared audio visual kits	350.00	
7.	office supplies & resource material	135.00	
	Materials Total	1,523.00	
	Services & Materials Total		5,172.00

III. Equipment

A.	Mag Card Word Processor (rental @ $235/mo)	1,410.00	
B.	Calculator and Recorder and camera accessories	429.00	
C.	Testing Equipment	750.00	
	Equipment Total		2,589.00

Total Direct Cost	23,325.00
Indirect Cost @ 31.4% of salaries & wages (negotiated with NSF)	4,347.00
Total Project Cost	27,672.00
Norfolk State College Cost Sharing	2,174.00
Amount Requested from NASA	25,498.00

Requested Initial Payment
Amount Requested During 1st Quarter (Jan. 1 - March 31, 1975) $10,991.00

PHASE THREE
BUDGET
August 1, 1975 - December 31, 1975

I. Personnel

A.	Project Director (three-fourths time)	$ 6,750.00	
B.	Assistant Researcher	5,277.00	
C.	Typist (part-time to meet project needs)	2,521.00	
D.	Fringe Benefits @ 12% for A, B & C	1,746.00	
E.	One student laboratory assistant	1,360.00	
F.	Fringe Benefits for student @ 5.85%	80.00	
	Personnel Total		17,734.00

II. Services and Materials

A. Services

1.	35mm slide duplication	1,152.00	
2.	audio tape conversion	245.00	
3.	composing and editing	225.00	
4.	illustrations	320.00	
5.	kit fabrication	275.00	
6.	printing, graphics and packaging	2,738.00	
7.	travel	978.00	
8.	telephone	187.00	
9.	evaluation consultant	300.00	
	Services Total	6,420.00	

B. Materials

1.	35mm film	500.00	
2.	audio tape	175.00	
3.	demonstration material	478.00	
4.	mag cards	50.00	
5.	metallic and non-metallic specimens	250.00	
6.	prepared audio visual kits & publications	400.00	
7.	office supplies & resource materials	189.00	
	Materials Total	2,042.00	
	Services & Materials Total		8,462.00

III. Equipment

A. Mag Card Word Processor (rental @ $235/mo)	1,645.00	
B. Photographic & Recorder Accessories	470.00	
C. Testing Equipment	450.00	
Equipment Total		2,565.00
Total Direct Cost		28,761.00
* Indirect Cost @ 31.4% of salaries & wages (negotiated with DHEW - predetermined - 7/1/74 through 6/30/76)		4,995.00
Total Project		33,756.00
Norfolk State College Cost Sharing		2,661.00
Amount Requested from NASA		31,095.00
Requested Initial Payment Amount Requested During 1st Quarter (July 1 - Sept. 30, 1975)		$14,222.00

(The amount of this initial request reflects the accelerated work effort that will be employed during the summer months in order to prepare materials for field testing at the opening of school in the fall.)

Authorization is requested for acceleration of expenditures to commence August 1, 1975.

*Fringe benefits for A, B, C, & E have been reduced ($574)