LMSC-HREC TR D496705

Lockheed

Missiles & Space Company, Inc.

HUNTSVILLE RESEARCH & ENGINEERING CENTER

Cummings Research Park
4800 Bradford Drive,
Huntsville, Alabama

APPLICATIONS STUDY OF AERO-MANEUVERING ORBIT-TO-ORBIT SHUTTLE (AMOOS)

EXECUTIVE SUMMARY

January 1976

Contract NAS8-31452

Prepared for National Aeronautics and Space Administration
Marshall Space Flight Center, Alabama 35812

by

John White

APPROVED: C. Donald Andrews

C. Donald Andrews, Lead Engineer
Flight Mechanics Group

B. Hobson Shirley

B. Hobson Shirley, Supervisor
Engineering Sciences Section

J. S. Farrior

J.S. Farrior
Resident Director

FOREWORD

The work reported herein was performed by the Lockheed-Huntsville Research & Engineering Center for the Payload Studies Office of Program Development, Marshall Space Flight Center under Contract NAS8-31452. The MSFC technical monitor for this study is Mr. J.P. Hethcoat, PS04.

ACKNOWLEDGMENTS

The author thanks Messrs. L.B. Brandon, B.A. Neighbors and A.C. Young of Program Development, MSFC, for their suggestions and discussions of the AMOOS and AMRS concepts and applications. The author is also grateful for the technical support and contributions during the analysis effort by the following Lockheed-Huntsville personnel: D.A. Love, W.G. Dean, Dr. A. Wernli, W.E. Jones and Z.S. Karu.

SUMMARY

The results of the Applications Study of the Aeromaneuvering Orbit-to-Orbit Shuttle (AMOOS) and the Aeromaneuvering Recovery System (AMRS) are summarized. Preliminary designs and the supporting analysis for both AMOOS and AMRS are presented. The AMOOS design is shown to yield from twice to almost three times the high energy, round-trip payloads as a purely propulsive vehicle of the same all up weight. Typically AMOOS can perform a crew rotation mission to equatorial geosynchronous orbit in one Space Shuttle launch. The weight of the manned module designed for this mission is 6800 lb, which is approximately 300 lb below the AMOOS round-trip payload capability. AMOOS can also place the 11,250 lb (12,000 lb with crew) AMRS on station in equatorial geosynchronous orbit. This represents a 40% increase in payload delivery capability over the Baseline Space Tug.

The model flight test program analysis has yielded a 10 ft long, 1,500 lb vehicle that can demonstrate the feasibility of aeromaneuvering. The major parameters such as maximum dynamic pressure, heating rates, guidance, stability and recovery can be modeled or demonstrated as is appropriate. Two model flight schedules were developed, one consisting of four flights and the other of two flights. The former is considered a very low risk, high information return program whereas the latter is a minimal cost program consistent with reasonable data returns and chance of success.

The AMOOS and AMRS guidance scheme developed using linear regulator theory proved a precise and accurate guidance scheme. Both it and a classical linear systems based scheme were evaluated using 65 simulated trajectories in which the position in the entry corridor and the atmospheric density were varied randomly. The latter was varied randomly at each

integration time step with due allowance made for correlation in density from point to point. The linear regulator approach also proved adequate for the AMRS ground recovery guidance.

Two areas were recommended for further study. These are: (1) navigation and guidance area, and (2) alternate configurations. The objective of the first task would be to match navigation hardware against AMOOS and AMRS requirements and evaluate the alternatives using the AMOOS and AMRS guidance simulation. Under the second task, the alternate configurations for AMOOS would be considered. These may include such items as AMOOS payload performance using a hybrid engine, changes in external geometry, and heavy lift vehicles.

CONTENTS

Section		Page
	FOREWORD	ii
	ACKNOWLEDGMENTS	ii
	SUMMARY	iii
1	INTRODUCTION	1
2	RESULTS AND DISCUSSION	7
	2.1 Configuration and Performance Analysis	7
	2.2 AMOOS/AMRS Concepts and Applications	14
	2.3 Integrated Crew Module/AMOOS Analysis	18
	2.4 AMOOS/AMRS Flight Test Plan	22
	2.5 Simulation Techniques	23
3	CONCLUSIONS	25
4	RECOMMENDATIONS	27
	REFERENCES	31

Section 1
INTRODUCTION

In the AMOOS studies, the term aeromaneuvering is used to cover all uses of aerodynamic forces to assist in an orbit transfer maneuver. This would, then, include aeromaneuvering on the ascent as well as on the descent phases of the mission. So that work would not be duplicated, a literature survey was performed at the beginning of the first AMOOS contract (Ref. 1). As a result of this survey, aeromaneuvering orbit transfer was divided into three classes:

- Synergetic Plane Change Maneuvering (plane change using lift with propulsive forces used to compensate for the effects of drag)
- Aerobraking (use of drag forces only)
- Other Aeromaneuvering (use of drag and lift forces)

At that time, the literature was sufficiently extensive on the first and second classes to be able to identify the bounds of applicability and associated problem areas. A discussion of the first and second classes is given in Ref. 1. Since the above classes were so well covered in the literature, the Lockheed studies were confined to the third class and to the large deployable drag device such as the ballute.

The third class of maneuvers is that which uses both lift and drag forces to maneuver from the return transfer trajectory to the low earth orbit used for phasing with the Space Shuttle Orbiter. Excluded from the previous Lockheed studies (Ref. 1) were the reentry maneuvers of vehicles such as the Apollo command module and the Space Shuttle Orbiter because the aerodynamic forces were not used to transfer from one orbit to another but to land on the earth's surface. However, upon the advent of the Aeromaneuvering Recovery System (AMRS) maneuvers to a ground recovery are applicable and were considered in this study.

The basic concept that distinguishes the Lockheed AMOOS studies (Refs. 1 and 2) from previous orbit-to-orbit transfer studies is that the prime use of the lift force is for trajectory control. Other systems use the lift force to control the environment of the vehicle or to change an orbital parameter directly, e.g., the Shuttle Orbiter reentry or the synergetic plane change. On the other hand, the aerodynamic drag force is used primarily to change the orbital parameters in the AMOOS concept. Lift forces are used to ensure that the desired effects of drag are realized. That a small plane change can also be accomplished by AMOOS is an outcome more of the optimum means of modulating the vertical component of the lift force rather than a necessary use.

The AMRS can operate in the AMOOS mode to rendezvous with the Space Shuttle orbiter or maneuver to a recovery on the earth's surface. This latter mode will be referred to as the AMRS maneuver. This maneuver is similar to other recovery modes and, as such, lies between the Apollo and the Space Shuttle Orbiter for maneuverability.

The feasibility studies of earlier AMOOS contracts were directed toward establishing the sufficiency of the aerodynamic forces to effect the desired energy loss, trajectory control and plane change requirements. Based on the flight environment, including the ascent and descent in the Shuttle Orbiter's cargo bay, a vehicle was designed capable of performing a round-trip equatorial geosynchronous mission. Furthermore, this vehicle demonstrated a payload capability well in excess of any other vehicle capable of being transported in the Shuttle Orbiter's cargo bay.

In the above studies the navigation, guidance and control requirements for AMOOS were not analyzed. However, the static stability was considered, and only those configurations displaying such were considered for further study. Past studies (Ref. 3) of navigational accuracy and inspection of the specifications of current navigational hardware is sufficient to eliminate the navigation requirements from immediate study. For this reason, guidance

was considered the most important technology area and so was included in the current contract. Also included was an improved vehicle design and payloads analysis in order to determine the AMOOS capabilities more precisely. The outline of a model flight test program was also included in order to determine the flight test requirements for AMOOS and AMRS and what could be gained by such a program. Finally, AMRS was included for study in the contract to determine the requirements for an emergency vehicle using the AMOOS principles.

The previous configurations resulted from the emphasis of unmanned applications and integral vehicles. Under the current contract, manned applications were emphasized with a modular vehicle consisting of a propulsion module and manned and unmanned modules that could be used as required.

- Background

The first class of aeromaneuvering, as listed previously, is the synergetic plane change maneuver. The basic concept behind such a maneuver is that the lift vector can be used to produce a plane change. This plane change, if performed propulsively, can require a velocity increment larger than the velocity lost due to drag. In such a maneuver the vehicle starts from low earth orbit, slows propulsively to enter the atmosphere, changes orbital inclination using lift and then acquires its mission altitude propulsively. The literature (reviewed in Ref. 1) shows that the region of application is restricted to plane changes of 30 deg or more, to vehicles with moderate to high lift-to-drag ratio, about 1 or greater, and to mission altitudes below 1000 n.mi. With such restrictions, it has no practical application to AMOOS or AMRS in the ascent phase of a mission and so was not studied.

Dropping synergetic plane change from the studies left only the applications of aeromaneuvering on the return transfer phase of a mission. Such applications are considered in the second and third classes listed previously.

The Lockheed aeromaneuvering studies are characterized by lift. This is diagrammed in Fig. 1. The optimum use of this lift vector is for

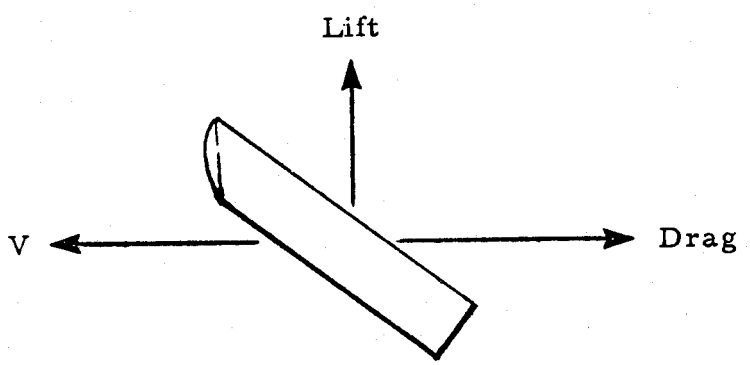

Fig. 1 - AMOOS

trajectory control during atmospheric flight. This use allows the one-pass maneuver from transfer orbit to Shuttle Orbiter phasing orbit. This appears the only practical means of performing the above maneuver in one pass since other methods of trajectory control during atmospheric flight, such as thrusting or drag modulation, are expensive in propellant or requires an impractical range of modulation, respectively.

The baseline kit concept that is the major consideration of Ref. 3 is shown in Fig. 2.

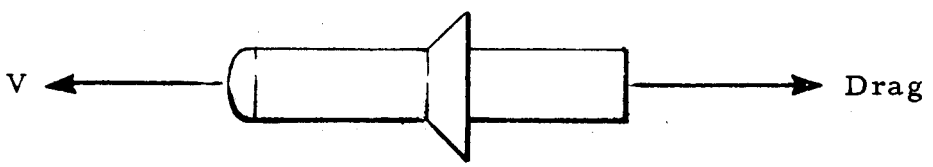

Fig. 2 - Aerobraked Tug

The flared skirt between the propulsion module and the payload is stowable and can be retracted to fit flush with the vehicle for transportation. The atmospheric flight is purely ballistic and trajectory control is exoatmospheric consisting of small burns at apogee to raise or lower the perigee to provide the correct aerobraking. This method results in many passes through the atmosphere to complete the orbital change maneuver. The time required can be from two to ten days or even longer.

The large deployable device of which an example is given in Fig. 3 would use drag modulation for trajectory control. Not only does the device of Fig. 3

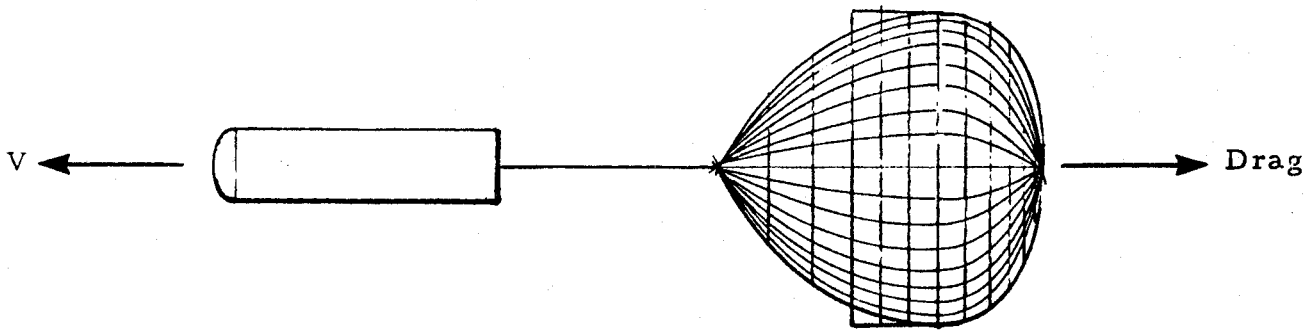

Fig. 3 - High Drag Device (Deployable Ballute)

use up all the payload capability but also requires a drag modulation range of about 4 or 5:1, which is somewhat impractical.

In Fig. 4, the payload performance capabilities of AMOOS, the aerobraked tug and the Baseline Tug are compared. As can be seen, all aspects of the AMOOS single stage payloads to equatorial geosynchronous orbit are well in excess of the other alternatives. As stated previously the ballute has negligible payload.

The potential for relatively high payload capability, combined with a recoverable vehicle, makes AMOOS highly attractive for further study. It is with this idea in mind that the applications study proceeded.

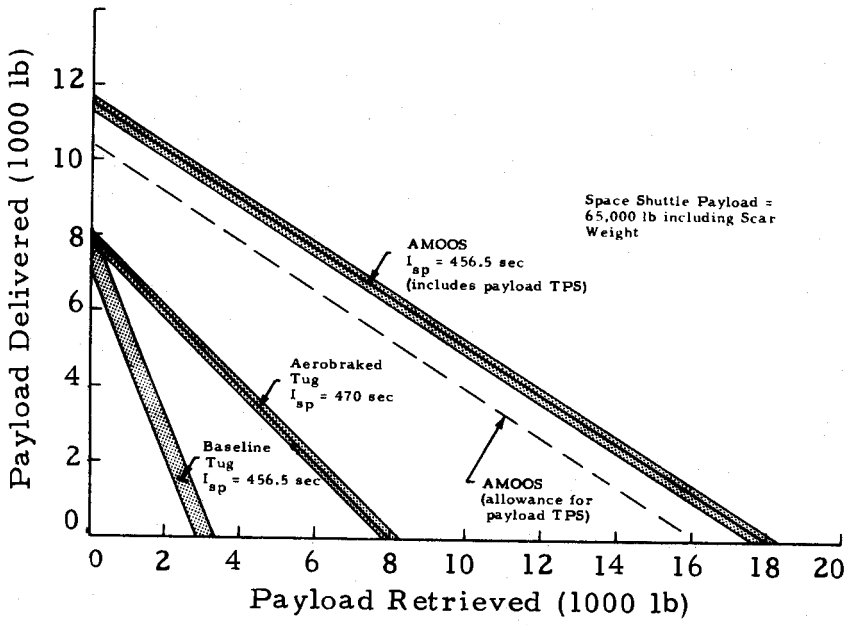

Fig. 4 - Comparison of Payload Capabilities for Several Recoverable Upper Stage Alternatives (Equatorial Geosynchronous Round Trip Mission)

The above performance capabilities assume that sufficient propellant can be carried to perform all of the above missions for the same vehicle dry weight and all up weight. Such a vehicle is generally referred to as a "rubberized" vehicle.

Section 2
RESULTS AND DISCUSSION

2.1 CONFIGURATION AND PERFORMANCE ANALYSIS

2.1.1 Consumables Analysis

A consumables analysis was performed for the cases shown in Fig. 5.

AMOOS Vehicle Stages	Space Shuttle		AMOOS MISSION				
			Equatorial Circular Altitude (n.mi.)				Lunar Orbit
	Launches	Payload (lb)	5000	10,000	15,000	19,323*	
1			x	x	x	x	x
$1\frac{1}{2}$	1	65,000	x	x	x	x	x
2			x	x	x	x	x
1							
$1\frac{1}{2}$	2	65,000	x	x	x	x	x
2			x	x	x	x	x
1							
$1\frac{1}{2}$	3	65,000	x	x	x	x	x
2			x	x	x	x	x
1	1	80,000				x	
2						x	
1	2	80,000					
2						x	
1	1	100,000				x	
2						x	
1	2	100,000					
2						x	
AMRS	1	65,000				x	x

*Geosynchronous altitude.

Fig. 5 - Performance Analysis

The results of this analysis for equatorial geosynchronous round trip mission are summarized in Fig. 6.

Payload Per Shuttle Launch (lb)	No. of Shuttle Launches	1 Stage		2 Stage	
		AMOOS (lb)	TUG (lb)	AMOOS (lb)	TUG (lb)
65,000	1	7,100	2,400	—	—
	2	—	—	18,000	8,000
80,000 lb	1	9,700	4,900*	—	—
	2	—	—	24,000	11,500*
100,000 lb	1	14,200	7,600*	—	—
	2	—	—	33,000	17,000*

*Approximate

Fig. 6 - Equatorial Geosynchronous Round Trip Payloads Summary and Comparison

The baseline cryogenic tug payloads have been estimated for comparison. The remaining payloads and the consumables analysis are reported in Appendix A of the final report (Ref. 4). As can be seen from Fig. 6, the payloads for AMOOS are considerably better than for the tug. In all cases both AMOOS and the tug are recoverable.

In the case of the AMRS analysis, the all up weight was determined as a function of recovered weight and I_{sp}. A practical design point appears to be an all up weight of 12,000 lb (11,250 lb excluding crew of four), a recovered weight of 6,000 lb and an I_{sp} of 320 sec.

The consumables analysis included due allowance for all consumables usage including APS and inerts, a 2% flight performance reserve, unusable main engine propellants, venting, boil-off and start, stop and gravity losses. Such losses and usage, other than main engine and APS usage, were estimated from those for the Baseline Space Tug (Ref. 5). A tare weight of 1,900 lb is also allowed on the Space Shuttle Orbiter and is reflected in the performance figures of Fig. 6.

2.1.2 AMOOS Performance Spectrum

The analysis of Section 2.1.1 was used to determine the AMOOS performance spectrum for earth orbital missions. An AMOOS dry weight of 6,700 lb, as determined in Section 2.2.1, and main engine propellant tank capacity of 48,500 lb was used to obtain the performance given in Fig. 7.

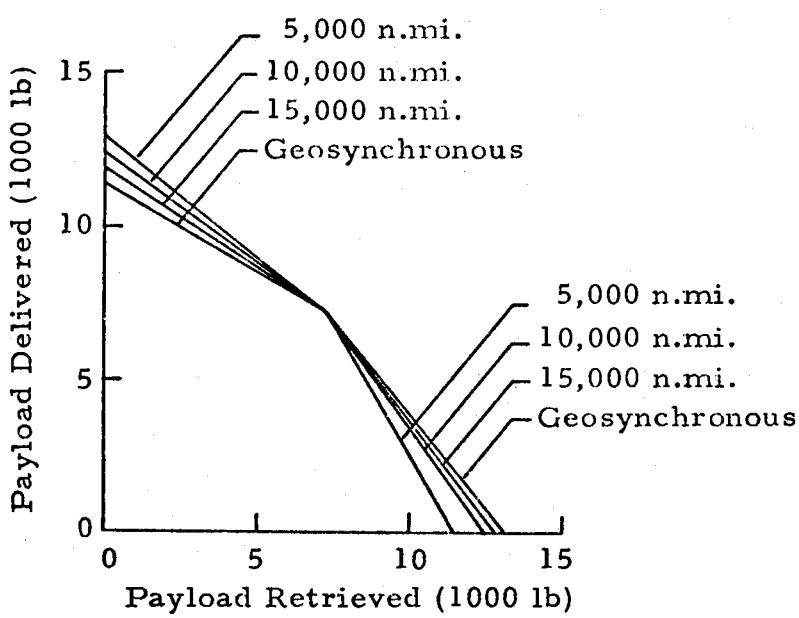

Fig. 7 - AMOOS Payload Capabilities for 6700 lb Dry Weight and 48,500 lb Propellant Capacity to Equatorial Orbits

The break point in the curves at the round-trip payload point is because this point is the design case for the LOX and LH_2 tank sizing. If the payload delivered is reduced below 7,100 lb, the round-trip payload, then the all up weight of AMOOS is reduced by the same amount since the tanks are already full. Hence the retrieved payload is reduced below that expected from the performance analysis (e.g., Fig. 4). The round-trip performance is apparently independent of mission altitude because the propulsive velocity increment, Δv, is the same for these altitudes when a 28.5 deg plane change is included to achieve the equatorial orbit. The spreading of the curves for other payload combinations is due to the particular combination of Δv values with vehicle weight at each of the major burns. The return Δv increases with decreasing mission altitude because of the increasing Δv requirement to perform the 28.5 deg plane change.

2.1.3 Vehicle Environment

The dynamic pressure and the aerodynamic heating rate to a 1 ft radius sphere are used herein to portray the configuration independent environment along an AMOOS or AMRS trajectory. The dynamic pressure and heating rate along the AMOOS and AMRS design skip trajectory are given in Fig. 8.

The dynamic pressure curve was obtained from trajectory simulation. The nominal peak value is 75 lb/ft^2. The heating rates were obtained using the method of Ref. 6. Since these are heating rates to a 1 ft radius sphere, the actual heating rates on the AMOOS or AMRS vehicle as designed are considerably lower. The peak rate on the AMOOS vehicle is 60 Btu/ft^2-sec.

The AMRS vehicle can also be flown on a ground recovery trajectory. The heating rates and dynamic pressure are given in Fig. 9 for such a mission.

The maximum dynamic pressure and peak heating rate on this trajectory are higher than on the skip trajectory. Therefore, the most severe aerodynamic environment for the AMRS vehicle is experienced in a ground recovery maneuver. The peak heating rate on the vehicle as configured is 90 Btu/ft^2-sec. The maximum dynamic pressure is 100 lb/ft^2 (the design value is 140 lb/ft^2).

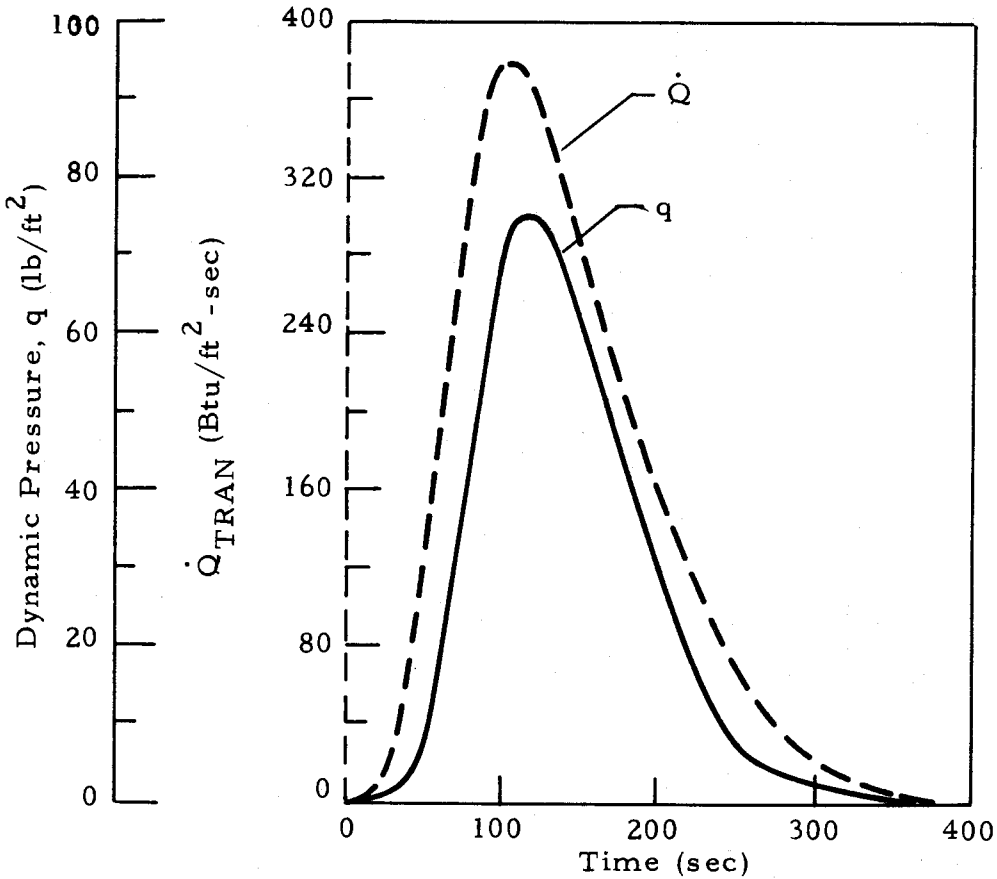

Fig. 8 - Dynamic Pressure and Stagnation Point Heating Rate to a 1 ft Radius Sphere along the AMOOS/AMRS Rendezvous Type Trajectory

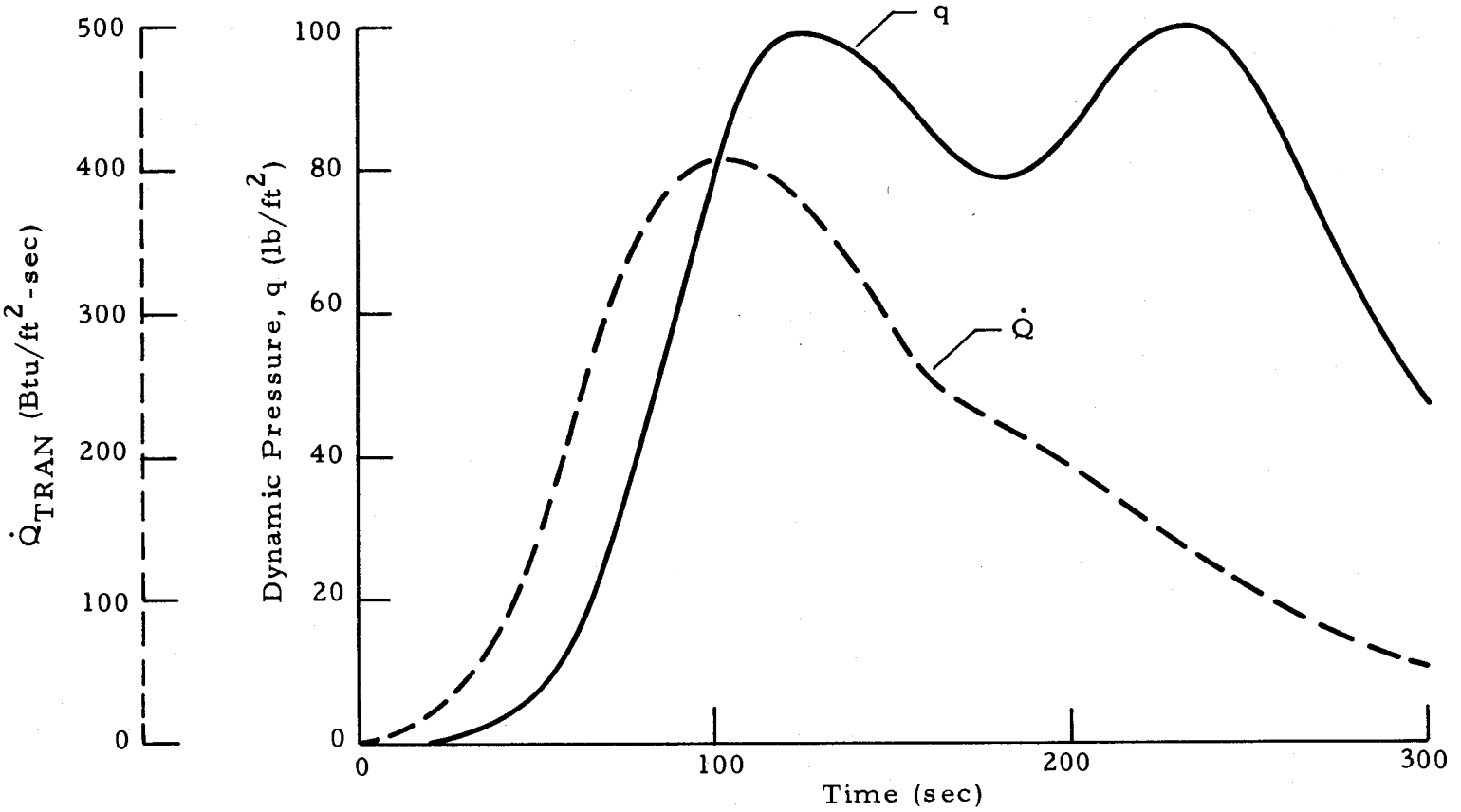

Fig. 9 - Dynamic Pressure and Stagnation Point Heating Rate to a 1 ft Radius Sphere Along an AMRS Ground Recovery Type Trajectory

2.1.4 Design Parameters

The design parameters chosen from the above payload capabilities, consumables analysis and environment reflect the current importance of the round-trip mission. The selected parameters are given in Table 1.

Table 1
SINGLE STAGE AMOOS DESIGN DATA

Total (all up) Weight: 63,100 lb (28,622 kg)
Payload: Up 7100 lb (3221 kg); Down 7100 lb (3221 kg)
Main Engine Consumables: 48,500 lb (22,000 kg)
Design Reentry Weight: 15,000 lb (6804 kg)
Bond Line Temperature: 600F (589K)
Design Dynamic Pressure: 100 lb/ft^2 (5000 N/m^2)

The design parameters for AMRS were chosen so that a four-man crew could be transported from equatorial geosynchronous orbit to either a low earth orbit or to the earth's surface. The design parameters are given in Table 2.

Table 2
AMRS DESIGN DATA

Total (all up) Weight: 12,500 lb (5670 kg)
Payload, Up Zero, Down: 748 lb (339 kg) (4 men)
Main Engine Consumables: 6,500 lb (2948 kg)
Design Reentry Weight: 7,000 lb (3175 kg)
Bond Line Temperature: 600F (589K)
Design Dynamic Pressure: 140 lb/ft^2 (7,000 N/m^2)

2.2 AMOOS/AMRS CONCEPTS AND APPLICATIONS

2.2.1 Design of the AMOOS Propulsion Module

The design parameters of Table 1 were used to design the primary structure of AMOOS. A ring-stringer stiffened skin type structure was chosen since skin thickness and local stiffness are important in supporting the TPS. The primary structure was optimized for ring and stringer spacings and thickness. A minimum skin thickness of 0.025 inch was specified. The primary structure weights are given in Table 3. These weights include nine rings. Each ring is 4 inches wide, 0.5 inch deep and the circumference of the vehicle. These rings are for attachment points, skin splice points, etc. Since the AMOOS propulsion module may enter the earth's atmosphere with or without a payload and must be transported in the Shuttle Orbiter's cargo bay, it was stressed for the cases given in Table 4. The weights of Table 3 reflect the most severe of these various requirements. The weights of the subsystems were obtained on comparing the AMOOS requirements to those of the Baseline Space Tug, etc., and making appropriate weight adjustments. The resulting AMOOS schematic is shown in Fig. 10. The four-man crew module designed in Section 2.3 is attached to the propulsion module to show an actual configuration.

The TPS weights for AMOOS were obtained from a design of an ablative TPS for the propulsion module. Also considered were the propulsion module with the manned module and a maximum length payload. The TPS was designed by first computing the heating rates experienced by AMOOS along its nominal trajectory. For most of its flight, including the peak rates, the AMOOS vehicle is in the transitional heating regime. The ablator thickness was then computed using the STAB II computer program developed by Johnson Space Center (Ref. 7). An ablative TPS was chosen because the temperatures computed were beyond the range of reradiative and insulative materials. The Martin Marietta SLA-561 ablator was chosen because it is a low density, flight rated material able to operate in the heating rate range experienced by AMOOS. The weights summary is given in Table 5.

Table 3

AMOOS PROPULSION MODULE PRIMARY STRUCTURE WEIGHTS AND TYPICAL STRUCTURE

Section	Station	Design Condition	Length (in.)	Weight (lb)
Nose	0-114	Orbiter	114	301
Fwd Body	114-240	Orbiter	126	321
Aft Body	240-408	Aero	168	391
10% Contingency				101
Total				1114

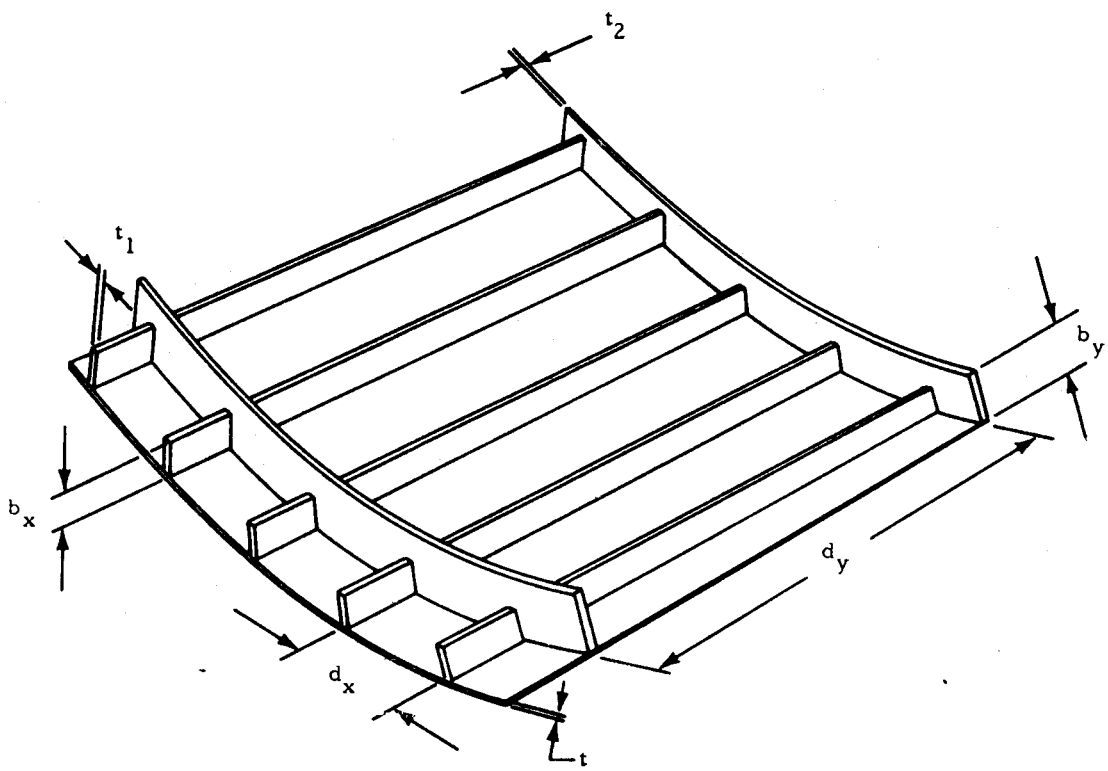

Table 4

DESIGN CASES CONSIDERED

Design Case	Propulsion Unit (8,000 lb)	Propulsion Plus Crew Capsule (15,000 lb)	Propulsion Plus Max. Length Payload (25,000 lb)	AMRS
Shuttle Cargo Bay	*	*	*	*
Aero				
$q = 100\ lb/ft^2$	*	*		
$q = 130\ lb/ft^2$			*	
$q = 140\ lb/ft^2$				*
$q = 150\ lb/ft^2$	*	*		

Table 5

AMOOS PROPULSION UNIT WEIGHT BREAKDOWN

	(lb)
Propulsion, APS, and Related Components	2,737
Avionics and Electrical	886
Primary and Related Structure	1,241
TPS	1,036
Contingency (includes 200 lb unassigned)	800
Total	6,700

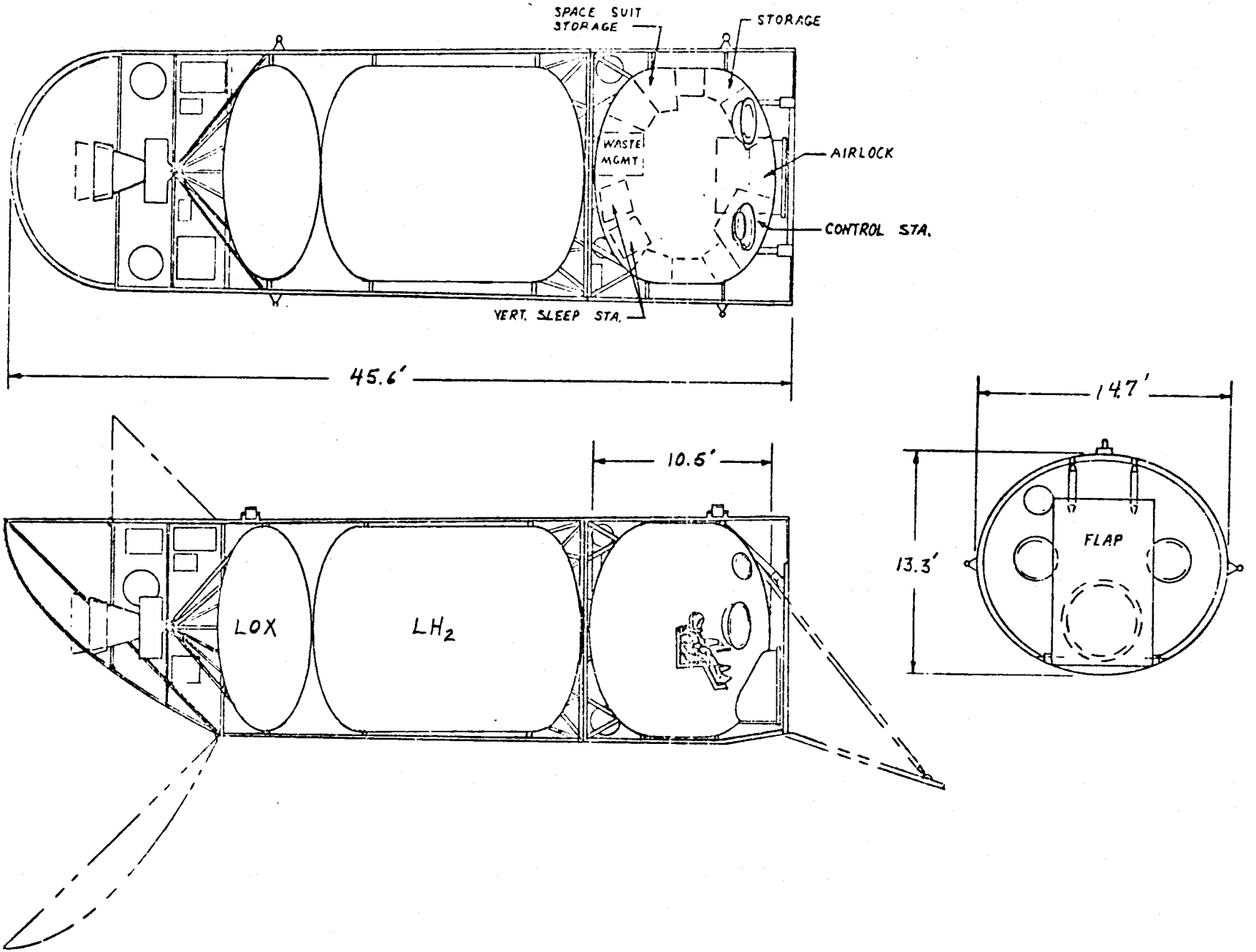

Fig. 10 - Manned AMOOS Concept

2.2.2 Design of AMRS

The design of the AMRS vehicle followed closely that of the AMOOS propulsion module. The primary structure was optimized following the same procedure. The cases considered are also given in Table 4. The subsystems weights were estimated from the consideration of those for the Baseline Tug and empirical formulas (Ref. 8). The life support system and related components were estimated using the components given in Ref. 9. The design of the TPS followed that for the AMOOS propulsion module. The resulting schematic for AMRS is given in Fig. 11. The AMRS TPS design followed that for AMOOS. The AMRS weight breakdown summary is given in Table 6.

Table 6
AMRS WEIGHT BREAKDOWN

	(lb)
Crew	748
LSS and Related Components	916
Propulsion and Related Components	1,192
Avionics, Electrical, Etc.	1,065
Structure	1,026
TPS	500
Contingency	473
Total	5,920

2.3 INTEGRATED CREW MODULE/AMOOS ANALYSIS

A manned module was designed for AMOOS. Its design followed that for AMOOS and the schematic is shown in Fig. 10 with the AMOOS propulsion module.

The manned module is a two-shell structure. The inner shell carries the pressurization loads and the local loads from the attachment of subsystems within the shell.

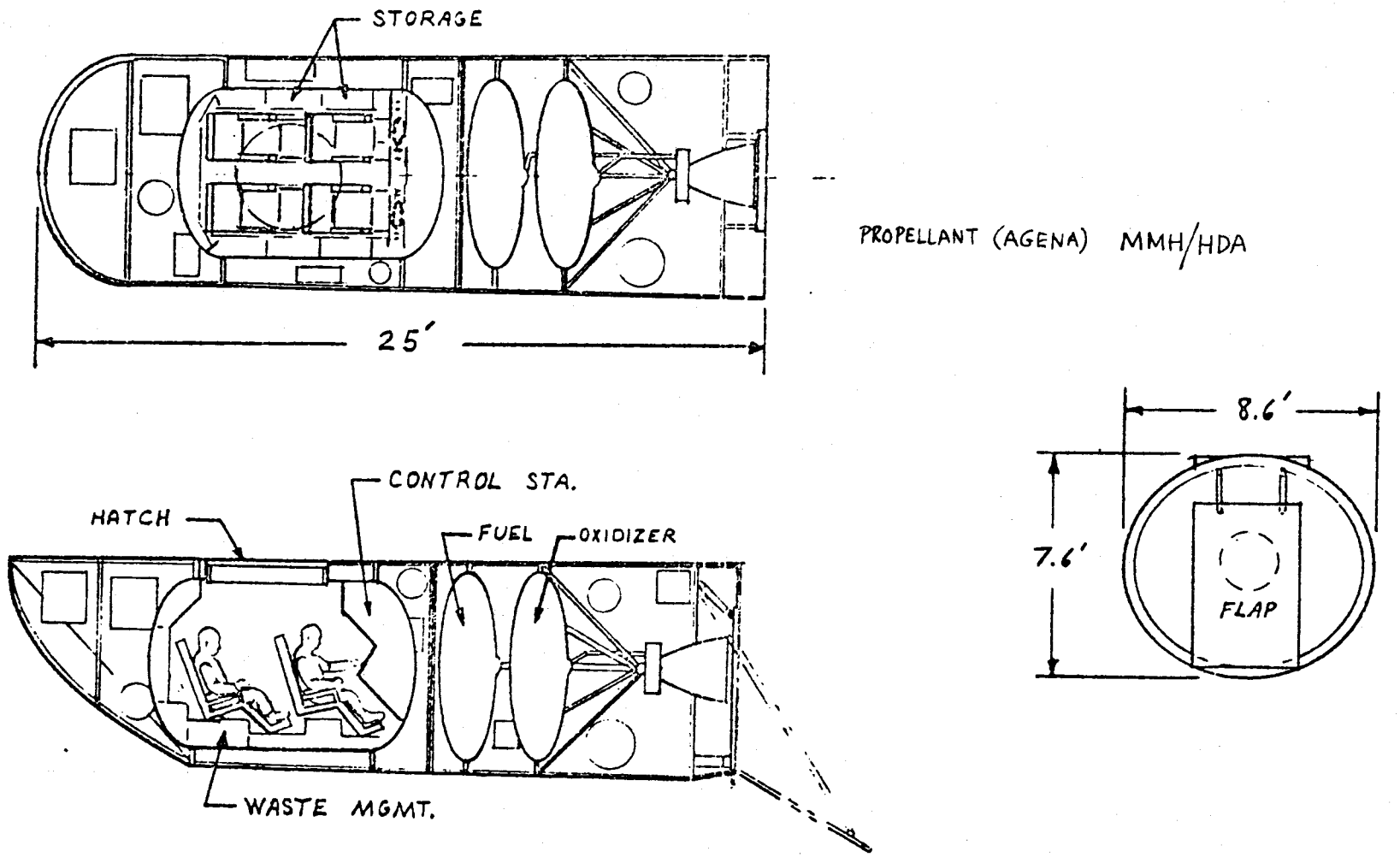

Fig. 11 - AMRS Concept

These latter loads and the weight of the inner shell itself are transferred to the outer shell which is the primary load bearing structure. This outer shell and its TPS was designed with the AMOOS propulsion module. The inner shell and the life support system were designed from Ref. 9.

The manned module provides living, but not working, quarters for four men for 30 days in space. Its weight (Table 7) allows it to be transported to and from equatorial geosynchronous orbit by AMOOS using a single Space Shuttle launch.

Table 7

AMOOS MANNED CAPSULE WEIGHT BREAKDOWN

	(lb)
Crew	748
LSS and Related Components	2,452
Avionics, Electrical, Etc.	725
Structure, Shell, Capsule, Etc.	1,936
TPS	335
Contingency	624
Total	6,820

The application of AMOOS to an equatorial sortie mission was also considered. This consisted of a two stage vehicle (Fig. 12) using two Shuttle launches. The manned modules consist of a crew quarters module and an orbital workshop. The crew quarters provide transportation and living space during the mission and, of course, is recovered. The workshop would be left on station for possible future use. The maximum weights of the modules are 14,000 lb recoverable plus 3,000 lb of consumables for the crew module and 17,000 lb for the workshop.

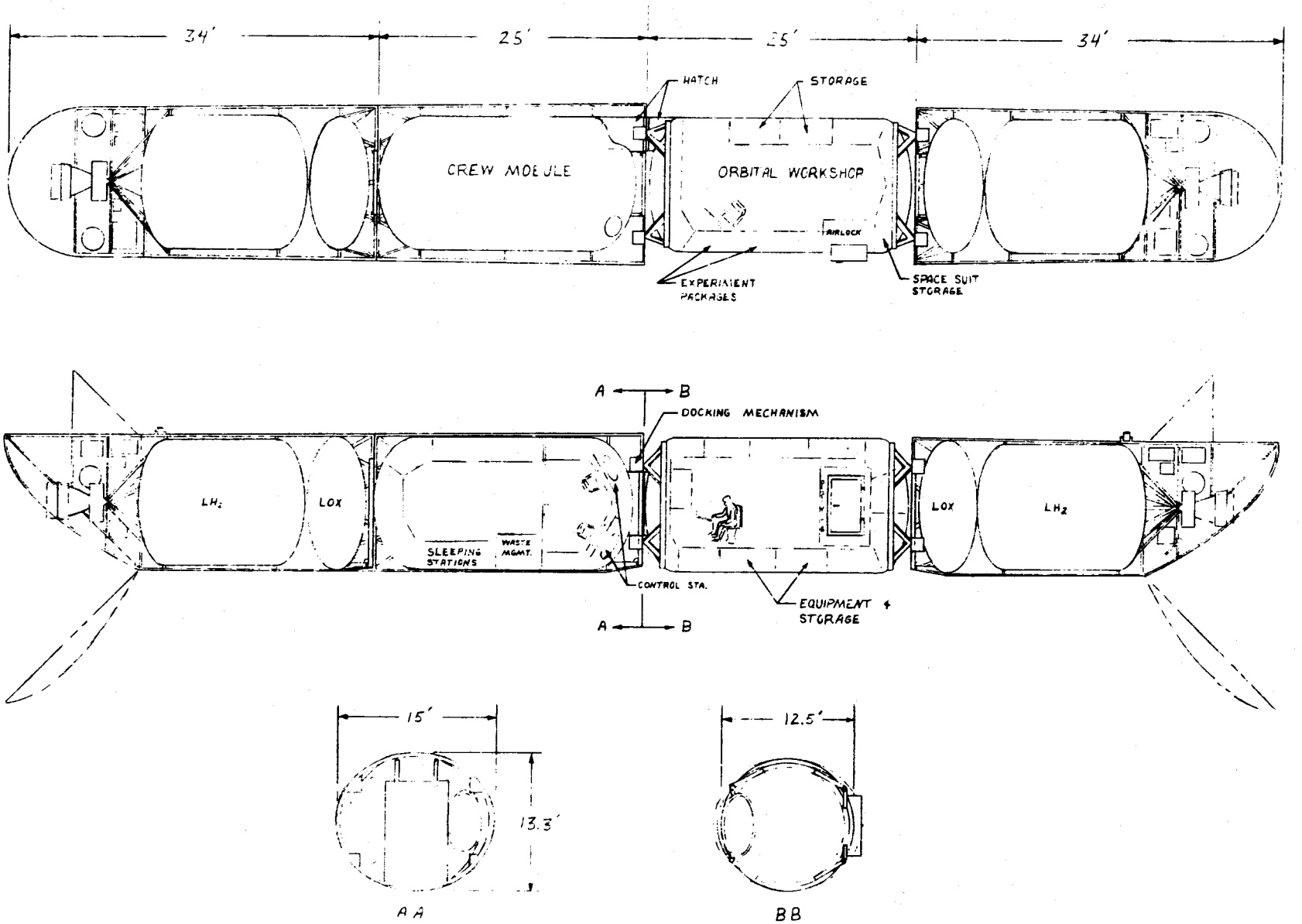

Fig. 12 - Example of Layout of a Two-Stage Modular AMOOS (two EOS launches)

2.4 AMOOS/AMRS FLIGHT TEST PLAN

Two flight test plans were developed. The first consists of four model flights. The second consists of two flights. The former gives a greater chance of success of the tests proving feasibility, providing design data and checking out systems and subsystems than the latter. The test programs are given in Table 8.

Table 8

FLIGHT TEST PLANS

RECOMMENDED FOUR-FLIGHT PLAN

Number of Shuttle Launches	Target Perigee	Orbit Energy	Test	1980	1981
S*	Low	Low	Vehicle Stability, TPS Ablative Rate and Ground Recovery Test	Δ	
S	Low	High	Vehicle Controllability, Heating Rate, Acceleration Test	Δ	
S	High	High	Vehicle Guidance, Heat Load and Phasing with Space Shuttle Test		Δ
S	Low	High	Simulated Manual Guidance and Backup Systems Test		Δ

ALTERNATE PLAN: MINIMAL MODEL FLIGHT TEST PLAN

Number of Shuttle Launches	Target Perigee	Orbit Energy	Test	1980	1981
S*	Low	Low	Vehicle Stability, TPS Ablative Rate and Ground Recovery Test	Δ	
S	Low	Low	Vehicle Controllability and Guidance Test		Δ

*S denotes a shared Space Shuttle flight.

2.5 SIMULATION TECHNIQUES

2.5.1 AMOOS/AMRS Conceptual Guidance Schemes

Two guidance schemes were developed for use with a three-degree-of-freedom simulation of AMOOS. The first of these schemes was based upon linear regulator theory and the second on the classical linear systems.

The linear regulator scheme is recommended for further development because it out performed the classical linear system approach in both accuracy and precision. A scheme for AMRS ground recovery guidance was developed from the linear regulator. This scheme is able to guide AMRS accurately through the peak heating rate and peak dynamic pressure areas.

The guidance objective for the AMOOS/AMRS rendezvous type guidance is shown diagramatically in Fig. 13. The requirement is to guide AMOOS so that it remains within the hatched area so that an acceptable phasing orbit is obtained. The precision of the linear regulator based scheme is compared with that of the classical linear systems in Fig. 14.

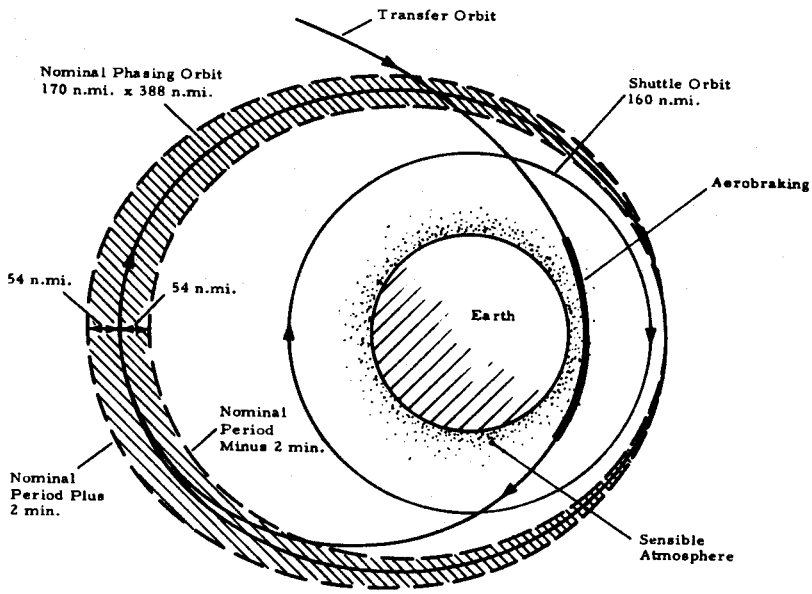

Fig. 13 - Guidance Objective

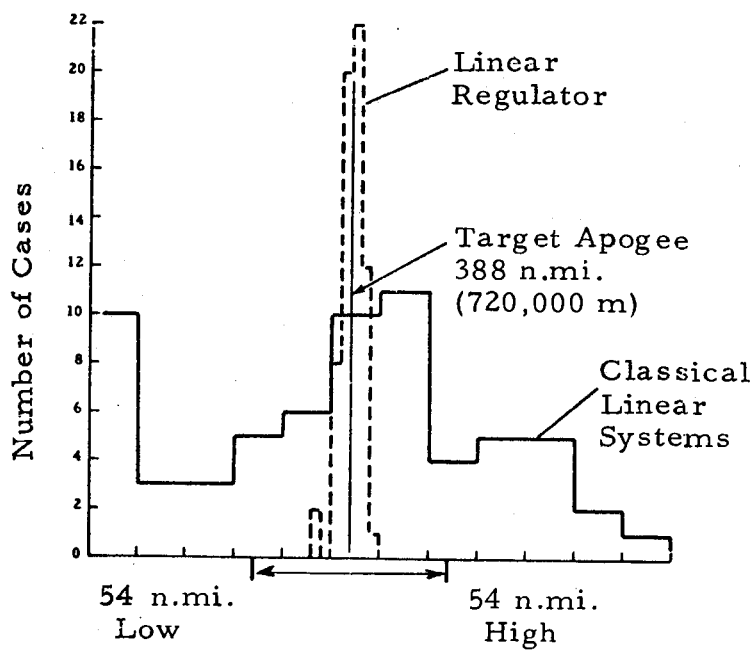

Fig. 14 - Guidance Results

Section 3
CONCLUSIONS

The more detailed analyses of AMOOS and AMRS have further established the feasibility of the one-pass, ablative TPS AMOOS concept, and, concurrently, established the feasibility of the comparable AMRS concept.

Specific conclusions from the multi-disciplined study of the AMOOS and AMRS configurations are:

- The modular AMOOS vehicle is practical and is within the state-of-the-art technology using magnesium (HM 21A-T8) or Beryllium-Aluminum (Be-38 Aℓ) material for the primary shell structure.
- Performance analysis has shown that AMOOS has payload capabilities to high energy orbits well in excess of the Baseline Space Tug.
- Weights analysis and a design study of the manned module shows that AMOOS can carry a four-man, 30-day module to geosynchronous orbit and return.
- The aerobraking concept is feasible for both AMRS and the modular AMOOS over a wide range of mission altitudes. These missions include lunar orbit as well as earth orbit up to geosynchronous.
- The Martin Marietta SLA 561 ablative material yielded a more practical TPS than other ablative, reradiative or insulative materials.
- The model flight test studies show that unmanned check out could be performed using four flights over approximately a two year period. These tests would be expected to eliminate four full scale flight tests. Each flight would share a Shuttle launch. Useful data could be obtained from a two-flight test.
- The linear regulator approach to atmospheric guidance proved superior to the classical linear systems approach. The velocity lost approach proved intractable to further development.
- Bank angle modulation proved to be an adequate means of lift vector modulation for trajectory control. Angle-of-attack modulation proved inadequate due to the low value of the lift curve slope in the desired angle-of-attack range.

- AMRS on-station weight is moderately sensitive to I_{sp} in the 260 to 350 sec range. Increasing the I_{sp} of space storable propellants to the 350 sec level or above will yield significant weight savings over the currently available 260 to 290 sec propellants.
- The aeromaneuvering plane change capability of the AMOOS configuration is little changed by the concurrent use of lift for trajectory control. For the AMRS-type aeromaneuver, the recovery point is little changed by the dual use of lift.
- The aeromaneuver appears to create no phasing problem with the Shuttle Orbiter with either the linear regulator or the classical linear systems.
- The linear regulator guidance reduces excursions of the dynamic pressure and heat loads to negligible amounts from the mean.

Section 4
RECOMMENDATIONS

The results of this study have shown that the current configuration can be expected to yield practical AMOOS and AMRS vehicles. There is no doubt that AMOOS and AMRS vehicles as studied herein could be developed into operational vehicles. However, these studies have identified further areas which require additional investigation to continue the advancement of AMOOS and AMRS as parts of a future orbital transport system.

All of the current technology studies with an application to the Baseline Space Tug have a corresponding application to AMOOS and possibly to AMRS. The recommendations herein are for studies applicable to a wide band of orbit-to-orbit vehicles, including AMOOS and AMRS.

- Navigational Accuracy Studies

The objectives of this task are:

a. Determine the effects of navigational accuracy on AMOOS/AMRS targeting and guidance. Both atmospheric and exoatmospheric navigation should be considered.

b. Determine the navigational accuracy required for AMOOS/AMRS to perform the atmospheric flight.

c. Determine the extent to which on-going SR&T studies for the Baseline Space Tug are applicable and define hardware development requirements for AMOOS/AMRS.

d. Determine the navigation accuracy required for AMOOS and AMRS as a function of entry corridor depth.

e. Evaluate existing hardware against requirements for various levels of autonomy.

f. Define required or desirable technology and compare to that required for the Baseline Space Tug.

g. Establish a practical set of navigational accuracies, entry corridor widths, navigation hardware and required or desirable technology.

- Guidance Development

  The objectives of this task are:

  a. Incorporate navigational knowledge at atmospheric entry into the guidance scheme.
  b. Modify the state model to incorporate variables resulting in the minimization of propellant and control usage.
  c. Incorporate the position and velocity at atmospheric exit in the performance index so that phase errors with the Space Shuttle orbiter are minimized.

- Manual Guidance Technique

  The objective of this task is:

  Provide a fail-safe mode for AMOOS and AMRS in case of a massive failure of guidance system hardware.

- Hybrid Engine Vehicle

  Objectives:

  a. Determine the performance characteristics of a hybrid engine vehicle for it to be competitive with the cryogenic vehicle on a manned geosynchronous mission.
  b. Determine the performance of specific, possible hybrid engine vehicles and staged vehicles and hence evaluate the capability of each to perform a manned geosynchronous mission.

- Load Bearing Tanks

  Objectives:

  a. Reduce or eliminate the primary structure.
  b. Determine the TPS required for such tanks.
  c. Establish weights trade between load and nonload bearing tanks.

- Increased Depth of Design Work of AMOOS and AMRS

  The objectives of this task are:

  a. Reduce structural weight by optimizing structure.
  b. Establish trades among candidate structures.
  c. Consider alternate vehicle geometry and perform the preliminary design and weights calculation for each alternate considered.
  d. Perform preliminary design of the hybrid engine vehicle.
  e. Determine the weights saving for AMOOS used as purely propulsive or expendable vehicle.

- Abort Analysis

  The objectives of this task are:

  a. Develop basic operations and performance requirements following a failure in AMOOS or AMRS after separating from the Space Shuttle.
  b. Demonstrate the basic advantages of an aeromaneuvering manned vehicle over a purely propulsive vehicle.

- Multiple Staged Vehicle Operation

  Objectives:

  a. Determine optimum stage configuration for particular missions.
  b. Establish a mission events and timeline for multiple staged vehicles.

- Flight Test Plan

  Objectives:

  a. Preliminary design of flight test model.
  b. Determination of trajectories to simulate the full-scale vehicle parameters during atmospheric flight.
  c. Determine method of stowing in Space Shuttle orbiter cargo bay and method of deployment.

- Alternate Configuration Performance

  Objectives:

  a. Determine the performance of high lift-drag ratio vehicles.
  b. Determine cross-range capability.
  c. Determine the increased performance of the uncoupled recovery system over the horizontal landing system.

- High Lift AMOOS

  Objectives:

  Determine the implications of using a heavy lift or growth Space Shuttle for the delivery of an aeromaneuvering vehicle.

- Space Station, Space Base, Lunar and Planetary

  Objectives:

  a. Determine the possible roles of AMOOS and AMRS in the more distant future of space flight.
  b. Determine vehicle changes and development that would enhance their capability to participate.

- Aerodynamic Heating and Tunnel Tests

  The objectives of this task are:

  a. Determine heating rates on the AMOOS configuration over the operational angle of attack range.
  b. Evaluate the predictive methods used to determine the aerodynamic heating.

REFERENCES

1. Andrews, C.D., "Feasibility and Tradeoff Study of an Aeromaneuvering Orbit-to-Orbit Shuttle (AMOOS)," LMSC-HREC TR D306600, Lockheed Missiles & Space Company, Huntsville, Ala., June 1973.
2. White, J., "Feasibility and Tradeoff Study of an Aeromaneuvering Orbit-to-Orbit Shuttle (AMOOS)," LMSC-HREC TR D390272, Lockheed Missiles & Space Company, Huntsville, Ala., August 1974.
3. Corso, C. J., and C. L. Eyer, "Space Tug Aerobraking Study," D5-17142, The Boeing Company, Huntsville, Ala., 12 April 1972.
4. White, J.,"Applications Study of AMOOS and AMRS — Final Report," LMSC-HREC TR D496644, Lockheed Missiles & Space Company, Huntsville, Ala., January 1976.
5. "Baseline Space Tug, System Requirements and Guidelines," MSFC 68-M00039-1, 15 July 1974.
6. Engel, C.D., "Aeroheating Correlations for Non-Continuum Hypersonic Flight," RTR-008-2, REMTECH, Inc., Huntsville, Ala., December 1972.
7. Curry, D.M., "An Analysis of a Charring Ablation Thermal Protection System," NASA TN D-3150, December 1965.
8. Corning, G., "Weight Prediction Method for the Space Tug," IDA Log No. HQ 74-16219, Institute for Defense Analyses, Arlington, Va., June 1974.
9. "Space Tug, Vol.I of II, Book 2 of 4, Final Report," The Boeing Company, NASA CR-103004, February 1971.