General Disclaimer

One or more of the Following Statements may affect this Document

- This document has been reproduced from the best copy furnished by the organizational source. It is being released in the interest of making available as much information as possible.

- This document may contain data, which exceeds the sheet parameters. It was furnished in this condition by the organizational source and is the best copy available.

- This document may contain tone-on-tone or color graphs, charts and/or pictures, which have been reproduced in black and white.

- This document is paginated as submitted by the original source.

- Portions of this document are not fully legible due to the historical nature of some of the material. However, it is the best reproduction available from the original submission.

Produced by the NASA Center for Aerospace Information (CASI)

NASA TECHNICAL MEMORANDUM

NASA TM X-64993

(NASA-TM-X-64993) SPACE SHUTTLE LIFT-OFF DYNAMIC MODEL (NASA) 39 p HC $4.00 CSCL 22B

N76-20191

Unclas

G3/18 20716

SPACE SHUTTLE LIFT-OFF DYNAMIC MODEL

By D. Christian
Systems Dynamics Laboratory

March 1976

APR 1976
RECEIVED
NASA STI FACILITY
INPUT BRANCH

NASA

George C. Marshall Space Flight Center
Marshall Space Flight Center, Alabama

TECHNICAL REPORT STANDARD TITLE PAGE

1. REPORT NO.	2. GOVERNMENT ACCESSION NO.	3. RECIPIENT'S CATALOG NO.
NASA TM X-64993		

4. TITLE AND SUBTITLE	5. REPORT DATE
Space Shuttle Lift-Off Dynamic Model	March 1976
	6. PERFORMING ORGANIZATION CODE
7. AUTHOR(S) D. Christian	8. PERFORMING ORGANIZATION REPORT #
9. PERFORMING ORGANIZATION NAME AND ADDRESS	10. WORK UNIT NO.
George C. Marshall Space Flight Center Marshall Space Flight Center, Alabama 35812	11. CONTRACT OR GRANT NO.
	13. TYPE OF REPORT & PERIOD COVERED
12. SPONSORING AGENCY NAME AND ADDRESS	Technical Memorandum
National Aeronautics and Space Administration Washington, D.C. 20546	14. SPONSORING AGENCY CODE

15. SUPPLEMENTARY NOTES

Prepared by Systems Dynamics Laboratory, Science and Engineering.

16. ABSTRACT

Previously developed dynamic models for the calculation of lift-off dynamic response of the Space Shuttle vehicle can handle only response of the vehicle with eight holddown arms attached or with all holddown arms detached. The new model developed in the referenced report takes into account the transition period between holddown and lift-off by giving the model the ability to vary holddown point separation as a function of vehicle flexible body and rigid body motion.

This report documents a study made to verify the new model's capability to simulate vehicle response at lift-off. To do this, a finite element model of the skirt is made and coupled to the free-free modes of the vehicle and cantilevered modes calculated and compared with the previously developed model. Results indicate that the new model will be able to predict accurate vehicle loads.

17. KEY WORDS	18. DISTRIBUTION STATEMENT
	Unclassified — Unlimited

19. SECURITY CLASSIF. (of this report)	20. SECURITY CLASSIF. (of this page)	21. NO. OF PAGES	22. PRICE
Unclassified	Unclassified	39	NTIS

MSFC - Form 3292 (Rev December 1972)

For sale by National Technical Information Service, Springfield, Virginia 22151

ACKNOWLEDGMENTS

The author is indebted to Dr. John Admire of NASA for his help in defining the original problem of study and Mary Godwin for her efficient typing of the manuscript.

TABLE OF CONTENTS

		Page
I.	BACKGROUND AND PURPOSE	1
II.	SOURCES OF MATERIAL AND THEORETICAL DATA	3
III.	THEORETICAL TREATMENT FOR PAD AND SKIRT STIFFNESS	3
IV.	THEORETICAL TREATMENT FOR COUPLING THE SKIRT AND THE SPACE VEHICLE	14
V.	COMPUTER WORK AND RESULTS	18
REFERENCES		33

LIST OF ILLUSTRATIONS

Figure	Title	Page
1.	Space Shuttle vehicle on the pad	2
2.	Space Shuttle dynamic analysis beam model diagram	4
3.	SRB skirt plate and beam model diagram	5
4.	Coordinate systems for skirt and skirt elements	7
5.	Number of free-free modes versus cantilever frequency	32

LIST OF TABLES

Table	Title	Page
1.	Influence Coefficient Matrix of Skirt	10
2.	Cantilevered Modal Frequencies for the Vehicle Before Lift-Off	20
3.	Free-Free Modal Frequencies for the Vehicle at Lift-Off	21
4.	Cantilevered Modal Frequencies for the Vehicle Using Free-Free Modes	22
5.	First Mode for the Shuttle Model for Before Lift-Off	24
6.	Seventh Mode for the Shuttle Model for Lift-Off	28

TECHNICAL MEMORANDUM X-64993

SPACE SHUTTLE LIFT-OFF DYNAMIC MODEL

I. BACKGROUND AND PURPOSE

The purpose of this report is to verify the on-pad structural dynamic model to be used for analyzing the lift-off response of the Space Shuttle vehicle. The Space Shuttle vehicle during the lift-off process changes from cantilever to free-free conditions. This transition does not occur instantaneously but in steps as the vehicle lifts off. The vehicle is equipped with eight holddown blocks for support. As lift-off occurs, the number of holddown blocks in contact with the vehicle can vary from eight to zero. The number of blocks in contact at the base of the vehicle will vary depending on the trajectory and vibration history of the structure.

A schematic of the vehicle sitting on the pad in its vertical position is shown in Figure 1. There are four support points at the base of each of the Solid Rocket Boosters (SRB), which are the cantilevered points for the vehicle. Because the vehicle is flexible and deflected at lift-off, the vehicle structure will have varying holddown boundary conditions as it lifts off. For lift-off dynamic analysis, a dynamic model of the vehicle involving modal synthesis will be used. The method involves calculation of the vehicle structural vibration free-free bending modes and coupling these modes to the launch pad through the SRB skirts. This analysis will necessarily be three dimensional because of the complexity of the vehicle. The process of using free-free modes and tying these to the pad via a skirt stiffness matrix will allow for the minimum number of modal analysis cases to be made. This limits the number of boundary conditions to free-free and eight point cantilevered.

The study in this report is a step toward the verification of this dynamic analysis model. In this report the cantilevered bending mode frequency of the model supported at the base with two beams simulating the skirts will be compared with the modal frequencies of a case using free-free modes and a finite element plate and beam skirt model at the base. However, the primary check required will be to determine the number of free-free modes required to get accurate cantilevered modes. This will improve the accuracy on future response computer runs and also make the analysis more efficient.

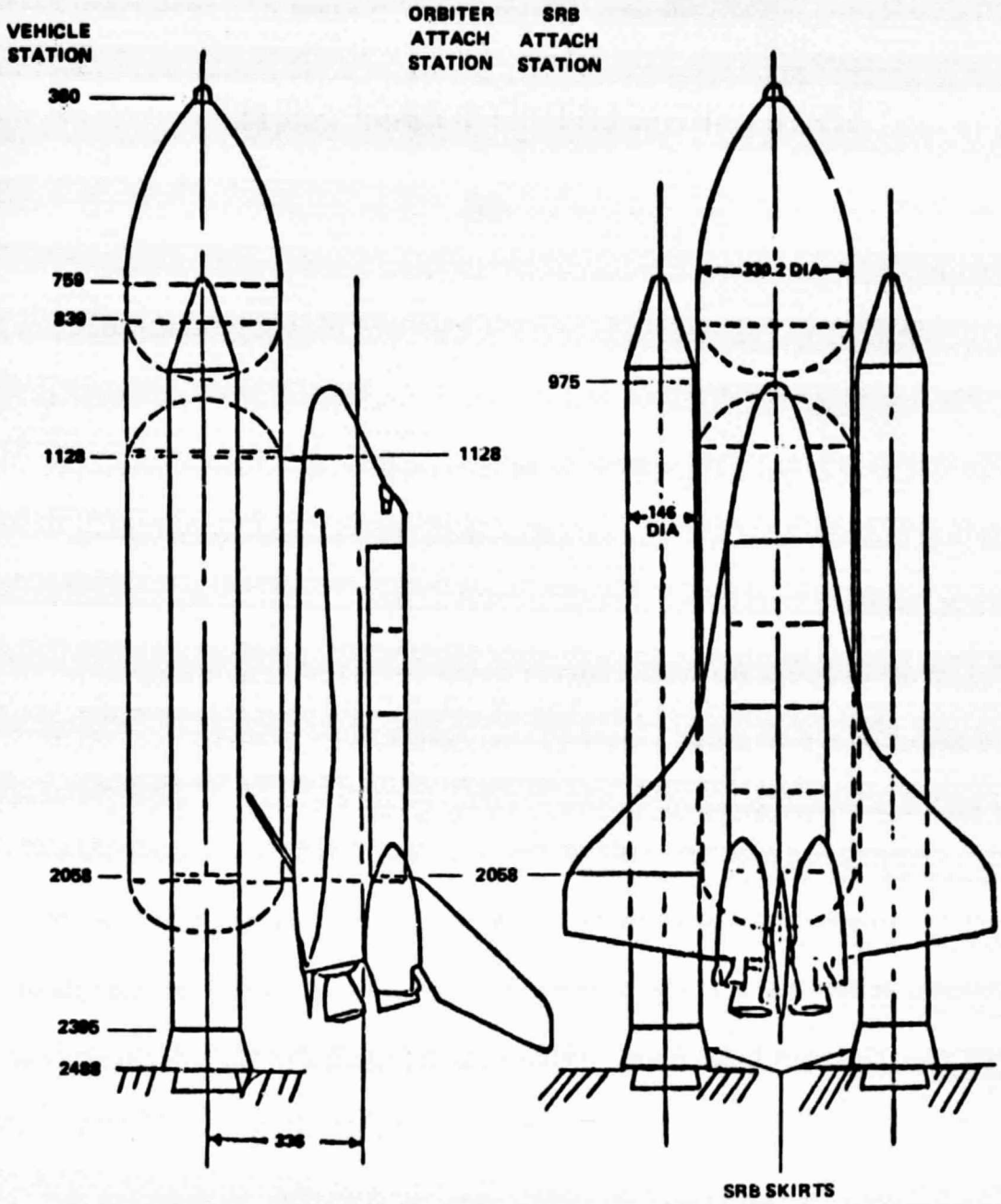

Figure 1. Space Shuttle vehicle on the pad.

II. SOURCES OF MATERIAL AND THEORETICAL DATA

The analysis of the vehicle involves the coupling of the vehicle free-free modes with the thrust pad, SRB skirt, and then to the ground. Then these free-free modes, when coupled to the ground, are run for new eigenvalues and compared with the regular cantilevered modes of the vehicle. Several sets of data are required to perform this study. This includes three dimensional free-free modes with vehicle full of propellant, three dimensional cantilevered modal data of the vehicle on the pad, three dimensional SRB skirt stiffness matrices for the left and right sides of the vehicle, and a set of equations for coupling the skirt and the free-free modes together.

The free-free and beam model skirt cantilevered modes of the vehicle were obtained from the same finite element beam models using different boundary conditions. These models were run as 1320 degree-of-freedom models using mostly beam stiffness elements. Hydroelastic effects were accounted for through the use of potential functions assuming symmetrical tanks for the LOX and fuel. These LOX and fuel tank analyses were made using the Boeing Company hydroelastic program published in Reference 1. The computer program produces an effective hydroelastic stiffness matrix for a propellant tank which accounts for the local breathing or radial motion in the Shuttle external tanks. These stiffness and mass matrices are coupled with the vehicle in the process of obtaining the entire vehicle mass and stiffness matrix on the computer. The free-free and cantilevered modes of the vehicle are first calculated for the model shown in Figure 2. These data are stored on computer magnetic tape together with the mass and stiffness matrices of the entire vehicle. The vehicle skirt stiffness was built as a three dimensional finite element model composed of plates and beam elements. A diagram of the skirt together with the numbering of the node points on the model is shown in Figure 3. Many of the equations used in this study are derived from Reference 2. However, additional work was required to couple the skirt finite element stiffness model to the Shuttle vehicle and compare these with the original cantilevered modes of the vehicle.

III. THEORETICAL TREATMENT FOR PAD AND SKIRT STIFFNESS

The vehicle SRB skirt physical characteristics were obtained from drawings and divided up into beam elements and plate elements between the node points shown by Figure 3. These elements were coupled together through the use of finite element techniques as presented in Reference 3. The coordinate

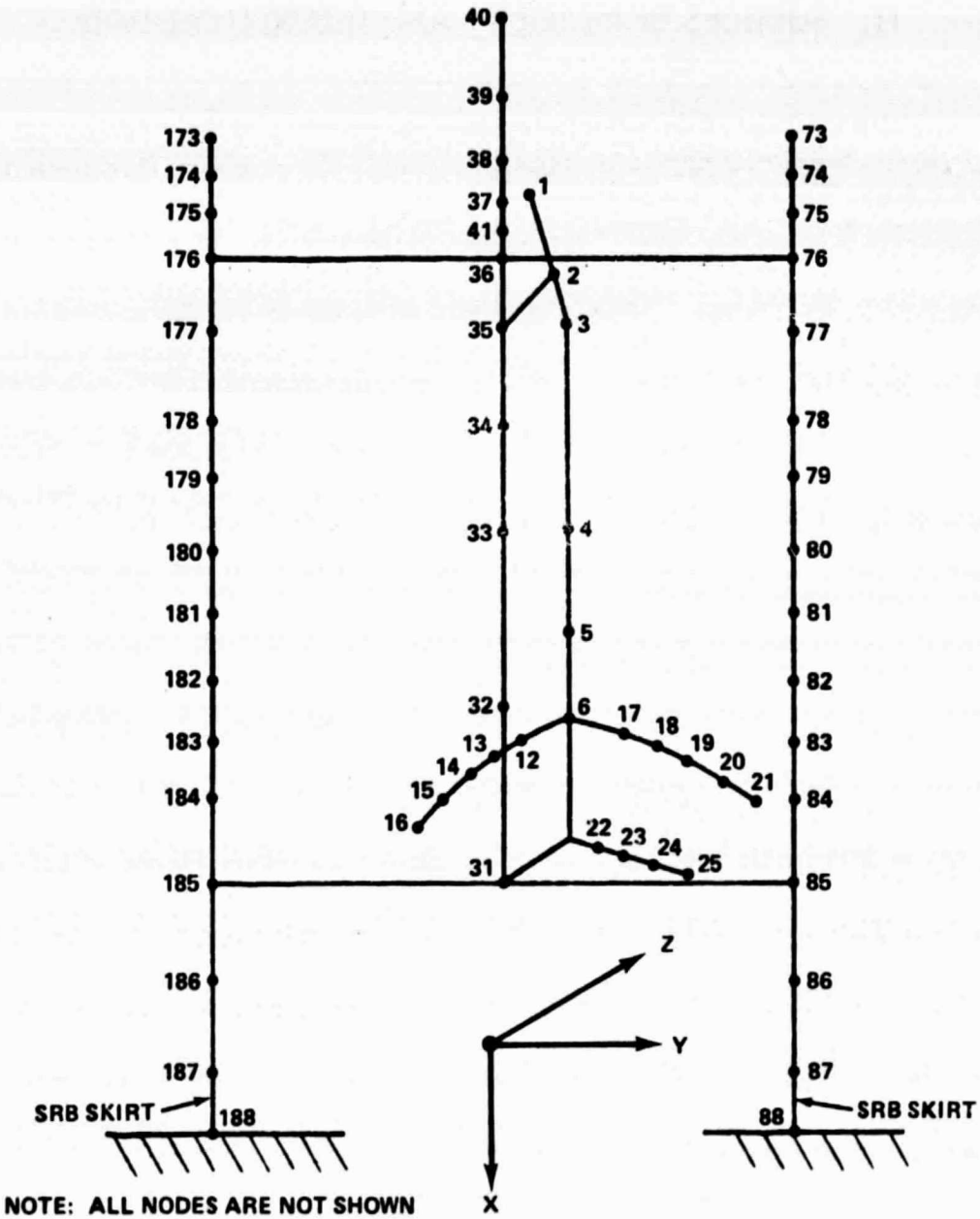

Figure 2. Space Shuttle dynamic analysis beam model diagram.

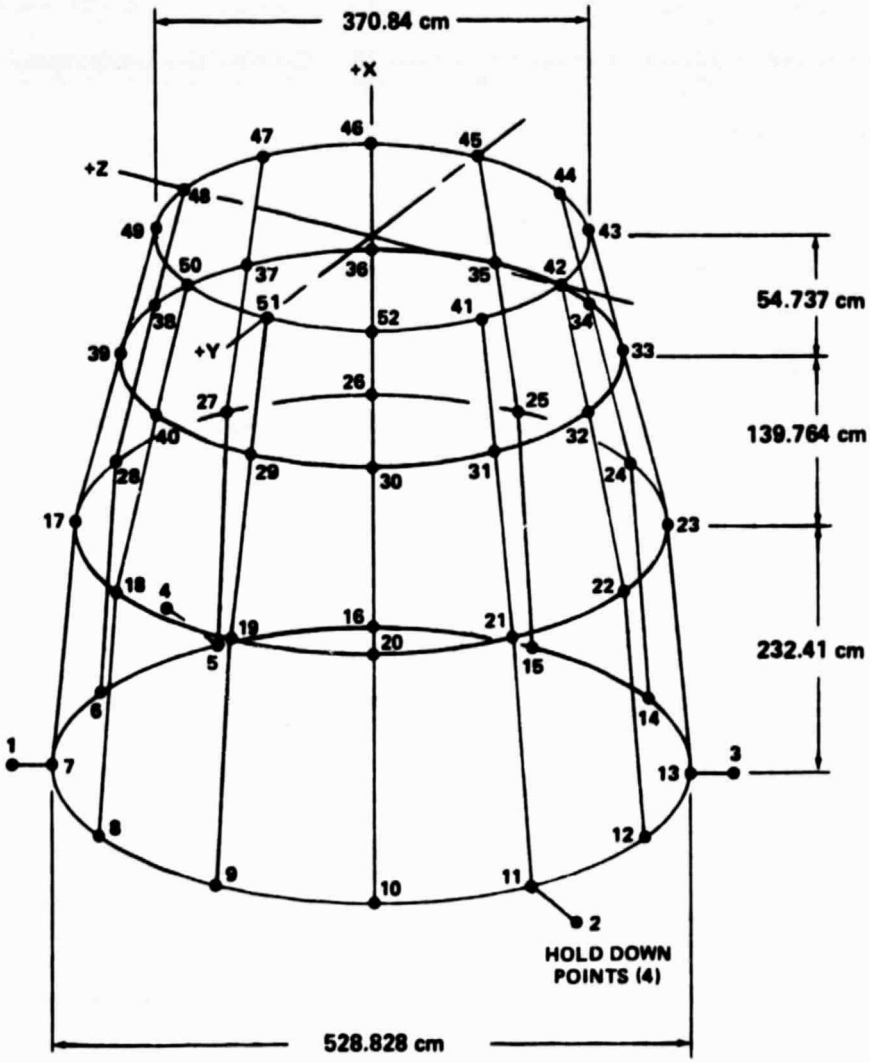

NOTE: NOT TO SCALE

Figure 3. SRB skirt plate and beam model diagram.

system used for the skirt is shown in Figure 4 for the overall skirt and for the local beam elements. The coordinates were used for listing and compiling the data for the stiffness matrix. However, the final resulting model was presented as an influence coefficient matrix in cartesian coordinates for coupling the skirt to the overall vehicle. A sample calculation showing the techniques used in obtaining finite element member properties is shown as follows for a sample skirt cross section.

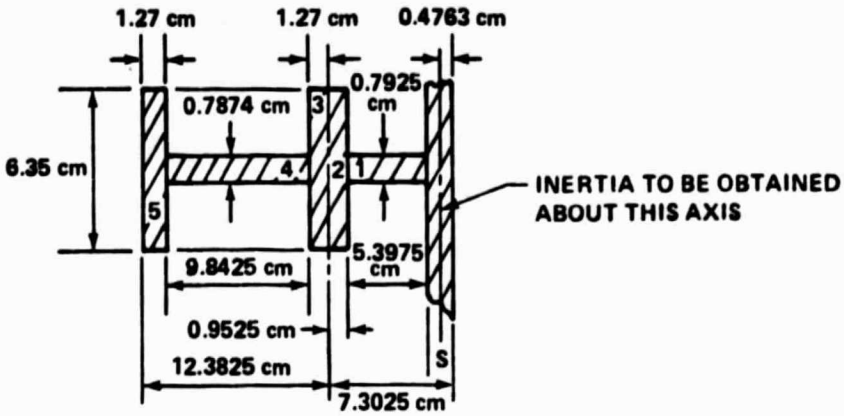

$A_1 = (0.7925)(5.3975) = 4.2774$ $\qquad$ $= 3.175$

$A_2 = (6.35)(0.9525) = 6.0484$ $\qquad$ $d_2 = 6.35$

$A_3 = (6.35)(1.27) = 8.0645$ $\qquad$ $d_3 = 7.4625$

$A_4 = (0.7874)(9.8425) = 7.7$ $\qquad$ $d_4 = 13.02$

$A_5 = (6.35)(1.27) = 8.0645$ $\qquad$ $d_5 = 18.5738$

$$I_i = \frac{bh^3}{12}$$

$$I_1 = \frac{(0.7925)(5.3975)^3}{12} = 10.3945$$

$$I_2 = \frac{(6.35)(0.9525)^3}{12} = 0.4573$$

$$I_3 = \frac{(6.35)(1.27)^3}{12} = 1.0839$$

$$I_4 = \frac{(0.7874)(9.8425)^3}{12} = 62.5649$$

$$I_5 = \frac{(6.35)(1.27)^3}{12} = 1.0839$$

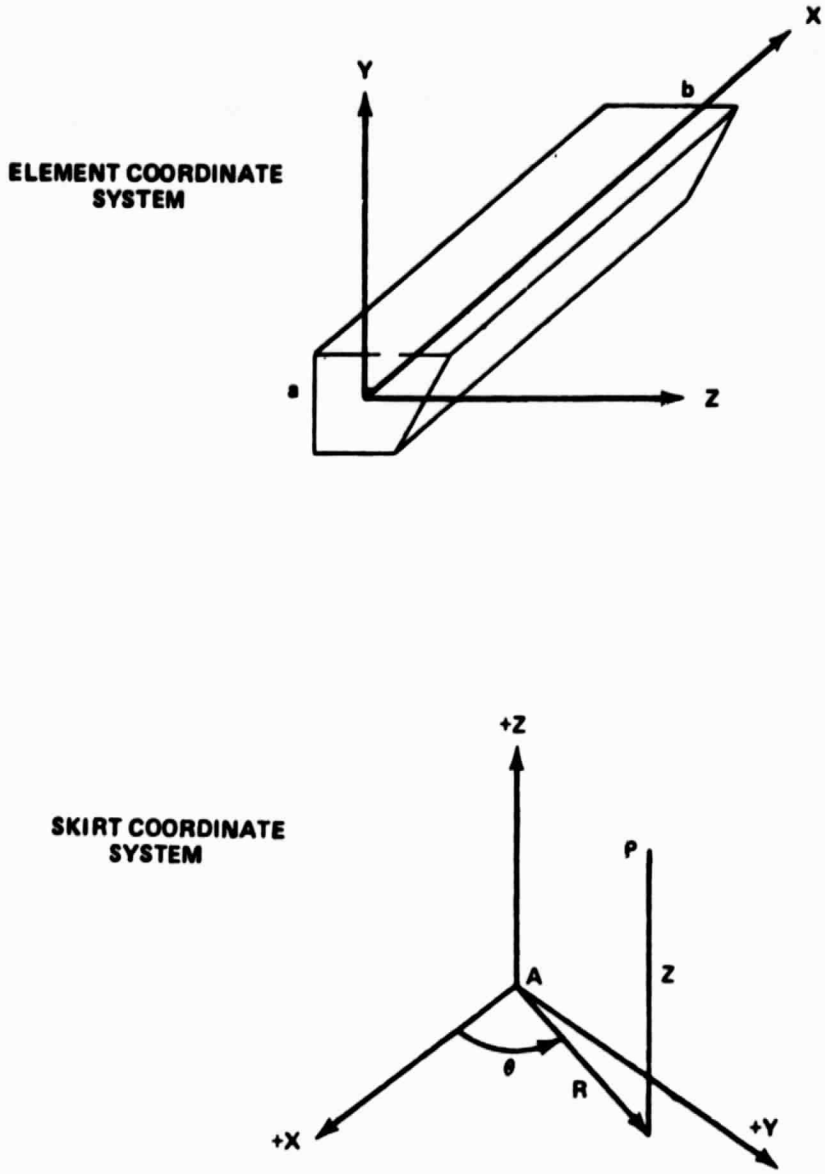

Figure 4. Coordinate systems for skirt and skirt elements.

$$I_{is} = I_i + A_i d_i^2$$

$$I_{1s} = 10.3945 + (4.2774)(3.175)^2 = 53.5035$$

$$I_{2s} = 0.4573 + (6.0484)(6.35)^2 = 244.3429$$

$$I_{3s} = 1.0839 + (8.0645)(7.4625)^2 = 450.1895$$

$$I_{4s} = 1.0839 + (8.0645)(18.5738)^2 = 2783.2089$$

$$I_s = 4907.5982 \text{ cm}^4$$

A_i = Area

d_i = distance to center of A_i.

i = Area number in figure.

I_i = Inertia of Areas 1 through 5.

I_s = Total Inertia about s axis.

The vehicle was modeled as a series of beam elements; therefore, provision had to be made for the finite element model of the skirt to couple with the model of the vehicle. This was done by fixing the skirt at its attach points to the vehicle and calculating the influence coefficient at the four launch pad holddown points for each SRB. The influence matrix at the four holddown points of each SRB was put into a 12 × 12 influence matrix in the following form:

$$\begin{Bmatrix} X_1 \\ Y_1 \\ Z_1 \\ X_2 \\ Y_2 \\ Z_2 \\ X_3 \\ Y_3 \\ Z_3 \\ X_4 \\ Y_4 \\ Z_4 \end{Bmatrix} = \underset{(12 \times 12)}{[E]} \quad \{F\}$$

where

$$\begin{Bmatrix} X_1 \\ \vdots \\ Z_4 \end{Bmatrix} = \{X_{1234}\}$$ (Simplified notation for deflection vector at each of the holddown points).

$\{F\}$ = Forces in X, Y, and Z directions at each holddown point.

$[E]$ = Influence coefficient matrix at the four holddown points.

$[E]^{-1}$ = Inverse of $[E]$ matrix. Also called stiffness matrix of skirt.

The stiffness matrix E^{-1} is then freed, assuming one tie point at the top of the skirt allowing this point to be coupled to the vehicle. The matrix E is shown in Table 1. To free the stiffness matrix E^{-1}, the following procedure and equations were used.

a. A rigid body transformation is written relating the deflections at the SRB holddown points to the SRB skirt tie-in point (see sketch).

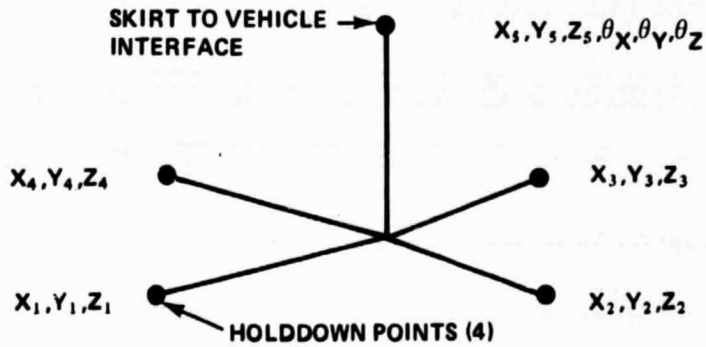

TABLE 1. INFLUENCE COEFFICIENT MATRIX OF SKIRT

Units = cm/N

	F_{X1}	F_{Y1}	F_{Z1}	F_{X2}	F_{Y2}	F_{Z2}	F_{X3}	F_{Y3}	F_{Z3}	F_{X4}	F_{Y4}	F_{Z4}
X_1	3.975-7	-3.315-7	-5.83-7	-1.691-8	3.086-8	-2.972-8	1.891-8	2.289-8	3.977-8	-8.748-8	-2.201-7	1.069-7
Y_1	-3.315-7	6.835-7	4.681-7	3.068-8	-3.485-8	6.647-8	2.289-8	-3.096-8	-4.641-8	2.202-7	4.815-7	-3.2-7
Z_1	-5.83-7	4.681-7	1.266-6	2.865-8	-6.635-8	4.255-8	3.977-8	-4.641-8	-8.457-8	1.076-7	3.209-7	-1.087-7
X_2	-1.691-8	3.068-8	2.865-8	3.963-7	-3.267-7	5.84-7	-8.748-8	-2.202-7	1.076-7	1.876-8	2.273-8	-3.955-8
Y_2	3.086-8	-3.485-8	-6.635-8	-3.267-7	6.784-7	-4.652-7	-2.201-7	4.815-7	3.209-7	-2.273-8	-3.094-8	4.632-8
Z_2	-2.971-8	6.647-8	4.255-8	5.84-7	-4.652-7	1.267-6	-1.069-7	-3.2-7	-1.087-7	3.955-8	4.632-8	-8.411-8
X_3	1.891-8	2.289-8	3.977-8	-8.748-8	-2.201-7	-1.069-7	3.975-7	3.316-7	5.83-7	-1.691-8	-3.086-8	2.972-8
Y_3	2.289-8	-3.096-8	-4.641-8	-2.202-7	4.815-7	-3.2-7	3.316-7	6.835-7	4.682-7	-3.068-8	-3.485-8	6.647-8
Z_3	3.977-8	-4.641-8	-8.457-8	1.076-7	3.209-7	-1.087-7	5.83-7	4.682-7	1.266-6	-2.865-8	-6.635-8	4.255-8
X_4	-8.748-8	2.202-7	1.076-7	1.877-8	-2.273-8	3.955-8	-1.691-8	-3.068-8	-2.865-8	3.963-7	3.267-7	-5.84-7
Y_4	-2.201-7	4.815-7	3.209-7	2.273-8	-3.094-8	4.632-8	-3.086-8	-3.485-8	-6.635-8	3.267-7	6.784-7	-4.652-7
Z_4	1.069-7	-3.2-7	-1.087-7	-3.955-8	4.632-8	-8.411-8	2.972-8	6.647-8	4.255-8	-5.84-7	-4.652-7	1.267-6

Note: F_X, F_Y, F_Z are the forces in the X, Y, Z directions respectively at the holddown points. X, Y, Z are the deflections at each of the holddown points.

ORIGINAL PAGE IS
OF POOR QUALITY

The transformation which relates the rigid deflection between the top and bottom of the skirt can be written in the following form:

$$\{X_{1234}\} = [T] \begin{Bmatrix} X_5 \\ Y_5 \\ Z_5 \\ \theta_{X5} \\ \theta_{Y5} \\ \theta_{Z5} \end{Bmatrix} = [T]\{X_5\}$$

where

$\begin{Bmatrix} X_5 \\ \vdots \\ \theta_{Z5} \end{Bmatrix} = \{X_5\}$ (Simplified notation for deflections at the top center of skirt).

$[T]$ = geometric transformation relating deflections at each end of SRB skirt.

Another form of this transformation is as follows:

$$\{F_5\} = -[T]^T \{F_{1234}\}$$

where

$[T]^T$ = Transposed of $[T]$

$\{F_5\}$ = Forces at top of SRB skirt in the X_5, Y_5, Z_5, θ_{X5}, θ_{Y5}, and θ_{Z5} directions.

$\{F_{1234}\}$ = Forces at the four holddown points in the X, Y, and Z directions.

This can be proven through the use of potential energy (PE) in the following steps:

$$(1) \quad PE = \frac{1}{2} \{X_{1234}^T\} [K] \{X_{1234}\}$$

where

$[K]$ = skirt stiffness matrix.

Put the $\{X_{1234}\}$ in different coordinate system:

$$(2) \quad PE = \frac{1}{2} \{X_5\} [T]^T [K] [T] \{X_5\}$$

Differentiate PE with respect to $\{X_5\}$:

$$(3) \left\{ \frac{\partial PE}{\partial X_5} \right\} = [T]^T [K] [T] \{X_5\} = \{F_5\} \quad .$$

Differentiate equation (1) with respect to $\{X_{1234}\}$:

$$(4) \left\{ \frac{\partial PE}{\partial X_{1234}} \right\} = [K] \{X_{1234}\} = \{F_{1234}\} \quad .$$

Put coordinate transformation in equation (4):

$$(5) \quad \{F_{1234}\} = [K] [T] \{X_5\} \quad .$$

Therefore by comparing equations (3) and (5), we have

$$(6) \quad \{F_5\} = [T]^T \{F_{1234}\} \quad .$$

b. Now the following deflection relations can be written

$$\{X_{1234}\} = \{X_{1234}\}_e + \{X_{1234}\}_r \quad , \tag{3-1}$$

where

$\{X_{1234}\}$ = Deflection of holddown points

$\{X_{1234}\}_e$ = Elastic deflection of holddown points with top of skirt fixed

$\{X_{1234}\}_r$ = Deflection of holddown points due to motion of top of skirt.

Therefore

$$\{X_{1234}\}_r = [T]\{X_5\} \quad , \tag{3-2}$$

where

$\{X_5\}$ = Motion node point representing top of skirt

$[T]$ = Geometric relation between top and bottom of skirt motion.

The influence matrix of the skirt can be used to relate the following terms:

$$\{X_{1234}\}_e = \{E\}\{F_{1234}\} \quad . \tag{3-3}$$

From equations (3-1) through (3-3),

$$\{X_{1234}\} = [E]\{F_{1234}\} + [T][X_5] \quad .$$

Solving this equation for F_{1234} gives

$$\{F_{1234}\} = [E]^{-1}\{X_{1234}\} - [E]^{-1}[T]\{X_5\} \quad .$$

Also the forces at X_5 are

$$\{F_5\} = -T^T\{F_{1234}\}$$

or

$$\{F_5\} = [-T^T][E]^{-1}\{X_{1234}\} - [-T^T][E]^{-1}\,T\{X_5\} \quad .$$

Placing these equations in matrix form gives the following stiffness matrix for the free-free skirt:

$$\begin{Bmatrix} F_{1234} \\ F_5 \end{Bmatrix} = \left[\begin{array}{c|c} [E]^{-1} & [E]^{-1}[T] \\ \hline [-T^T]\,E^{-1} & [T^T][E]^{-1}[T] \end{array}\right] \begin{Bmatrix} X_{1234} \\ X_5 \end{Bmatrix} \quad .$$

This equation now represents the free-free stiffness matrix of the skirt which can be attached at the vehicle/skirt interface by superimposing this matrix on the vehicle stiffness matrix. A derivation similar to this was performed in Chapter 4 of Reference 3.

IV. THEORETICAL TREATMENT FOR COUPLING THE SKIRT AND THE SPACE VEHICLE

The theory for coupling the vehicle and the skirt is explained in Reference 2. However, some additional points of emphasis will be covered in the following explanation.

The equations that are used for the system that has the skirt superimposed as a separate matrix are as follows:

$$\left[\begin{array}{c|c} M & 0 \\ \hline 0 & 0 \end{array}\right] \begin{Bmatrix} \ddot{h}_i \\ \ddot{S}_o \end{Bmatrix} + \left[\begin{array}{c|c} K_{11} & K_{12} \\ \hline K_{21} & K_{22} \end{array}\right] \begin{Bmatrix} h_i \\ \hline S_o \end{Bmatrix} = 0 \qquad (4\text{-}1)$$

where

h_i = deflections of the vehicle in discrete coordinates

S_o = deflections of the massless vehicle skirt at the holddown attach points.

$\left[\begin{array}{c|c} M & 0 \\ \hline 0 & 0 \end{array}\right]$ = mass matrix of vehicle

$\left[\begin{array}{c|c} K_{11} & K_{12} \\ \hline K_{21} & K_{22} \end{array}\right]$ = stiffness matrix of vehicle plus skirt.

This is the equation of motion of the flexible vehicle with the skirt assumed to be massless. K_{22} is partitioned in this equation to have a point in the model for attaching the launch pad holddown structure. Matrices K_{22}, K_{12}, K_{21}, and part of K_{11} are the local stiffness matrix of the skirt which was previously obtained.

The stiffness of the launch pad needs to be added to equation (4-1) which will be called K_s. The pad attaches to each vehicle holddown point and then to the ground. For this study the pad is assumed to be much stiffer than the vehicle and, therefore, a value of 10^8 was used for the pad stiffness. In future analysis this will allow the vehicle to be released in steps. Therefore, after matrix K_s is added equation (4-1) becomes

$$\left[\begin{array}{c|c} M & 0 \\ \hline 0 & 0 \end{array}\right] \begin{Bmatrix} \ddot{h}_i \\ \hline \ddot{S}_o \end{Bmatrix} + \left[\begin{array}{c|c} K_{11} & K_{12} \\ \hline K_{21} & K_{22} + K_s \end{array}\right] \begin{Bmatrix} h_i \\ \hline S_o \end{Bmatrix} = 0 \quad . \qquad (4\text{-}2)$$

By collapsing the massless point deflections, the skirt deflections are written as

$$\{S_o\} = -[K_{22} + K_s]^{-1} [K_{21}]\{h_i\} \quad . \tag{4-3}$$

Equation (4-2) reduces to the following equation after using equation (4-3):

$$[M]\{\ddot{h}_i\} + [K_{11} - K_{12} (K_{22} + K_s)^{-1} K_{21}] \{h_i\} = \{0\} \quad .$$

This equation can be separated into two parts, one part which presents the hold-down stiffness as a forcing function and the other part which presents the structure as a free-free system. This form becomes

$$[M]\{\ddot{h}_i\} + [K_{11} - K_{12} K_{22}^{-1} K_{21}]\{h_i\}$$

$$= [K_{12} (K_{22} + K_s)^{-1} K_{21} - K_{12} K_{22}^{-1} K_{21}]\{h_i\} \quad . \tag{4-4}$$

For the equation in this form the forcing function is dependent upon the vehicle deflections.

This equation can be transformed into modal coordinates using the vehicle free-free modes or eigenvectors calculated from the left side of equation (4-4). The mode shapes are used to relate the real coordinates and modal coordinates as follows [5]:

$$\{h_i\} = [\phi_{in}]\{q_n\} \quad ,$$

where

$[\phi_{in}]$ = Matrix of vehicle mode shapes

q_n = Deflections in modal coordinates

n = 1 to maximum number of mode shapes used.

Substituting this equation into equation (4-4),

$$[M][\phi_{in}]\{\ddot{q}_n\} + \left[K_{11} - K_{12} K_{22}^{-1} K_{21}\right][\phi_{in}]\{q_n\}$$
$$= \left[K_{12} (K_{22} + K_s)^{-1} K_{21} - K_{12} K_{22}^{-1} K_{21}\right][\phi_{in}]\{q_n\} \quad .$$

Now multiplying this equation through by $[\phi_{in}]^T$, we get

$$[\phi_{in}]^T [M][\phi_{in}]\{\ddot{q}_n\} + [\phi_{in}]^T \left[K_{11} - K_{12}\left[K_{22}^{-1}\right] K_{21}\right][\phi_{in}]\{q_n\}$$
$$= [\phi_{in}]^T \left[K_{12}(K_{22} + K_s)^{-1} K_{21} - K_{12} K_{22}^{-1} K_{21}\right][\phi_{in}]\{q_n\} \quad . \quad (4\text{-}5)$$

Thus equation (4-5) has each of its matrices transformed into modal coordinates, q_n. The following equations are true when modes are used which are normalized to a mass matrix of $[I]$:

$$[\phi_{in}]^T M[\phi_{in}] = [I]$$

$$[\phi_{in}]^T \left[K_{11} - K_{12} K_{22}^{-1} K_{21}\right][\phi_{in}] = \left[\omega_n^2\right] \quad ,$$

where

$\left[\omega_n^2\right]$ = Modal stiffness matrix

$[I]$ = Unit diagonal matrix.

Therefore, the final cantilevered equation needed for the study in this report is as follows:

$$\{\ddot{q}_n\} + \left[\omega_n^2\right]\{q_n\} + [\phi_{in}]^T \left\{K_{12}\left[K_{22}^{-1} - (K_s + K_{22})^{-1}\right] K_{21}\right\} \phi_{in} \{q_n\} = 0 \quad . \quad (4\text{-}6)$$

From equation (4-6) the stiffness matrix for this study becomes

$$\left[\omega_n^2\right] + [\phi_{in}]^T \left\{ K_{12} \left[K_{22}^{-1} - (K_s + K_{22})^{-1} \right] K_{21} \right\} [\phi_{in}] \quad ,$$

and the mass matrix becomes

$$[I] = \text{Unity matrix} \quad .$$

When the eigenvalues of equation (4-6) are found, these become the eigenvalues of the cantilevered model using the free-free modes. For equation (4-6) to yield accurate answers, enough eigenvectors have to be used. This is considered in the next section.

V. COMPUTER WORK AND RESULTS

The computer was used to perform all the modal analysis presented in this report. The frequencies are presented for the models in Tables 2, 3, and 4 for the cantilevered, free-free, and cantilevered using free-free modes case, respectively. The data presented in Tables 2 and 3 were obtained from Reference 4. The case called cantilevered using free-free modes (Table 4) was calculated from the equations in Section IV and should be compared with the regular cantilevered case of Table 2. The frequencies shown by Table 4 were calculated using 133 free-free modes. The first mode of this case is 0.3372 Hz for the beam cantilevered case of Table 2. One mode shape or eigenvector from the data of Reference 4 is shown in Tables 5 and 6. Only the frequencies of the cantilevered case using free-free modes were obtained for this study.

The purpose of this study was to determine the minimum number of modes required to give adequate results when running a response analysis using this model. This involves determining how many modes are needed to get an accurate cantilevered model using free-free modes. The results of this study are plotted in Figure 5. The dashed line shows the frequency of the first vehicle cantilever mode using the beam model. The solid line shows how the modes of this study approach the beam skirt model cantilevered modes as the number of free-free

modes used is increased. The first case plotted on the graph with six modes has only the rigid body translational modes of the vehicle. The results of this study show that 133 modes will get the cantilevered frequencies to stabilize to an adequate value.

The frequencies of the beam skirt model case are not necessarily required to check with the frequencies of the finite element skirt model case in an accurate manner. The finite element skirt model vehicle modes may be more accurate than the original modes. Future analysis will check other capabilities of this vehicle model to support vehicle lift-off response runs.

TABLE 2. CANTILEVERED MODAL FREQUENCIES FOR THE VEHICLE BEFORE LIFT-OFF

(Hertz)

1	3.249878-01
2	5.956157-01
3	1.718463+00
4	2.175227+00
5	2.438598+00
6	2.540976+00
7	2.796643+00
8	2.841367+00
9	3.550067+00
10	3.774598+00
11	3.898305+00
12	3.973684+00
13	4.487331+00
14	4.639952+00
15	4.957747+00
16	5.019869+00
17	5.094447+00
18	5.237568+00
19	5.273588+00
20	5.564382+00
21	5.568274+00
22	5.880078+00
23	5.921880+00
24	5.970356+00
25	6.171667+00
26	6.278513+00
27	6.414800+00
3	6.724295+00
29	7.244324+00
30	7.356226+00
31	7.413448+00
32	7.475123+00
33	7.479023+00
34	7.506658+00
35	7.506993+00
36	7.883658+00
37	7.906871+00
38	8.360751+00
39	8.645072+00
40	8.739157+00
41	9.170196+00
42	9.247315+00
43	9.715493+00
44	9.853336+00
45	9.975346+00
46	1.018604+01
47	1.036935+01
48	1.062011+01
49	1.067625+01
50	1.074963+01
51	1.101699+01
52	1.147945+01
53	1.203666+01
54	1.216425+01
55	1.253940+01
56	1.278344+01
57	1.329355+01
58	1.345482+01
59	1.350749+01
60	1.465350+01
61	1.504326+01
62	1.559725+01
63	1.572299+01
64	1.594594+01
65	1.677471+01
66	1.686471+01
67	1.689765+01
68	1.704662+01
69	1.728834+01
70	1.798055+01
71	1.829575+01
72	1.847752+01
73	1.896356+01
74	1.985329+01
75	2.046846+01
76	2.060136+01
77	2.124146+01
78	2.189057+01
79	2.268065+01
80	2.269746+01
81	2.297935+01
82	2.328406+01
83	2.368071+01
84	2.410820+01
85	2.442672+01
86	2.446160+01
87	2.498830+01
88	2.627076+01
89	2.650731+01
90	2.653644+01
91	2.691232+01
92	2.712507+01
93	2.761596+01
94	2.767149+01
95	2.783024+01
96	2.835000+01
97	2.835619+01
98	2.882649+01
99	2.947907+01
100	3.041479+01
101	3.043699+01
102	3.078848+01
103	3.110252+01
104	3.139740+01
105	3.146815+01
106	3.198085+01
107	3.294097+01
108	3.332028+01
109	3.382328+01
110	3.397979+01
111	3.448942+01
112	3.459678+01
113	3.471344+01
114	3.482574+01
115	3.516482+01
116	3.519793+01
117	3.548363+01
118	3.568842+01
119	3.591150+01
120	3.626775+01
121	3.680372+01
122	3.705726+01
123	3.795603+01
124	3.898934+01
125	3.962253+01
126	4.084467+01
127	4.216824+01

ORIGINAL PAGE IS
OF POOR QUALITY

TABLE 3. FREE-FREE MODAL FREQUENCIES FOR THE VEHICLE AT LIFT-OFF

(Hertz)

1	8.535184-03	46	8.687225+00	91	2.523282+01
2	3.630093-03	47	9.049305+00	92	2.567453+01
3	1.642321-03	48	9.235602+00	93	2.569236+01
4	7.891143-04	49	9.983022+00	94	2.712007+01
5	3.134428-03	50	1.013804+01	95	2.734474+01
6	6.135509-03	51	1.035685+01	96	2.755291+01
7	2.196647+00	52	1.039486+01	97	2.761081+01
8	2.386108+00	53	1.062220+01	98	2.804173+01
9	2.610530+00	54	1.099773+01	99	2.883780+01
10	2.737462+00	55	1.138209+01	100	2.949070+01
11	2.805582+00	56	1.143997+01	101	3.009793+01
12	2.971602+00	57	1.203353+01	102	3.067953+01
13	3.581480+00	58	1.216517+01	103	3.074037+01
14	3.750521+00	59	1.279441+01	104	3.104661+01
15	3.759380+00	60	1.296516+01	105	3.116297+01
16	3.854986+00	61	1.342054+01	106	3.137993+01
17	3.981075+00	62	1.379651+01	107	3.201988+01
18	4.466683+00	63	1.438291+01	108	3.210359+01
19	4.784617+00	64	1.469689+01	109	3.215015+01
20	4.965156+00	65	1.496980+01	110	3.220063+01
21	5.064592+00	66	1.562901+01	111	3.222650+01
22	5.126586+00	67	1.605236+01	112	3.262434+01
23	5.296836+00	68	1.644782+01	113	3.300073+01
24	5.337314+00	69	1.682332+01	114	3.337875+01
25	5.491104+00	70	1.711871+01	115	3.415348+01
26	5.533594+00	71	1.731401+01	116	3.445730+01
27	5.567259+00	72	1.737268+01	117	3.453798+01
28	5.838283+00	73	1.753007+01	118	3.465815+01
29	5.902399+00	74	1.766052+01	119	3.509602+01
30	5.977927+00	75	1.815007+01	120	3.521767+01
31	6.212504+00	76	1.815276+01	121	3.594749+01
32	[illegible]409797+00	77	1.849913+01	122	3.645448+01
33	[illegible]585773+00	78	1.913627+01	123	3.671977+01
34	6.684153+00	79	1.982609+01	124	3.704260+01
35	6.793367+00	80	2.003165+01	125	3.707852+01
36	7.262272+00	81	2.018836+01	126	3.749525+01
37	7.447322+00	82	2.052610+01	127	3.785440+01
38	7.475271+00	83	2.162795+01	128	3.795227+01
39	7.487949+00	84	2.189036+01	129	3.824869+01
40	7.504022+00	85	2.257281+01	130	3.837454+01
41	7.680908+00	86	2.268457+01	131	3.845851+01
42	7.886992+00	87	2.324930+01	132	4.080582+01
43	7.901693+00	88	2.402166+01	133	4.199954+01
44	8.324074+00	89	2.421648+01		
45	8.426491+00	90	2.501769+01		

ORIGINAL PAGE IS
OF POOR QUALITY

TABLE 4. CANTILEVERED MODAL FREQUENCIES FOR THE VEHICLE USING FREE-FREE MODES

(Hertz)

1	0.3372	31	7.4144	61	14.8202
2	0.5601	32	7.4727	62	15.052
3	1.8203	33	7.4754	63	15.6535
4	2.2699	34	7.5057	64	15.879
5	2.4732	35	7.5059	65	16.5329
6	2.4785	36	7.8626	66	16.6810
7	2.7647	37	7.8871	67	16.7954
8	2.8457	38	8.2647	68	16.905
9	3.4962	39	8.6569	69	17.2563
10	3.8453	40	8.7376	70	17.7753
11	3.8853	41	9.2276	71	18.1346
12	3.9738	42	9.3236	72	18.2996
13	4.4906	43	9.77206	73	18.5186
14	4.6543	44	9.7959	74	19.3705
15	4.959	45	9.9997	75	19.9559
16	5.0210	46	10.1836	76	19.9795
17	5.1161	47	10.3717	77	20.5173
18	5.2552	48	10.6163	78	21.1034
19	5.2884	49	10.6325	79	21.6220
20	5.5693	50	10.9468	80	21.9022
21	5.5734	51	11.0595	81	22.6920
22	5.9236	52	11.4819	82	23.0050
23	5.9514	53	12.0443	83	23.2227
24	6.0043	54	12.1677	84	23.7757
25	6.2124	55	12.2853	85	24.0683
26	6.2945	56	12.8814	86	24.2603
27	6.4170	57	13.2081	87	24.5078
28	6.7251	58	13.3918	88	26.0616
29	7.0860	59	13.5653	89	26.1525
30	7.3564	60	14.6611	90	26.2913

TABLE 4. (Concluded)

91	26.5093	121	36.8185
92	26.5985	122	37.0150
93	27.1337	123	37.9158
94	27.2186	124	38.7869
95	27.6213	125	38.8345
96	27.6832	126	39.4725
97	27.9684	127	39.8006
98	28.0996	128	39.9529
99	29.3391	129	40.0872
100	30.1818	130	40.8972
101	30.4394	131	42.5832
102	30.8000	132	44.7157
103	31.1129	133	44.9845
104	31.4102		
105	31.4703		
106	31.9929		
107	32.9383		
108	33.312		
109	33.659		
110	33.7741		
111	33.8273		
112	33.8887		
113	34.2623		
114	34.5332		
115	34.5919		
116	34.9659		
117	35.1110		
118	35.2022		
119	35.5916		
120	36.0714		

ORIGINAL PAGE IS
OF POOR QUALITY

TABLE 5. FIRST MODE FOR THE SHUTTLE MODEL FOR BEFORE LIFT-OFF

Eigenvalue = 4.16536

NODE POINT		X	Y	Z	θ_X	θ_Y	θ_Z
1	G	-2.687861-03	3.862811-08	-1.165963-02	-8.272382-10	-9.613261-06	-4.608101-10
2	G	-2.980682-03	-2.537507-07	-1.027377-02	-8.272329-10	-9.597120-06	-4.608352-10
3	G	-3.343908-03	-4.058252-08	-8.557958-03	-8.672177-10	-9.651646-06	-4.396064-10
4	G	-3.320834-03	-1.699058-07	-5.981916-03	-1.036670-09	-9.783078-06	-2.933934-10
5	G	-3.301353-03	-2.216612-07	-3.846252-03	-1.154885-09	-9.909761-06	-1.129878-10
6	G	-3.287809-03	-2.283339-07	-2.373295-03	-1.234938-09	-9.993898-06	4.877218-11
7	G	-3.280110-03	-2.236122-07	-1.541876-03	-1.256683-09	-1.001713-05	1.171565-10
8	G	-3.276912-03	-2.200647-07	-1.210254-03	-1.260348-09	-1.003660-05	1.678260-10
9	G	-2.519971-03	-3.612641-07	1.770754-04	-1.452354-09	-1.010112-05	-1.319350-08
10	G	-3.527273-03	-5.467350-07	4.089963-04	-8.406104-09	-1.007423-05	-8.122441-09
11	G	-3.527745-03	-3.493323-07	4.096209-04	-5.707067-09	-1.010492-05	1.480030-09
12	G	-2.189565-03	-3.631354-07	-2.373425-03	-1.238271-09	-9.993899-06	5.543329-11
13	G	-2.256154-03	-3.244389-07	-2.373980-03	-9.537776-09	-9.992891-06	2.129911-10
14	G	-2.289465-03	-2.651263-07	-1.898799-03	-1.576493-08	-9.989291-06	6.471669-10
15	G	-2.322798-03	-1.661753-07	-1.424248-03	-2.096768-08	-9.986293-06	1.020807-09
16	G	-2.356146-03	-3.888774-08	-9.502253-04	-2.366863-08	-9.984737-06	1.219850-09
17	G	-2.189575-03	-3.649472-07	-2.373167-03	-1.231607-09	-9.993899-06	4.211048-11
18	G	-2.256134-03	-3.871833-07	-2.373491-03	7.063402-09	-9.992881-06	-1.154125-10
19	G	-2.289438-03	-4.335942-07	-1.898106-03	1.328632-08	-9.989294-06	-5.493535-10
20	G	-2.322763-03	-5.196159-07	-1.423351-03	1.848455-08	-9.986299-06	-9.227414-10
21	G	-2.356102-03	-6.339515-07	-9.491233-04	2.118266-08	-9.984744-06	-1.121626-09
22	G	-4.460932-03	-6.360653-08	-5.271419-04	-1.256683-09	-1.001714-05	1.171566-10
23	G	-5.326420-03	5.341996-08	1.936670-04	-1.258094-09	-1.003157-05	1.183335-10
24	G	-6.195551-03	1.711299-07	9.174978-04	-1.264929-09	-1.009131-05	1.240286-10
25	G	-7.066697-03	2.893463-07	1.648242-03	-1.265290-09	-1.009412-05	1.243315-10
26	G	-3.267298-03	-1.972938-07	2.383187-04	-1.260352-09	-1.003710-05	1.672336-10
28	G	.0	.0	.0	.0	.0	.0
29	G	.0	.0	.0	.0	.0	.0
31	G	-7.683237-06	-1.099489-08	-1.289303-03	-2.052995-12	-9.667513-06	7.461121-11
32	G	-7.620793-06	-2.467418-08	-3.014386-03	-3.964608-12	-9.694789-06	7.438579-11
33	G	-6.363684-06	-4.289093-08	-5.403105-03	1.711738-12	-9.801288-06	6.163831-11
34	G	-5.203344-06	-5.737723-08	-7.828214-03	7.387986-12	-1.000518-05	4.453286-11
35	G	-4.066739-06	-6.694314-08	-1.027319-02	1.297246-11	-1.030904-05	2.355708-11
36	G	-3.272902-06	-6.886945-08	-1.187650-02	1.269709-11	-1.054122-05	4.530214-12
37	G	-3.275853-06	-7.020145-08	-1.339071-02	1.269744-11	-1.069074-05	6.462569-12
38	G	-3.276456-06	-7.098902-08	-1.428227-02	1.269754-11	-1.075552-05	6.975018-12
39	G	-3.278064-06	-7.290058-08	-1.645996-02	1.269768-11	-1.086458-05	7.819180-12
40	G	-3.279109-06	-7.520635-08	-1.875570-02	1.269768-11	-1.143652-05	1.196055-11
41	G	.0	-6.990829-08	-1.283375-02	1.269744-11	-1.068895-05	6.445564-12
44	G	-1.124273-03	5.005254-08	-1.231220-03	-3.314421-11	-9.667515-06	7.498518-11
45	G	-1.124292-03	-7.074925-08	-1.231220-03	2.907763-11	-9.667515-06	7.423676-11
46	G	-1.074335-03	-1.412093-07	-3.014545-03	5.767296-11	-9.694870-06	-1.991838-11
47	G	-1.074355-03	9.299206-08	-3.014546-03	-6.573862-11	-9.694871-06	1.680987-10
48	G	-1.986816-03	-3.990811-07	-1.230176-03	-1.269751-09	-1.003669-05	2.354070-10
49	G	-1.986848-03	-3.657232-07	-1.230419-03	-1.250967-09	-1.003669-05	1.000961-10

TABLE 5. (Continued)

NODE POINT		X	Y	Z	θ_X	θ_Y	θ_Z
50	G	-1.603790-03	-1.003499-08	-1.231298-03	-2.106152-12	-9.667513-06	7.461314-11
53	G	-1.675789-03	2.478475-07	-1.028363-02	-9.378501-11	-1.030905-05	2.355708-11
54	G	-1.675787-03	-3.862845-07	-1.028363-02	1.198297-10	-1.030905-05	2.355708-11
55	G	-2.141324-03	-7.429863-08	-1.028331-02	-8.272117-10	-9.597121-06	-4.608354-10
56	G	-2.782804-06	-6.369003-08	-1.186378-02	4.464700-09	-1.054122-05	-1.673080-10
57	G	-2.782978-06	-7.400662-08	-1.186379-02	-4.439313-09	-1.054122-05	1.757837-10
58	G	-2.746445-06	-6.331357-08	-1.186284-02	1.061203-06	-1.153386-05	-1.462865-08
59	G	-2.746634-06	-7.438000-08	-1.186284-02	-1.061204-06	-1.153387-05	1.471341-08
60	G	-5.583493-04	-7.155554-07	-1.231927-03	-1.095267-10	-9.667465-06	-4.735548-11
61	G	-5.583260-04	6.946244-07	-1.231927-03	1.054738-10	-9.667465-06	1.965719-10
62	G	5.428669-04	1.206876-06	-1.230182-03	4.504937-10	-9.667477-06	2.233537-10
63	G	5.429101-04	-1.228192-06	-1.230181-03	-4.545950-10	-9.667477-06	-7.412978-11
64	G	-3.227651-04	-5.023875-06	-1.284079-03	9.185374-08	-5.656575-06	4.159311-09
65	G	-3.227671-04	5.004762-06	-1.284078-03	-9.185290-08	-5.656575-06	-4.081405-09
66	G	-5.654531-05	-2.195031-06	-1.286663-03	9.198695-08	-5.656554-06	4.184356-09
67	G	-5.654943-05	2.175941-06	-1.286662-03	-9.198611-08	-5.656554-06	-4.106451-09
68	G	3.224098-04	2.712463-06	-1.284227-03	9.189469-08	-5.656572-06	4.187523-09
69	G	3.224077-04	-2.731509-06	-1.284226-03	-9.189386-08	-5.656571-06	-4.109618-09
73	G	-1.470349-06	3.336132-06	-1.446521-02	1.060500-06	-1.154174-05	-1.460081-08
74	G	-1.470346-06	2.241054-06	-1.359950-02	1.060461-06	-1.153820-05	-1.460001-08
75	G	-1.470342-06	1.350433-06	-1.289555-02	1.060452-06	-1.153663-05	-1.459971-08
76	G	-1.470337-06	4.890244-07	-1.221469-02	1.060446-06	-1.153497-05	-1.459944-08
77	G	-1.470334-06	-6.102346-08	-1.177998-02	1.060443-06	-1.153386-05	-1.459932-08
78	G	-1.203208-06	-1.014738-06	-1.070912-02	8.234275-07	-1.139481-05	-8.319583-09
79	G	-1.091720-06	-1.882797-06	-9.233523-03	7.278030-07	-1.121919-05	-5.634953-09
80	G	-9.802012-07	-2.423508-06	-7.783404-03	6.321515-07	-1.088703-05	-3.260555-09
81	G	-8.686570-07	-2.677107-06	-6.384981-03	5.364751-07	-1.038733-05	-1.199218-09
82	G	-7.570952-07	-2.684246-06	-5.069686-03	4.407776-07	-9.711111-06	5.457848-10
83	G	-6.455035-07	-2.486050-06	-3.848998-03	3.450625-07	-8.851108-06	1.971015-09
84	G	-5.338998-07	-2.124106-06	-2.751215-03	2.493338-07	-7.801649-06	3.073150-09
85	G	-4.222823-07	-1.640437-06	-1.801264-03	1.535962-07	-6.558546-06	3.849244-09
86	G	-3.505754-07	-1.285206-06	-1.280789-03	9.209261-08	-5.656556-06	4.174740-09
87	G	-2.272073-07	-5.490156-07	-4.486758-04	5.513002-08	-3.495590-06	3.252430-09
88	G	-1.363296-07	-1.545755-07	-9.347891-05	2.790161-08	-1.693996-06	1.959895-09
89	G	-1.026961-07	-9.842829-08	-5.629809-05	1.823576-08	-1.089943-06	1.362588-09
90	G	-2.161217-08	-3.138102-10	-3.148454-07	3.569710-10	-1.300478-08	1.282716-11
91	G	-1.363298-07	-1.187100-07	-6.247914-05	2.790162-08	-1.693995-06	1.959894-09
92	G	-1.363299-07	-8.284443-08	-3.147935-05	2.790163-08	-1.693994-06	1.959894-09
93	G	-1.363299-07	-2.091178-08	2.205088-05	2.790163-08	-7.840590-07	1.592510-10
94	G	-1.363299-07	-9.859759-09	7.646457-05	2.790163-08	-7.840590-07	1.592510-10
95	G	5.993252-05	9.088910-07	-5.399534-05	1.823576-08	-1.089943-06	1.362582-09
96	G	-6.028621-05	-1.102505-06	-5.399534-05	1.823576-08	-1.089943-06	1.362594-09
97	G	2.868768-05	1.005034-06	2.307403-05	2.790163-08	-7.840590-07	1.592536-10
98	G	-2.896418-05	-1.046579-06	2.307403-05	2.790163-08	-7.840590-07	1.592484-10
101	G	-7.689981-06	.0	.0	.0	.0	.0

ORIGINAL PAGE IS
OF POOR QUALITY

TABLE 5. (Continued)

NODE POINT		X	Y	Z	θ_X	θ_Y	θ_Z
102	G	-7.689724-06	3.320773-10	.0	-2.760720-11	.0	.0
103	G	-7.689189-06	6.855692-10	.0	-3.930031-11	.0	.0
104	G	-7.688156-06	8.031212-10	.0	-6.742512-11	.0	.0
105	G	-7.686740-06	4.326665-10	.0	-8.665316-11	.0	.0
106	G	-7.685315-06	-6.265928-10	.0	-7.822723-11	.0	.0
107	G	-7.683600-06	-2.954771-09	.0	-4.528668-12	.0	.0
108	G	.0	-1.295325-08	.0	-1.834300-09	.0	.0
109	G	-7.592364-06	-3.991974-08	.0	-2.221690-10	.0	.0
110	G	.0	-1.098475-07	.0	-3.324491-09	.0	.0
111	G	.0	-2.061559-07	.0	-5.495039-10	.0	.0
112	G	.0	-2.109696-07	.0	1.206848-10	.0	.0
113	G	.0	-1.171781-07	.0	2.429086-09	.0	.0
114	G	-4.042567-06	.0	.0	.0	.0	.0
115	G	-4.042389-06	-1.994396-08	.0	8.531187-10	.0	.0
173	G	-1.465059-06	-3.493582-06	-1.446522-02	-1.060501-06	-1.154175-05	1.468582-08
174	G	-1.465056-06	-2.392127-06	-1.359951-02	-1.060461-06	-1.153821-05	1.468495-08
175	G	-1.465062-06	-1.496322-06	-1.289555-02	-1.060453-06	-1.153664-05	1.468462-08
176	G	-1.465047-06	-6.298998-07	-1.221470-02	-1.060447-06	-1.153498-05	1.468432-08
177	G	-1.465043-06	-7.665144-08	-1.177998-02	-1.060444-06	-1.153387-05	1.468418-08
178	G	-1.198827-06	8.862844-07	-1.070912-02	-8.234278-07	-1.139482-05	8.424635-09
179	G	-1.087718-06	1.768695-06	-9.230526-03	-7.278032-07	-1.121919-05	5.747222-09
180	G	-9.765786-07	2.324535-06	-7.783406-03	-6.321515-07	-1.088704-05	3.377182-09
181	G	-8.654142-07	2.593649-06	-6.388981-03	-5.364750-07	-1.038734-05	1.317097-09
182	G	-7.542272-07	2.616273-06	-5.069686-03	-4.407773-07	-9.711116-06	-4.299663-10
183	G	-6.430205-07	2.433087-06	-3.848998-03	-3.450620-07	-8.851112-06	-1.860741-09
184	G	-5.317969-07	2.085215-06	-2.751214-03	-2.493332-07	-7.801651-06	-2.972047-09
185	G	-4.205595-07	1.614202-06	-1.801263-03	-1.535955-07	-6.558547-06	-3.761045-09
186	G	-3.490970-07	1.266125-06	-1.280768-03	-9.209178-08	-5.656555-06	-4.096831-09
187	G	-2.262491-07	5.418121-07	-4.486752-04	-5.512952-08	-3.495588-06	-3.200663-09
188	G	-1.357547-07	1.529267-07	-9.347868-05	-2.790136-08	-1.693994-06	-1.930996-09
189	G	-1.022650-07	9.742700-08	-5.629793-05	-1.823559-08	-1.089942-06	-1.342915-09
190	G	-2.152103-08	3.096316-10	-3.148450-07	-3.569677-10	-1.300476-08	-1.265484-11
191	G	-1.357546-07	1.175901-07	-6.247893-05	-2.790137-08	-1.693994-06	-1.930995-09
192	G	-1.357549-07	8.225337-08	-3.147917-05	-2.790138-08	-1.693993-06	-1.930995-09
193	G	-1.357549-07	2.123392-08	2.205102-05	-2.790138-08	-7.840577-07	-1.479815-10
194	G	-1.357401-07	1.096401-08	7.646183-05	-2.790138-08	-7.840577-07	-1.479815-10
195	G	5.993398-05	-9.098597-07	-5.399520-05	-1.823559-08	-1.089942-06	-1.342910-09
196	G	-6.028663-05	1.101518-06	-5.399520-05	-1.823559-08	-1.089942-06	-1.342921-09
197	G	2.868862-05	-1.004702-06	2.307416-05	-2.790138-08	-7.840577-07	-1.479841-10
198	G	-2.896315-05	1.046891-06	2.307416-05	-2.790138-08	-7.840577-07	-1.479789-10
201	G	-3.290189-06	.0	.0	.0	.0	.0
202	G	-3.289185-06	1.209193-09	.0	-3.979187-11	.0	.0
203	G	-3.288165-06	1.755771-09	.0	-1.573476-10	.0	.0
204	G	-3.284732-06	2.001011-09	.0	-2.381963-10	.0	.0
205	G	-3.279025-06	6.072657-10	.0	-2.078983-10	.0	.0

TABLE 5. (Concluded)

NODE POINT		X	Y	Z	θ_X	θ_Y	θ_Z
206	G	-3.276447-06	-5.840547-10	.0	-8.822373-11	.0	.0
207	G	-3.276088-06	-3.460962-10	.0	4.255926-13	.0	.0
208	G	.0	1.379519-09	.0	8.752490-10	.0	.0
209	G	-3.276049-06	6.783781-09	.0	-2.613700-13	.0	.0
210	G	-3.276267-06	6.394885-09	.0	-2.305589-11	.0	.0
211	G	.0	5.807190-09	.0	-1.761742-11	.0	.0
212	G	-3.276537-06	5.210239-09	.0	3.132491-11	.0	.0
213	G	-3.276709-06	5.710188-09	.0	-4.417737-11	.0	.0
214	G	-3.277155-06	4.448446-09	.0	-3.499106-11	.0	.0
215	G	-3.277563-06	3.158415-09	.0	-2.597921-11	.0	.0
216	G	.0	1.993017-09	.0	-1.598083-11	.0	.0
217	G	-3.278669-06	8.009127-10	.0	-3.133443-11	.0	.0
218	G	-3.279136-06	-2.737032-12	.0	7.449350-14	.0	.0
219	G	.0	.0	.0	.0	.0	.0
220	G	-3.279682-06	4.054155-11	.0	-1.831629-11	.0	.0
300	G	.0	.0	.0	.0	.0	.0
400	G	.0	.0	.0	.0	.0	.0

ORIGINAL PAGE IS
OF POOR QUALITY

TABLE 6. SEVENTH MODE FOR THE SHUTTLE MODEL FOR LIFT-OFF

Eigenvalue = 1.2084 + 2

NODE POINT		X	Y	Z	θ_X	θ_Y	θ_Z
1	G	-9.461641-05	1.851734-02	-6.604425-06	-6.654941-05	7.526708-08	-2.086936-05
2	G	-9.213072-05	1.742092-02	-1.748701-05	-6.680391-05	7.439597-08	-1.966580-05
3	G	-8.798435-05	1.700533-02	-3.694945-05	-6.168611-05	3.230395-08	-2.066154-05
4	G	-8.720338-05	1.062075-02	-4.028860-05	-3.929587-05	-6.439027-08	-2.770336-05
5	G	-8.601251-05	3.900141-03	-1.767293-05	-2.198761-05	-1.746919-07	-3.121069-05
6	G	-8.485653-05	-7.518174-04	1.470004-05	-9.453448-06	-2.648251-07	-3.099626-05
7	G	-8.407051-05	-3.365291-03	3.703876-05	-5.330882-06	-2.956134-07	-2.980210-05
8	G	-8.352434-05	-4.369899-03	4.649188-05	-4.608217-06	-3.240594-07	-2.866814-05
9	G	-6.937408-05	-9.823830-05	1.094969-04	-5.735599-06	-6.705897-07	-3.390044-05
10	G	-1.633437-03	1.174673-04	-1.326335-04	-5.733941-06	-5.580987-07	-3.250163-05
11	G	1.436758-03	1.253870-04	3.482305-04	-5.509541-06	-3.153945-07	-3.191114-05
12	G	3.183412-03	-1.790688-03	-9.731944-04	-9.453779-06	-2.643068-07	-3.099779-05
13	G	6.074805-03	-1.725312-03	-1.897464-03	-1.028370-05	-1.712465-07	-3.101220-05
14	G	8.626367-03	-3.167692-03	-2.779469-03	-1.100034-05	2.430074-07	-3.099157-05
15	G	1.117795-02	-4.606015-03	-3.745822-03	-1.177243-05	6.892965-07	-3.096918-05
16	G	1.372895-02	-6.041073-03	-4.783255-03	-1.226018-05	9.711726-07	-3.095484-05
17	G	-3.294923-03	-1.770687-03	1.002596-03	-9.453786-06	-2.653493-07	-3.099780-05
18	G	-6.187855-03	-1.725736-03	1.927915-03	-1.030444-05	-3.611646-07	-3.101223-05
19	G	-8.743375-03	-3.167473-03	2.838216-03	-1.104095-05	-7.868890-07	-3.099060-05
20	G	-1.129646-02	-4.605530-03	3.835248-03	-1.183512-05	-1.245918-06	-3.096710-05
21	G	-1.384914-02	-6.040218-03	4.905407-03	-1.233707-05	-1.535987-06	-3.095203-05
22	G	-1.188480-04	-5.755892-03	6.692348-05	-5.330419-06	-2.950241-07	-2.980248-05
23	G	-1.455723-04	-7.792960-03	8.917632-05	-9.968780-07	-3.207659-07	-3.341454-05
24	G	-1.787918-04	-1.175970-02	1.168347-04	1.796699-05	-4.275303-07	-4.921561-05
25	G	-2.157919-04	-1.696663-02	1.480309-04	1.891183-05	-4.325814-07	-5.006799-05
26	G	-8.366278-05	-8.880895-03	9.700457-05	-4.616291-06	-3.339544-07	-2.983327-05
28	G	.0	.0	.0	.0	.0	.0
29	G	.0	.0	.0	.0	.0	.0
31	G	-3.596430-07	-4.494795-03	1.948602-06	6.508794-08	-4.644846-08	-2.349897-05
32	G	-3.486535-07	6.186686-04	-9.177658-06	-2.027865-07	-4.179327-08	-2.197526-05
33	G	7.730531-07	6.706254-03	-1.792599-05	-1.324063-06	-1.902807-08	-1.477181-05
34	G	1.897401-06	1.029509-02	-2.029233-05	-2.444043-06	7.167009-09	-2.762114-06
35	G	2.990102-06	1.022366-02	-1.564872-05	-3.543601-06	3.522764-08	1.327303-05
36	G	3.756697-06	7.477295-03	-7.982932-06	-3.758453-06	5.128373-08	2.917404-05
37	G	3.986842-06	2.613255-03	2.375291-06	-3.762142-06	6.116928-08	3.431271-05
38	G	4.034018-06	-7.195204-04	9.192937-06	-3.763256-06	6.624897-08	3.612504-05
39	G	4.175994-06	-9.905699-03	2.793189-05	-3.764745-06	7.606588-08	3.981751-05
40	G	4.305342-06	-2.357923-02	5.687712-05	-3.764745-06	1.535318-07	7.193196-05
41	G	.0	4.492657-03	-8.538140-07	-3.762142-06	6.117458-08	3.434059-05
44	G	-2.959595-03	-4.618764-03	2.575155-05	5.244669-08	-4.691223-08	-2.349882-05
45	G	2.948029-03	-4.624256-03	-1.420260-05	5.527536-08	-4.608848-08	-2.349886-05
46	G	-2.858348-03	6.291133-04	6.527330-07	-1.965360-07	-5.001159-08	-2.198482-05
47	G	2.847213-03	6.293911-04	-1.938565-05	-1.966823-07	-3.376738-08	-2.198459-05
48	G	-2.769945-03	-4.901750-03	4.832756-04	-4.606202-06	-3.332746-07	-2.866125-05
49	G	2.687211-03	-4.886551-03	-3.833262-04	-4.601083-06	-3.150602-07	-2.866149-05

TABLE 6. (Continued)

NODE POINT		X	Y	Z	θ_X	θ_Y	θ_Z
50	G	-7.791381-06	-4.666171-03	7.290763-07	7.111145-08	-4.635909-08	-2.349919-05
53	G	-6.089073-04	1.080455-02	-1.885389-04	-3.550180-06	3.508616-08	1.327303-05
54	G	6.263185-04	1.080428-02	1.571962-04	-3.550087-06	3.536712-08	1.327303-05
55	G	-9.863599-05	1.158136-02	-1.738739-05	-6.680668-05	7.439580-08	-1.966577-05
56	G	-5.199765-03	7.502983-03	-6.361990-04	-3.761147-06	5.128373-08	2.930773-05
57	G	5.202862-03	7.502988-03	6.196761-04	-3.760952-06	5.128373-08	2.930794-05
58	G	-5.573184-03	7.504850-03	-6.818713-04	8.361593-07	-8.399333-07	9.605952-06
59	G	5.581324-03	7.504855-03	6.653071-04	9.480110-07	8.608509-07	9.626399-06
60	G	3.671366-03	-4.665876-03	5.281969-05	7.959704-08	-4.599577-08	-2.350174-05
61	G	-3.677471-03	-4.666167-03	-4.884575-05	7.976714-08	-4.690543-08	-2.350177-05
62	G	3.672862-03	-4.642189-03	3.105462-06	6.133012-08	-4.675523-08	-2.350021-05
63	G	-3.667342-03	-4.641970-03	1.147869-06	6.141165-08	-4.614836-08	-2.350018-05
64	G	-8.563167-03	-5.931247-03	7.858327-04	1.360724-06	-2.185190-06	-3.059964-05
65	G	8.571150-03	-5.935306-03	-7.867659-04	1.425287-06	2.125478-06	-3.061172-05
66	G	-9.285519-03	-5.884417-03	7.294893-04	1.364775-06	-2.184986-06	-3.059959-05
67	G	9.296627-03	-5.885611-03	-7.284544-04	1.429382-06	2.125272-06	-3.061167-05
68	G	-8.313284-03	-5.782533-03	7.701082-04	1.365074-06	-2.184835-06	-3.059957-05
69	G	8.328826-03	-5.779623-03	-7.710743-04	1.429627-06	2.125124-06	-3.061165-05
73	G	-6.439463-03	5.316337-03	-8.235071-04	8.388316-07	-8.597703-07	9.445638-06
74	G	-6.438609-03	6.023510-03	-7.588307-04	8.372354-07	-8.507688-07	9.503749-06
75	G	-6.438136-03	6.600818-03	-7.066241-04	8.369411-07	-8.468332-07	9.532467-06
76	G	-6.437108-03	7.159042-03	-6.561757-04	8.367279-07	-8.426917-07	9.565207-06
77	G	-6.436416-03	7.516208-03	-6.240961-04	8.366192-07	-8.399333-07	9.583132-06
78	G	-6.641799-03	8.485941-03	-5.660929-04	9.796038-07	-9.078046-07	3.475964-06
79	G	-6.722871-03	8.809653-03	-4.500323-04	1.036352-06	-9.905542-07	-4.988682-07
80	G	-6.795741-03	8.501835-03	-3.172867-04	1.091381-06	-1.120395-06	-5.401947-06
81	G	-6.860723-03	7.479526-03	-1.641747-04	1.144493-06	-1.275070-06	-1.073306-05
82	G	-6.917692-03	5.722623-03	1.069075-05	1.195590-06	-1.440990-06	-1.604082-05
83	G	-6.966506-03	3.269337-03	2.073888-04	1.244560-06	-1.613867-06	-2.095121-05
84	G	-7.007291-03	2.027494-04	4.259741-04	1.291345-06	-1.799739-06	-2.520889-05
85	G	-7.039891-03	-3.367017-03	6.679646-04	1.336056-06	-2.016655-06	-2.871491-05
86	G	-7.056559-03	-5.870642-03	8.375408-04	1.363430-06	-2.184969-06	-3.059946-05
87	G	-7.077113-03	-1.167846-02	1.265728-03	1.369672-06	-2.423238-06	-3.295952-05
88	G	-7.083066-03	-1.604336-02	1.589174-03	1.371671-06	-2.466169-06	-3.339951-05
89	G	-7.083501-03	-1.677918-02	1.643664-03	1.371939-06	-2.467693-06	-3.341896-05
90	G	-7.083664-03	-1.916370-02	1.819840-03	1.372076-06	-2.468455-06	-3.343006-05
91	G	-7.083541-03	-1.665889-02	1.634729-03	1.371680-06	-2.466914-06	-3.340691-05
92	G	-7.084017-03	-1.727416-02	1.680261-03	1.371694-06	-2.467244-06	-3.341002-05
93	G	-7.084035-03	-1.832992-02	1.758226-03	1.371694-06	-2.696460-06	-3.657041-05
94	G	-7.084035-03	-2.086791-02	1.945361-03	1.371694-06	-2.696460-06	-3.657041-05
95	G	-5.104352-03	-1.674329-02	1.722272-03	1.371939-06	-2.467706-06	-3.341897-05
96	G	-5.376539-03	-1.689461-02	1.722255-03	1.371939-06	-2.467682-06	-3.341897-05
97	G	-5.643850-03	-1.827948-02	1.808520-03	1.371694-06	-2.696454-06	-3.657040-05
98	G	-5.842120-03	-1.838034-02	1.808532-03	1.371694-06	-2.696465-06	-3.657040-05
101	G	-3.443062-07	.0	.0	.0	.0	.0

ORIGINAL PAGE IS
OF POOR QUALITY

TABLE 6. (Continued)

NODE POINT		X	Y	Z	θ_X	θ_Y	θ_Z
102	G	-3.451906-07	-1.021590-09	.0	1.168724-10	.0	.0
103	G	-3.473158-07	-2.025712-09	.0	1.557043-10	.0	.0
104	G	-3.509196-07	-2.236873-09	.0	2.180321-10	.0	.0
105	G	-3.549653-07	-1.401908-09	.0	2.030516-10	.0	.0
106	G	-3.574412-07	-5.491061-10	.0	1.210166-10	.0	.0
107	G	-3.596619-07	-8.657051-10	.0	-1.295878-12	.0	.0
108	G	.0	-3.107161-09	.0	-2.158055-10	.0	.0
109	G	-3.548297-07	-7.288753-09	.0	2.794655-10	.0	.0
110	G	.0	-5.616074-08	.0	-3.704235-09	.0	.0
111	G	.0	-2.068041-07	.0	-5.971356-10	.0	.0
112	G	.0	-2.097253-07	.0	1.218594-10	.0	.0
113	G	.0	-1.144009-07	.0	2.361894-09	.0	.0
114	G	3.019882-06	.0	.0	.0	.0	.0
115	G	3.019918-06	-1.974835-08	.0	8.481726-10	.0	.0
173	G	6.449347-03	5.311578-03	8.032961-04	9.507189-07	8.801610-07	9.466147-06
174	G	6.448691-03	6.020296-03	7.370952-04	9.491361-07	8.713803-07	9.524207-06
175	G	6.448017-03	6.596847-03	6.836400-04	9.488024-07	8.675505-07	9.552905-06
176	G	6.446986-03	7.158279-03	6.319841-04	9.485607-07	8.635272-07	9.585627-06
177	G	6.446297-03	7.516215-03	5.991304-04	9.484375-07	8.608509-07	9.603544-06
178	G	6.651991-03	8.487506-03	5.379300-04	1.080982-06	9.232804-07	3.488412-06
179	G	6.733187-03	8.612599-03	4.197405-04	1.133423-06	9.994621-07	-4.903812-07
180	G	6.806167-03	8.505619-03	2.861788-04	1.183783-06	1.118627-06	-5.397578-06
181	G	6.871248-03	7.483596-03	1.339756-04	1.232465-06	1.260290-06	-1.073277-05
182	G	6.928334-03	5.726441-03	-3.807090-05	1.278775-06	1.412597-06	-1.604436-05
183	G	6.977273-03	3.272418-03	-2.308849-04	1.322812-06	1.572827-06	-2.095808-05
184	G	7.018039-03	2.046852-04	-4.423742-04	1.364525-06	1.748623-06	-2.521842-05
185	G	7.050688-03	-3.366529-03	-6.768867-04	1.404047-06	1.958962-06	-2.872628-05
186	G	7.067301-03	-5.871188-03	-8.412910-04	1.428619-06	2.125255-06	-3.061155-05
187	G	7.087966-03	-1.168124-02	-1.258634-03	1.434557-06	2.361453-06	-3.297229-05
188	G	7.093928-03	-1.604784-02	-1.573989-03	1.436651-06	2.403944-06	-3.341235-05
189	G	7.094365-03	-1.678391-02	-1.627115-03	1.436931-06	2.405449-06	-3.343181-05
190	G	7.094728-03	-1.916935-02	-1.798854-03	1.437075-06	2.406202-06	-3.344291-05
191	G	7.094804-03	-1.666359-02	-1.618402-03	1.436660-06	2.404683-06	-3.341976-05
192	G	7.094861-03	-1.727909-02	-1.662792-03	1.436675-06	2.405011-06	-3.342287-05
193	G	7.094899-03	-1.833525-02	-1.738790-03	1.436675-06	2.628395-06	-3.658448-05
194	G	7.095557-03	-2.087422-02	-1.921057-03	1.436675-06	2.628395-06	-3.658448-05
195	G	5.117939-03	-1.674446-02	-1.709233-03	1.436931-06	2.405462-06	-3.343182-05
196	G	5.383261-03	-1.690295-02	-1.709216-03	1.436931-06	2.405438-06	-3.343182-05
197	G	5.656700-03	-1.828242-02	-1.791466-03	1.436675-06	2.628389-06	-3.658448-05
198	G	5.849966-03	-1.838806-02	-1.791478-03	1.436675-06	2.628400-06	-3.658448-05
201	G	5.129762-06	.0	.0	.0	.0	.0
202	G	5.054149-06	-1.000575-07	.0	2.320324-09	.0	.0
203	G	4.982554-06	-1.474391-07	.0	1.197893-08	.0	.0
204	G	4.711187-06	-1.715627-07	.0	1.901268-08	.0	.0
205	G	4.246463-06	-6.229396-08	.0	1.641848-08	.0	.0

TABLE 6. (Concluded)

NODE POINT		X	Y	Z	θ_X	θ_Y	θ_Z
206	G	4.036468-06	3.169510-08	.0	7.173282-09	.0	.0
207	G	4.065697-06	1.742968-08	.0	-3.630569-11	.0	.0
208	G	.0	-1.778531-07	.0	-7.445636-08	.0	.0
209	G	4.001585-06	-6.090972-07	.0	-5.334870-10	.0	.0
210	G	4.018710-06	-5.680490-07	.0	1.516300-09	.0	.0
211	G	.0	-5.449181-07	.0	1.564898-09	.0	.0
212	G	4.040466-06	-4.957583-07	.0	-3.167117-09	.0	.0
213	G	4.053225-06	-5.614825-07	.0	3.420040-09	.0	.0
214	G	4.086258-06	-4.616737-07	.0	2.574764-09	.0	.0
215	G	4.127140-06	-3.518986-07	.0	1.863006-09	.0	.0
216	G	.0	-2.440710-07	.0	1.141706-09	.0	.0
217	G	4.246674-06	-1.073854-07	.0	3.750085-09	.0	.0
218	G	4.365146-06	1.461054-10	.0	-3.913139-12	.0	.0
219	G	.0	.0	.0	.0	.0	.0
220	G	4.361970-06	-5.599188-09	.0	2.295635-09	.0	.0

ORIGINAL PAGE IS
OF POOR QUALITY

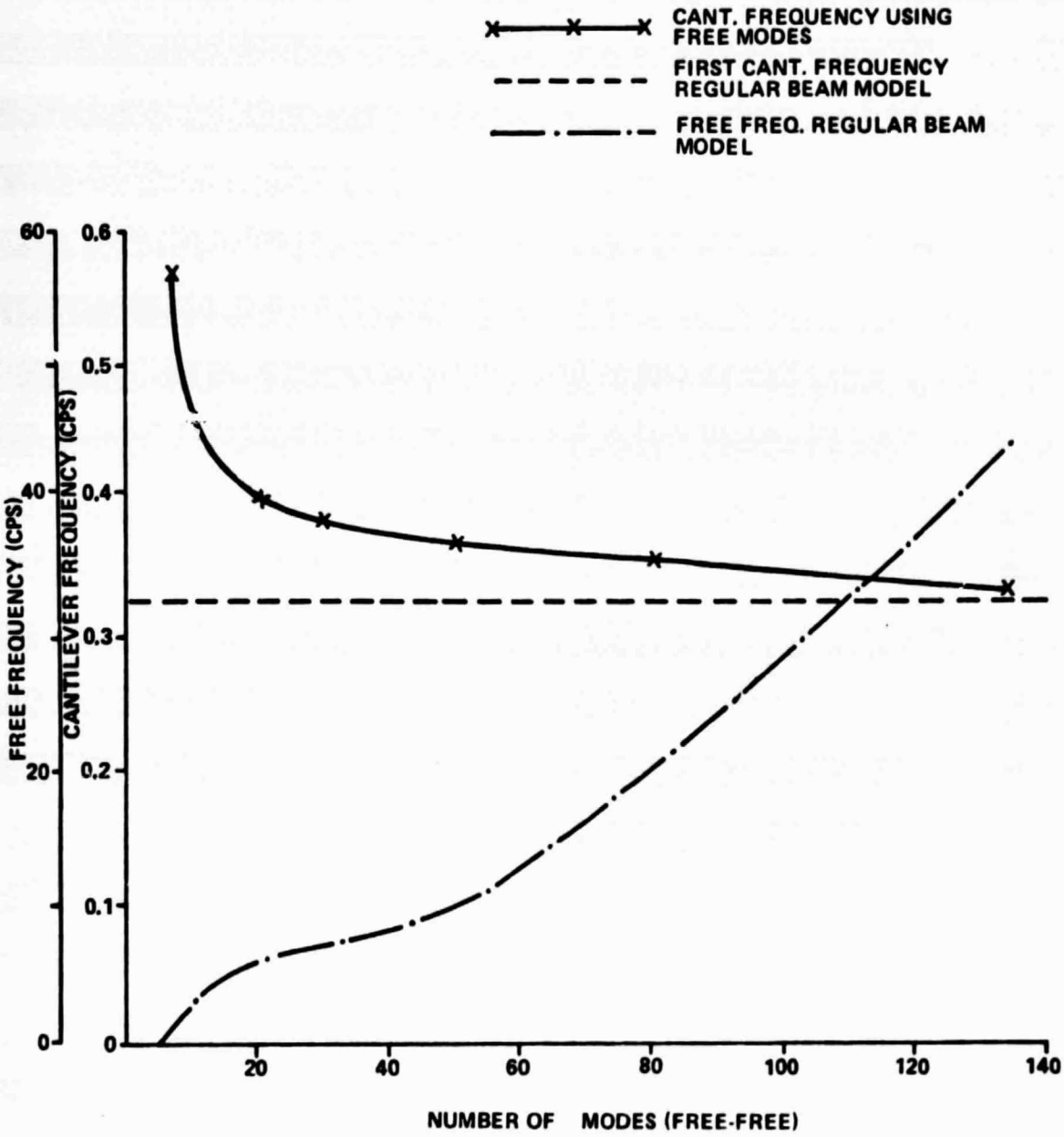

Figure 5. Number of free-free modes versus cantilever frequency.

REFERENCES

1. Dynamic Analysis of Shell of Revolution — DYNASOR. Document Number D5-14293-3, Boeing Company, New Orleans, April 12, 1971.

2. Shuttle System Dynamics Loads Analysis. Document Number MCR-75-3, Martin Marietta Corporation, Denver, Colorado, January 1975.

3. Martin, Harold C.: Introduction to Matrix Methods of Structural Analysis. McGraw Hill Book Company, St. Louis, 1966.

4. Space Shuttle Modal Characteristics for Loads, Pogo, and Control Studies. NASA-George C. Marshall Space Flight Center Memorandum ED23-75-49, April 2, 1975.

5. Hurty, Walter C. and Rubinstein, Moshe F.: Dynamics of Structures. Prentice-Hall, Inc., Englewood Cliffs, New Jersey, 1964.

APPROVAL

SPACE SHUTTLE LIFT-OFF DYNAMIC MODEL

By D. Christian

The information in this report has been reviewed for security classification. Review of any information concerning Department of Defense or Atomic Energy Commission programs has been made by the MSFC Security Classification Officer. This report, in its entirety, has been determined to be unclassified.

This document has also been reviewed and approved for technical accuracy.

J. A. LOVINGOOD
Director, Systems Dynamics Laboratory

U. S. GOVERNMENT PRINTING OFFICE 1976-640-255/304 REGION NO. 4