General Disclaimer

One or more of the Following Statements may affect this Document

- This document has been reproduced from the best copy furnished by the organizational source. It is being released in the interest of making available as much information as possible.

- This document may contain data, which exceeds the sheet parameters. It was furnished in this condition by the organizational source and is the best copy available.

- This document may contain tone-on-tone or color graphs, charts and/or pictures, which have been reproduced in black and white.

- This document is paginated as submitted by the original source.

- Portions of this document are not fully legible due to the historical nature of some of the material. However, it is the best reproduction available from the original submission.

Produced by the NASA Center for Aerospace Information (CASI)

X-932-76-5
PREPRINT

NASA TM X- 71093

SATELLITE-TO-SATELLITE SYSTEM AND ORBITAL ERROR ESTIMATES

(NASA-TM-X-71093) SATELLITE-TO-SATELLITE SYSTEM AND ORBITAL ERROR ESTIMATES (NASA) 34 p HC $4.00 CSCL 22A
N76-22249
Unclas
G3/17 27494

P. E. SCHMID
P. D. ARGENTIERO
F. O. VONBUN

JANUARY 1976

MAY 1976
RECEIVED
NASA STI FACILITY
INPUT BRANCH

GODDARD SPACE FLIGHT CENTER
GREENBELT, MARYLAND

X-932-76-5
Preprint

SATELLITE-TO-SATELLITE TRACKING SYSTEM AND ORBITAL ERROR ESTIMATES

P. E. Schmid
P. D. Argentiero
F. O. Vonbun

January 1976

Presented at the Precision Time and
Time Interval Conference NASA-GSFC
December 2-4, 1975

GODDARD SPACE FLIGHT CENTER
Greenbelt, Maryland

SATELLITE-TO-SATELLITE TRACKING SYSTEM AND ORBITAL ERROR ESTIMATES

P. E. Schmid
P. D. Argentiero
F. O. Vonbun
NASA-Goddard Space Flight Center

ABSTRACT

Satellite-to-satellite tracking and orbit computation accuracy is being evaluated on the basis of data obtained from near Earth spacecraft via the geostationary ATS-6. The near Earth spacecraft involved are Apollo-Soyuz, GEOS-3 and NIMBUS-6. In addition ATS-6 is being tracked by a new scheme wherein a single ground transmitter interrogates several ground based transponders via ATS-6 to achieve the precision geostationary orbits essential in satellite-to-satellite orbit computation. Also one way Doppler data is being recorded aboard NIMBUS-6 to determine the position of meteorological platforms. Accuracy assessments associated with the foregoing mission related experiments are discussed.

CONTENTS

	Page
ABSTRACT	iii
1.0 INTRODUCTION	1
2.0 TRACKING SYSTEM PRINCIPLES	2
2.1 Two Way Satellite-to-Satellite Tracking	4
2.2 NIMBUS-6 One Way Doppler Tracking	14
3.0 EXPERIMENTAL RESULTS	15
3.1 Satellite-to-Satellite Orbits	16
3.2 ATS-6 Trilateration Orbits	22
3.3 NIMBUS-6 Doppler Bias Recovery	22
4.0 CONCLUSIONS	26
REFERENCES	26

PRECEDING PAGE BLANK NOT FILMED

LIST OF ILLUSTRATIONS

Figure		Page
1	Structure of Tracking Signal	3
2	Basic Tracking Geometry	5
3	ATS-6 Trilateration Tracking	6
4	Tracking Signal Power Levels and Pointing	7
5	Data Processing for Satellite-to-Satellite Orbit Computation	8
6	Ground Station Signal Generation to ATS-6	10
7	Signal Translation by the ATS-6	10
8	NIMBUS-6 Transponder	11
9	One Way Doppler Location of Beacon	15
10	Range Rate Resolution	17
11	Typical GEOS-3 Per Pass Orbit Residuals	20
12	GEOS-3 Residual Summary	20
13	Apollo/ATS-6 Satellite-to-Satellite Range Rate Residual	21
14	Tracking System Noise	23
15	ATS-6 Total Position Error	23
16	Effect of Solar Pressure on Geostationary Orbits	24
17	Typical One Way Doppler Measurement	25
18	One Way Doppler Bias Recovery	25

LIST OF TABLES

Table		Page
1	NIMBUS Doppler Cycle Count	13
2	Tracking System Measurement Resolution	16

1.0 INTRODUCTION

Orbit determination accuracy of . orbiting spacecraft is primarily a function of the:

- knowledge of the Earth's gravity field, atmospheric drag, solar pressure, solar and lunar gravity effects,
- tracking system performance and validity of atmospheric refraction corrections, and
- tracking geometry and station location accuracy.

The tracking system makes measurements such as range, range rate, angles and direction cosines to a spacecraft relative to a given tracking station. This data, typically on magnetic tape, is preprocessed (i.e. edited, pre-smoothed, changed to metric units, combined with calibration constants and so on) prior to being used as input to an orbit computation computer program. The quantity of tracking data required to achieve a desired orbital accuracy is directly linked with the spacecraft-to-tracking station relative geometry and dynamics. The orbit computation program is a means of mathematically providing a "best fit" (usually in a least-squares sense) of the measured tracking data to the physical laws of orbital mechanics.

The span of data used for an orbit determination may be as short as a few minutes, such as during critical launch or injection maneuvers, or data sampling over a period of several days may be used during high eccentricity earth orbits and planetary trajectories.

Assuming reasonable tracking geometry the accuracy of spacecraft position and velocity determination will be primarily limited by tracking system performance for any computation spanning the data collection interval. That is, if continuous tracking is provided from a set of well surveyed stations the computation is essentially one of geometry. On the other hand the accuracy of orbit prediction based on an initial spacecraft vector determination will be degraded as a function of time in direct relation to the accuracy to which physical parameters are modeled. This modeling includes gravitational fields, atmospheric drag and refraction effects, solar pressure, station location determination and so on. The most critical of these modeling parameters in terms of orbit determination accuracy is the gravity field model which at present is generally expressed in terms of a spherical harmonic expansion.

The question to be answered is what does one mean by "accuracy" and how is it to be measured? For the tracking system the accuracy of measurement is usually determined by means of static collimation tower tests where known distances, angles, and zero Doppler conditions are predictable to the limit of physical survey, time delay measurement, and frequency measurement. Predicting tracking system performance under dynamic conditions is usually accomplished by observing the behavior of associated sub-systems under simulated signal conditions. Experience has shown that the tracking system accuracy can be specified, implemented and verified with a high degree of confidence (ref. 1). On the other hand it is much more difficult to verify the accuracy of the complex modeling required to predict orbits. There is a continuing effort underway to improve our knowledge of such fundamental modeled parameters as the Earth's mass, the universal gravitational constant, speed of light, drag coefficients and so on. For it is easily shown that assuming perfect modeling the propagated (i.e. predicted) orbit errors due to tracking system uncertainties can invariably meet all current operational requirements for navigation, telemetry acquisition and satellite based Earth platform location. In this regard it is well established that satellite position errors of tens of meters will propagate into kilometers after only one or two weeks of orbit prediction. Such errors can only be reduced by increasing the number of tracking observation periods or improving the Earth's gravitational field modeling.

This paper presents a number of orbit error assessments as derived from satellite-to-satellite tracking and orbit computation involving the geostationary ATS-6 and the near Earth GEOS-3, Apollo-Soyuz, and NIMBUS-6.

2.0 TRACKING SYSTEM PRINCIPLES

All of NASA's range and range rate radio satellite tracking systems consist of narrowband phase modulated signals where several ranging tones are sequentially modulated onto the carrier to provide a degree of range measurement ambiguity resolution. Once the ambiguity is resolved only the highest frequency tone is transmitted to assure maximum resolution. The high resolution range tone extends from 20kHz to 500kHz depending on the specific tracking system under consideration. The range observation is basically a propagation time delay measurement from ground station to satellite and back. In the case of the current NASA satellite-to-satellite tracking experiments (e.g. ground station to the geostationary ATS-6 to near Earth satellite) four distinct propagation links are involved.

The range rate relative to a given tracking station is generally observed by counting cycles of carrier Doppler where each cycle of Doppler corresponds

to a half wavelength change in total path length at the operating frequency. All satellite-to-satellite tracking is currently conducted at a nominal carrier frequency of 2GHz and hence each cycle of two way Doppler corresponds to 7.5CM of path length change. Strictly speaking the basic measurement is one of range change and only becomes a range rate when averaged over the Doppler counting interval.

The foregoing is depicted in simplified form in Figure 1 which is appropriate for the satellite-to-satellite tracking associated with the geostationary ATS-6 tracking of GEOS-3, Apollo-Soyuz and NIMBUS-6. Satellite-to-satellite tracking permits the computation of near Earth satellite orbits by means of a single tracking station. NASA is implementing an operational tracking system of this type in the 1980 time frame by means of the geostationary Tracking and Data Relay Satellite System (ref. 2).

BASIC MODULATION SCHEME

$S(t) = \cos(2\pi f_o t + \beta \sin 2\pi f_m t)$

$\beta = 0.5$ RADIANS

$f_o = \frac{C}{\lambda_o} = 2000$ MHz

$f_m = 100$ KHz

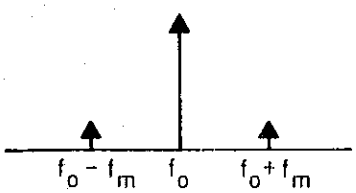

FREQUENCY SPECTRUM

BASIC RANGE RATE DETERMINATION

AVERAGE DOPPLER $= f_D = \frac{-2\bar{\dot{R}} f_o}{C} = \frac{-\bar{\dot{R}}}{\lambda_o/2} \cdot \frac{N}{T}$ Hz

N = INTEGRAL NUMBER OF CYCLES

T = ELAPSED MEASUREMENT TIME (0.2 TO 10 SECONDS)

Figure 1. Structure of Tracking Signal

2.1 TWO WAY SATELLITE-TO-SATELLITE TRACKING

In two way tracking a signal is transmitted from a well surveyed ground station to a transponder which frequency translates the signal for re-transmission either to another spacecraft or directly back to the ground station. This paper deals primarily with satellite-to-satellite tracking and hence the ATS-6/NIMBUS-6 tracking system (ref. 3 & 4) will be used as an example. Except for minor details involving the near Earth spacecraft transponder this discussion also applies to the ATS-6/GEOS-3 and ATS-6/Apollo-Soyuz tracking.

The tracking of a near Earth satellite via a geostationary satellite might be accomplished in a number of different ways. For example, tracking signal generation and data demodulation might be performed directly at the synchronous satellite and sent by telemetry to a ground station. The advantage of such a scheme is that inter-satellite measurements (synchronous to low satellite) can be separated from the total path delay. The principal disadvantage is that the relative complexity of a total ground station must be placed in orbit. Another possibility which is easier to implement electronically is the "bent pipe" concept where tracking signals between ground station and near Earth satellite are relayed back and forth via the geostationary satellite. In this scheme all tracking data demodulation, digitizing and recording is performed at the ground station. The disadvantages is that total path delay is combined into a single measurement which in turn adds a degree of complexity to the orbit determination program. It might be thought that the geostationary satellite motion is negligible over the observation interval, however this is not the case. The reason is that geostationary satellites, are generally not maintained at zero degrees inclination. Nominal values of inclination maintained for current NASA geostationary spacecraft extend from 1.5° to 6°. Such synchronous orbits are apparently more stable than zero degree inclination orbits. As a result the slant range relative to an observing ground station typically undergoes a sinusoidal variation of several hundred kilometers over a 24 hour period. This effect will also be reflected in the corresponding ground to geostationary satellite range-rate (Doppler) measurement as tens of meters per second.

The "bent pipe" scheme has been implemented for all NASA satellite-to-satellite tracking and orbit computation to date. The geometry of such tracking is shown in Figure 2. This concept has also been used in a "trilateration tracking" scheme (ref. 5) as indicated by Figure 3 to pinpoint ATS-6 while stationed over the U.S.A. at 94°W Longitude. Recent experience indicates that the success of satellite-to-satellited orbit determination is to a large measure dependent on the accuracy of the a priori estimates used for the geostationary satellite. Conventional one or two station tracking of geostationary satellites, while perfectly suitable for most meteorological image registration and data acquisition

MEASUREMENT TYPE	RESOLUTION	APPLICABLE FREQUENCY
RANGE $(R_1 + R_2)$	2 METERS	100 KHZ
DOPPLER $(\dot{R}_1 + \dot{R}_2)$	0.05 cm/sec	2000 MHZ

Figure 2. Basic Tracking Geometry

purposes, is not generally adequate for satellite-to-satellite applications. Trilateration tracking provides the geometry and tracking data resolution which results in geostaticnary satellite a priori estimates at the 100 meter or better level.

The same scheme is being used to track ATS-6 at its current position of 35°E Longitude with interrogation from the Madrid site and transponders at Madrid, Ascension Island and Johannesburg.

- SYSTEM DESCRIPTION

ATS-6 is in an earth-synchronous orbit at 35,800km.

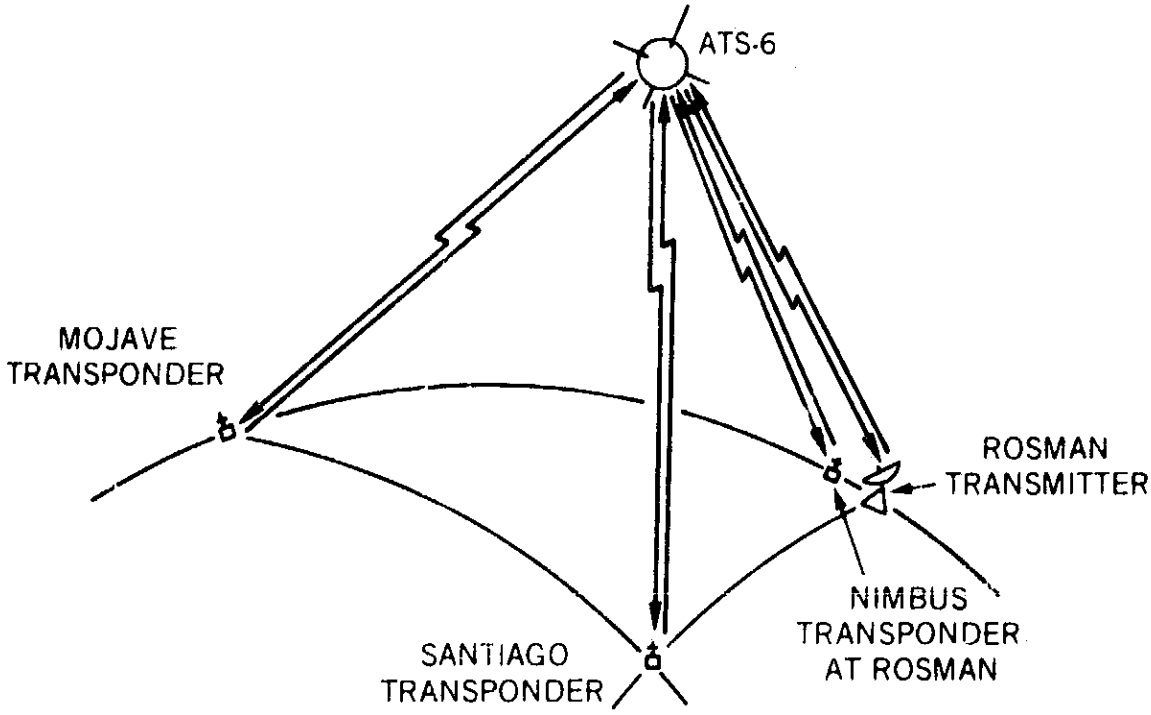

Figure 3. ATS-6 Trilateration Tracking

NIMBUS-6 is in a sun-synchronous orbit at 1100km. Figure 2 shows this basic geometry and the location of a ground tracking station.

The vital ATS elements for tracking Nimbus and relaying Nimbus experiment data to the ground are a communications transponder and a 2-GHz nine-meter parabolic antenna. The transponder translates 6 GHz ground station signals into 2 GHz signals sent to Nimbus and also translates the 2 GHz signals from Nimbus into 4 GHz signals which are sent to the ground. Figure 4 shows these frequency links between Nimbus, ATS, and the ground. The antenna has a nominal beam width of 1.4 degrees and a gain of 36 dB. It can be electronically scanned ±5 degrees off boresight, and has monopulse capability to track the Nimbus satellite. However, the primary ATS antenna pointing mode for the tracking experiment is for the ground station to program the ATS with computed pitch and roll commands based upon ATS and Nimbus ephemeris data.

Nimbus observes ATS by means of an up-looking 2 GHz antenna array which has a nominal gain of 15 dB corresponding to a 3 dB beam width of 25 degrees. The system consists of the gimbaled antenna assembly, the gimbal drive electronics, the power amplifier, transponder, and the digital electronics. The

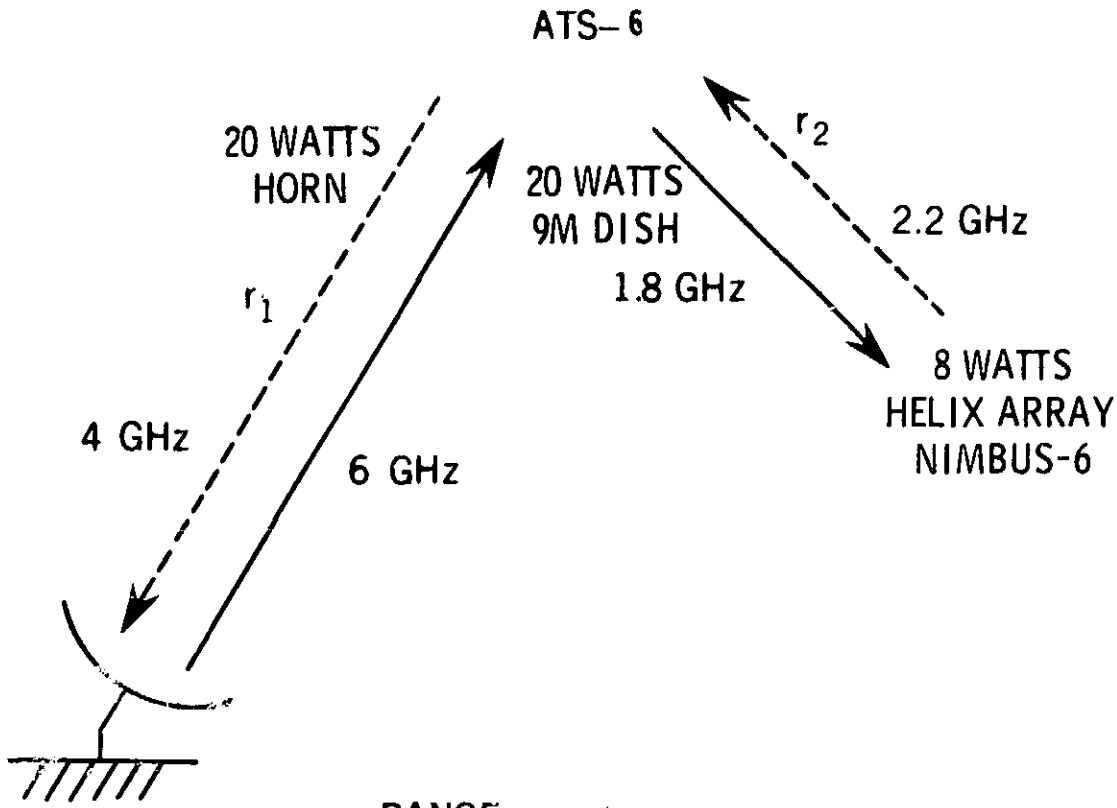

$$\text{RANGE} = r_1 + r_2$$

$$\text{DOPPLER} = -\frac{2f_t}{c}\left[(a_1+a_2)\dot{\bar{r}}_1 + a_2\dot{\bar{r}}_2\right]$$

Figure 4. Tracking Signal Power Levels and Pointing

gimbaled high-gain antenna is directed to ATS by programmed activation of an X/Y mechanical mount. The antenna is located on the top of the Nimbus spacecraft.

The tracking data recorded at the ground station consists of range and Doppler measurements in terms of time delays. The range data is elapsed radio wave propagation time. The Doppler data, which is a function of range rate, is recorded as the time required to count a fixed number of cycles of two-way Doppler.

Figure 5 illustrates the overall tracking data processing required for this experiment.

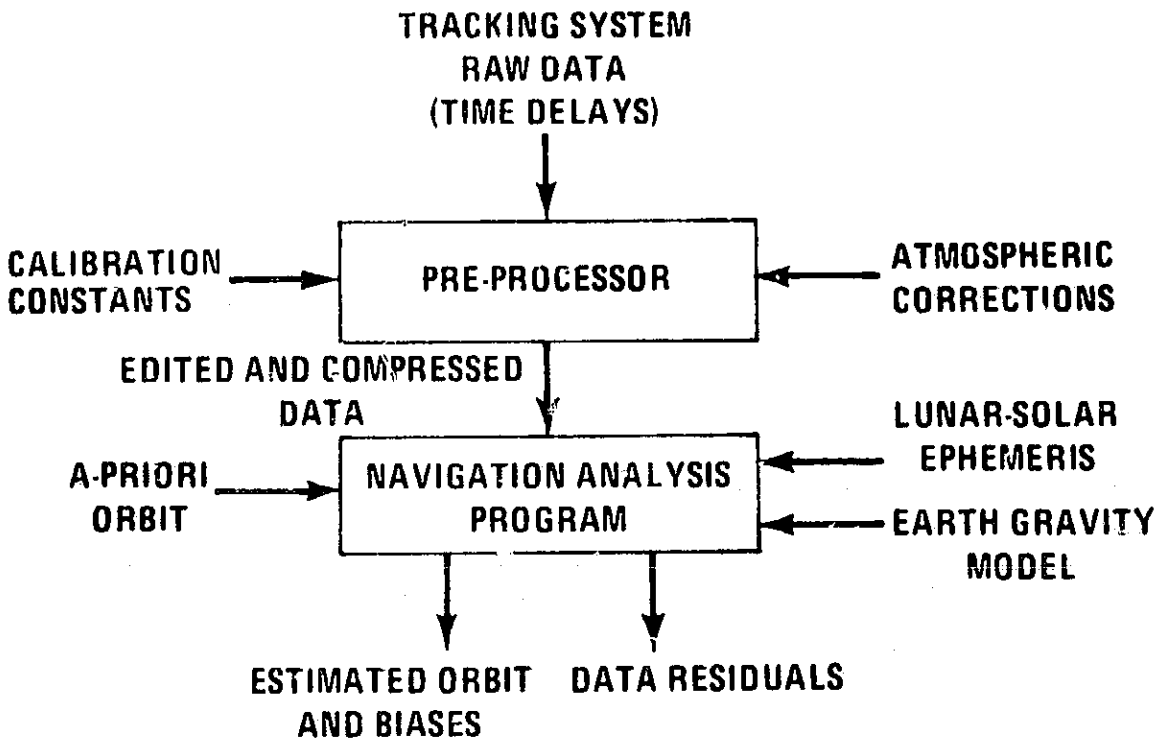

Figure 5. Data Processing for Satellite-to-Satellite Orbit Computation

The overall ranging measurement consists of a measurement of the total round trip signal delay and involves:

- The interrogation station located at Rosman, North Carolina (or currently from the transportable site at Madrid, Spain)
- The phase-locked ATS translation transponder and S-Band parabolic antenna, and
- The Nimbus crystal-controlled transponder used in conjunction with the programmed S-Band helical antenna array (phase-locked transponder for GEOS-3 and Apollo)

The rate of range change ("average range rate") is observed as a Doppler shift and necessarily involves the relative motions of the two spacecraft and the ground station.

The ground station typically will transmit at a 2 kw (CW) level, although it is capable of transmitting up to 10 kw. The highest resolution range

tone is 100KHz with lower ambiguity resolving tones used during acquisition. The tracking signal generated at the ground station and transmitted to ATS is used for the coherent Doppler and tone ranging measurements. The signal generation is indicated in simplified form in Figure 6 (ref. 6). The use of the pilot carrier at 6150 MHz permits a coherent lockup with the ATS transponder, while the tracking signal (6137.85 MHz in the case indicated) can be varied over a wide range to permit coherent tracking of other spacecraft or ground located transponders without reacquiring ATS in the frequency domain. The coherent tracking signal translation by the ATS transponder is indicated in Figure 7.

The Nimbus translation transponder shown in Figure 8 is interrogated by ATS at 2062.85 MHz. The four-element antenna subsystem is directed to ATS by programmed activation of a gimbaled X/Y mechanical mount. The pointing information is normally loaded into the Nimbus memory via VHF radio link when the spacecraft is in view of a Nimbus command site such as the Fairbanks, Alaska, STDN. The antenna can also be controlled by direct access and control via the ATS-6 command relay to Nimbus (S-Band).

With reference to Figure 8 the incoming Doppler-shifted ATS signal is translated by a frequency derived from the Nimbus 37.550 MHz crystal oscillator. This same reference is multiplied up to S-Band (2253.0 MHz) where it serves as the carrier for the Nimbus-to-ATS eight-watt link. The translated ATS-to-Nimbus signal is phase modulated onto the 2253.0 MHz carrier at a nominal modulation index of 1.5 radians. This system is based on the Goddard Range and Range Rate concept, where a crystal-controlled relatively broadband (several hundred KHz) transponder is employed. This system is made equivalent to coherent (i.e., phase-locked transponder) operation by proper ground station processing of the transmitted carrier which is coherent with the onboard reference oscillator. The advantage of using such a transponder is that no frequency swept acquisition is required by the interrogating signal. The frequency excursion at 2 GHz due to one-way Doppler often approaches ±50 KHz, since the linear speed of near-earth spacecraft is typically 8 km per second.

Doppler data is the most accurate form of tracking data available for purposes of orbit computation because one cycle of Doppler is recorded for every half wavelength the spacecraft moves radially relative to the interrogating station.

The group delay of the Nimbus transponder has been carefully calibrated over a wide range of frequency and temperature. Measured group delay repeatability is within ±20 nanoseconds with a nominal delay of 2.6 microseconds. Systematic one-way ranging errors introduced by the Nimbus transponder are thus expected to be less than ±3 meters.

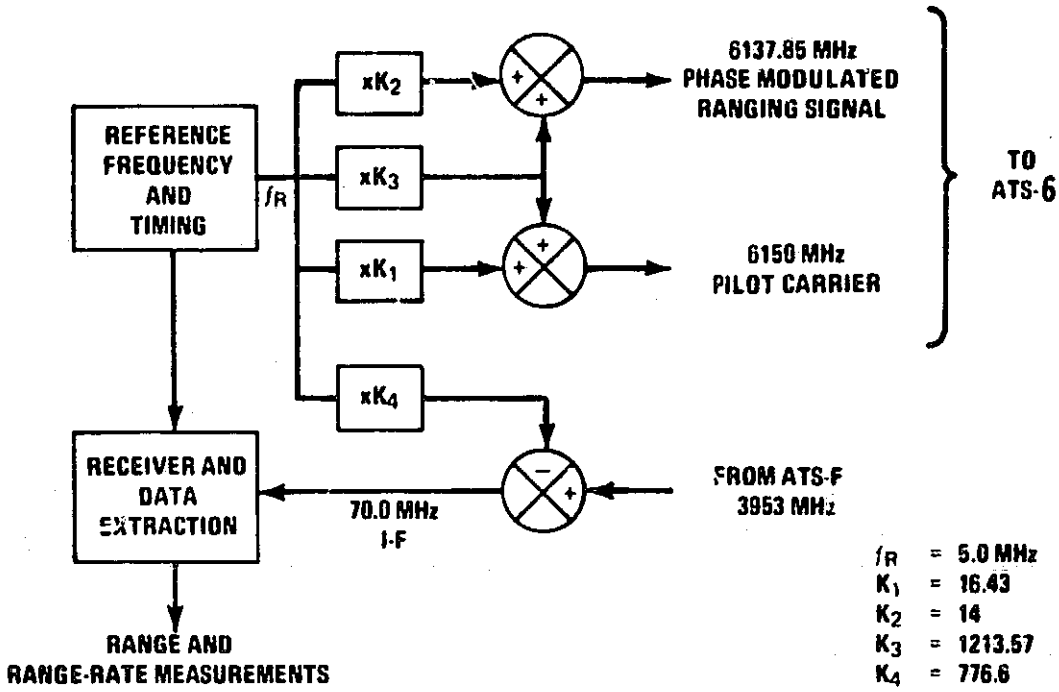

Figure 6. Ground Station Signal Generation to ATS-6

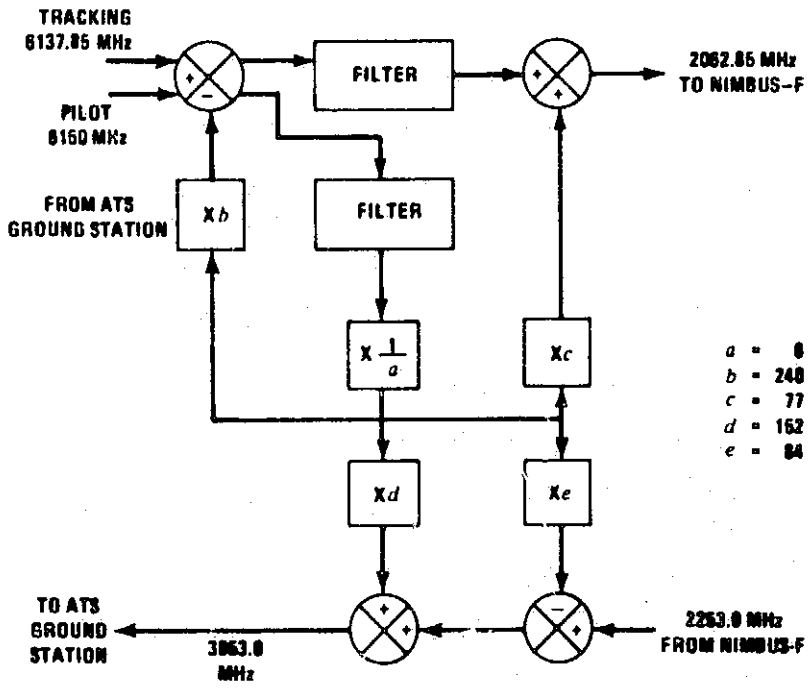

Figure 7. Signal Translation by the ATS-6 Transponder

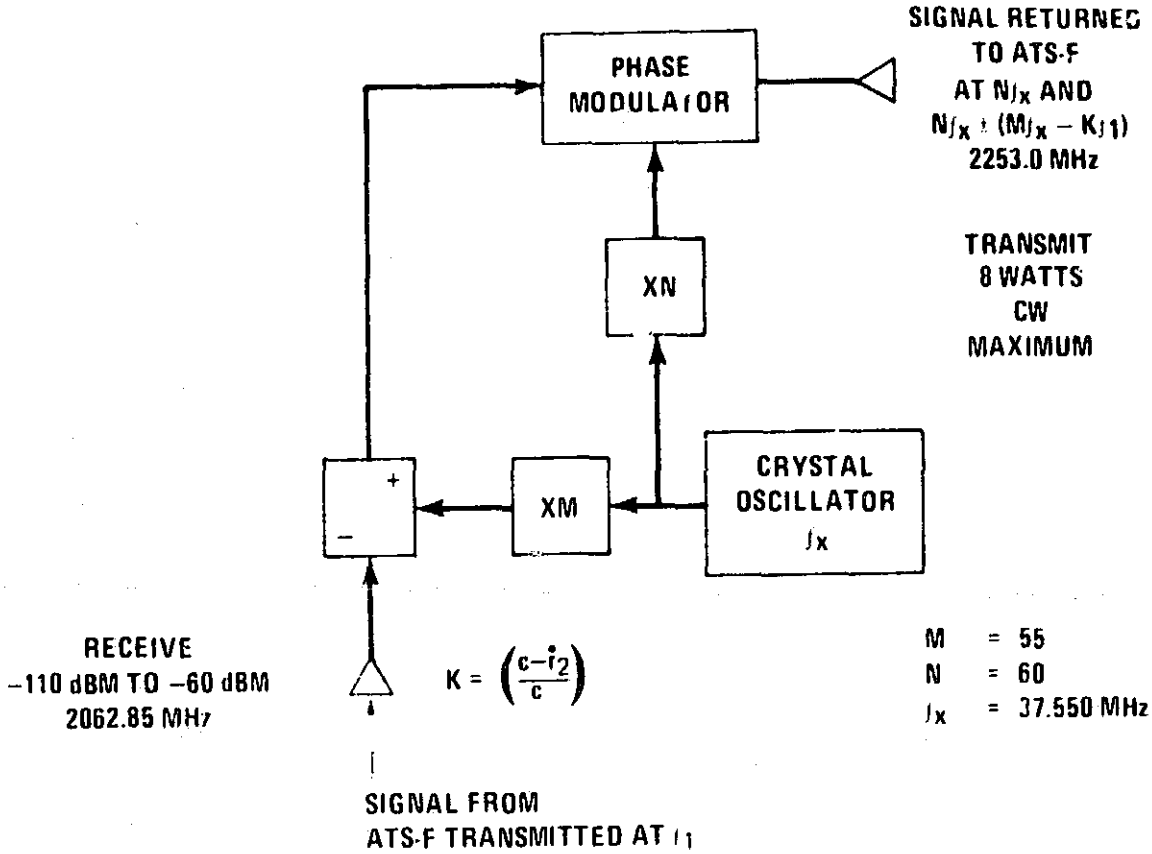

Figure 8. NIMBUS-6 Transponder

- TRACKING MEASUREMENT INTERPRETATION

The "range" measurement is performed by comparing transmitted and received tone zero crossings, the highest resolution tone frequency in this case being 100KHz. The "range rate" measurement is performed by counting a predetermined constant number of Doppler cycles and recording the time required to receive these cycles. Thus, both "range" and "range-rate" are recorded in terms of elapsed time. The raw data actually lists elapsed cycles of a 100 MHz clock; consequently the time readout is quantized to 10 nanoseconds.

The highest resolution ranging tone used in this experiment is 100 KHz. Lower frequency tones are sequentially used during acquisition for ambiguity resolution. The lower tones are at 20 KHz, 4 KHz, 800 Hz, 160 Hz, 32 Hz, and 8 Hz.

The tone ranging measurement is quite straightforward. However, its accuracy depends chiefly on the quality of preflight calibration of both the ATS and Nimbus

transponder group delay. Such preflight calibration data have been taken over a range of frequencies and temperatures. Indications are that with careful calibration the total systematic delay error in the ranging measurement can be held to a few meters of equivalent one-way range.

The electronics for ATS-6 satellite-to-satellite tracking have been so configured that the Doppler output is approximated by the following equation:

$$f_d = \frac{-2 f_t k}{c} \left[a_1 \bar{\dot{r}}_1 + a_2(\bar{\dot{r}}_1 + \bar{\dot{r}}_2)\right] \tag{1}$$

where f_d measured average Doppler frequency

f_t = uplink frequency = 6137.85 MHz

k = 0.336

a_1 and a_2 are scalar constants determined by equipment frequency multiplications

$\bar{\dot{r}}_1$ = average range-rate ATS to ground site

$\bar{\dot{r}}_2$ = average range-rate ATS to Nimbus, Apollo, or GEOS-3

A detailed discussion of Doppler factors in satellite-to-satellite tracking is given in ref. 7. A description of the observations, data formats and system parameters associated with NASA-GSFC satellite-to-satellite tracking is given in ref. 8.

In order to permit range rate direction determination a fixed bias frequency (500 KHz) is added to the observed Doppler at the Doppler extractor. Thus the system counts the time, T_c, required to accumulate N cycles of Doppler, f_d, plus bias, f_b. That is:

$$T_c = \frac{N}{f_b + f_d} \text{ (seconds)} \tag{2}$$

where N is given in Table 1.

Table 1
NIMBUS Doppler Cycle Count

N	Data Sample Rate
31995	8 per second
63990	4 per second
127980	2 per second
255960	1 per second
2559600	6 per minute

The GEOS-3 tracking uses a continuous Doppler count such that an accumulation of Doppler cycles over a count time T is given by:

$$N_2 - N_1 = T(f_b + 100 f_d) \tag{3}$$

and the bias frequency is 2×10^7 Hz. For GEOS-3 the Doppler equation in the form of equation (1) is given by:

$$f_d = 2.247 \times 10^9 \left[-\frac{2}{c}\right] \left[\left(1 + \frac{1.700}{2.247}\right) \dot{r}_1 + \dot{r}_2\right] \tag{4}$$

Here the scalars 2.247 and 1.700 are exact and c is the speed of light.

- ATMOSPHERIC EFFECTS

The range and Doppler measurements will also be biased by the Earth's troposphere and ionosphere. Measurement biases of meters in range and tens of cm/sec in range rate can be expected at 2GHz. Atmospheric refraction effects can to a large extent be modeled out. Some of the work done in this area at NASA-GSFC is indicated in references 9, 10, and 11.

The atmospheric range bias is frequency independent through the troposphere and inversely proportional to frequency squared through the ionosphere. The range rate bias, in addition to the foregoing, is proportional to the rate of scan through the atmosphere as well as to the magnitude of horizontal gradients.

- ORBIT DETERMINATION

In the actual orbit determination program (NASA-GSFC Navigation Analysis Program) the four radio propagation paths are considered separately and the final orbit solution arrived at iteratively. This analysis program is a generalized least squares parameter estimation program designed to accept and process numerous types of tracking observations, and includes algorithms for rigorous treatment of single or multi-satellite time delay and delay rate measurements. The geopotential model can be selected from any of a number of available gravity field models. One such field currently used in this program is the Goddard Earth Model-2 (GEM-2) which is given in terms of spherical harmonics up to order and degree 22. Lunar and solar perturbations are provided by means of the JPL ephemeris residing on permanent disk file at the NASA-GSFC IBM 360/95 computer facility.

Studies have shown (ref. 12 & 13) that Earth gravitational anomalies should be observable in near Earth satellite-to-satellite Doppler data. Preliminary analysis of ATS-6/Apollo-Soyuz data bears out the conclusions of these early studies (ref. 14).

2.2 NIMBUS-6 ONE WAY DOPPLER TRACKING

One way Doppler measurements are being made aboard NIMBUS-6 in conjunction with the satellite balloon and buoy tracking and meteorological experiment entitled "The Tropical Wind Energy Conversion and Reference Level Experiment (TWERLE). On the daylight portion of each orbit, when the NIMBUS is within range of the meteorological balloons (several hundred up at present) the Random Access Measurement System (RAMS), which is the space-borne segment of TWERLE, detects, demodulates and stores the one way Doppler shifted signal and sensor data transmitted by each platform (ref. 15). The power level of the beacon is on the order of 600 milliwatts at a nominal carrier frequency, f_0, of 401.2MHz. The expected uncertainty in this frequency is ± 5kHz and the maximum one way Doppler shift at NIMBUS as calculated from $-\dot{r}/c\ f_0$ is ± 10kHz. The onboard double conversion receiver derives successive translation frequencies of 345.6MHz and 55.575MHz from the NIMBUS 1.6MHz clock and consequently operates at a nominal intermediate frequency (IF) of 25kHz. The IF operating range is from 10 to 40kHz (ref. 16). Figure 9 indicates the principle of operation of the RAMS system. The NIMBUS operational orbit is computed by the NASA tracking network and the ephemeris (X, Y, Z and $\dot{X}$, $\dot{Y}$, $\dot{Z}$) is used as computational input at the ground based computing center. Frequency offset (i.e. departure from nominal 401.2MHz Doppler) is solved for along with the beacon position coordinates S_1 S_2 S_3. Position can be determined in a single

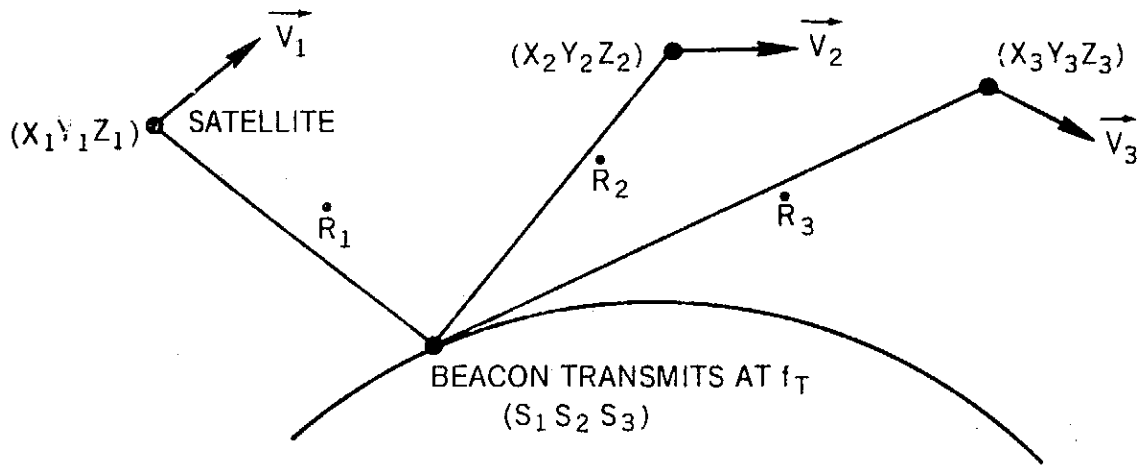

$$R^2 = (X-S_1)^2 + (Y-S_2)^2 + (Z-S_3)^2$$

$$\dot{R} = \frac{\partial R}{\partial X}\dot{X} + \frac{\partial R}{\partial Y}\dot{Y} + \frac{\partial R}{\partial Z}\dot{Z} = \frac{(X-S_1)}{R}\dot{X} + \frac{(Y-S_2)}{R}\dot{Y} + \frac{(Z-S_3)}{R}\dot{Z}$$

$$\text{DOPPLER SHIFT AT SATELLITE} = -\frac{\dot{R}}{C} f_T$$

NOTE: GEOCENTRIC CARTESIAN
EARTH FIXED COORDINATES.
$C = 2.997925 \times 10^8$ METERS/SEC

Figure 9. One Way Doppler Location of Beacon

satellite pass. Balloon velocity is estimated from two successive passes (ref. 17). The software developed for satellite-to-satellite orbit computation (i.e. Navigation Analysis Program) has also been applied to the solution of the one way beacon problem and consistently recovers such parameters as frequency offset, timing bias and beacon location. The fixed reference platform used in experimenting with this data type (apart from the normal TWERLE Balloon operations) is located at the NASA Fairbanks, Alaska tracking station.

3.0 EXPERIMENTAL RESULTS

The following presents some recent results in the areas of satellite-to-satellite tracking, geostationary satellite trilateration and one way Doppler Earth fixed beacon location from a near Earth satellite.

3.1 SATELLITE-TO-SATELLITE ORBITS

The geostationary ATS-6 spacecraft launched on 30 May 1974 has been the relay satellite for all NASA satellite-to-satellite tracking to date involving GEOS-3 (launched 9 April 1975), Apollo-Soyuz (15 July - 24 July 1975), and NIMBUS-6 (launched 12 June 1975).

The expected error for the NASA range and range rate satellite-to-satellite tracking system is a function of many controlled parameters such as range tone frequency, sample rate, bandwidth settings, signal-to-noise spectral density ratios, spacecraft dynamics and so on (ref. 6). However the system is generally used with what might be termed a standard set of options such as; 100kHz maximum range tone frequency, signal levels such that system is not thermal noise limited, 1 per second or 6 per minute data rate, and a 25Hz range tracking loop two-sided noise bandwidth. Table 2 lists the theoretical system performance for the foregoing selected options. Doppler averaging time is approximately one half the sample time interval for NIMBUS tracking and equal to the sample interval for Apollo and GEOS tracking.

For averaging times, T, up to about 10 seconds the noise decreases as 1/T. The principal Doppler noise contribution comes from receiver voltage controlled crystal oscillators and the analog to digital conversion. For longer integration times the Doppler noise is also influenced by noise falling off as $1/\sqrt{T}$ (Fig. 10). This effect is attributed to the phase jitter in the transmitter reference signal used at the Doppler extractor. It should be pointed out that the least significant range bit recorded is 1.5 meters which is consistent with the best expected one way performance of 1.7 meters resolution.

Table 2 indicates the predicted satellite-to-satellite tracking system measurement resolution.

Table 2
Tracking System Measurement Resolution

Range (Meters)		Range Rate (Cm/Sec)	
Systematic	Random	Systematic	Random
1.2	1.2	Negligible	0.03
		NOTE: 10 Sec. Averaging	

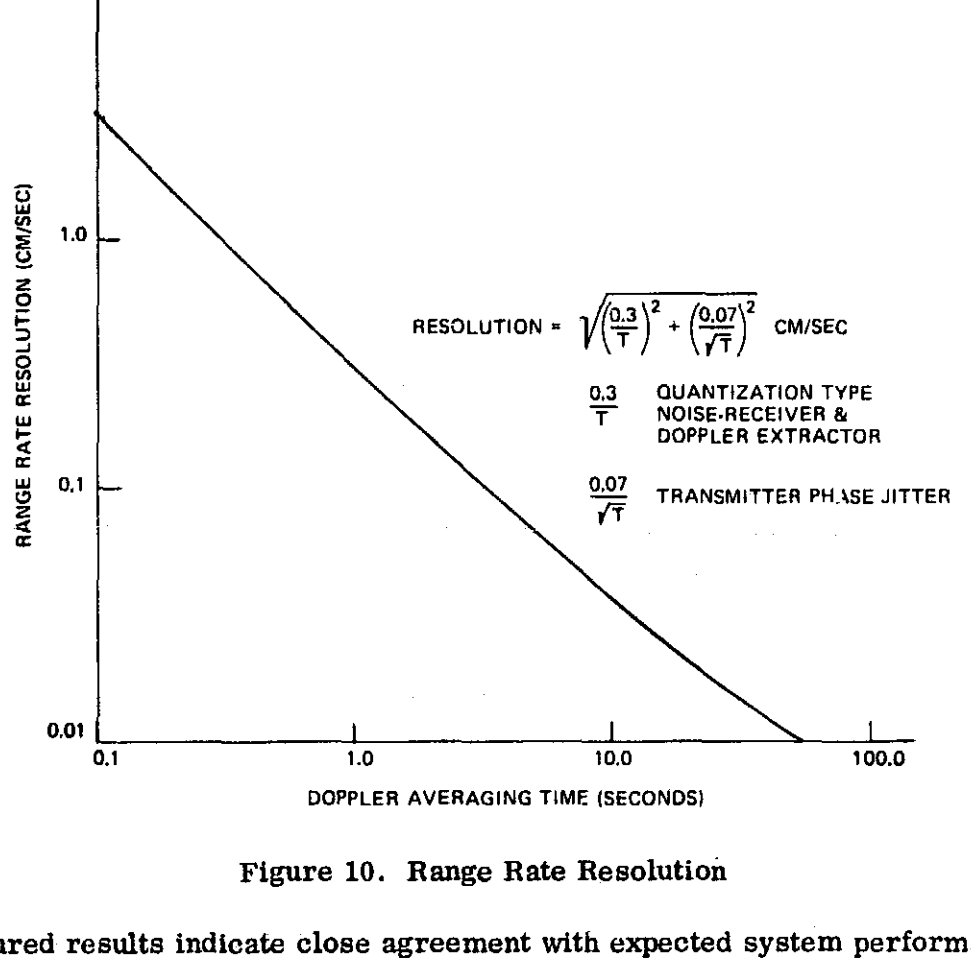

Figure 10. Range Rate Resolution

Measured results indicate close agreement with expected system performance. System random errors or "noise" are generally observed by the least squares fitting of short data spans (i.e. 1 to 10 minutes) with polynomials of at least 5th degree to account for spacecraft dynamics. Care must be taken such that the polynomial itself does not introduce apparent error. (ref. 18). If the data is from a static or collimation tower test a least squares straight line fit is appropriate.

Once an orbit is computed one indication of valid results is the difference between observed and calculated parameters over the data span. Such differences are often referred to as "orbit residuals". When the data is compared with the calculated orbit over one or more revolutions the results will be indicative of uncertainty in modeled parameters such as imperfect gravitational field harmonics and so on. It is clear that in order to improve such modeling through orbit solutions the basic orbit determination uncertainty introduced by tracking system errors must be less than the perturbation being solved for. Another

test of validity is the independent determination of two or more orbits of a given spacecraft for the same time span epoch and differencing the position and velocity components. Differencing independently determined orbits for a given spacecraft over the same time span is often referred to as "orbit overlap analysis" (ref. 19).

If independent tracking data sets are used to overlap the same orbit interval over which the overlap comparison is made the differences generally reflect tracking system performance, tracking geometry, data quantity, station location uncertainty and computational accuracy. However if one orbit is computed from a given data set and then predicted or "propagated" several days or more to overlap an orbit computed with a new data set, the orbit errors will be primarily due to uncertainties in gravitational field modeling. Orbit determination errors can thus be assessed either near the time of data observation or after orbit propagation.

Finally, another measure of accuracy is the closeness of recovery of the same parameter or orbit using two or more independent means of comparison such as; ground tracking by lasers versus satellite-to-satellite tracking, or using different orbit computation programs to recover the same parameter and so on. Again the differences in results provide some measure of accuracy. One must be careful in interpreting such results since such comparisons usually imply one tracking system and/or computer program can be referred to as a "standard".

- ATS-6/GEOS-3 ORBIT DETERMINATION

Satellite-to-satellite tracking and trajectory computation analysis has been underway for approximately 6 months. ATS-6/GEOS-3 tracking provided the first example of this new data type. Preliminary indications are that the accuracy of the a priori position used for the geostationary satellite (ATS-6 in this case) is a very critical factor in achieving orbit solution convergence. The most effective procedure for two-way satellite-to-satellite orbit determination appears to be as follows:

(A) acquire satellite-to-satellite range sum and range sum rate data over several successive low satellite passes

(B) obtain a reasonably accurate (i.e. position within several hundred meters) geostationary orbit by means of, for example, trilateration tracking

(C) obtain an approximate near Earth satellite a priori vector based on operational predictions

(D) solve for both geostationary and near Earth satellites simultaneously.

In this manner a 34 hour arc starting May 2 - 2300 Hours UT and ending May 4 - 0900 Hours UT consisting of ten passes of range sum and range rate sum satellite-to-satellite tracking data was processed to estimate the GEOS-3 orbit, the ATS-6 orbit, range data bias and solar radiation coefficients for each satellite. A priori estimates of each satellite epoch states were obtained from ground based tracking. Data rates were 6 per minute. The GEM-1 geopotential field was selected for this particular solution since this field has been most widely distributed to the user community. Orbit propagation studies are also currently being pursued using ATS-6/GEOS-3 satellite-to-satellite data in conjunction with evaluation of the GEM-1 through GEM-8 geopotential fields. The a posteriori residuals of the fit were 1.3mm/sec R.M.S. for range rate sum residuals and 16 meters for range sum residuals (Fig. 11 & 12). The optimal weights for a priori estimates of states have not yet been determined. A solution when the ATS-6 satellite state is totally constrained yields larger residuals than the solution above. An unconstrained solution fails to converge. Preliminary overlap tests indicate that satellite-to-satellite tracking can produce orbits comparable to that derived from ground based tracking (ref. 19). For example the 34 hour arc just described was used to produce two GEOS-3 orbits which were then overlapped. One orbit was computed from the first 24 hour data span and the second based on the last 24 hour span 2nd the overlap consisted of 12 hours. Comparison of the two GEOS-3 orbit vectors thus generated resulted in a minimum position difference of 10 meters and a maximum difference of 30 meters.

These orbital differences represent the very first result of overlap as applied to satellite-to-satellite tracking. Each of the two overlapped orbits was derived from data acquired during only three GEOS-3 revolutions.

- ATS-6/APOLLO-SOYUZ ORBIT DETERMINATION

The possibility of using high resolution satellite-to-satellite Doppler data in a short arc orbit computation to detect gravitational anomalies led to the Apollo-Soyuz Geodynamics Experiment (ref. 14). The purpose of this experiment was to demonstrate the feasibility of detecting and recovering high frequency components of the Earth's gravity field by observing Doppler data from the near Earth (200KM altitude) Apollo satellite via the geostationary ATS-6 satellite.

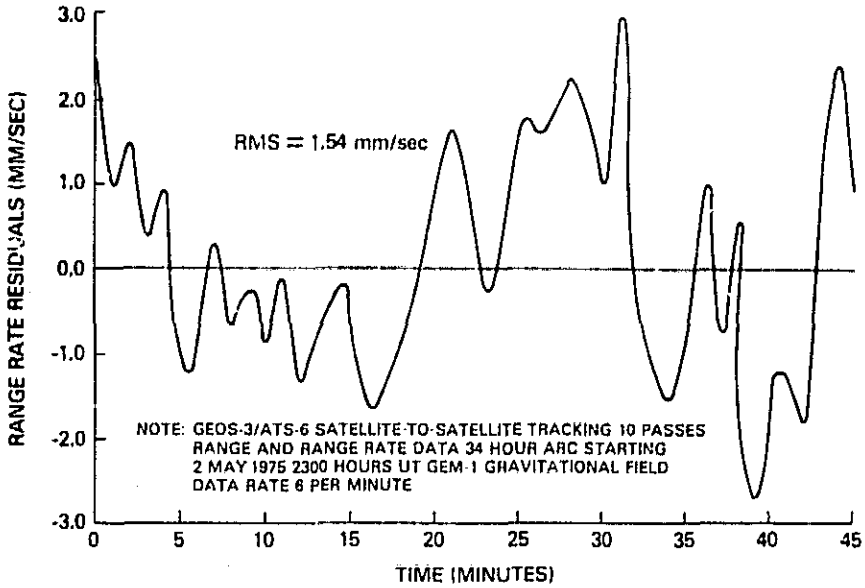

Figure 11. Typical GEOS-3 Per Pass Orbit Residuals

RMS OBSERVED MINUS CALCULATED

PASS NUMBER	RANGE-RATE (MM/SEC)	RANGE (METERS)
1	1.4	–
2	1.3	–
3	*	13.7
4	1.8	–
5	1.5	16.5
6	*	16.5
7	1.1	–
8	0.4	–
9	*	16.8
10	1.3	19.0

NOTE: 34 HOUR ARC STARTING AT 2300 HOURS UT 2 MAY 1975
ATS-6/GEOS-3 SATELLITE-TO-SATELLITE TRACKING
* DOPPLER INVALID
– NO RANGING PERFORMED

Figure 12. GEOS-3 Residual Summary

Detectability has been demonstrated through an analysis of the residual patterns in the satellite-to-satellite tracking data and comparing these patterns with previously predicted signatures due to perturbations of gravity anomalies. The recoverability objective involves the actual estimation of the magnitude of these anomalies.

The prime area of experiment data collection was the Indian Ocean Depression centered at 5° N. Latitude and 75° E Longitude. The experiment data collection phase was very successful. All data were obtained for the originally requested 28 experiment revolutions. In addition, data were collected on 79 unscheduled revolutions.

Preliminary results show that the detectability objective of the experiment has been demonstrated in the Indian Ocean Depression (Figure 13) area as well as over several other anomalous areas. Further analysis is required to demonstrate the possibility of actual recovery or estimation of the magnitude and distribution of the anomalies.

It should be pointed out that because of the short arc - typically 35 minute - orbit solutions used to detect anomalies, the results are essentially "independent" of the particular spherical harmonic gravity field used. The GEM-1 field was used during the analysis which produced Figure 13.

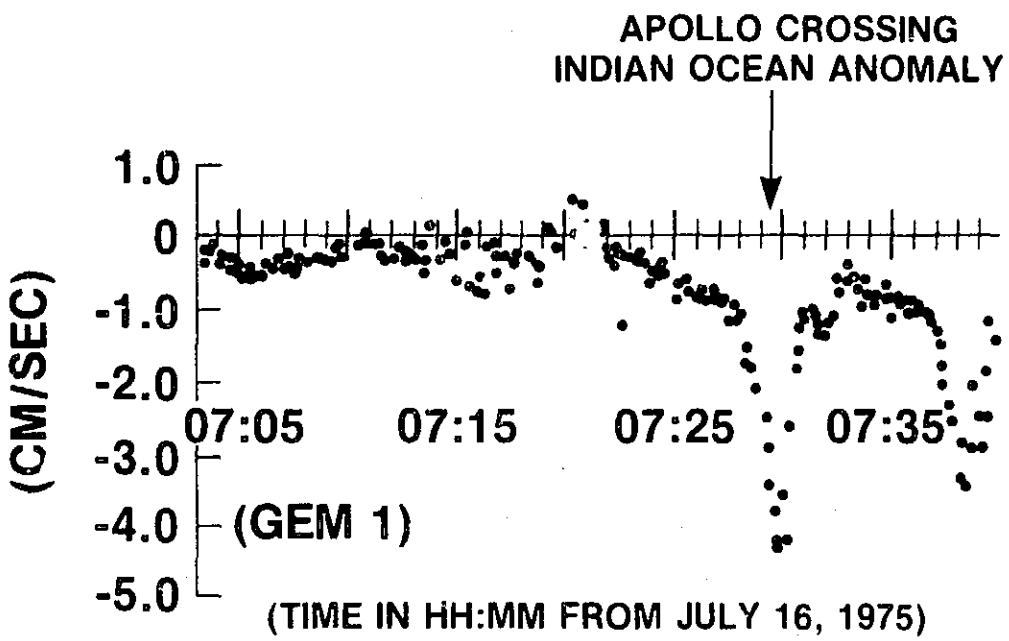

Figure 13. Apollo/ATS-6 Satellite-to-Satellite Range Rate Residual

3.2 ATS-6 TRILATERATION ORBITS

Experience to date indicates that well converged satellite-to-satellite orbit determination requires an a priori geostationary satellite position to an accuracy of a few hundred meters. This might be achieved by means of three or more widely spaced tracking stations. However a much more efficient means for accurate geostationary orbit computation has been established wherein a single station sequentially interrogates a number of widely deployed transponder via the geostationary satellite. The same station then records the tracking data in exactly the same manner as during satellite-to-satellite tracking. Weekly trilateration tracking of ATS-6 is now being performed in support of the satellite-to-satellite tracking involving GEOS-3 and NIMBUS-6. The following ATS-6 trilateration tracking test was conducted during the checkout phase of the satellite-to-satellite tracking system.

Geostationary Satellite Trilateration

On 4 November 1974 a 24 hour ATS-6 trilateration tracking test (Fig. 3) was run using the tracking stations at Rosman N. C. and Mojave, California. The availability of essentially 2 separate data sets (Mojave and Rosman) covering the same 24 hour period made this test extremely valuable in assessing orbit computation accuracy since the prime transmit-receive sites (i.e. Rosman & Mojave) could be expected to contribute the major tracking measurement uncertainty. The transponders were located at Rosman, Mojave, NTTF Greenbelt, Maryland and Santiago, Chile. Each data stretch was approximatedly 5 minutes long and the data rate was one sample per 10 seconds. Over the 24 hour period each station sequentially tracked the transponders via ATS-6. Rosman and Mojave tracked over alternate 2 hour periods. The data noise was at the system resolution level (Figure 14). The two position vectors calculated from the Mojave and Rosman data sets were overlapped and were in agreement to within 20 meters at the center of the data span (Figure 15). It is reasonable that the center of the span should represent maximum accuracy since this point in time is bracketed by equal quantities of data providing maximum information regarding higher order time derivatives of position. As a matter of interest the effectiveness of the ATS-6 solar pressure modeling is indicated in Figure 16.

3.3 NIMBUS-6 DOPPLER BIAS RECOVERY

A one way Doppler satellite-to-satellite system clearly would be much simpler to implement that the two way system described in this paper. The primary disadvantage of the one way Doppler system is that the near Earth satellite

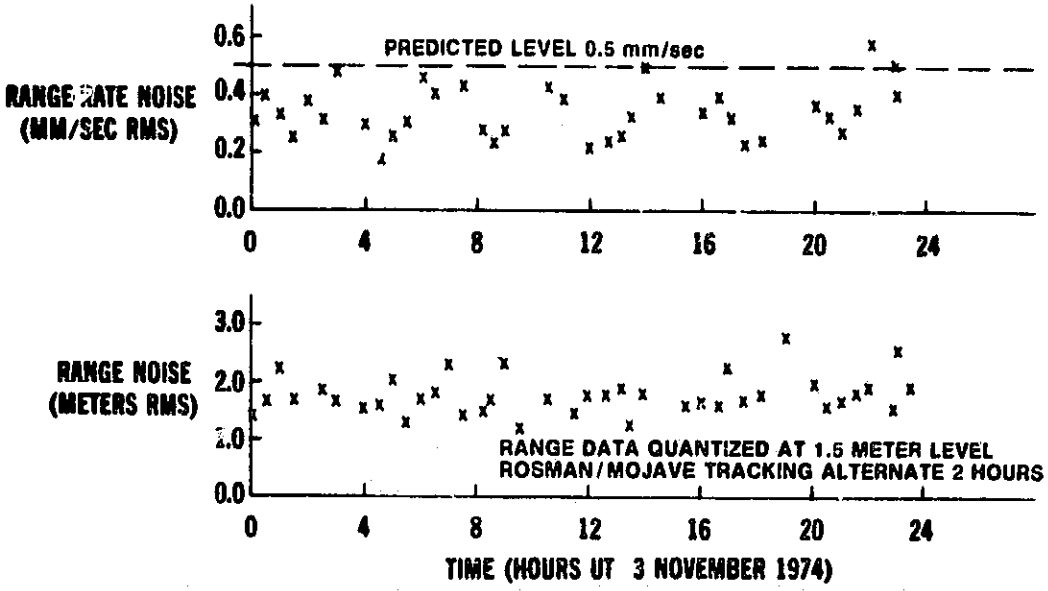

Figure 14. Tracking System Noise

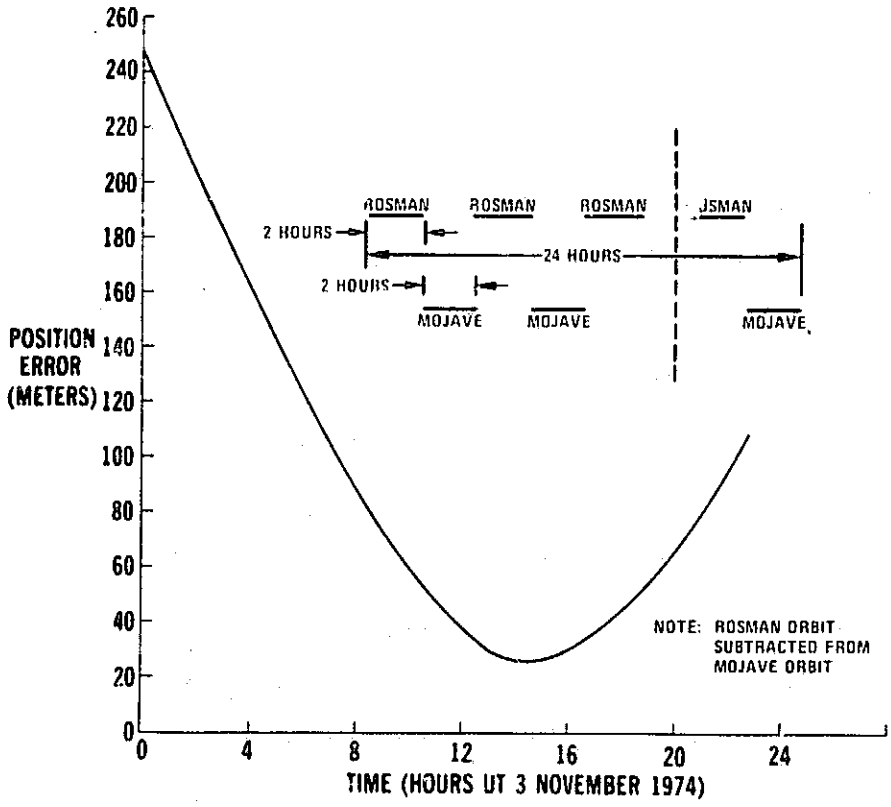

Figure 15. ATS-6 Total Position Error

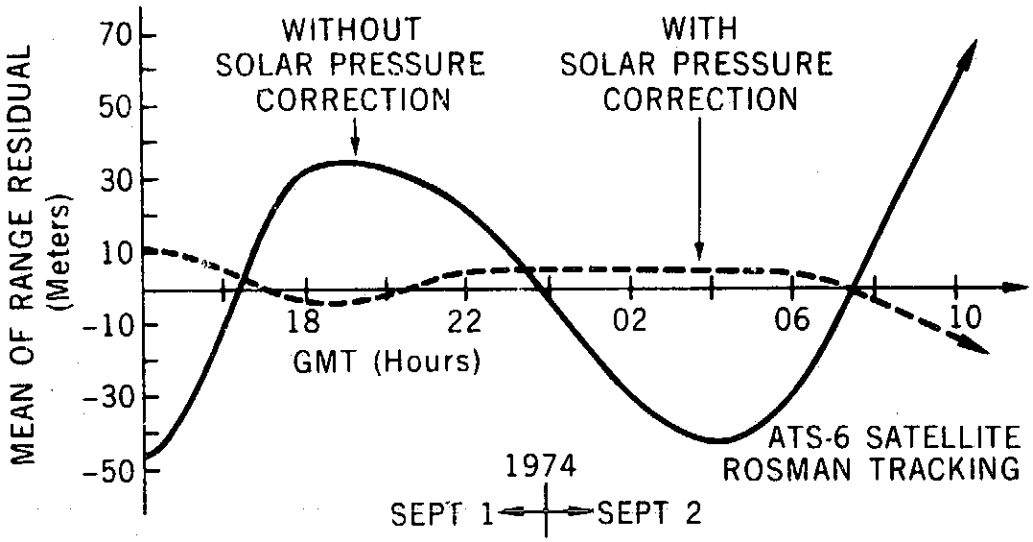

Figure 16. Effect of Solar Pressure on Geostationary Orbits

transmission frequency must somehow be accurately determined without direct measurement. Once the offset from nominal frequency has been determined one way Doppler satellite-to-satellite orbit solutions are possible. In all one way Doppler tracking systems used for position determination it is necessary to determine this offset between the nominal and actual transmitting frequency. The one way Doppler as recorded aboard NIMBUS-6 at 401.2 MHz has permitted an assessment of how well this frequency offset can be recovered in a single 15 minute data pass.

The NIMBUS-6 one way Doppler beacon location capability is being investigated in terms of Search and Rescue Applications. Single satellite passes over the Fairbanks, Alaska station are being analyzed. One question of interest is the recoverability of the frequency bias introduced by uncertainty in the ground beacon and spacecraft translation oscillators. Figure 17 indicates a typical Doppler pass. Figure 18 suggests that a frequency bias is quite observable in that one test using four distinct methods of calculation resulted in agreement to within 0.4Hz for a system with an expected measurement accuracy of ± 1Hz (ref. 16). The NIMBUS project calculation uses the algorithm described in ref. 17. The GTDS program is the principal NASA-GSFC operational orbit computation program. The NAP program is used primarily for orbital analysis. The geometric solution consisted of programming the observational equation indicated in Figure 9 and solving for the frequency offset along with the unknown position S_1 S_2 S_3. All four cases used the same unadjusted NIMBUS-6 ephemeris which had been computed independently.

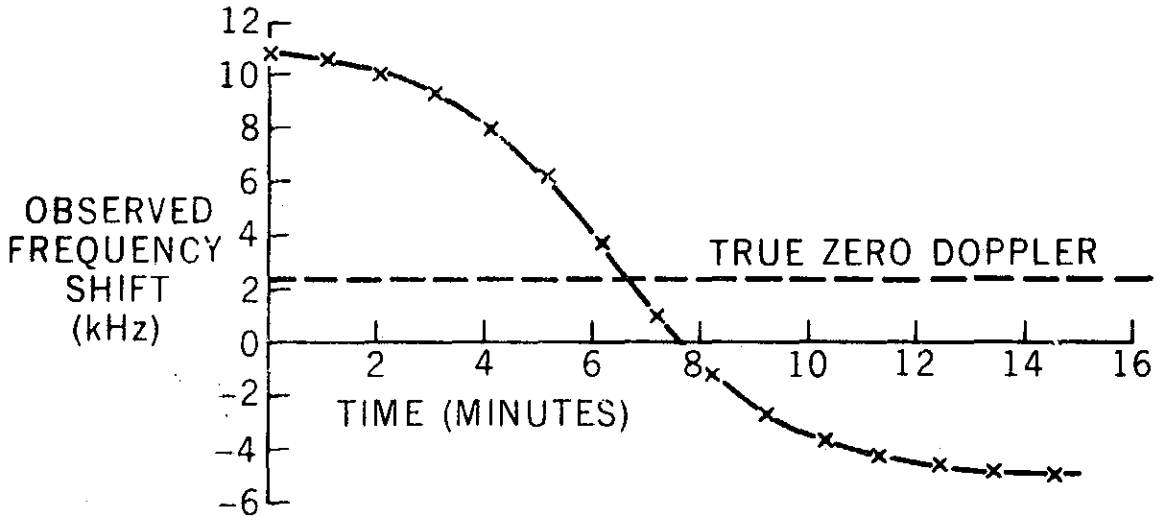

NOTE: FAIRBANKS STATION TO NIMBUS-6
f_0 = 401.2 MHz
START TIME 10 AUGUST 1975
21 H 12 M 31.44 S

Figure 17. Typical One Way Doppler Measurement

- **FAIRBANKS ALASKA BEACON**
- **NOMINAL 401.2 MHz**
- **NIMBUS-6 RECEIVER**
- **SINGLE PASS RECOVERY**

NIMBUS PROJECT	**3098.5 Hz**
GTDS PROGRAM	**3098.7**
NAP PROGRAM	**3098.7**
GEOMETRIC	**3098.3**

Figure 18. One Way Doppler Bias Recovery

4.0 CONCLUSIONS

Satellite-to-satellite tracking system measurement resolution is predictable and readily verified. The resolution of the system described in this paper is 0.05 cm/sec in range rate and 2 meters in range.

A long arc (34 hour) GEOS-3 satellite-to-satellite derived orbit displayed RMS observed minus calculated values of 0.13 cm/sec in range rate and 16 meters in range. Over the same arc the GEOS-3 orbit position differences as obtained from a 12 hour 3 pass overlap computation are 30 meters or less.

The Apollo-Soyuz Geodynamics Experiment demonstrated that short arc satellite-to-satellite orbit solutions readily detect gravity anomalies. The Indian Ocean anomaly Doppler signature (observed minus orbit calculation) was at the expected level of 5 cm/sec.

Experience to date indicates that successful satellite-to-satellite orbit determination is to a large extent dependent on the accuracy of the a priori geostationary orbit. Trilateration geostationary satellite tracking to consistently reduce ATS-6 position errors to less than a few hundred meters is being performed regularily in support of all ATS-6/GEOS-3 and ATS-6/NIMBUS-6 satellite-to-satellite tracking currently being performed.

REFERENCES

1. Data Evaluation Branch, "Apollo 14 MSFN Metric Tracking Performance Final Report", NASA-GSFC X-832-71-175, May 1971.

2. Vonbun, F. O. and J. T. Mengel, "Tracking and Communications for Planetary Manned Mission", J. Spacecraft, Vol. 5, No. 7, pp. 863-865, July 1968.

3. Vonbun, F. O., "The ATS-F/NIMBUS-E Tracking Experiment", pp. 112-120, "Rotation of the Earth", P. Melchior & S. Yumi (eds), D. Reidel Publishing Co., Dordrecht, Holland, 1972.

4. Schmid, P. E. and F. O. Vonbun, "The ATS-F/NIMBUS-F Tracking and Orbit Determination Experiment" 1974 IEEE INTERCON, New York City.

5. Schmid, P. E. and J. J. Lynn, "Results of the 3 November 1974 Applications Technology Satellite-6 (ATS-6) Trilateration Test", NASA/GSFC X-932-75-104, April 1975.

6. Jones, C. E., ATSR Receiver Modification, Report Number R-71-033, General Dynamics, Electro Dynamic Division, San Diego, California, September 1971.

7. Marini, J. W., "Doppler Factors in Satellite-to-Satellite Tracking", NASA-GSFC X-932-74-93, April 1974.

8. Bryan, J. W., J. . Lynn and A. O. Hinely, "A User's Guide for Satellite-to-Satellite System Observations and Data Formats", NASA-GSFC X-932-75-78, March 1975.

9. Schmid, P. E., R. B. Bent, S. K. Llewellyn, G. Nesterczuk, and S. Rangaswamy, "NASA-GSFC Ionospheric Corrections to Satellite Tracking Data", NASA-GSFC X-591-73-281, December 1973.

10. Marini, J. W., "Correction of Satellite Tracking Data for an Arbitrary Tropospheric Profile", Radio-Science Volume 7, Number 2 pages 223-231, February 1972.

11. Marini, J. W., "Tropospheric Range-Rate Tracking Data Correction", NASA-GSFC X-551-72-277, August 1972.

12. Vonbun, F. O., "Geodetic Satellite Mission and GEOS-C Spacecraft", pp. 457-467, Space Research XI, Akademie-Verlag Berlin, 1971.

13. Vonbun, F. O., "Earth and Ocean Physics Applications Program", pp. 239-245, "Astronautical Research 1972", L. G. Napolitano et al (eds) D. Reidel Publishing Co. Dordrecht-Holland, 1973.

14. Vonbun, F. O., W. D. Kahn, J. W. Bryan, P. E. Schmid, W. T. Wells and T. D. Conrad, "Gravity Anomaly Detection from ATS-6/Apollo-Soyuz", 1975 Fall Annual AGU Meeting (also to be published) December 1975.

15. Cote, C. and P. Julian, "The Tropical Wind Energy Conversion and Reference Level Experiment (TWERLE)" as presented in "The NIMBUS-6 User's Guide" NASA-GSFC February 1975.

16. Texas Instruments, Inc., Equipment Group Hb103-Eg73, "Random Access Measurement System (RAMS)", Instruction and Maintenance Manual, Under NASA Contract NAS5-21702, 15 May 1974.

17. T. Green, "Satellite Doppler Data Processing for Platform Navigation", p. 28-38 IEEE Transactions on Geoscience Electronics Vol. GE-13, Number 1, January 1975.

18. Grenchik, T. J., and C. W. Murray, Jr., "Smoothing of Functions of Range and Range Rate Measurements from Earth Orbiting Satellites", NASA-GSFC X-551-72-385, October 1972.

19. Vonbun, F. O., "Satellite Trajectory Determination and their Expected Errors OGO-IV, GEOS-1", in "Dynamics of Satellites" (1969) COSPAR Symposium Pragne, Editor B. Morando, Springer-Verlag/Berlin, 1970.