(NASA-CR-147672) SHUTTLE ORBITER S-BAND QUAD ANTENNA SWITCHING EVALUATION (McDonnell-Douglas Technical Services) 70 p HC $4.50 CSCL 22A

N76-22277

Unclas

G3/18 27961

MAY 1976
RECEIVED
NASA STI FACILITY
INPUT BRANCH

MCDONNELL DOUGLAS TECHNICAL SERVICES COMPANY, INC.
HOUSTON ASTRONAUTICS DIVISION
16915 El Camino Real, Suite 220, Houston, Texas 77058

# SHUTTLE ORBITER
# S-BAND QUAD ANTENNA
# SWITCHING EVALUATION

JANUARY 1975

SPACE SHUTTLE ENGINEERING AND OPERATIONS SUPPORT

NAS 9-13970

Task Order No. B0203

Shuttle Tracking and Communication Support

Antenna and Propagation Evaluation

Design Note

1.2-DN-B0203-001

Prepared by: J. F. Lindsey
Senior Engineer

Prepared by: David H. Orr
Associate Engineer

Approved by: for G. L. Hornback
Senior Group Engineer

MCDONNELL DOUGLAS CORPORATION

TABLE OF CONTENTS


| | | Page |
|---|---|---|
| | LIST OF FIGURES | iii |
| | LIST OF TABLES | iv |
| | ACRONYMS | v |
| | SUMMARY | vi |
| I. | INTRODUCTION | 1 |
| II. | BACKGROUND INFORMATION | 2 |
| III. | ATTITUDE AND TRAJECTORY PROFILES | 7 |
| IV. | COMPUTER PROGRAM OPERATION | 11 |
| V. | COMPUTER PROGRAM RESULTS | 19 |
| VI. | CONCLUSIONS | 40 |
| | REFERENCES | 44 |
| | APPENDIX I - SUBPROGRAM SAPT WITHOUT SUBPROGRAMS | 45 |
| | APPENDIX II - SUBPROGRAM SWITCH | 55 |
| | APPENDIX III - SUBPROGRAM TDRSIF | 57 |
| | APPENDIX IV - SUBPROGRAM SWPRNT | 59 |
| | APPENDIX V - RUN DECK FOR SAPT/SWITCH/SWPRNT/TDRSIF | 61 |

## LIST OF FIGURES


| FIGURE | | Page |
|---|---|---|
| 1. | Shuttle Orbiter Body Coordinate System . . . . . | 3 |
| 2. | Functional Diagram for S-Band Quad Antenna Switching . . . . . | 5 |
| 3. | Sample Descriptor Input for SAPT . . . . . | 12 |
| 4. | Typical Run Deck for SAPT Program . . . . . | 14 |
| 5. | Flowchart for SAPT/SWITCH/SWPRNT/TDRSIF . . . . . | 18 |

LIST OF TABLES


| TABLE | | PAGE |
|---|---|---|
| I. | Attitude Activity Summary of Mission 2 | 10 |
| II. | Limits for SUBROUTINE SWITCH | 16 |
| III. | ECI Roll of 0.5° per second simulation | 20 |
| IV. | ECI Pitch of 0.5° per second simulation | 22 |
| V. | ECI Yaw of 0.5° per second simulation | 23 |
| VI. | Thermal Conditioning-Roll 0.5° per second, X-axis ⊥ sun simulation | 24 |
| VII. | Star Tracking 520 simulation | 26 |
| VIII. | Star Tracking 522 simulation | 27 |
| IX. | Star Tracking 530 simulation | 28 |
| X. | Inertial Hold simulation | 29 |
| XI. | Heads down-Earth Pointing simulation | 30 |
| XII. | LVLH simulation | 31 |
| XIII. | ECI Roll of 2° per second simulation | 32 |
| XIV. | Summary of S-Band Quad Antenna Switching Requirements | 38 |
| XV. | Total Switch changes for Mission 2 | 41 |

## ACRONYMS

| | |
|---|---|
| ATL | Advanced Technology Laboratory |
| GET | Ground Elapse Time |
| KSC | Kennedy Space Center |
| LL | Lower Left |
| LR | Lower Right |
| LVLH | Local Vertical/Local Horizontal |
| MDM | Multiplexer/Demultiplexer |
| TDRS | Tracking and Data Relay Satellite |
| TPS | Thermal Protection System |
| UL | Upper Left |
| UR | Upper Right |
| X-POP | X-axis perpendicular to orbit plane |

## SUMMARY

A study has been performed to evaluate automatic switching of the Shuttle Orbiter S-Band Quad Antennas by the Orbiter on-board computers. The study involved the development and use of an extensive computer program to determine antenna switch position states as a function of time for various orbital activities. The selection of the optimum Quad Antenna element at any given time is based on the look angle to the appropriate Tracking and Data Relay Satellite (TDRS). This study shows that a 2.4 second period is required for updating the S-Band Quad Antenna switch state based on a maximum roll rate of 2° per second. The possibility of a variable update period is suggested since the 2° per second attitude rate is seldom encountered and would, for example, dictate approximately 248,000 on-board computer calculations during Reference Mission 2. The average number of antenna switch state changes was found to be in the range of 1300 for Reference Mission 2.

# I. INTRODUCTION

The purpose of this report is to evaluate the antenna switching characteristics of the S-Band Quad Antennas for a typical Shuttle mission. This information is needed in order to assess the required update period(s) for the S-Band Quad Antenna switch from the associated Shuttle Orbiter computer.

Background information is given in Section II in order to explain the operation of the S-Band Quad Antennas, the antenna switch and the associated Shuttle Orbiter computer interfaces. This is followed by Section III which contains a summary of attitude and trajectory profiles of Reference Mission 2 with 3 options. Section IV describes the operation of the ground-based Fortran computer programs used to simulate automatic switching and mission activity, and this is followed by Section V which gives the results of the computer runs which were made at the Johnson Space Center. Finally, in Section VI the results of the computer runs are combined with the trajectory and attitude profiles to evaluate antenna switching characteristics for Reference Mission 2 with a recommendation for the antenna switch update period.

## II. BACKGROUND

The S-Band Quads consist of four separate antennas mounted 90° apart near the surface of the Shuttle Orbiter (See Figure 1a.). The antennas provide communication between the Shuttle Orbiter and the ground either directly or via a synchronous Tracking and Data Relay Satellite (TDRS). In both cases the S-Band Quad Antennas may be switched separately by manual or automatic selection. In the automatic selection mode real-time calculations are performed by Orbiter on-board computers to determine the "optimum" antenna. This selection is based on the antenna coverage and the line-of-sight look angle between the Shuttle Orbiter and appropriate TDRS or ground station. For the purpose of this study each Quad Antenna was assumed to have a preferred pattern in a particular roll quadrant. It should be noted that the performance of each Quad Antenna is specified with the antenna mounted on a minimum ten (10) wavelength diameter ground plane (Reference 1) which is covered by an appropriate thermal protection system (TPS). Each antenna has a +3dB or better gain defined over a 140° x 90° ellipse-shaped beam. The gain is referenced to a circular isotropic level; however, as was pointed out in Reference 2 the specification does not guarantee a perfect isotropic level since the word "perfect" is omitted. This may be corrected by inserting the word "perfect" in the specification or by specifying the antenna efficiency. The antenna patterns for the Quad Antennas mounted on the Shuttle Orbiter will be somewhat different from those on the circular ground plane due to curvature effects, shadowing and antenna axis canting

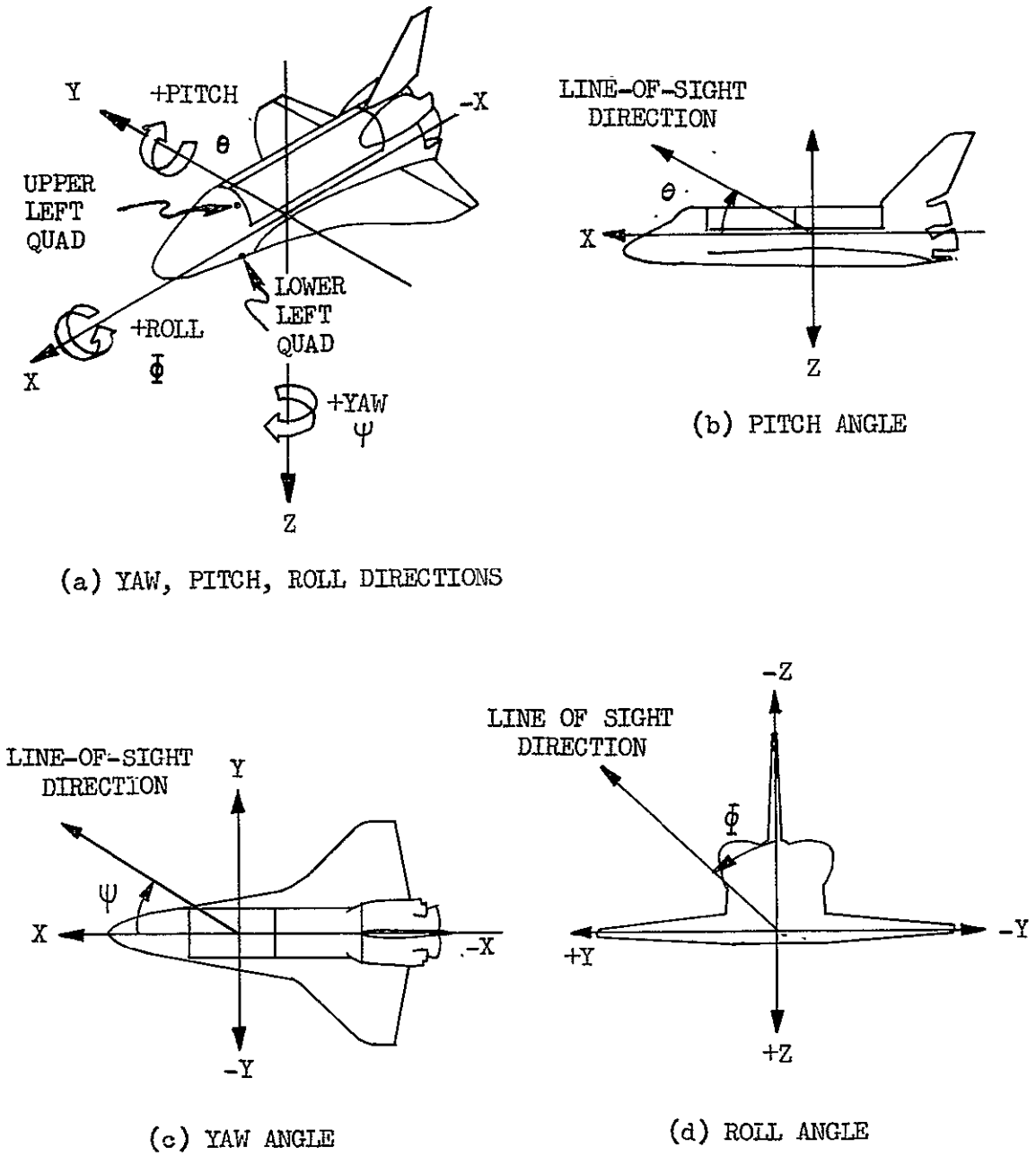


FIGURE 1. SHUTTLE ORBITER BODY COORDINATE SYSTEM

REPRODUCIBILITY OF THE
ORIGINAL PAGE IS POOR

at each Shuttle Orbiter location. Yet, until accurate patterns are made, it is very reasonable to assume that "optimum" coverage is obtained in the appropriate roll quadarant. For example, if the line-of-sight look angle between the Shuttle Orbiter and a TDRS is in the roll quadrant between the +Y and -Z axes the upper right (UR) antenna is selected. For look angles in the -Z/-Y quadrant the upper left is selected, etc. An illustration of the Shuttle Orbiter coordinate system is found in Reference 3 and is redrawn in Figure 1 to define the roll angle ($\Phi$), the pitch angle ($\theta$) and the yaw angle ( $\Psi$ ). The reference points for roll, pitch and yaw are not given in Reference 1; therefore, for the purpose of this report the 0° roll angle is referenced to the -Z axis, the 0° pitch is referenced to the +X axis and the 0° yaw is referenced to +X axis. It should be noted that a unique line-of-sight look angle is defined by specifying any two attitude angles and the sequence. For example, a yaw of 30° and a pitch of 30° would correspond to a line-of-sight look angle in the -Z/+Y roll quadrant and the upper right Quad would be selected.

The selection of the proper antenna is made by an Orbiter computer which controls the antenna switch (Reference 4). A simplified functional diagram is shown in Figure 2 to illustrate the interfaces between the antenna switch and the Orbiter computer. The antenna switch has four input ports two of which are connected directly to Transponder #1 and Transponder #2 in the low power mode. The other two input ports are used for the high power mode with a paramplifier for either a high or low S-Band frequency. The four output ports are connected to

REPRODUCIBILITY OF THE
ORIGINAL PAGE IS POOR



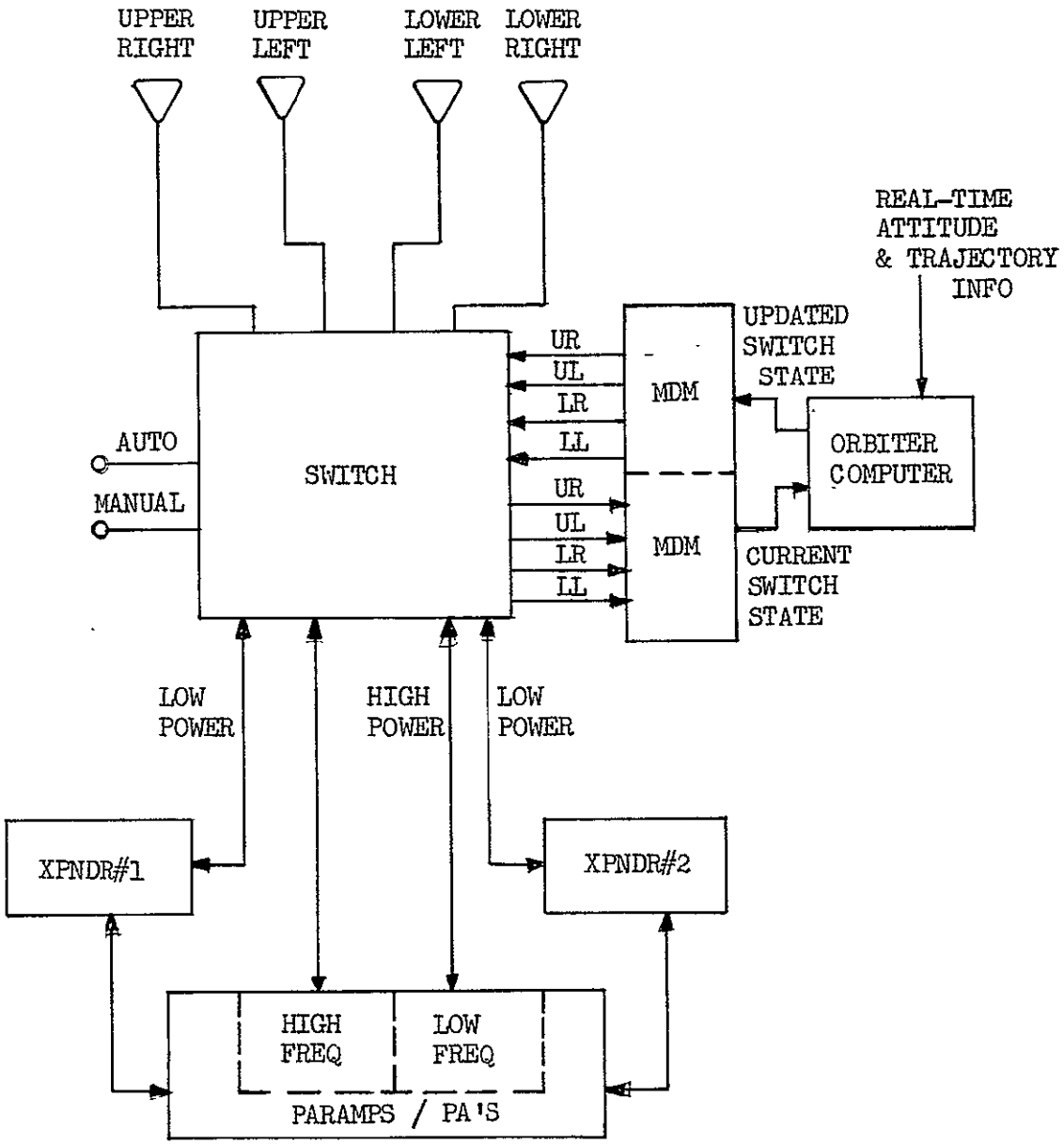


FIGURE 2. S-BAND QUAD ANTENNA SWITCH INTERFACES

individual Quad Antennas. The switch is controlled (Reference 4) so that any one input port and any one output port are connected. In the low power mode, communication is made directly with one of five (5) ground stations and in the high power mode, which is used most of the time, communication is relayed to a ground station via a TDRS. The control of the antenna selection may be manual or automatic via the associated Orbiter computer. The computer interfaces with the switch through the Multiplexer-Demultiplexer (MDM). Signals going to the computer include the present antenna state and the selection of TDRS (high power) or direct ground communication (low power). Also, real-time attitude and trajectory information are inputs to the computer. The signals from the computer to the switch determine the updated antenna switch position (i.e. upper right, upper left, lower right or lower left). The output from the computer may consist of a 2-bit word for determining the four unique positions. The antenna selection is determined by computing the line-of-sight look angle between the Shuttle Orbiter and the appropriate TDRS or ground station. This look angle is then used to determine the "optimum" antenna and an updated signal is sent to the switch through the MDM. The major effort of this study is to assess the required update period for the antenna switch based on Shuttle mission activities.

## III. ATTITUDE AND TRAJECTORY PROFILES

Reference Mission 2 is a seven (7) day combined satellite servicing and sortie mission. It is one of three reference missions designed to illustrate current Shuttle operational functions, techniques, and philosophy. Mission 2 is assumed to have three sortie experiment options each representing a major scientific discipline area to be supported by the Orbiter. These three sortie disciplines are astronomy, earth observation and space processing.

For Reference Mission 2 the Shuttle is assumed to be launched from the Kennedy Space Center (KSC) at 9 a.m. on December 1, 1986. During launch the vehicle rolls at a maximum of 9° per second (Reference 5). After the external tank is jettisoned, the orbital maneuver system insertion burn places the Orbiter into a 100-by-50 nautical mile orbit. A maneuver at the first apogee essentially circularizes the orbit, and rendezvous phasing with the satellite is begun. The rendezvous is completed approximately one day later.

After rendezvous and docking with the satellite, refurbishment operation commences at 26 hours ground elapse time (GET). Refurbishment operations terminate at 46 hours GET at which time servicing equipment is stowed. At 49 hours GET the orbit is adjusted to establish a perigee of 230 n. mi. and then a circularization maneuver is performed at perigee 48 minutes later. At 50 hours GET the Orbiter is oriented to the attitude required for the sortie operations. Sortie operations are performed

during the next 5 days. At 161 hours 30 minutes payload closeout operations begin and preparations for deorbit commence. The deorbit is executed at 164 hours 28 minutes GET with the landing at KSC at 165 hours 32 minutes and 2 seconds GET.

As previously described Mission 2 can be tailored to support a particular scientific discipline by one of three sortie options. Option 1 is a satellite servicing/astronomy mission, Option 2 is a satellite servicing/earth observation mission, and Option 3 is a satellite servicing/space processing mission.

Option 1 consists of astronomy sorties using the 1.5 meter IR telescope. The Orbiter should be stabilized in an inertial attitude with the Orbiter -Z-axis pointed to the target. The Orbiter orientation about the Z-axis is unconstrained; however, the Orbiter X-axis is assumed to be in the orbital plane (X-IOP).

Option 2 consists of various experiments utilizing the Advanced Technology Laboratory (ATL). The best attitude time line for this payload is a heads down local vertical/local horizontal (LVLH) attitude for long periods of time. Such an attitude requires thermal conditioning to meet TPS constraints.

Space processing comprises the Option 3 time line with all experiments located in the sortie lab. The best attitude seems to be an X-POP

(X-axis perpendicular to the orbital plane) LVLH inertial attitude. The X-axis is reversed every eight hours to comply with thermal conditioning constraints.

Mission 2 time lines were studied to determine the amount of time devoted to specific Orbiter attitude activities. The studied activities include holding inertial attitudes, barbecue rolls for thermal conditioning, platform alignments and attitude realignments. Reference Mission 2 time lines for Options 1, 2, and 3 were obtained from a MDTSCO report entitled "Preliminary Baseline Reference Mission 2 Attitude and Pointing Time Lines" (Reference 6). The times of each activity and the percentage of the mission duration are summarized in Table I. This table does not account for launch and landing. The total mission time for Reference Mission 2 is 165 hours 32 minutes and 2 seconds. Launch takes 9 minutes and 57 seconds. The orbiting period which is used in Table I takes 161 hours 20 minutes and 3 seconds. The landing takes 4 hours 2 minutes and 2 seconds.

The worst case angular rate for obital operation is given in Reference 7 as 2° per second. The maximum roll rate is given in Reference 5 as 9° per second for launch and the maximum bank angle rate is given as 5° per second for landing.

| OPTION / ORBITER ACTIVITY | OPTION 1 | OPTION 2 | OPTION 3 |
|---|---|---|---|
| INERTIAL HOLD | 58.2% | 53.8% | 70% |
| SLEEP PERIOD (THERMAL CONDX OR INERTIAL HOLD) | 24.8% | 24.8% | 24.8% |
| ATTITUDE REALIGNMENTS (MANEUVER) | 13.3% | -- | -- |
| PLATFORM ALIGNMENTS (STAR TRACKING) | 1.2% | 1.2% | 1.19% |
| LVLH ATTITUDE HOLD | -- | 14.1% | -- |

TABLE I. ATTITUDE ACTIVITY SUMMARY OF MISSION 2

## IV. COMPUTER PROGRAM OPERATION

This section contains a description of the computer programs used to simulate automatic switching. First, the Shuttle Attitude and Pointing Timeline (SAPT) Processor is discussed. Second, the required additions and modifications are discussed including specially developed Subroutines SWITCH, TDRSIF, and SWPRNT. A simplified flow chart is given to explain the overall functions of each subroutine.

The Shuttle Attitude and Pointing Timeline Processor is a sophisticated computer program which calls up many subprograms. The processor has the capability to input, store and edit summary attitude descriptor data to allow definition and generation of summary attitude and pointing time lines. The inputs consist primarily of a set of descriptor data cards defining the attitude and pointing requirements for the event being considered (i.e., inertial hold, roll rate, pitch rate, etc.). The program requires an input trajectory tape for the mission to be simulated, an ephemeris tape for a time period including the mission dates, and a tape with the SAPT program and its associated subroutines. The SAPT program without the associated subprograms is given in Appendix I.

Input descriptor card information is given in Figure 3. The input format fields are given in Figure 3a and a sample descriptor is given in Figure 3b. The first input card following the XQT (execute) command card must be a data card defining the base date from which

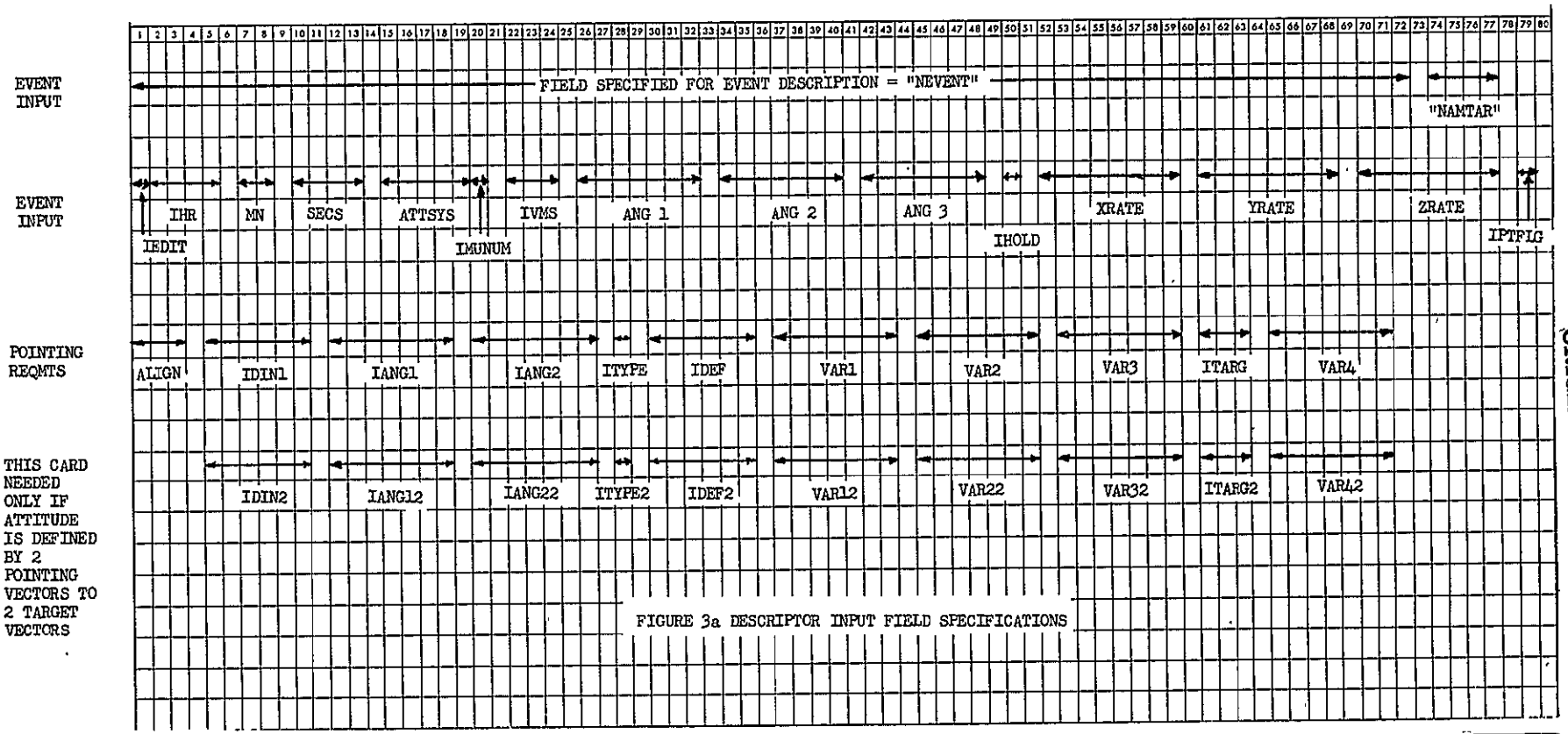


FIGURE 3a DESCRIPTOR INPUT FIELD SPECIFICATIONS

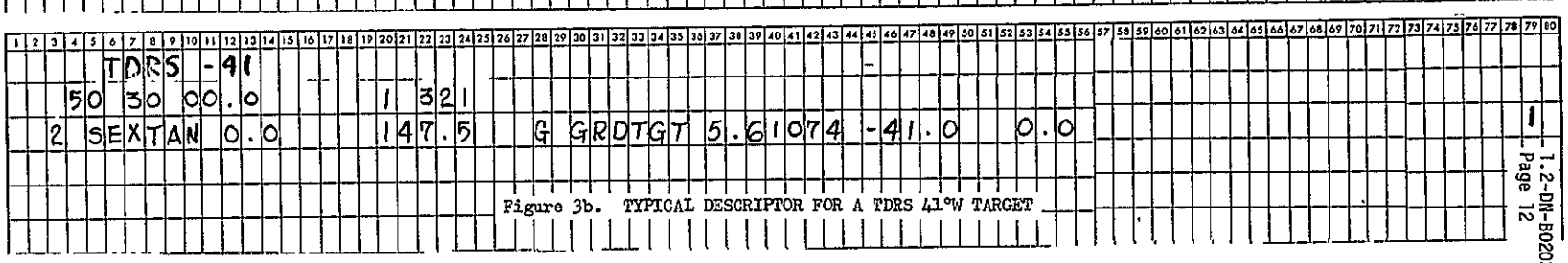


Figure 3b. TYPICAL DESCRIPTOR FOR A TDRS 41°W TARGET

Figure 3. SAMPLE DESCRIPTOR INPUT FOR SAPT

REPRODUCIBILITY OF THE ORIGINAL PAGE IS POOR

to measure GET. This card is required only once per program execution. The attitude and pointing event descriptor cards follow the base data card in a format which might include up to four data cards per descriptor (See Figure 3b.). The first card in the event set is the event name card. Seventy-two characters are allowed to describe the event in an alphameric field format (See Figure 3a.). The second data card contains the attitude requirements. The third and fourth cards are necessary to define target pointing requirements, if any. The event sets are arranged chronologically and treated individually during SAPT execution. Typical events which can be handled by SAPT are target look angle calculations and Shuttle attitude simulations. Celestial, ground and special targets may be specified by reference to a target table included in a SAPT related subroutine or by inputting values to a set of parameters which will locate and define the desired target. As an example of the second target definition method, a TDRS may be specified as an elevated ground target by inputting its longitude, latitude and altitude above the earth's surface as shown in Figure 3b. A typical run deck set up is shown in Figure 4. SAPT has been applied to the problem of calculating look angles (a yaw-pitch sequence) to a TDRS while maintaining the Shuttle attitude required for any specified Orbiter activity. Reference Mission 2 trajectories, an ephemeris tape for the period 1986-1995, a modified version of the SAPT processor, and three special subroutines are combined to form the computational basis for calculating look angles to TDRS targets.

REPRODUCIBILITY OF THE
ORIGINAL PAGE IS POOR



```
78  RUN card
78  ASG S=tape# : a tape with the SAPT program & related subroutines
78  ASG F=tape# : trajectory tape for the mission
78  ASG K=tape# : ephemeris tape for 1986 - 1995
78  XQT CUR
    TRW F,S,K
    IN S
    IN S
    TRI S
78  XQT SAPTP
    1986 12 01 13 59 59.9 : base date card
    descriptor data
END CARD
78  EØF
```

FIGURE 4. TYPICAL RUN DECK FOR SAPT PROGRAM

The direction determined by the yaw-pitch look angle sequence is converted into a Shuttle roll quadrant to determine the proper S-Band Quad Antenna for communication to a TDRS. (Note: a pitch-yaw sequence may result in a different look angle direction).

Subroutine SWITCH determines the roll quadrant based on each yaw-pitch look angle using the limits shown in Table II. A listing of the Subroutine SWITCH appears in Appendix II.

Look angle calculations are performed at the same GET's for both synchronous TDRS's. Both TDRS's are located 5.6107 earth radii above the equator with one at a longitude of 41°W and the other TDRS at 171°W. Since communication is assumed to be with only one TDRS at any given time, a subroutine TDRSIF was written which defines the range limits of each TDRS. A comparison between the Shuttle longitude and each TDRS longitude determines the closer TDRS for communication. A method for insuring proper TDRS target longitudes is employed in TDRSIF so that consecutive descriptors alternate between TDRS's. A listing of the Subroutine TDRSIF appears in Appendix III.

Subroutine SWPRNT was written as a means for controlling the printed output resulting from TDRS and antenna selections. For example, if the currently selected antenna is the same as the antenna previously selected, then no switch change is required. SWPRNT will not allow the event to be printed if the Shuttle longitude is out of the range of the current TDRS longitude limits or if the current selected antenna is the

| For o° < YAW ≤ 180° | | For 180° < YAW ≤ 360° |
|---|---|---|
| Upper Right (UR) | o° < pitch ≤ 90° | Upper Left (UL) |
| Upper Left (UL) | 90° < pitch ≤ 180° | Upper Right (UR) |
| Lower Left (LL) | 180° < pitch ≤ 270° | Lower Right (LR) |
| Lower Right (LR) | 270° < pitch ≤ 360° | Lower Left (LL) |

TABLE II. LIMITS FOR SUBROUTINE SWITCH

same as the previously selected antenna. A listing of SWPRNT is included in Appendix IV.

A simplified flowchart of the SAPT processor along with the three special subroutines is shown in Figure 5. The descriptor input event set is read by a subroutine called in SAPT. The event set defines the attitude for the Shuttle and the target information, which in this case is the TDRS located at 41°W longitude. A yaw-pitch look angle to the TDRS is calculated in SAPT. However, if the Shuttle is not in the range of the TDRS 41°W, then the look angles to this target will be disregarded and look angles to TDRS 171°W will be computed. Descriptors are arranged so that caluclations to both TDRS's are computed at simultaneous GET's. If the test in TDRSIF is sucessful, that is the Shuttle is closer to the TDRS at 41°W, then an antenna selection is made in Subroutine SWITCH. SWITCH also compares the currently selected antenna to the previously selected antenna. When a different antenna selection occurs an output is to be printed. Otherwise, no information is printed and the next input event is read. Subroutine SWPRNT is then called by SAPT assuming an antenna change has occurred. SWPRNT prints the selected antenna and the current number of total switch position changes. The next event set is then read. A printout of an actual run deck used for simulation of a 0.5° per second roll is given in Appendix V.

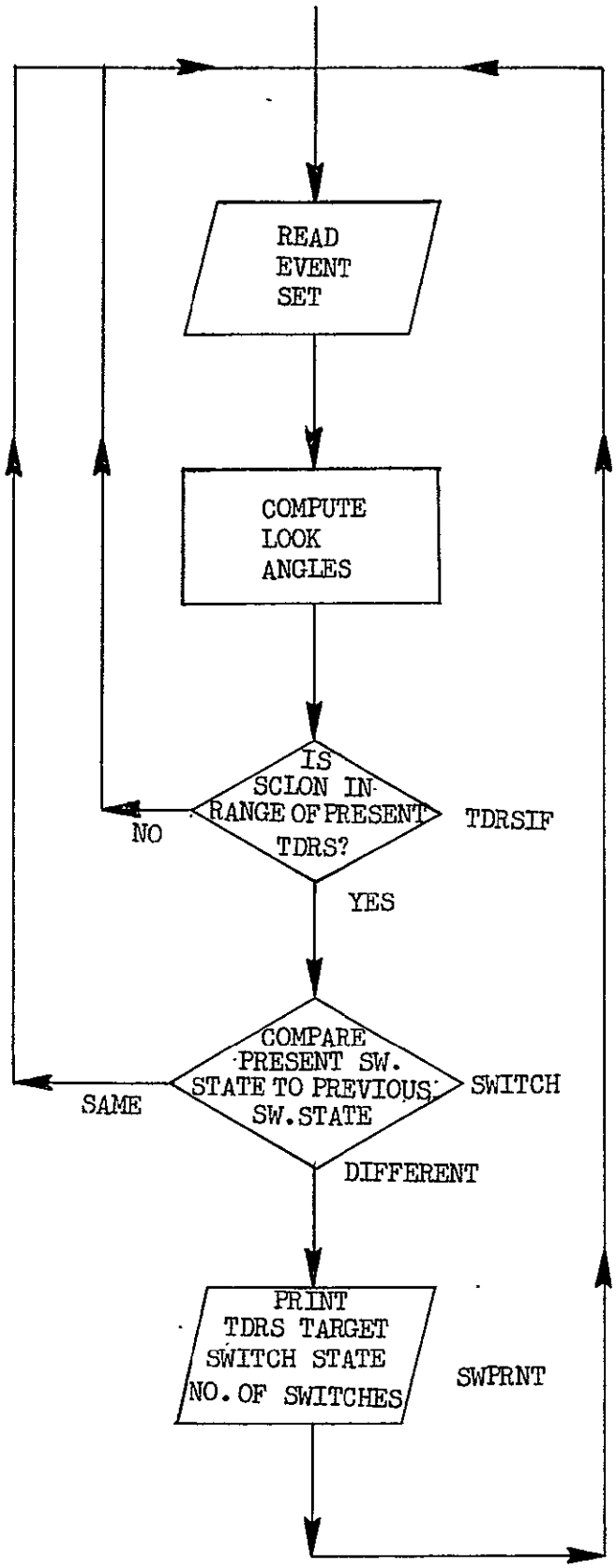


FIGURE 5. FLOW CHART FOR SAPT/SWITCH/SWPRNT/TDRSIF

## V. COMPUTER PROGRAM RESULTS

The results of the computer runs are shown in Tables II-XI. In each run the GET begins at approximately 50 hours from launch and represents particular mission activities. This approach of simulating particular activities was choosen for two reasons. The first is the presently planned activities may be changed at a future date, thus exact simulation of a particular mission would be invalid at a later date. The second reason is that a detailed simulation could easily require 50 hours of Johnson Space Center computer time which would have an excessive cost. The simulations for each activity last for approximately one orbit except for star tracking which lasts only 60 minutes due to earth blockage effects.

Table III shows that 31 switch position changes are required for an earth centered inertial (ECI) roll rate of 0.5° per second during a single orbit. It is noted that the TDRS at -171° (171°W) longitude is used for the first 42 minutes and that the -41° (41°W) longitude TDRS is used during the remainder of the period. Calculations for this printout were made every minute and a printout of data occurs only when an antenna change occurs. Also, the antenna selected and the number of position changes is printed. For example, at 50 hours 46 minutes 0 seconds the lower right antenna is used with the TDRS at 41°W longitude. Three minutes later the antenna is changed to the upper right with the same TDRS.

SHUTTLE ATTITUDE AND POINTING TIME LINE

| GET HRS | MN | SECS | EVENT | VEHICLE POSITION ALT N MI | LAT DEG | LON DEG | LVLH ATTITUDE YAW DEG | PITCH DEG | ROLL DEG | ECI ATTITUDE YAW DEG | PITCH DEG | ROLL DEG | LOOK ANGLES TO SUN YAW DEG | PITCH DEG | LOOK ANGLES TO EARTH YAW DEG | PITCH DEG | LOOK ANGLES TO TARGET TARG ID | YAW DEG | PITCH DEG |
|---|---|---|---|---|---|---|---|---|---|---|---|---|---|---|---|---|---|---|---|
| 50 | 0 | .0 | TDRS -171 | 233.6 | -50.5 | 93.8 | .0 | -.0 | -.0 | 156.3 | 16.1 | 323.4 | 86.4 | 345.4 | .0 | 270.0 | | 337.9 | 347.6 |
| | | | SBQANT IS LOWER LT | | | 1 SWITCH POS CHANGES | | | | | | | | | | | | | |
| 50 | 2 | .0 | TDRS -171 | 236.7 | -53.4 | 105.0 | .0 | 7.8 | 60.0 | 156.3 | 16.1 | 23.4 | 85.1 | 45.3 | 98.9 | 330.3 | | .5 | 334.5 |
| | | | SBQANT IS LOWER RT | | | 2 SWITCH POS CHANGES | | | | | | | | | | | | | |
| 50 | 5 | .0 | TDRS -171 | 237.2 | -55.2 | 123.8 | .0 | 19.3 | 150.0 | 156.3 | 16.1 | 113.4 | 274.8 | 44.5 | 125.1 | 54.8 | | 25.8 | .8 |
| | | | SBQANT IS UPPER RT | | | 3 SWITCH POS CHANGES | | | | | | | | | | | | | |
| 50 | 8 | .0 | TDRS -171 | 237.2 | -53.8 | 142.9 | .0 | 31.0 | 240.0 | 156.3 | 16.1 | 203.4 | 274.9 | 314.7 | 235.3 | 25.4 | | 359.1 | 25.9 |
| | | | SBQANT IS UPPER LT | | | 4 SWITCH POS CHANGES | | | | | | | | | | | | | |
| 50 | 11 | .0 | TDRS -171 | 237.1 | -49.4 | 159.4 | .1 | 42.5 | 330.0 | 156.3 | 16.1 | 293.4 | 85.2 | 315.5 | 208.6 | 320.3 | | 334.3 | 359.4 |
| | | | SBQANT IS LOWER LT | | | 5 SWITCH POS CHANGES | | | | | | | | | | | | | |
| 50 | 15 | .0 | TDRS -171 | 235.9 | -40.4 | 176.2 | .1 | 58.0 | 90.1 | 156.3 | 16.1 | 53.4 | 76.6 | 75.0 | 148.0 | .0 | | 13.0 | 338.3 |
| | | | SBQANT IS LOWER RT | | | 6 SWITCH POS CHANGES | | | | | | | | | | | | | |
| 50 | 18 | .0 | TDRS -171 | 235.9 | -32.3 | -174.3 | .2 | 69.6 | 180.1 | 156.3 | 16.1 | 143.4 | 273.6 | 14.6 | 180.1 | 20.4 | | 21.9 | 10.9 |
| | | | SBQANT IS UPPER RT | | | 7 SWITCH POS CHANGES | | | | | | | | | | | | | |
| 50 | 21 | .0 | TDRS -171 | 233.8 | -23.4 | -166.5 | .5 | 81.2 | 270.4 | 156.3 | 16.1 | 233.4 | 283.4 | 285.0 | 188.8 | 359.9 | | 349.9 | 21.1 |
| | | | SBQANT IS UPPER LT | | | 8 SWITCH POS CHANGES | | | | | | | | | | | | | |
| 50 | 24 | .0 | TDRS -171 | 234.1 | -14.1 | -159.8 | 178.6 | 87.2 | 178.5 | 156.3 | 16.1 | 323.4 | 86.4 | 345.4 | 179.9 | 2.8 | | 339.2 | 352.1 |
| | | | SBQANT IS LOWER LT | | | 9 SWITCH POS CHANGES | | | | | | | | | | | | | |
| 50 | 27 | .0 | TDRS -171 | 232.1 | -4.6 | -153.7 | 179.7 | 75.6 | 269.7 | 156.3 | 16.1 | 53.4 | 76.6 | 75.0 | 194.4 | .1 | | 6.6 | 340.2 |
| | | | SBQANT IS LOWER RT | | | 10 SWITCH POS CHANGES | | | | | | | | | | | | | |
| 50 | 30 | .0 | TDRS -171 | 232.5 | 5.0 | -147.9 | 179.8 | 64.0 | 359.8 | 156.3 | 16.1 | 143.4 | 273.6 | 14.6 | 180.1 | 334.0 | | 19.0 | 4.7 |
| | | | SBQANT IS UPPER RT | | | 11 SWITCH POS CHANGES | | | | | | | | | | | | | |
| 50 | 33 | .0 | TDRS -171 | 232.3 | 14.5 | -141.8 | 179.9 | 52.4 | 89.8 | 156.3 | 16.1 | 233.4 | 283.4 | 285.0 | 142.4 | 359.9 | | 356.5 | 17.9 |
| | | | SBQANT IS UPPER LT | | | 12 SWITCH POS CHANGES | | | | | | | | | | | | | |
| 50 | 36 | .0 | TDRS -171 | 232.7 | 23.7 | -135.1 | 179.9 | 40.8 | 179.9 | 156.3 | 16.1 | 323.4 | 86.5 | 345.4 | 179.9 | 49.2 | | 343.1 | 357.8 |
| | | | SBQANT IS LOWER LT | | | 13 SWITCH POS CHANGES | | | | | | | | | | | | | |
| 50 | 39 | .0 | TDRS -171 | 233.6 | 32.6 | -127.3 | 179.9 | 29.2 | 269.9 | 156.3 | 16.1 | 53.4 | 76.6 | 75.0 | 240.8 | .1 | | 1.6 | 344.3 |
| | | | SBQANT IS LOWER RT | | | 14 SWITCH POS CHANGES | | | | | | | | | | | | | |
| 50 | 42 | .0 | TDRS -171 | 233.2 | 40.7 | -117.7 | 179.9 | 17.6 | 359.9 | 156.3 | 16.1 | 143.4 | 273.5 | 14.6 | 180.2 | 287.6 | | 14.6 | 1.2 |
| | | | SBQANT IS UPPER RT | | | 15 SWITCH POS CHANGES | | | | | | | | | | | | | |
| 50 | 45 | .0 | TDRS -41 | 236.4 | 47.6 | -105.5 | 179.9 | 6.0 | 89.9 | 156.3 | 16.1 | 233.4 | 283.4 | 285.0 | 96.0 | 359.9 | | 198.4 | 309.1 |
| | | | SBQANT IS LOWER LT | | | 16 SWITCH POS CHANGES | | | | | | | | | | | | | |
| 50 | 46 | .0 | TDRS -41 | 236.4 | 49.6 | -100.7 | 179.9 | 2.2 | 120.0 | 156.3 | 16.1 | 263.4 | 77.3 | 285.8 | 92.5 | 29.9 | | 159.8 | 309.3 |
| | | | SBQANT IS LOWER RT | | | 17 SWITCH POS CHANGES | | | | | | | | | | | | | |
| 50 | 49 | .0 | TDRS -41 | 236.2 | 53.9 | -84.1 | 179.9 | 350.6 | 210.0 | 156.3 | 16.1 | 353.4 | 86.4 | 15.4 | 288.4 | 58.7 | | 126.7 | 13.0 |
| | | | SBQANT IS UPPER RT | | | 18 SWITCH POS CHANGES | | | | | | | | | | | | | |
| 50 | 52 | .0 | TDRS -41 | 237.5 | 55.2 | -65.0 | 179.9 | 339.0 | 300.0 | 156.3 | 16.1 | 83.4 | 282.7 | 74.2 | 293.9 | 332.2 | | 201.6 | 52.3 |
| | | | SBQANT IS UPPER LT | | | 19 SWITCH POS CHANGES | | | | | | | | | | | | | |
| 50 | 55 | .0 | TDRS -41 | 236.6 | 53.3 | -46.2 | 179.8 | 327.4 | 30.0 | 156.3 | 16.1 | 173.4 | 273.6 | 344.6 | 38.0 | 313.2 | | 235.3 | 347.4 |
| | | | SBQANT IS LOWER LT | | | 20 SWITCH POS CHANGES | | | | | | | | | | | | | |
| 50 | 58 | .0 | TDRS -41 | 236.1 | 48.5 | -30.2 | 179.8 | 315.8 | 120.1 | 156.3 | 16.1 | 263.4 | 77.3 | 285.8 | 41.6 | 21.1 | | 159.3 | 305.6 |
| | | | SBQANT IS LOWER RT | | | 21 SWITCH POS CHANGES | | | | | | | | | | | | | |
| 51 | 1 | .0 | TDRS -41 | 235.0 | 41.8 | -17.5 | 179.7 | 304.2 | 210.2 | 156.3 | 16.1 | 353.4 | 86.5 | 15.4 | 341.1 | 29.1 | | 123.0 | 10.8 |
| | | | SBQANT IS UPPER RT | | | 22 SWITCH POS CHANGES | | | | | | | | | | | | | |
| 51 | 4 | .0 | TDRS -41 | 235.3 | 33.8 | -7.6 | 179.5 | 292.6 | 300.3 | 156.3 | 16.1 | 83.4 | 282.7 | 74.2 | 340.3 | 348.8 | | 197.2 | 56.3 |
| | | | SBQANT IS UPPER LT | | | 23 SWITCH POS CHANGES | | | | | | | | | | | | | |
| 51 | 7 | .0 | TDRS -41 | 235.9 | 25.1 | .4 | 179.0 | 281.0 | 30.8 | 156.3 | 16.1 | 173.4 | 273.5 | 344.6 | 5.7 | 350.6 | | 237.8 | 352.1 |
| | | | SBQANT IS LOWER LT | | | 24 SWITCH POS CHANGES | | | | | | | | | | | | | |
| 51 | 10 | .0 | TDRS -41 | 231.3 | 15.8 | 7.2 | 16.0 | 270.7 | 283.9 | 156.3 | 16.1 | 263.4 | 77.4 | 285.8 | 359.4 | 359.8 | | 168.4 | 302.9 |
| | | | SBQANT IS LOWER RT | | | 25 SWITCH POS CHANGES | | | | | | | | | | | | | |
| 51 | 13 | .0 | TDRS -41 | 230.8 | 6.3 | 13.4 | .9 | 282.2 | 29.1 | 156.3 | 16.1 | 353.4 | 86.5 | 15.4 | 6.0 | 349.3 | | 122.8 | 4.7 |
| | | | SBQANT IS UPPER RT | | | 26 SWITCH POS CHANGES | | | | | | | | | | | | | |

Table III. ECI Roll of 0.5° per second Simulation



REPRODUCIBILITY OF THE ORIGINAL PAGE IS POOR

SHUTTLE ATTITUDE AND POINTING TIME LINE

| GET HRS | GET MN | GET SECS | EVENT | VEHICLE POSITION ALT N MI | VEHICLE POSITION LAT DEG | VEHICLE POSITION LON DEG | LVLH ATTITUDE YAW DEG | LVLH ATTITUDE PITCH DEG | LVLH ATTITUDE ROLL DEG | ECI ATTITUDE YAW DEG | ECI ATTITUDE PITCH DEG | ECI ATTITUDE ROLL DEG | LOOK ANGLES TO SUN YAW DEG | LOOK ANGLES TO SUN PITCH DEG | LOOK ANGLES TO EARTH YAW DEG | LOOK ANGLES TO EARTH PITCH DEG | LOOK ANGLES TO TARGET TARG ID | LOOK ANGLES TO TARGET YAW DEG | LOOK ANGLES TO TARGET PITCH DEG |
|---|---|---|---|---|---|---|---|---|---|---|---|---|---|---|---|---|---|---|---|
| 51 | 16 | .0 | TDRS -41 | 230.1 | -3.3 | 19.3 | .5 | 293.8 | 119.5 | 156.3 | 16.1 | 83.4 | 282.6 | 74.2 | 21.0 | 11.5 | | 185.7 | 56.3 |
| | | | SBQANT IS UPPER LT | | | 27 SWITCH POS CHANGES | | | | | | | | | | | | | |
| 51 | 19 | .0 | TDRS -41 | 230.7 | -12.8 | 25.3 | .3 | 305.5 | 209.6 | 156.3 | 16.1 | 173.4 | 273.5 | 344.6 | 340.6 | 30.3 | | 235.4 | 358.1 |
| | | | SBQANT IS LOWER LT | | | 28 SWITCH POS CHANGES | | | | | | | | | | | | | |
| 51 | 22 | .0 | TDRS -41 | 231.3 | -22.1 | 31.9 | .3 | 317.1 | 299.7 | 156.3 | 16.1 | 263.4 | 77.4 | 285.8 | 317.0 | 338.7 | | 178.7 | 306.0 |
| | | | SBQANT IS LOWER RT | | | 29 SWITCH POS CHANGES | | | | | | | | | | | | | |
| 51 | 26 | .0 | TDRS -41 | 232.8 | -33.9 | 42.3 | .2 | 332.5 | 59.8 | 156.3 | 16.1 | 23.4 | 85.2 | 45.3 | 59.0 | 333.5 | | 132.2 | 22.9 |
| | | | SBQANT IS UPPER RT | | | 30 SWITCH POS CHANGES | | | | | | | | | | | | | |
| 51 | 29 | .0 | TDRS -41 | 233.2 | -41.9 | 52.3 | .2 | 344.2 | 149.9 | 156.3 | 16.1 | 113.4 | 274.8 | 44.5 | 60.5 | 56.3 | | 210.2 | 41.9 |
| | | | SBQANT IS UPPER LT | | | 31 SWITCH POS CHANGES | | | | | | | | | | | | | |

Table III. (Continued)

SHUTTLE ATTITUDE AND POINTING TIME LINE

| GET HRS | GET MN | GET SECS | EVENT | VEHICLE POSITION ALT N MI | VEHICLE POSITION LAT DEG | VEHICLE POSITION LON DEG | LVLH ATTITUDE YAW DEG | LVLH ATTITUDE PITCH DEG | LVLH ATTITUDE ROLL DEG | ECI ATTITUDE YAW DEG | ECI ATTITUDE PITCH DEG | ECI ATTITUDE ROLL DEG | LOOK ANGLES TO SUN YAW DEG | LOOK ANGLES TO SUN PITCH DEG | LOOK ANGLES TO EARTH YAW DEG | LOOK ANGLES TO EARTH PITCH DEG | LOOK ANGLES TO TARGET TARG ID | LOOK ANGLES TO TARGET YAW DEG | LOOK ANGLES TO TARGET PITCH DEG |
|---|---|---|---|---|---|---|---|---|---|---|---|---|---|---|---|---|---|---|---|
| 50 | 0 | .0 | TDRS -171 | 233.6 | -50.5 | 93.8 | .0 | -.0 | -.0 | 156.3 | 16.1 | 323.4 | 86.4 | 345.4 | .0 | 270.0 | | 337.9 | 347.6 |
| | | | SBQANT IS LOWER LT | | | 1 SWITCH POS CHANGES | | | | | | | | | | | | | |
| 50 | 6 | .0 | TDRS -171 | 237.2 | -55.1 | 130.3 | 180.0 | 336.8 | 180.0 | 336.3 | 343.9 | 216.6 | 93.6 | 14.6 | .0 | 66.8 | | 202.4 | 13.3 |
| | | | SBQANT IS UPPER LT | | | 2 SWITCH POS CHANGES | | | | | | | | | | | | | |
| 50 | 12 | .0 | TDRS -171 | 237.0 | -47.4 | 164.1 | .1 | 46.4 | .0 | 156.3 | 16.1 | 323.4 | 86.4 | 345.4 | 180.0 | 316.4 | | 337.6 | 347.2 |
| | | | SBQANT IS LOWER LT | | | 3 SWITCH POS CHANGES | | | | | | | | | | | | | |
| 50 | 18 | .0 | TDRS -171 | 235.9 | -32.3 | -174.3 | 180.2 | 290.4 | 179.9 | 336.3 | 343.9 | 216.6 | 93.6 | 14.6 | .1 | 20.4 | | 201.9 | 10.9 |
| | | | SBQANT IS UPPER LT | | | 4 SWITCH POS CHANGES | | | | | | | | | | | | | |
| 50 | 24 | .0 | TDRS -171 | 234.1 | -14.1 | -159.8 | 178.6 | 87.2 | 178.5 | 156.3 | 16.1 | 323.4 | 86.4 | 345.4 | 179.9 | 2.8 | | 339.2 | 352.1 |
| | | | SBQANT IS LOWER LT | | | 5 SWITCH POS CHANGES | | | | | | | | | | | | | |
| 50 | 30 | .0 | TDRS -171 | 232.5 | 5.0 | -147.9 | 359.8 | 296.0 | .2 | 336.3 | 343.9 | 216.6 | 93.6 | 14.6 | .1 | 334.0 | | 199.0 | 4.7 |
| | | | SBQANT IS UPPER LT | | | 6 SWITCH POS CHANGES | | | | | | | | | | | | | |
| 50 | 36 | .0 | TDRS -171 | 232.7 | 23.7 | -135.1 | 179.9 | 40.8 | 179.9 | 156.3 | 16.1 | 323.4 | 86.5 | 345.4 | 179.9 | 49.2 | | 343.1 | 357.8 |
| | | | SBQANT IS LOWER LT | | | 7 SWITCH POS CHANGES | | | | | | | | | | | | | |
| 50 | 42 | .0 | TDRS -171 | 233.2 | 40.7 | -117.7 | 359.9 | 342.4 | .1 | 336.3 | 343.9 | 216.6 | 93.5 | 14.6 | .2 | 287.6 | | 194.6 | 1.2 |
| | | | SBQANT IS UPPER LT | | | 8 SWITCH POS CHANGES | | | | | | | | | | | | | |
| 50 | 45 | .0 | TDRS -41 | 236.4 | 47.6 | -105.5 | .4 | 84.0 | .5 | 225.7 | 309.5 | 295.9 | 75.4 | 3.4 | 179.9 | 354.0 | | 75.6 | 323.2 |
| | | | SBQANT IS LOWER RT | | | 9 SWITCH POS CHANGES | | | | | | | | | | | | | |
| 50 | 49 | .0 | TDRS -41 | 236.2 | 53.9 | -84.1 | 179.9 | 320.6 | 180.0 | 133.8 | 38.8 | 312.9 | 94.4 | 345.7 | .0 | 50.6 | | 127.3 | 7.0 |
| | | | SBQANT IS UPPER RT | | | 10 SWITCH POS CHANGES | | | | | | | | | | | | | |
| 50 | 55 | .0 | TDRS -41 | 236.6 | 53.3 | -46.2 | 359.8 | 62.6 | 359.9 | 313.8 | 321.2 | 227.2 | 85.6 | 14.3 | 180.0 | 332.6 | | 53.9 | 354.6 |
| | | | SBQANT IS LOWER RT | | | 11 SWITCH POS CHANGES | | | | | | | | | | | | | |
| 51 | 1 | .0 | TDRS -41 | 235.0 | 41.8 | -17.5 | 178.4 | 274.2 | 181.4 | 133.8 | 38.8 | 312.8 | 94.4 | 345.7 | 359.9 | 4.2 | | 126.1 | 3.0 |
| | | | SBQANT IS UPPER RT | | | 12 SWITCH POS CHANGES | | | | | | | | | | | | | |
| 51 | 7 | .0 | TDRS -41 | 235.9 | 25.1 | .4 | 180.3 | 71.0 | 180.5 | 313.8 | 321.2 | 227.2 | 85.6 | 14.3 | 180.2 | 19.0 | | 52.6 | 359.7 |
| | | | SBQANT IS LOWER RT | | | 13 SWITCH POS CHANGES | | | | | | | | | | | | | |
| 51 | 14 | .0 | TDRS -41 | 230.2 | 3.1 | 15.3 | .0 | 346.1 | 359.8 | 95.3 | 53.8 | 284.2 | 101.0 | 349.8 | 359.2 | 283.9 | | 127.3 | 17.0 |
| | | | SBQANT IS UPPER RT | | | 14 SWITCH POS CHANGES | | | | | | | | | | | | | |
| 51 | 20 | .0 | TDRS -41 | 230.7 | -15.9 | 27.4 | 180.0 | 350.7 | 180.2 | 275.3 | 306.2 | 255.8 | 79.0 | 10.2 | 358.7 | 80.7 | | 49.2 | 342.3 |
| | | | SBQANT IS LOWER RT | | | 15 SWITCH POS CHANGES | | | | | | | | | | | | | |
| 51 | 26 | .0 | TDRS -41 | 232.8 | -33.9 | 42.3 | .0 | 32.5 | 359.8 | 95.3 | 53.8 | 284.2 | 101.0 | 349.8 | 180.3 | 302.5 | | 133.8 | 19.7 |
| | | | SBQANT IS UPPER RT | | | 16 SWITCH POS CHANGES | | | | | | | | | | | | | |

Table IV. ECI pitch of .5° per second simulation

REPRODUCIBILITY OF THE ORIGINAL PAGE IS POOR

SHUTTLE ATTITUDE AND POINTING TIME LINE

| GET HRS | GET MN | GET SECS | EVENT | VEHICLE POSITION ALT N MI | VEHICLE POSITION LAT DEG | VEHICLE POSITION LON DEG | LVLH ATTITUDE YAW DEG | LVLH ATTITUDE PITCH DEG | LVLH ATTITUDE ROLL DEG | ECI ATTITUDE YAW DEG | ECI ATTITUDE PITCH DEG | ECI ATTITUDE ROLL DEG | LOOK ANGLES TO SUN YAW DEG | LOOK ANGLES TO SUN PITCH DEG | LOOK ANGLES TO EARTH YAW DEG | LOOK ANGLES TO EARTH PITCH DEG | LOOK ANGLES TO TARGET TARG ID | LOOK ANGLES TO TARGET YAW DEG | LOOK ANGLES TO TARGET PITCH DEG |
|---|---|---|---|---|---|---|---|---|---|---|---|---|---|---|---|---|---|---|---|
| 50 | 0 | .0 | TDRS -171 | 233.6 | -50.5 | 93.8 | .0 | -.0 | -.0 | 156.3 | 16.1 | 323.4 | 86.4 | 345.4 | .0 | 270.0 | | 337.9 | 347.6 |
| | | | SBQANT IS LOWER LT | | | 1 SWITCH POS CHANGES | | | | | | | | | | | | | |
| 50 | 6 | .0 | TDRS -171 | 237.2 | -55.1 | 130.3 | 180.0 | 336.8 | -.0 | 336.3 | 343.9 | 36.6 | 266.4 | 345.4 | 360.0 | 293.2 | | 157.6 | 346.7 |
| | | | SBQANT IS LOWER RT | | | 2 SWITCH POS CHANGES | | | | | | | | | | | | | |
| 50 | 12 | .0 | TDRS -171 | 237.0 | -47.4 | 164.1 | .1 | 46.4 | .0 | 156.3 | 16.1 | 323.4 | 86.4 | 345.4 | 180.0 | 316.4 | | 337.6 | 347.2 |
| | | | SBQANT IS LOWER LT | | | 3 SWITCH POS CHANGES | | | | | | | | | | | | | |
| 50 | 18 | .0 | TDRS -171 | 235.9 | -32.3 | -174.3 | 180.2 | 290.4 | 359.9 | 336.3 | 343.9 | 36.6 | 266.4 | 345.4 | 359.9 | 339.6 | | 158.1 | 349.1 |
| | | | SBQANT IS LOWER RT | | | 4 SWITCH POS CHANGES | | | | | | | | | | | | | |
| 50 | 24 | .0 | TDRS -171 | 234.1 | -14.1 | -159.8 | 178.6 | 87.2 | 178.5 | 156.3 | 16.1 | 323.4 | 86.4 | 345.4 | 179.9 | 2.8 | | 339.2 | 352.1 |
| | | | SBQANT IS LOWER LT | | | 5 SWITCH POS CHANGES | | | | | | | | | | | | | |
| 50 | 30 | .0 | TDRS -171 | 232.5 | 5.0 | -147.9 | 359.8 | 296.0 | 180.2 | 336.3 | 343.9 | 36.6 | 266.4 | 345.4 | 359.9 | 26.0 | | 161.0 | 355.3 |
| | | | SBQANT IS LOWER RT | | | 6 SWITCH POS CHANGES | | | | | | | | | | | | | |
| 50 | 36 | .0 | TDRS -171 | 232.7 | 23.7 | -135.1 | 179.9 | 40.8 | 179.9 | 156.3 | 16.1 | 323.4 | 86.5 | 345.4 | 179.9 | 49.2 | | 343.1 | 357.8 |
| | | | SBQANT IS LOWER LT | | | 7 SWITCH POS CHANGES | | | | | | | | | | | | | |
| 50 | 42 | .0 | TDRS -171 | 233.2 | 40.7 | -117.7 | 359.9 | 342.4 | 180.1 | 336.3 | 343.9 | 36.6 | 266.5 | 345.4 | 359.8 | 72.4 | | 165.4 | 358.8 |
| | | | SBQANT IS LOWER RT | | | 8 SWITCH POS CHANGES | | | | | | | | | | | | | |
| 50 | 45 | .0 | TDRS -41 | 236.4 | 47.6 | -106.5 | 269.9 | .1 | 186.0 | 77.9 | 325.1 | 340.2 | 176.5 | 345.4 | 269.5 | 84.0 | | 217.6 | 348.5 |
| | | | SBQANT IS LOWER LT | | | 9 SWITCH POS CHANGES | | | | | | | | | | | | | |
| 50 | 47 | .0 | TDRS -41 | 236.4 | 51.3 | -95.6 | 209.9 | 358.6 | 179.1 | 132.6 | 357.4 | 320.6 | 116.5 | 345.4 | 31.3 | 88.3 | | 157.0 | 348.7 |
| | | | SBQANT IS LOWER RT | | | 10 SWITCH POS CHANGES | | | | | | | | | | | | | |
| 50 | 53 | .0 | TDRS -41 | 237.2 | 54.9 | -58.6 | 32.3 | 21.4 | 193.0 | 312.6 | 2.6 | 39.4 | 296.5 | 345.4 | 210.0 | 65.1 | | 335.2 | 348.3 |
| | | | SBQANT IS LOWER LT | | | 11 SWITCH POS CHANGES | | | | | | | | | | | | | |
| 50 | 59 | .0 | TDRS -41 | 235.7 | 46.5 | -25.6 | 220.6 | 319.8 | 151.0 | 132.6 | 357.4 | 320.6 | 116.5 | 345.5 | 29.9 | 41.9 | | 153.8 | 346.4 |
| | | | SBQANT IS LOWER RT | | | 12 SWITCH POS CHANGES | | | | | | | | | | | | | |
| 51 | 5 | .0 | TDRS -41 | 235.4 | 31.0 | -4.8 | 60.7 | 55.2 | 235.7 | 312.6 | 2.6 | 39.4 | 296.5 | 345.5 | 209.8 | 18.7 | | 333.5 | 343.6 |
| | | | SBQANT IS LOWER LT | | | 13 SWITCH POS CHANGES | | | | | | | | | | | | | |
| 51 | 11 | .0 | TDRS -41 | 231.0 | 12.7 | 9.3 | 277.7 | 300.1 | 81.0 | 132.6 | 357.4 | 320.6 | 116.5 | 345.5 | 29.8 | 355.5 | | 154.5 | 340.5 |
| | | | SBQANT IS LOWER RT | | | 14 SWITCH POS CHANGES | | | | | | | | | | | | | |
| 51 | 17 | .0 | TDRS -41 | 230.2 | -6.4 | 21.3 | 129.0 | 50.2 | 316.6 | 312.6 | 2.6 | 39.4 | 296.5 | 345.5 | 209.8 | 332.3 | | 336.9 | 338.1 |
| | | | SBQANT IS LOWER LT | | | 15 SWITCH POS CHANGES | | | | | | | | | | | | | |
| 51 | 23 | .0 | TDRS -41 | 231.7 | -25.1 | 34.3 | 323.6 | 326.8 | 21.9 | 132.6 | 357.4 | 320.6 | 116.5 | 345.5 | 29.7 | 309.1 | | 160.3 | 336.8 |
| | | | SBQANT IS LOWER RT | | | 16 SWITCH POS CHANGES | | | | | | | | | | | | | |
| 51 | 29 | .0 | TDRS -41 | 233.2 | -41.9 | 52.3 | 149.2 | 13.8 | 352.0 | 312.6 | 2.6 | 39.4 | 296.5 | 345.5 | 209.5 | 285.8 | | 344.3 | 336.9 |
| | | | SBQANT IS LOWER LT | | | 17 SWITCH POS CHANGES | | | | | | | | | | | | | |

Table V. ECI Yaw of 0.5° per second simulation

SHUTTLE ATTITUDE AND POINTING TIME LINE

| GET HRS | GET MN | GET SECS | EVENT | VEHICLE POSITION ALT N.MI | VEHICLE POSITION LAT DEG | VEHICLE POSITION LON DEG | LVLH ATTITUDE YAW DEG | LVLH ATTITUDE PITCH DEG | LVLH ATTITUDE ROLL DEG | ECI ATTITUDE YAW DEG | ECI ATTITUDE PITCH DEG | ECI ATTITUDE ROLL DEG | LOOK ANGLES TO SUN YAW DEG | LOOK ANGLES TO SUN PITCH DEG | LOOK ANGLES TO EARTH YAW DEG | LOOK ANGLES TO EARTH PITCH DEG | LOOK ANGLES TO TARGET TARG ID | LOOK ANGLES TO TARGET YAW DEG | LOOK ANGLES TO TARGET PITCH DEG |
|---|---|---|---|---|---|---|---|---|---|---|---|---|---|---|---|---|---|---|---|
| 50 | 0 | .0 | TDRS -171 | 233.6 | -50.5 | 93.8 | 180.0 | 346.5 | -75.0 | 327.3 | 333.2 | 114.9 | .0 | 270.0 | 76.1 | 345.4 | | -148.9 | -14.3 |
| | | | SBQANT IS UPPER RT | | | 1 SWITCH POS CHANGES | | | | | | | | | | | | | |
| 50 | 3 | .0 | TDRS -171 | 236.9 | -54.3 | 111.1 | 180.0 | 334.9 | 165.0 | 327.3 | 333.2 | 204.9 | 90.0 | 360.0 | 28.9 | 61.0 | | 196.6 | 30.7 |
| | | | SBQANT IS UPPER LT | | | 2 SWITCH POS CHANGES | | | | | | | | | | | | | |
| 50 | 6 | .0 | TDRS -171 | 237.2 | -55.1 | 130.3 | 180.0 | 323.3 | 255.0 | 327.3 | 333.2 | 294.9 | 34.7 | 90.0 | 307.6 | 12.0 | | 212.1 | 345.8 |
| | | | SBQANT IS LOWER LT | | | 3 SWITCH POS CHANGES | | | | | | | | | | | | | |
| 50 | 9 | .0 | TDRS -171 | 237.2 | -52.6 | 148.8 | 180.1 | 311.7 | 345.0 | 327.3 | 333.2 | 24.9 | 270.0 | .0 | 347.0 | 320.0 | | 163.3 | 329.0 |
| | | | SBQANT IS LOWER RT | | | 4 SWITCH POS CHANGES | | | | | | | | | | | | | |
| 50 | 12 | .0 | TDRS -171 | 237.0 | -47.4 | 169.1 | 180.1 | 300.1 | 75.0 | 327.3 | 333.2 | 114.9 | 323.1 | 270.0 | 29.3 | 352.5 | | 148.4 | -14.4 |
| | | | SBQANT IS UPPER RT | | | 5 SWITCH POS CHANGES | | | | | | | | | | | | | |
| 50 | 15 | .0 | TDRS -171 | 235.9 | -40.4 | 176.2 | 180.2 | 288.5 | 164.9 | 327.3 | 333.2 | 204.9 | 90.0 | 360.0 | 5.0 | 17.8 | | 196.7 | 29.7 |
| | | | SBQANT IS UPPER LT | | | 6 SWITCH POS CHANGES | | | | | | | | | | | | | |
| 50 | 18 | .0 | TDRS -171 | 235.9 | -32.3 | 174.3 | 180.5 | 276.9 | 254.6 | 327.3 | 333.2 | 294.9 | 39.1 | 90.0 | 353.3 | 1.8 | | 209.5 | 345.4 |
| | | | SBQANT IS LOWER LT | | | 7 SWITCH POS CHANGES | | | | | | | | | | | | | |
| 50 | 21 | .0 | TDRS -171 | 233.8 | -23.4 | 166.5 | 359.3 | 274.7 | 165.8 | 327.3 | 333.2 | 24.9 | 270.0 | .0 | 1.2 | 4.5 | | 163.6 | 333.0 |
| | | | SBQANT IS LOWER RT | | | 8 SWITCH POS CHANGES | | | | | | | | | | | | | |
| 50 | 24 | .0 | TDRS -171 | 234.1 | -14.1 | 159.8 | 359.8 | 286.3 | 255.3 | 327.3 | 333.2 | 114.9 | 318.9 | 270.0 | 344.2 | 4.1 | | 153.8 | -14.4 |
| | | | SBQANT IS UPPER RT | | | 9 SWITCH POS CHANGES | | | | | | | | | | | | | |
| 50 | 26 | .0 | TDRS -171 | 232.0 | -7.8 | 155.7 | 359.9 | 294.0 | 315.2 | 327.3 | 333.2 | 174.9 | 90.0 | 330.0 | 342.6 | 343.2 | | 180.5 | 28.5 |
| | | | SBQANT IS UPPER LT | | | 10 SWITCH POS CHANGES | | | | | | | | | | | | | |
| 50 | 29 | .0 | TDRS -171 | 232.3 | 1.8 | -149.8 | 359.9 | 305.6 | 45.2 | 327.3 | 333.2 | 264.9 | 90.0 | 60.0 | 26.9 | 335.8 | | 206.8 | 359.1 |
| | | | SBQANT IS LOWER LT | | | 11 SWITCH POS CHANGES | | | | | | | | | | | | | |
| 50 | 32 | .0 | TDRS -171 | 232.1 | 11.3 | -143.8 | 359.9 | 317.2 | 135.1 | 327.3 | 333.2 | 354.9 | 270.0 | 30.0 | 37.3 | 31.3 | | 178.7 | 335.0 |
| | | | SBQANT IS LOWER RT | | | 12 SWITCH POS CHANGES | | | | | | | | | | | | | |
| 50 | 35 | .0 | TDRS -171 | 232.6 | 20.7 | -137.4 | 359.9 | 328.8 | 225.1 | 327.3 | 333.2 | 84.9 | 270.0 | 300.0 | 310.5 | 37.1 | | 156.6 | 1.2 |
| | | | SBQANT IS UPPER RT | | | 13 SWITCH POS CHANGES | | | | | | | | | | | | | |
| 50 | 38 | .0 | TDRS -171 | 233.7 | 29.7 | -130.0 | 359.9 | 340.4 | 315.1 | 327.3 | 333.2 | 174.9 | 90.0 | 330.0 | 296.8 | 318.1 | | 181.1 | 22.0 |
| | | | SBQANT IS UPPER LT | | | 14 SWITCH POS CHANGES | | | | | | | | | | | | | |
| 50 | 41 | .0 | TDRS -171 | 233.3 | 38.1 | -121.1 | 359.9 | 352.0 | 45.1 | 327.3 | 333.2 | 264.9 | 90.0 | 60.0 | 78.8 | 315.6 | | 200.9 | 359.5 |
| | | | SBQANT IS LOWER LT | | | 15 SWITCH POS CHANGES | | | | | | | | | | | | | |
| 50 | 45 | .0 | TDRS -41 | 236.4 | 47.6 | -105.5 | 359.9 | 7.4 | 165.1 | 327.3 | 333.2 | 24.9 | 270.0 | .0 | 116.9 | 73.3 | | 309.5 | 8.5 |
| | | | SBQANT IS UPPER LT | | | 16 SWITCH POS CHANGES | | | | | | | | | | | | | |
| 50 | 46 | .0 | TDRS -41 | 236.4 | 49.6 | -100.7 | 359.9 | 11.3 | 195.1 | 327.3 | 333.2 | 54.9 | 270.0 | 330.0 | 232.4 | 71.2 | | 310.2 | 345.3 |
| | | | SBQANT IS LOWER LT | | | 17 SWITCH POS CHANGES | | | | | | | | | | | | | |
| 50 | 49 | .0 | TDRS -41 | 236.2 | 53.9 | -84.1 | 359.9 | 22.9 | 285.0 | 327.3 | 333.2 | 144.9 | 89.9 | 300.0 | 246.4 | 346.2 | | 22.8 | 311.6 |
| | | | SBQANT IS LOWER RT | | | 18 SWITCH POS CHANGES | | | | | | | | | | | | | |
| 50 | 52 | .0 | TDRS -41 | 237.5 | 55.2 | -65.0 | 359.8 | 34.5 | 15.0 | 327.3 | 333.2 | 234.9 | 90.0 | 30.0 | 159.4 | 307.3 | | 51.5 | 15.5 |
| | | | SBQANT IS UPPER RT | | | 19 SWITCH POS CHANGES | | | | | | | | | | | | | |
| 50 | 55 | .0 | TDRS -41 | 236.6 | 53.3 | -46.2 | 359.8 | 46.1 | 105.0 | 327.3 | 333.2 | 324.9 | 270.1 | 60.0 | 137.1 | 10.3 | | 334.5 | 49.2 |
| | | | SBQANT IS UPPER LT | | | 20 SWITCH POS CHANGES | | | | | | | | | | | | | |
| 50 | 58 | .0 | TDRS -41 | 236.1 | 48.5 | -30.2 | 359.7 | 57.7 | 194.9 | 327.3 | 333.2 | 54.9 | 270.0 | 330.0 | 189.2 | 31.1 | | 307.7 | 342.5 |
| | | | SBQANT IS LOWER LT | | | 21 SWITCH POS CHANGES | | | | | | | | | | | | | |
| 51 | 1 | .0 | TDRS -41 | 235.0 | 41.8 | -17.5 | 359.6 | 69.3 | 284.7 | 327.3 | 333.2 | 144.9 | 89.9 | 300.0 | 200.1 | 354.8 | | 29.1 | 311.5 |
| | | | SBQANT IS LOWER RT | | | 22 SWITCH POS CHANGES | | | | | | | | | | | | | |
| 51 | 4 | .0 | TDRS -41 | 235.3 | 33.8 | -7.6 | 359.0 | 80.9 | 14.2 | 327.3 | 333.2 | 234.9 | 90.0 | 30.0 | 177.8 | 351.2 | | 51.9 | 20.2 |
| | | | SBQANT IS UPPER RT | | | 23 SWITCH POS CHANGES | | | | | | | | | | | | | |
| 51 | 7 | .0 | TDRS -41 | 235.9 | 25.1 | .4 | 183.6 | 87.5 | 288.7 | 327.3 | 333.2 | 324.9 | 270.1 | 60.0 | 182.3 | 359.2 | | 327.8 | 46.4 |
| | | | SBQANT IS UPPER LT | | | 24 SWITCH POS CHANGES | | | | | | | | | | | | | |
| 51 | 10 | .0 | TDRS -41 | 231.3 | 15.8 | -7.2 | 180.6 | 75.9 | 15.8 | 327.3 | 333.2 | 54.9 | 270.0 | 330.0 | 176.1 | 346.4 | | 310.0 | 337.2 |
| | | | SBQANT IS LOWER LT | | | 25 SWITCH POS CHANGES | | | | | | | | | | | | | |
| 51 | 13 | .0 | TDRS -41 | 230.8 | 6.3 | 13.4 | 180.4 | 64.3 | 105.5 | 327.3 | 333.2 | 144.9 | 89.9 | 300.0 | 155.1 | 6.6 | | 33.7 | 316.7 |
| | | | SBQANT IS LOWER RT | | | 26 SWITCH POS CHANGES | | | | | | | | | | | | | |

Table VI. Thermal Conditioning - Roll 0.5° per second, X-axis ⊥ sun simulation

REPRODUCIBILITY OF THE ORIGINAL PAGE IS POOR

SHUTTLE ATTITUDE AND POINTING TIME LINE

| GET HRS | GET MN | GET SECS | EVENT | VEHICLE POSITION ALT N MI | VEHICLE POSITION LAT DEG | VEHICLE POSITION LON DEG | LVLH ATTITUDE YAW DEG | LVLH ATTITUDE PITCH DEG | LVLH ATTITUDE ROLL DEG | ECI ATTITUDE YAW DEG | ECI ATTITUDE PITCH DEG | ECI ATTITUDE ROLL DEG | LOOK ANGLES TO SUN YAW DEG | LOOK ANGLES TO SUN PITCH DEG | LOOK ANGLES TO EARTH YAW DEG | LOOK ANGLES TO EARTH PITCH DEG | LOOK ANGLES TO TARGET TARG ID | LOOK ANGLES TO TARGET YAW DEG | LOOK ANGLES TO TARGET PITCH DEG |
|---|---|---|---|---|---|---|---|---|---|---|---|---|---|---|---|---|---|---|---|
| 51 | 15 | .0 | TDRS -41 | 230.1 | -.1 | 17.3 | 180.3 | 56.5 | 165.4 | 327.3 | 333.2 | 204.9 | 90.0 | 360.0 | 170.5 | 32.2 | | 51.9 | 1.2 |
| | | | SBQANT IS UPPER RT | | | 27 SWITCH POS CHANGES | | | | | | | | | | | | | |
| 51 | 18 | .0 | TDRS -41 | 230.4 | -9.6 | 23.3 | 180.2 | 44.9 | 255.3 | 327.3 | 333.2 | 294.9 | 39.4 | 89.9 | 224.1 | 10.3 | | 356.5 | 50.5 |
| | | | SBQANT IS UPPER LT | | | 28 SWITCH POS CHANGES | | | | | | | | | | | | | |
| 51 | 21 | .0 | TDRS -41 | 231.0 | -19.0 | 29.6 | 180.2 | 33.3 | 345.3 | 327.3 | 333.2 | 24.9 | 270.0 | .0 | 201.2 | 306.1 | | 311.0 | 357.1 |
| | | | SBQANT IS LOWER LT | | | 29 SWITCH POS CHANGES | | | | | | | | | | | | | |
| 51 | 24 | .0 | TDRS -41 | 232.1 | -28.1 | 36.8 | 180.2 | 21.7 | 75.2 | 327.3 | 333.2 | 114.9 | 321.7 | 270.1 | 112.4 | 346.3 | | 4.8 | 312.9 |
| | | | SBQANT IS LOWER RT | | | 30 SWITCH POS CHANGES | | | | | | | | | | | | | |
| 51 | 27 | .0 | TDRS -41 | 233.0 | -36.7 | 45.4 | 180.2 | 10.1 | 165.2 | 327.3 | 333.2 | 204.9 | 90.0 | 360.0 | 124.9 | 72.1 | | 45.4 | 3.2 |
| | | | SBQANT IS UPPER RT | | | 31 SWITCH POS CHANGES | | | | | | | | | | | | | |
| 51 | 30 | .0 | TDRS -41 | 233.3 | -44.3 | 56.1 | 180.2 | 358.5 | 255.1 | 327.3 | 333.2 | 294.9 | 37.5 | 89.9 | 271.6 | 14.9 | | 356.0 | 43.5 |
| | | | SBQANT IS UPPER LT | | | 32 SWITCH POS CHANGES | | | | | | | | | | | | | |

Table VI. (Continued)

SHUTTLE ATTITUDE AND POINTING TIME LINE

| GET HRS | GET MN | GET SECS | EVENT | VEHICLE POSITION ALT N MI | VEHICLE POSITION LAT DEG | VEHICLE POSITION LON DEG | LVLH ATTITUDE YAW DEG | LVLH ATTITUDE PITCH DEG | LVLH ATTITUDE ROLL DEG | ECI ATTITUDE YAW DEG | ECI ATTITUDE PITCH DEG | ECI ATTITUDE ROLL DEG | LOOK ANGLES TO SUN YAW DEG | LOOK ANGLES TO SUN PITCH DEG | LOOK ANGLES TO EARTH YAW DEG | LOOK ANGLES TO EARTH PITCH DEG | LOOK ANGLES TO TARGET TARG ID | LOOK ANGLES TO TARGET YAW DEG | LOOK ANGLES TO TARGET PITCH DEG |
|---|---|---|---|---|---|---|---|---|---|---|---|---|---|---|---|---|---|---|---|
| 49 | 59 | .0 | ASTRONOMY 520 | 233.8 | -48.7 | 88.8 | -.0 | 1.0 | 219.3 | 153.2 | 20.0 | 181.8 | 272.5 | 335.6 | 268.4 | 50.7 | | .0 | 90.0 |
| | | | SBQANT IS UPPER RT | | | 1 SWITCH POS CHANGES | | | | | | | | | | | | | |
| 50 | 45 | .0 | TDRS -41 | 236.4 | 47.6 | -105.5 | 179.9 | 1.2 | 39.2 | 153.2 | 20.0 | 181.8 | 272.4 | 335.5 | 91.9 | 309.3 | | 228.5 | 337.8 |
| | | | SBQANT IS LOWER LT | | | 2 SWITCH POS CHANGES | | | | | | | | | | | | | |

Table VII. Star Tracking - 520 Simulation

SHUTTLE ATTITUDE AND POINTING TIME LINE

| GET HRS | GET MN | GET SECS | EVENT | VEHICLE POSITION ALT N MI | VEHICLE POSITION LAT DEG | VEHICLE POSITION LON DEG | LVLH ATTITUDE YAW DEG | LVLH ATTITUDE PITCH DEG | LVLH ATTITUDE ROLL DEG | ECI ATTITUDE YAW DEG | ECI ATTITUDE PITCH DEG | ECI ATTITUDE ROLL DEG | LOOK ANGLES TO SUN YAW DEG | LOOK ANGLES TO SUN PITCH DEG | LOOK ANGLES TO EARTH YAW DEG | LOOK ANGLES TO EARTH PITCH DEG | LOOK ANGLES TO TARGET TARG ID | LOOK ANGLES TO TARGET YAW DEG | LOOK ANGLES TO TARGET PITCH DEG |
|---|---|---|---|---|---|---|---|---|---|---|---|---|---|---|---|---|---|---|---|
| 49 | 59 | .0 | ASTRONOMY 522 | 233.6 | -48.7 | 88.8 | -.0 | 328.5 | 310.6 | 172.4 | 353.6 | 275.5 | 70.5 | 300.7 | 308.9 | 326.3 | | .0 | 90.0 |
| | | | SBQANT IS UPPER RT | | | 1 SWITCH POS CHANGES | | | | | | | | | | | | | |
| 50 | 0 | .0 | TDRS -171 | 233.6 | -50.5 | 93.8 | .0 | 332.4 | 310.6 | 172.4 | 353.6 | 275.5 | 70.5 | 300.7 | 304.6 | 324.8 | | 355.9 | 25.4 |
| | | | SBQANT IS UPPER LT | | | 2 SWITCH POS CHANGES | | | | | | | | | | | | | |
| 50 | 24 | .0 | TDRS -171 | 234.1 | -14.1 | -159.8 | .2 | 65.2 | 310.8 | 172.4 | 353.6 | 275.5 | 70.5 | 300.7 | 199.3 | 344.1 | | .3 | 27.9 |
| | | | SBQANT IS UPPER RT | | | 3 SWITCH POS CHANGES | | | | | | | | | | | | | |
| 50 | 45 | .0 | TDRS -41 | 236.4 | 47.6 | -105.5 | 179.9 | 33.6 | 130.5 | 172.4 | 353.6 | 275.5 | 70.6 | 300.6 | 131.2 | 32.8 | | 159.9 | 297.8 |
| | | | SBQANT IS LOWER RT | | | 4 SWITCH POS CHANGES | | | | | | | | | | | | | |

Table VIII. Star Tracking - 522 Simulation

1.2-DN-B0203-001
Page 27

SHUTTLE ATTITUDE AND POINTING TIME LINE

| GET HRS | GET MN | GET SECS | EVENT | VEHICLE POSITION ALT N MI | VEHICLE POSITION LAT DEG | VEHICLE POSITION LON DEG | LVLH ATTITUDE YAW DEG | LVLH ATTITUDE PITCH DEG | LVLH ATTITUDE ROLL DEG | ECI ATTITUDE YAW DEG | ECI ATTITUDE PITCH DEG | ECI ATTITUDE ROLL DEG | LOOK ANGLES TO SUN YAW DEG | LOOK ANGLES TO SUN PITCH DEG | LOOK ANGLES TO EARTH YAW DEG | LOOK ANGLES TO EARTH PITCH DEG | LOOK ANGLES TO TARGET TARG ID | LOOK ANGLES TO TARGET YAW DEG | LOOK ANGLES TO TARGET PITCH DEG |
|---|---|---|---|---|---|---|---|---|---|---|---|---|---|---|---|---|---|---|---|
| 49 | 59 | .0 | ASTRONOMY 530 | 233.8 | -48.7 | 88.8 | -.0 | 298.7 | 148.0 | 191.7 | 329.9 | 106.6 | 287.5 | 35.7 | 16.1 | 24.0 | | .0 | 90.0 |
| | | | SBQANT IS UPPER RT | | | 1 SWITCH POS CHANGES | | | | | | | | | | | | | |
| 50 | 0 | .0 | TDRS -171 | 233.6 | -50.5 | 93.8 | .0 | 302.5 | 148.0 | 191.7 | 329.9 | 106.6 | 287.5 | 35.7 | 18.7 | 27.1 | | 357.4 | 311.9 |
| | | | SBQANT IS LOWER LT | | | 2 SWITCH POS CHANGES | | | | | | | | | | | | | |
| 50 | 45 | .0 | TDRS -41 | 236.4 | 47.6 | -105.5 | 179.8 | 63.5 | 327.9 | 191.7 | 329.9 | 106.6 | 287.5 | 35.7 | 194.8 | 337.8 | | 245.3 | 68.4 |
| | | | SBQANT IS UPPER LT | | | 3 SWITCH POS CHANGES | | | | | | | | | | | | | |

Table IX. Star Tracking - 530 Simulation

SHUTTLE ATTITUDE AND POINTING TIME LINE

| GET HRS | GET MIN | GET SECS | EVENT | VEHICLE POSITION ALT N MI | VEHICLE POSITION LAT DEG | VEHICLE POSITION LON DEG | LVLH ATTITUDE YAW DEG | LVLH ATTITUDE PITCH DEG | LVLH ATTITUDE ROLL DEG | LCI ATTITUDE YAW DEG | LCI ATTITUDE PITCH DEG | LCI ATTITUDE ROLL DEG | LOOK ANGLES TO SUN YAW DEG | LOOK ANGLES TO SUN PITCH DEG | LOOK ANGLES TO EARTH YAW DEG | LOOK ANGLES TO EARTH PITCH DEG | LOOK ANGLES TO TARGET TARG ID | LOOK ANGLES TO TARGET YAW DEG | LOOK ANGLES TO TARGET PITCH DEG |
|---|---|---|---|---|---|---|---|---|---|---|---|---|---|---|---|---|---|---|---|
| 50 | 0 | .0 | TDRS -171 | 233.6 | -60.5 | 93.8 | .0 | -.0 | -.0 | 156.3 | 16.1 | 323.4 | 86.4 | 345.4 | .0 | 270.0 | | 337.9 | 347.6 |
| | | | SUBANT IS LOWER LT | | | | 1 SWITCH POS CHANGES | | | | | | | | | | | | |
| 50 | 45 | .0 | TDRS -41 | 236.4 | 47.6 | -105.6 | 179.9 | 6.0 | 179.9 | 156.3 | 16.1 | 323.4 | 86.5 | 345.4 | 179.5 | 84.0 | | 127.6 | 348.5 |
| | | | SUBANT IS LOWER RT | | | | 2 SWITCH POS CHANGES | | | | | | | | | | | | |

Table X. Inertial Hold Simulation

SHUTTLE ATTITUDE AND POINTING TIME LINE

| GET HRS | GET MIN | GET SECS | EVENT | VEHICLE POSITION ALT N MI | VEHICLE POSITION LAT DEG | VEHICLE POSITION LON DEG | LVLH ATTITUDE YAW DEG | LVLH ATTITUDE PITCH DEG | LVLH ATTITUDE ROLL DEG | ECI ATTITUDE YAW DEG | ECI ATTITUDE PITCH DEG | ECI ATTITUDE ROLL DEG | LOOK ANGLES TO SUN YAW DEG | LOOK ANGLES TO SUN PITCH DEG | LOOK ANGLES TO EARTH YAW DEG | LOOK ANGLES TO EARTH PITCH DEG | LOOK ANGLES TO TARGET TARG ID | LOOK ANGLES TO TARGET YAW DEG | LOOK ANGLES TO TARGET PITCH DEG |
|---|---|---|---|---|---|---|---|---|---|---|---|---|---|---|---|---|---|---|---|
| 50 | 0 | .0 | TDRS -171 | 233.6 | -50.5 | 93.8 | .0 | -.0 | -.0 | 156.3 | 16.1 | 323.4 | 86.4 | 345.4 | .0 | 270.0 | | 337.9 | 347.6 |
| | | | SB4ANT IS LOWER LT | | | 1 SWITCH POS CHANGES | | | | | | | | | | | | | |
| 50 | 45 | .0 | TDRS -41 | 236.4 | 47.6 | -105.6 | 179.9 | 6.0 | 179.9 | 156.3 | 16.1 | 323.4 | 86.5 | 345.4 | 179.5 | 84.0 | | 127.6 | 348.5 |
| | | | SB4ANT IS LOWER RT | | | 2 SWITCH POS CHANGES | | | | | | | | | | | | | |
| 51 | 34 | .0 | TDRS -171 | 236.0 | -52.0 | 75.9 | .2 | 3.5 | 359.9 | 156.3 | 16.1 | 323.4 | 86.5 | 345.5 | 181.2 | 273.5 | | 356.7 | 333.6 |
| | | | SB4ANT IS LOWER LT | | | 3 SWITCH POS CHANGES | | | | | | | | | | | | | |

Table XI. Heads Down Simulation

REPRODUCIBILITY OF THE ORIGINAL PAGE IS POOR

1.2-DN-B0203-001
Page 30

SHUTTLE ATTITUDE AND POINTING TIME LINE

| GET HRS | GET MN | GET SECS | EVENT | VEHICLE POSITION ALT N MI | VEHICLE POSITION LAT DEG | VEHICLE POSITION LON DEG | LVLH ATTITUDE YAW DEG | LVLH ATTITUDE PITCH DEG | LVLH ATTITUDE ROLL DEG | ECI ATTITUDE YAW DEG | ECI ATTITUDE PITCH DEG | ECI ATTITUDE ROLL DEG | LOOK ANGLES TO SUN YAW DEG | LOOK ANGLES TO SUN PITCH DEG | LOOK ANGLES TO EARTH YAW DEG | LOOK ANGLES TO EARTH PITCH DEG | LOOK ANGLES TO TARGET TARG ID | LOOK ANGLES TO TARGET YAW DEG | LOOK ANGLES TO TARGET PITCH DEG |
|---|---|---|---|---|---|---|---|---|---|---|---|---|---|---|---|---|---|---|---|
| 50 | 0 | .1 | TORS -171 | 236.1 | -51.1 | 95.7 | .0 | .0 | .0 | 157.1 | 15.1 | 323.7 | 86.1 | 345.5 | .0 | 270.0 | | 337.9 | 348.8 |
| | | | SBWANT IS LOWER LT | | | 1 SWITCH POS CHANGES | | | | | | | | | | | | | |
| 50 | 5 | .1 | TORS -171 | 237.5 | -55.2 | 128.2 | .0 | .0 | .0 | 168.4 | 359.3 | 325.1 | 81.5 | 347.6 | .0 | 270.0 | | 338.1 | 5.9 |
| | | | SBWANT IS UPPER LT | | | 2 SWITCH POS CHANGES | | | | | | | | | | | | | |
| 50 | 45 | .0 | TORS -41 | 234.1 | 48.4 | -103.8 | -.0 | .0 | .0 | 333.2 | 340.2 | 217.4 | 92.2 | 14.7 | .0 | 270.0 | | 51.8 | 8.6 |
| | | | SBWANT IS UPPER RT | | | 3 SWITCH POS CHANGES | | | | | | | | | | | | | |
| 51 | 25 | .0 | TORS -41 | 232.8 | -32.1 | 40.6 | .0 | .0 | .0 | 133.8 | 38.6 | 312.9 | 94.5 | 345.9 | .0 | 270.0 | | 136.9 | 357.9 |
| | | | SBWANT IS LOWER RT | | | 4 SWITCH POS CHANGES | | | | | | | | | | | | | |
| 51 | 35 | .1 | TORS -171 | 237.0 | -53.7 | 83.3 | -.0 | .0 | .0 | 161.3 | 8.9 | 324.6 | 84.5 | 346.2 | .0 | 270.0 | | 357.3 | 341.9 |
| | | | SBWANT IS LOWER LT | | | 5 SWITCH POS CHANGES | | | | | | | | | | | | | |
| 51 | 40 | .1 | TORS -171 | 237.5 | -54.4 | 115.1 | -.0 | .0 | -.0 | 172.4 | 353.0 | 324.8 | 80.3 | 348.8 | .0 | 270.0 | | 358.4 | .1 |
| | | | SBWANT IS UPPER LT | | | 6 SWITCH POS CHANGES | | | | | | | | | | | | | |

Table XII. LVLH Simulation

SHUTTLE ATTITUDE AND POINTING TIME LINE

| GLT HRS | GLT MN | GLT SECS | EVENT | VEHICLE POSITION ALT N MI | VEHICLE POSITION LAT DEG | VEHICLE POSITION LON DEG | LVLH ATTITUDE YAW DEG | LVLH ATTITUDE PITCH DEG | LVLH ATTITUDE ROLL DEG | ECI ATTITUDE YAW DEG | ECI ATTITUDE PITCH DEG | ECI ATTITUDE ROLL DEG | LOOK ANGLES TO SUN YAW DEG | LOOK ANGLES TO SUN PITCH DEG | LOOK ANGLES TO EARTH YAW DEG | LOOK ANGLES TO EARTH PITCH DEG | LOOK ANGLES TO TARGET TARG ID | LOOK ANGLES TO TARGET YAW DEG | LOOK ANGLES TO TARGET PITCH DEG |
|---|---|---|---|---|---|---|---|---|---|---|---|---|---|---|---|---|---|---|---|
| 50 | 0 | .0 | TDRS -171 | 233.6 | -50.5 | 93.8 | .0 | -.0 | -.0 | 156.3 | 16.1 | 323.4 | 86.4 | 345.4 | .0 | 270.0 | | 337.9 | 347.6 |
| | | | SBWANT IS LOWER LT | | | 1 SWITCH POS CHANGES | | | | | | | | | | | | | |
| 50 | 0 | 30.0 | TDRS -171 | 233.5 | -51.3 | 96.5 | .0 | 1.9 | 60.0 | 156.3 | 16.1 | 23.4 | 85.1 | 45.3 | 92.2 | 330.0 | | .2 | 334.7 |
| | | | SBWANT IS LOWER RT | | | 2 SWITCH POS CHANGES | | | | | | | | | | | | | |
| 50 | 1 | 30.0 | TDRS -171 | 236.6 | -52.8 | 102.1 | .0 | 5.8 | 180.0 | 156.3 | 16.1 | 143.4 | 273.6 | 14.6 | 180.0 | 84.2 | | 22.2 | 12.7 |
| | | | SBWANT IS UPPER RT | | | 3 SWITCH POS CHANGES | | | | | | | | | | | | | |
| 50 | 2 | .0 | TDRS -171 | 236.7 | -53.4 | 105.0 | .0 | 7.8 | 240.0 | 156.3 | 16.1 | 203.4 | 274.9 | 314.7 | 261.1 | 29.7 | | 359.5 | 25.5 |
| | | | SBWANT IS UPPER LT | | | 4 SWITCH POS CHANGES | | | | | | | | | | | | | |
| 50 | 3 | .0 | TDRS -171 | 236.9 | -54.3 | 111.1 | .0 | 11.6 | .0 | 156.3 | 16.1 | 323.4 | 86.4 | 345.4 | 180.0 | 281.6 | | 337.7 | 347.0 |
| | | | SBWANT IS LOWER LT | | | 5 SWITCH POS CHANGES | | | | | | | | | | | | | |
| 50 | 3 | 30.0 | TDRS -171 | 237.0 | -54.7 | 114.2 | .0 | 13.5 | 60.0 | 156.3 | 16.1 | 23.4 | 85.1 | 45.3 | 105.5 | 330.9 | | .7 | 334.3 |
| | | | SBWANT IS LOWER RT | | | 6 SWITCH POS CHANGES | | | | | | | | | | | | | |
| 50 | 4 | 30.0 | TDRS -171 | 237.1 | -55.1 | 120.6 | .0 | 17.4 | 180.0 | 156.3 | 16.1 | 143.4 | 273.6 | 14.6 | 180.0 | 72.6 | | 22.3 | 13.2 |
| | | | SBWANT IS UPPER RT | | | 7 SWITCH POS CHANGES | | | | | | | | | | | | | |
| 50 | 5 | .0 | TDRS -171 | 237.2 | -55.2 | 123.8 | .0 | 19.3 | 240.0 | 156.3 | 16.1 | 203.4 | 274.9 | 314.7 | 247.9 | 28.1 | | 359.1 | 25.8 |
| | | | SBWANT IS UPPER LT | | | 8 SWITCH POS CHANGES | | | | | | | | | | | | | |
| 50 | 6 | .0 | TDRS -171 | 237.2 | -55.1 | 130.3 | .0 | 23.2 | .0 | 156.3 | 16.1 | 323.4 | 86.4 | 345.4 | 180.0 | 293.2 | | 337.6 | 346.7 |
| | | | SBWANT IS LOWER LT | | | 9 SWITCH POS CHANGES | | | | | | | | | | | | | |
| 50 | 6 | 30.0 | TDRS -171 | 237.2 | -54.9 | 133.5 | .0 | 25.1 | 60.0 | 156.3 | 16.1 | 23.4 | 85.1 | 45.3 | 118.4 | 333.1 | | .9 | 334.1 |
| | | | SBWANT IS LOWER RT | | | 10 SWITCH POS CHANGES | | | | | | | | | | | | | |
| 50 | 7 | 30.0 | TDRS -171 | 237.2 | -54.2 | 139.8 | .0 | 29.0 | 180.0 | 156.3 | 16.1 | 143.4 | 273.6 | 14.6 | 180.0 | 61.0 | | 22.4 | 13.4 |
| | | | SBWANT IS UPPER RT | | | 11 SWITCH POS CHANGES | | | | | | | | | | | | | |
| 50 | 8 | .0 | TDRS -171 | 237.2 | -53.8 | 142.9 | .0 | 31.0 | 240.0 | 156.3 | 16.1 | 203.4 | 274.9 | 314.7 | 235.3 | 25.4 | | 359.1 | 25.9 |
| | | | SBWANT IS UPPER LT | | | 12 SWITCH POS CHANGES | | | | | | | | | | | | | |
| 50 | 9 | .0 | TDRS -171 | 237.2 | -52.6 | 148.8 | .1 | 34.8 | .0 | 156.3 | 16.1 | 323.4 | 86.4 | 345.4 | 180.0 | 304.8 | | 337.6 | 346.7 |
| | | | SBWANT IS LOWER LT | | | 13 SWITCH POS CHANGES | | | | | | | | | | | | | |
| 50 | 9 | 30.0 | TDRS -171 | 237.2 | -51.9 | 151.6 | .1 | 36.7 | 60.0 | 156.3 | 16.1 | 23.4 | 85.1 | 45.3 | 130.8 | 336.4 | | .8 | 334.2 |
| | | | SBWANT IS LOWER RT | | | 14 SWITCH POS CHANGES | | | | | | | | | | | | | |
| 50 | 10 | 30.0 | TDRS -171 | 237.2 | -50.3 | 156.9 | .1 | 40.6 | 180.0 | 156.3 | 16.1 | 143.4 | 273.6 | 14.6 | 180.0 | 49.4 | | 22.4 | 13.1 |
| | | | SBWANT IS UPPER RT | | | 15 SWITCH POS CHANGES | | | | | | | | | | | | | |
| 50 | 11 | .0 | TDRS -171 | 237.1 | -49.4 | 159.4 | .1 | 42.5 | 240.0 | 156.3 | 16.1 | 203.4 | 274.9 | 314.7 | 223.4 | 21.6 | | 359.4 | 25.7 |
| | | | SBWANT IS UPPER LT | | | 16 SWITCH POS CHANGES | | | | | | | | | | | | | |

Table XIII. ECI Roll of 2° Second Simulation

REPRODUCIBILITY OF THE ORIGINAL PAGE IS POOR

SHUTTLE ATTITUDE AND POINTING TIME LINE

| GET HRS | GET MN | GET SECS | EVENT | VEHICLE POSITION ALT N MI | VEHICLE POSITION LAT DEG | VEHICLE POSITION LON DEG | LVLH ATTITUDE YAW DEG | LVLH ATTITUDE PITCH DEG | LVLH ATTITUDE ROLL DEG | ECI ATTITUDE YAW DEG | ECI ATTITUDE PITCH DEG | ECI ATTITUDE ROLL DEG | LOOK ANGLES TO SUN YAW DEG | LOOK ANGLES TO SUN PITCH DEG | LOOK ANGLES TO EARTH YAW DEG | LOOK ANGLES TO EARTH PITCH DEG | TARG ID | LOOK ANGLES TO TARGET YAW DEG | LOOK ANGLES TO TARGET PITCH DEG |
|---|---|---|---|---|---|---|---|---|---|---|---|---|---|---|---|---|---|---|---|
| 50 | 12 | .0 | TDRS -171 | 237.0 | -47.4 | 164.1 | .1 | 46.4 | .0 | 156.3 | 16.1 | 323.4 | 86.4 | 345.4 | 180.0 | 316.4 | | 337.6 | 347.2 |
| | | | SBWANT IS LOWER LT | | | 17 SWITCH POS CHANGES | | | | | | | | | | | | | |
| 50 | 12 | 30.0 | TDRS -171 | 236.9 | -46.4 | 166.4 | .1 | 48.3 | 60.0 | 156.3 | 16.1 | 23.4 | 85.1 | 45.3 | 142.4 | 340.6 | | .3 | 334.4 |
| | | | SBWANT IS LOWER RT | | | 18 SWITCH POS CHANGES | | | | | | | | | | | | | |
| 50 | 13 | 30.0 | TDRS -171 | 235.9 | -44.1 | 170.6 | .1 | 52.2 | 180.0 | 156.3 | 16.1 | 143.4 | 273.6 | 14.6 | 180.0 | 37.8 | | 22.3 | 12.5 |
| | | | SBWANT IS UPPER RT | | | 19 SWITCH POS CHANGES | | | | | | | | | | | | | |
| 50 | 14 | 30.0 | TDRS -171 | 236.0 | -41.7 | 174.4 | .1 | 56.1 | 300.1 | 156.3 | 16.1 | 263.4 | 77.2 | 285.8 | 210.2 | 343.8 | | 337.9 | 12.4 |
| | | | SBWANT IS UPPER LT | | | 20 SWITCH POS CHANGES | | | | | | | | | | | | | |
| 50 | 15 | .0 | TDRS -171 | 235.9 | -40.4 | 176.2 | .1 | 58.0 | .1 | 156.3 | 16.1 | 323.4 | 86.4 | 345.4 | 180.0 | 328.0 | | 337.8 | 348.0 |
| | | | SBWANT IS LOWER LT | | | 21 SWITCH POS CHANGES | | | | | | | | | | | | | |
| 50 | 16 | .0 | TDRS -171 | 235.9 | -37.8 | 179.6 | .1 | 61.9 | 120.1 | 156.3 | 16.1 | 83.4 | 282.8 | 74.2 | 155.2 | 13.7 | | 21.6 | 347.4 |
| | | | SBWANT IS LOWER RT | | | 22 SWITCH POS CHANGES | | | | | | | | | | | | | |
| 50 | 16 | 30.0 | TDRS -171 | 235.9 | -36.5 | -178.7 | .1 | 63.8 | 180.1 | 156.3 | 16.1 | 143.4 | 273.6 | 14.6 | 180.0 | 26.2 | | 22.1 | 11.5 |
| | | | SBWANT IS UPPER RT | | | 23 SWITCH POS CHANGES | | | | | | | | | | | | | |
| 50 | 17 | 30.0 | TDRS -171 | 235.9 | -33.7 | -175.7 | .2 | 67.6 | 300.1 | 156.3 | 16.1 | 263.4 | 77.2 | 285.8 | 199.6 | 349.0 | | 339.0 | 12.8 |
| | | | SBWANT IS UPPER LT | | | 24 SWITCH POS CHANGES | | | | | | | | | | | | | |
| 50 | 18 | .0 | TDRS -171 | 235.9 | -32.3 | -174.3 | .2 | 69.6 | .1 | 156.3 | 16.1 | 323.4 | 86.4 | 345.4 | 179.9 | 339.6 | | 338.1 | 349.1 |
| | | | SBWANT IS LOWER LT | | | 25 SWITCH POS CHANGES | | | | | | | | | | | | | |
| 50 | 19 | .0 | TDRS -171 | 235.8 | -29.4 | -171.5 | .2 | 73.4 | 120.2 | 156.3 | 16.1 | 83.4 | 282.8 | 74.2 | 165.6 | 8.2 | | 20.4 | 347.0 |
| | | | SBWANT IS LOWER RT | | | 26 SWITCH POS CHANGES | | | | | | | | | | | | | |
| 50 | 19 | 30.0 | TDRS -171 | 233.7 | -27.9 | -170.2 | .3 | 75.4 | 180.2 | 156.3 | 16.1 | 143.4 | 273.6 | 14.6 | 180.1 | 14.6 | | 21.7 | 10.2 |
| | | | SBWANT IS UPPER RT | | | 27 SWITCH POS CHANGES | | | | | | | | | | | | | |
| 50 | 20 | 30.0 | TDRS -171 | 233.8 | -24.9 | -167.7 | .4 | 79.3 | 300.3 | 156.3 | 16.1 | 263.4 | 77.2 | 285.8 | 189.3 | 354.6 | | 340.4 | 13.2 |
| | | | SBWANT IS UPPER LT | | | 28 SWITCH POS CHANGES | | | | | | | | | | | | | |
| 50 | 21 | .0 | TDRS -171 | 233.8 | -23.4 | -166.5 | .5 | 81.2 | .4 | 156.3 | 16.1 | 323.4 | 86.4 | 345.4 | 179.9 | 351.2 | | 338.6 | 350.6 |
| | | | SBWANT IS LOWER LT | | | 29 SWITCH POS CHANGES | | | | | | | | | | | | | |
| 50 | 22 | .0 | TDRS -171 | 233.9 | -20.3 | -164.2 | .8 | 85.1 | 120.8 | 156.3 | 16.1 | 83.4 | 282.7 | 74.2 | 175.8 | -2.5 | | 18.8 | 346.6 |
| | | | SBWANT IS LOWER RT | | | 30 SWITCH POS CHANGES | | | | | | | | | | | | | |
| 50 | 22 | 30.0 | TDRS -171 | 234.0 | -16.8 | -163.1 | 1.3 | 87.0 | 181.3 | 156.3 | 16.1 | 143.4 | 273.6 | 14.6 | 180.1 | 3.0 | | 21.1 | 8.7 |
| | | | SBWANT IS UPPER RT | | | 31 SWITCH POS CHANGES | | | | | | | | | | | | | |
| 50 | 23 | 30.0 | TDRS -171 | 234.1 | -15.7 | -160.9 | 175.4 | 89.1 | 115.3 | 156.3 | 16.1 | 263.4 | 77.3 | 285.8 | 179.2 | .4 | | 342.1 | 13.6 |
| | | | SBWANT IS UPPER LT | | | 32 SWITCH POS CHANGES | | | | | | | | | | | | | |
| 50 | 24 | .0 | TDRS -171 | 234.1 | -14.1 | -159.8 | 178.6 | 87.2 | 178.5 | 156.3 | 16.1 | 323.4 | 86.4 | 345.4 | 179.9 | 2.8 | | 339.2 | 352.1 |
| | | | SBWANT IS LOWER LT | | | 33 SWITCH POS CHANGES | | | | | | | | | | | | | |

Table XIII (Continued)

SHUTTLE ATTITUDE AND POINTING TIME LINE

| GET HRS | GET MN | GET SECS | EVENT | VEHICLE POSITION ALT N MI | VEHICLE POSITION LAT DEG | VEHICLE POSITION LON DEG | LVLH ATTITUDE YAW DEG | LVLH ATTITUDE PITCH DEG | LVLH ATTITUDE ROLL DEG | ECI ATTITUDE YAW DEG | ECI ATTITUDE PITCH DEG | ECI ATTITUDE ROLL DEG | LOOK ANGLES TO SUN YAW DEG | LOOK ANGLES TO SUN PITCH DEG | LOOK ANGLES TO EARTH YAW DEG | LOOK ANGLES TO EARTH PITCH DEG | LOOK ANGLES TO TARGET TARG ID | LOOK ANGLES TO TARGET YAW DEG | LOOK ANGLES TO TARGET PITCH DEG |
|---|---|---|---|---|---|---|---|---|---|---|---|---|---|---|---|---|---|---|---|
| 50 | 25 | .0 | TDRS -171 | 234.3 | -11.0 | -157.8 | 179.4 | 83.3 | 299.3 | 156.3 | 16.1 | 83.4 | 282.7 | 74.2 | 185.8 | 356.7 | | 17.0 | 346.3 |
| | | | SBWANT IS LOWER RT | | | 34 SWITCH POS CHANGES | | | | | | | | | | | | | |
| 50 | 25 | 30.0 | TDRS -171 | 232.0 | -9.4 | -156.7 | 179.5 | 81.4 | 359.5 | 156.3 | 16.1 | 143.4 | 273.6 | 14.6 | 180.1 | 351.4 | | 20.4 | 7.0 |
| | | | SBWANT IS UPPER RT | | | 35 SWITCH POS CHANGES | | | | | | | | | | | | | |
| 50 | 26 | 30.0 | TDRS -171 | 232.1 | -6.2 | -154.7 | 179.7 | 77.5 | 119.6 | 156.3 | 16.1 | 263.4 | 77.3 | 285.8 | 169.1 | 6.1 | | 343.9 | 13.8 |
| | | | SBWANT IS UPPER LT | | | 36 SWITCH POS CHANGES | | | | | | | | | | | | | |
| 50 | 27 | .0 | TDRS -171 | 232.1 | -4.6 | -153.7 | 179.7 | 75.6 | 179.7 | 156.3 | 16.1 | 323.4 | 86.4 | 345.4 | 179.9 | 14.4 | | 340.0 | 353.8 |
| | | | SBWANT IS LOWER LT | | | 37 SWITCH POS CHANGES | | | | | | | | | | | | | |
| 50 | 28 | .0 | TDRS -171 | 232.2 | -1.4 | -151.8 | 179.8 | 71.7 | 299.7 | 156.3 | 16.1 | 83.4 | 282.7 | 74.2 | 196.0 | 351.1 | | 15.1 | 346.1 |
| | | | SBWANT IS LOWER RT | | | 38 SWITCH POS CHANGES | | | | | | | | | | | | | |
| 50 | 28 | 30.0 | TDRS -171 | 232.3 | .2 | -150.8 | 179.8 | 69.8 | 359.7 | 156.3 | 16.1 | 143.4 | 273.6 | 14.6 | 180.1 | 339.8 | | 19.5 | 5.4 |
| | | | SBWANT IS UPPER RT | | | 39 SWITCH POS CHANGES | | | | | | | | | | | | | |
| 50 | 29 | 30.0 | TDRS -171 | 232.4 | 3.4 | -148.8 | 179.8 | 65.9 | 119.8 | 156.3 | 16.1 | 263.4 | 77.3 | 285.8 | 158.8 | 11.7 | | 345.8 | 13.9 |
| | | | SBWANT IS UPPER LT | | | 40 SWITCH POS CHANGES | | | | | | | | | | | | | |
| 50 | 30 | .0 | TDRS -171 | 232.5 | 5.0 | -147.9 | 179.8 | 64.0 | 179.8 | 156.3 | 16.1 | 323.4 | 86.4 | 345.4 | 179.9 | 26.0 | | 341.0 | 356.3 |
| | | | SBWANT IS LOWER LT | | | 41 SWITCH POS CHANGES | | | | | | | | | | | | | |
| 50 | 31 | .0 | TDRS -171 | 232.7 | 6.1 | -145.9 | 179.9 | 60.1 | 299.8 | 156.3 | 16.1 | 83.4 | 282.7 | 74.2 | 206.5 | 345.7 | | 13.3 | 346.1 |
| | | | SBWANT IS LOWER RT | | | 42 SWITCH POS CHANGES | | | | | | | | | | | | | |
| 50 | 31 | 30.0 | TDRS -171 | 232.0 | 9.7 | -144.6 | 179.9 | 58.2 | 359.8 | 156.3 | 16.1 | 143.4 | 273.5 | 14.6 | 180.1 | 328.2 | | 18.5 | 3.9 |
| | | | SBWANT IS UPPER RT | | | 43 SWITCH POS CHANGES | | | | | | | | | | | | | |
| 50 | 32 | 30.0 | TDRS -171 | 232.2 | 12.9 | -142.8 | 179.9 | 54.3 | 119.8 | 156.3 | 16.1 | 263.4 | 77.3 | 285.8 | 148.1 | 16.9 | | 347.6 | 13.8 |
| | | | SBWANT IS UPPER LT | | | 44 SWITCH POS CHANGES | | | | | | | | | | | | | |
| 50 | 33 | .0 | TDRS -171 | 232.3 | 14.5 | -141.8 | 179.9 | 52.4 | 179.8 | 156.3 | 16.1 | 323.4 | 86.5 | 345.4 | 179.9 | 37.6 | | 342.0 | 356.7 |
| | | | SBWANT IS LOWER LT | | | 45 SWITCH POS CHANGES | | | | | | | | | | | | | |
| 50 | 34 | .0 | TDRS -171 | 232.4 | 17.6 | -139.6 | 179.9 | 48.6 | 299.9 | 156.3 | 16.1 | 83.4 | 282.7 | 74.2 | 217.5 | 340.7 | | 11.6 | 346.3 |
| | | | SBWANT IS LOWER RT | | | 46 SWITCH POS CHANGES | | | | | | | | | | | | | |
| 50 | 34 | 30.0 | TDRS -171 | 232.5 | 19.1 | -138.5 | 179.9 | 46.6 | 359.9 | 156.3 | 16.1 | 143.4 | 273.5 | 14.6 | 180.1 | 316.6 | | 17.4 | 2.7 |
| | | | SBWANT IS UPPER RT | | | 47 SWITCH POS CHANGES | | | | | | | | | | | | | |
| 50 | 35 | 30.0 | TDRS -171 | 232.6 | 22.2 | -136.2 | 179.9 | 42.7 | 119.9 | 156.3 | 16.1 | 263.4 | 77.3 | 285.8 | 136.8 | 21.5 | | 349.2 | 13.5 |
| | | | SBWANT IS UPPER LT | | | 48 SWITCH POS CHANGES | | | | | | | | | | | | | |
| 50 | 36 | .0 | TDRS -171 | 232.7 | 23.7 | -135.1 | 179.9 | 40.8 | 179.9 | 156.3 | 16.1 | 323.4 | 86.5 | 345.4 | 179.9 | 49.2 | | 343.1 | 357.8 |
| | | | SBWANT IS LOWER LT | | | 49 SWITCH POS CHANGES | | | | | | | | | | | | | |

Table XIII. (Continued)

REPRODUCIBILITY OF THE ORIGINAL PAGE IS POOR

SHUTTLE ATTITUDE AND POINTING TIME LINE

| GET HRS | GET MN | GET SECS | EVENT | VEHICLE POSITION ALT N MI | VEHICLE POSITION LAT DEG | VEHICLE POSITION LON DEG | LVLH ATTITUDE YAW DEG | LVLH ATTITUDE PITCH DEG | LVLH ATTITUDE ROLL DEG | ECI ATTITUDE YAW DEG | ECI ATTITUDE PITCH DEG | ECI ATTITUDE ROLL DEG | LOOK ANGLES TO SUN YAW DEG | LOOK ANGLES TO SUN PITCH DEG | LOOK ANGLES TO EARTH YAW DEG | LOOK ANGLES TO EARTH PITCH DEG | LOOK ANGLES TO TARGET TARG ID | LOOK ANGLES TO TARGET YAW DEG | LOOK ANGLES TO TARGET PITCH DEG |
|---|---|---|---|---|---|---|---|---|---|---|---|---|---|---|---|---|---|---|---|
| 50 | 37 | .0 | TDRS -171 | 232.8 | 26.7 | -132.6 | 179.9 | 36.9 | 299.9 | 156.3 | 16.1 | 83.4 | 282.7 | 74.2 | 229.1 | 336.5 | | 10.1 | 346.8 |
| | | | SBWANT IS LOWER RT | | 50 SWITCH POS CHANGES | | | | | | | | | | | | | | |
| 50 | 37 | 30.0 | TDRS -171 | 233.8 | 28.2 | -131.3 | 179.9 | 35.0 | 359.9 | 156.3 | 16.1 | 143.4 | 273.5 | 14.6 | 180.2 | 305.0 | | 16.3 | 1.8 |
| | | | SBWANT IS UPPER RT | | 51 SWITCH POS CHANGES | | | | | | | | | | | | | | |
| 50 | 38 | 30.0 | TDRS -171 | 233.7 | 31.1 | -128.7 | 179.9 | 31.1 | 119.9 | 156.3 | 16.1 | 263.4 | 77.3 | 285.8 | 124.9 | 25.3 | | 350.5 | 12.9 |
| | | | SBWANT IS UPPER LT | | 52 SWITCH POS CHANGES | | | | | | | | | | | | | | |
| 50 | 39 | .0 | TDRS -171 | 233.6 | 32.6 | -127.3 | 179.9 | 29.2 | 179.9 | 156.3 | 16.1 | 323.4 | 86.5 | 345.4 | 179.8 | 60.8 | | 344.3 | 358.5 |
| | | | SBWANT IS LOWER LT | | 53 SWITCH POS CHANGES | | | | | | | | | | | | | | |
| 50 | 40 | .0 | TDRS -171 | 233.5 | 35.4 | -124.3 | 179.9 | 25.4 | 299.9 | 156.3 | 16.1 | 83.4 | 282.7 | 74.2 | 241.3 | 333.2 | | 9.0 | 347.4 |
| | | | SBWANT IS LOWER RT | | 54 SWITCH POS CHANGES | | | | | | | | | | | | | | |
| 50 | 40 | 30.0 | TDRS -171 | 233.4 | 36.7 | -122.8 | 179.9 | 23.4 | 359.9 | 156.3 | 16.1 | 143.4 | 273.5 | 14.6 | 180.2 | 293.4 | | 15.2 | 1.3 |
| | | | SBWANT IS UPPER RT | | 55 SWITCH POS CHANGES | | | | | | | | | | | | | | |
| 50 | 41 | 30.0 | TDRS -171 | 233.3 | 39.4 | -119.5 | 179.9 | 19.6 | 119.9 | 156.3 | 16.1 | 263.4 | 77.3 | 285.8 | 112.3 | 28.0 | | 351.4 | 12.2 |
| | | | SBWANT IS UPPER LT | | 56 SWITCH POS CHANGES | | | | | | | | | | | | | | |
| 50 | 42 | .0 | TDRS -171 | 233.2 | 40.7 | -117.7 | 179.9 | 17.6 | 179.9 | 156.3 | 16.1 | 323.4 | 86.5 | 345.4 | 179.8 | 72.4 | | 345.4 | 358.8 |
| | | | SBWANT IS LOWER LT | | 57 SWITCH POS CHANGES | | | | | | | | | | | | | | |
| 50 | 43 | .0 | TDRS -171 | 232.9 | 43.2 | -114.0 | 179.9 | 13.8 | 299.9 | 156.3 | 16.1 | 83.4 | 282.7 | 74.2 | 254.2 | 331.0 | | 8.2 | 348.3 |
| | | | SBWANT IS LOWER RT | | 58 SWITCH POS CHANGES | | | | | | | | | | | | | | |
| 50 | 43 | 30.0 | TDRS -171 | 236.3 | 44.3 | -112.0 | 179.9 | 11.8 | 359.9 | 156.3 | 16.1 | 143.4 | 273.5 | 14.6 | 180.3 | 281.8 | | 14.1 | 1.1 |
| | | | SBWANT IS UPPER RT | | 59 SWITCH POS CHANGES | | | | | | | | | | | | | | |
| 50 | 44 | 30.0 | TDRS -171 | 236.4 | 46.6 | -107.8 | 179.9 | 8.0 | 119.9 | 156.3 | 16.1 | 263.4 | 77.3 | 285.8 | 99.2 | 29.6 | | 352.0 | 11.3 |
| | | | SBWANT IS UPPER LT | | 60 SWITCH POS CHANGES | | | | | | | | | | | | | | |
| 50 | 45 | .0 | TDRS -41 | 236.4 | 47.6 | -105.5 | 179.9 | 6.0 | 179.9 | 156.3 | 16.1 | 323.4 | 86.5 | 345.4 | 179.5 | 84.0 | | 127.6 | 348.5 |
| | | | SBWANT IS LOWER RT | | 61 SWITCH POS CHANGES | | | | | | | | | | | | | | |
| 50 | 45 | 30.0 | TDRS -41 | 236.4 | 48.6 | -103.2 | 179.9 | 4.1 | 239.9 | 156.3 | 16.1 | 23.4 | 85.1 | 45.3 | 265.3 | 30.0 | | 136.8 | 35.1 |
| | | | SBWANT IS UPPER RT | | 62 SWITCH POS CHANGES | | | | | | | | | | | | | | |
| 50 | 46 | .0 | TDRS -41 | 236.4 | 49.6 | -100.7 | 179.9 | 2.2 | 300.0 | 156.3 | 16.1 | 83.4 | 282.7 | 74.2 | 267.5 | 330.1 | | 200.2 | 50.7 |
| | | | SBWANT IS UPPER LT | | 63 SWITCH POS CHANGES | | | | | | | | | | | | | | |
| 50 | 47 | .0 | TDRS -41 | 236.4 | 51.3 | -95.6 | 179.9 | 358.3 | 60.0 | 156.3 | 16.1 | 203.4 | 274.9 | 314.7 | 88.1 | 330.0 | | 223.5 | 324.5 |
| | | | SBWANT IS LOWER LT | | 64 SWITCH POS CHANGES | | | | | | | | | | | | | | |
| 50 | 47 | 30.0 | TDRS -41 | 236.4 | 52.0 | -92.8 | 179.9 | 356.4 | 120.0 | 156.3 | 16.1 | 263.4 | 77.3 | 285.8 | 85.8 | 29.9 | | 159.2 | 309.0 |
| | | | SBWANT IS LOWER RT | | 65 SWITCH POS CHANGES | | | | | | | | | | | | | | |
| 50 | 48 | 30.0 | TDRS -41 | 236.2 | 53.3 | -87.1 | 179.9 | 352.5 | 240.0 | 156.3 | 16.1 | 23.4 | 85.1 | 45.3 | 278.6 | 29.7 | | 136.1 | 35.8 |
| | | | SBWANT IS UPPER RT | | 66 SWITCH POS CHANGES | | | | | | | | | | | | | | |

Table XIII. (Continued)

SHUTTLE ATTITUDE AND POINTING TIME LINE

| GET HRS | GET MN | GET SECS | EVENT | VEHICLE POSITION ALT N MI | VEHICLE POSITION LAT DEG | VEHICLE POSITION LON DEG | LVLH ATTITUDE YAW DEG | LVLH ATTITUDE PITCH DEG | LVLH ATTITUDE ROLL DEG | ECI ATTITUDE YAW DEG | ECI ATTITUDE PITCH DEG | ECI ATTITUDE ROLL DEG | LOOK ANGLES TO SUN YAW DEG | LOOK ANGLES TO SUN PITCH DEG | LOOK ANGLES TO EARTH YAW DEG | LOOK ANGLES TO EARTH PITCH DEG | LOOK ANGLES TO TARGET TARG ID | LOOK ANGLES TO TARGET YAW DEG | LOOK ANGLES TO TARGET PITCH DEG |
|---|---|---|---|---|---|---|---|---|---|---|---|---|---|---|---|---|---|---|---|
| 50 | 49 | .0 | TDRS -41 | 236.2 | 53.9 | -84.1 | 179.9 | 350.6 | 300.0 | 156.3 | 16.1 | 83.4 | 282.7 | 74.2 | 280.8 | 330.5 | | 201.2 | 51.4 |
| | | | SBWANT IS UPPER LT | | | 67 SWITCH POS CHANGES | | | | | | | | | | | | | |
| 50 | 50 | .0 | TDRS -41 | 237.8 | 54.7 | -77.9 | 179.9 | 346.7 | 60.0 | 156.3 | 16.1 | 203.4 | 274.9 | 314.7 | 74.7 | 330.9 | | 224.4 | 324.0 |
| | | | SBWANT IS LOWER LT | | | 68 SWITCH POS CHANGES | | | | | | | | | | | | | |
| 50 | 50 | 30.0 | TDRS -41 | 237.7 | 54.9 | -74.7 | 179.9 | 344.8 | 120.0 | 156.3 | 16.1 | 263.4 | 77.3 | 285.8 | 72.5 | 28.8 | | 158.5 | 308.2 |
| | | | SBWANT IS LOWER RT | | | 69 SWITCH POS CHANGES | | | | | | | | | | | | | |
| 50 | 51 | 30.0 | TDRS -41 | 237.6 | 55.2 | -68.3 | 179.9 | 340.9 | 240.0 | 156.3 | 16.1 | 23.4 | 85.1 | 45.3 | 291.8 | 28.2 | | 135.0 | 36.2 |
| | | | SBWANT IS UPPER RT | | | 70 SWITCH POS CHANGES | | | | | | | | | | | | | |
| 50 | 52 | .0 | TDRS -41 | 237.5 | 55.2 | -65.0 | 179.9 | 339.0 | 300.0 | 156.3 | 16.1 | 83.4 | 282.7 | 74.2 | 293.9 | 332.2 | | 201.6 | 52.3 |
| | | | SBWANT IS UPPER LT | | | 71 SWITCH POS CHANGES | | | | | | | | | | | | | |
| 50 | 53 | .0 | TDRS -41 | 237.2 | 54.9 | -58.6 | 179.8 | 335.1 | 60.0 | 156.3 | 16.1 | 203.4 | 274.9 | 314.7 | 61.8 | 333.0 | | 225.6 | 323.8 |
| | | | SBWANT IS LOWER LT | | | 72 SWITCH POS CHANGES | | | | | | | | | | | | | |
| 50 | 53 | 30.0 | TDRS -41 | 237.1 | 54.6 | -55.4 | 179.8 | 333.2 | 120.0 | 156.3 | 16.1 | 263.4 | 77.3 | 285.8 | 59.7 | 26.5 | | 158.4 | 307.2 |
| | | | SBWANT IS LOWER RT | | | 73 SWITCH POS CHANGES | | | | | | | | | | | | | |
| 50 | 54 | 30.0 | TDRS -41 | 236.8 | 53.8 | -49.2 | 179.8 | 329.3 | 240.0 | 156.3 | 16.1 | 23.4 | 85.1 | 45.3 | 304.4 | 25.4 | | 133.8 | 36.2 |
| | | | SBWANT IS UPPER RT | | | 74 SWITCH POS CHANGES | | | | | | | | | | | | | |
| 50 | 55 | .0 | TDRS -41 | 236.6 | 53.3 | -46.2 | 179.8 | 327.4 | 300.0 | 156.3 | 16.1 | 83.4 | 282.7 | 74.2 | 306.5 | 335.1 | | 201.5 | 53.3 |
| | | | SBWANT IS UPPER LT | | | 75 SWITCH POS CHANGES | | | | | | | | | | | | | |
| 50 | 56 | .0 | TDRS -41 | 237.0 | 52.3 | -40.5 | 179.8 | 323.5 | 60.1 | 156.3 | 16.1 | 203.4 | 274.9 | 314.7 | 49.5 | 336.3 | | 226.9 | 323.9 |
| | | | SBWANT IS LOWER LT | | | 76 SWITCH POS CHANGES | | | | | | | | | | | | | |
| 50 | 56 | 30.0 | TDRS -41 | 236.8 | 51.2 | -37.8 | 179.8 | 321.6 | 120.1 | 156.3 | 16.1 | 263.4 | 77.3 | 285.8 | 47.5 | 23.1 | | 158.8 | 306.1 |
| | | | SBWANT IS LOWER RT | | | 77 SWITCH POS CHANGES | | | | | | | | | | | | | |
| 50 | 57 | 30.0 | TDRS -41 | 236.3 | 49.5 | -32.6 | 179.8 | 317.7 | 240.1 | 156.3 | 16.1 | 23.4 | 85.1 | 45.3 | 316.4 | 21.6 | | 132.4 | 35.9 |
| | | | SBWANT IS UPPER RT | | | 78 SWITCH POS CHANGES | | | | | | | | | | | | | |
| 50 | 58 | .0 | TDRS -41 | 236.1 | 48.5 | -30.2 | 179.8 | 315.8 | 300.1 | 156.3 | 16.1 | 83.4 | 282.7 | 74.2 | 318.4 | 338.9 | | 200.7 | 54.4 |
| | | | SBWANT IS UPPER LT | | | 79 SWITCH POS CHANGES | | | | | | | | | | | | | |
| 50 | 59 | .0 | TDRS -41 | 235.7 | 46.5 | -25.6 | 179.7 | 311.9 | 60.1 | 156.3 | 16.1 | 203.4 | 274.9 | 314.7 | 37.9 | 340.6 | | 228.3 | 324.4 |
| | | | SBWANT IS LOWER LT | | | 80 SWITCH POS CHANGES | | | | | | | | | | | | | |
| 50 | 59 | 30.0 | TDRS -41 | 235.5 | 45.4 | -23.5 | 179.7 | 310.0 | 120.1 | 156.3 | 16.1 | 263.4 | 77.3 | 285.8 | 35.9 | 18.8 | | 159.9 | 305.1 |
| | | | SBWANT IS LOWER RT | | | 81 SWITCH POS CHANGES | | | | | | | | | | | | | |

Table XIII. (Continued)

1.2-DN-B0203-001
Page 36

Table IV shows an ECI pitch of 0.5° per second over a one orbit period. In this case only 16 switch changes occur. The ECI yaw and roll angles appear to vary during this simulation. The yaw-pitch-roll sequence results in apparent changes in the yaw and roll angles; yet, when taken in that sequence the resulting attitude maneuver is an ECI pitch of 0.5° per second. Similar results are obtained in Table V with 17 switch position changes for an ECI yaw of 0.5° per second. Table VI shows 32 position changes for thermal conditioning with the X-axis of the orbiter perpendicular to the Orbiter-sun line and a barbeque rate of 0.5° per second. Tables VIII - IX show 2-4 switch changes for star tracking over a 60 minute period. Target 522 is designated as M82, target 522 is designated as M42 (Oeion) and target 530 is designated as W51 (W3). The ECI inertial hold of Table X resulted in 2 switch position changes and the heads down LVLH earth pointing results in 3 changes in Table XI. The LVLH simulation of Table XII resulted in 6 position changes for at 100 minutes period. And finally in Table XIII the worst case orbital angular roll rate of 2° per second in seen to result in 81 changes for a 60 minute period. A summary is given in Table XIV to show switch changes which were encountered for each activity simulated. Also included in Tables XIV are the required switch update periods which correspond to a 5° worst case overlap condition in which the Orbiter could maneuver 5° out of the limits of its preferred pattern into the optimum region of an adjacent antenna. It is noted that the actual

| PARAMETER / ORBITER ACTIVITY | ANGULAR RATE | ATTITUDE CONSTRAINTS | AVERAGE TIME BETWEEN CHANGES | AVERAGE CHANGES PER HOUR | REQUIRED UPDATE PERIOD* |
|---|---|---|---|---|---|
| INERTIAL HOLD | 0 | ECI fixed | 15-45 min. | 2.65 | 50-150 sec |
| LVLH | 0 | $\theta$= 0° $\Psi$= 0° $\Phi$= 0° | 16.7 min. | 3.6 | 56 sec |
| STAR TRACKING | 0 | ECI fixed | 15-30 min. | 2.67 | 50-100 sec. |
| EARTH POINTING | 0 | LVLH HEADS DOWN | 30 min. | 2 | 100 sec. |
| ROLL MANEUVER | 0.5° per sec | ECI $\theta$= const. $\Psi$= const. | 2.9 min. | 20.7 | 9.7 sec. |
| ROLL MANEUVER | 2° per sec | ECI $\theta$= const. $\Psi$= const. | 44.44 sec. | 81 | 2.47 sec. |
| YAW MANEUVER | 0.5° per sec | ECI $\theta$= const. $\Phi$= const. | 5.3 min. | 11.3 | 17.6 sec. |
| PITCH MANEUVER | 0.5° per sec | ECI $\Psi$= const. $\Phi$= const. | 5.6 min. | 10.7 | 18.75 sec. |
| THERMAL CONDX | 0.5° per sec | X-axis to sunline | 2.8 min. | 21.4 | 9.4 sec. |
| ** LANDING | 5° per sec bank | N/A | 10 sec.* | N/A | 1 sec.* |
| ** LAUNCH | 9° per sec roll | N/A | 15-22.5 sec.* | N/A | .55 sec.* |

*5° OVERLAP
** ANALYTICAL RESULT-WORST CASE

TABLE XIV. SUMMARY OF S-BAND QUAD ANTENNA SWITCHING REQUIREMENTS

update period used will limit the amount of switch "chatter" which could occur if the look angle happens to oscillate between two optimum regions, so in effect it controls the deadband of the control system.

## VI. CONCLUSIONS

Mission 2 activities are discussed in Section III with each orbital activity categorized and expressed as a percent of the total mission time excluding launch and landing. The percentages in Table I do not account for 100% of the mission as the remaining 2.5 to 6 percent is not defined at this time. To assess the total number of switch position changes for a mission the formula below is used.

$$N_T = N_e + \sum_{a=1}^{N} N_a P_a T \qquad (1)$$

Where T is the total mission time in hours excluding launch and landing which is 161 hours 20 minutes and 3 seconds.

$N_a$ is the number of switch position changes per hour for a particular activity (a = 1 to N)

$P_a$ is the probability (percent total time x 100) for a particular activity (a = 1 to N)

$N_e$ is an estimate of switch position changes during launch, landing and times not accounted for.

The estimate $N_e$ is based on 4 switch changes per hour during unaccounted for times and 34 changes during launch and landing the estimate for the number of switch position changes $N_e$ is 50 for Option 1, 74 for Option 2 and 60 for Option 3. A listing of the total switch changes for Mission 2, Options 1, 2 and 3 is given in Table XV using Equation (1). The average number of switch

| | TOTAL NUMBER OF SWITCH CHANGES | AVERAGE TIME BETWEEN CHANGES | MIN. IN ORBIT UPDATE PERIOD* | AVE UPDATE PERIOD* |
|---|---|---|---|---|
| OPTION 1 | 1466 | 6.8 min | 2.4 sec** | 22.6 sec |
| OPTION 2 | 1247 | 7.97 min | 2.4 sec** | 26.6 sec |
| OPTION 3 | 1221 | 8.13 min | 2.4 sec** | 27.1 sec |

*5° OVERLAP
** BASED ON 2° PER SECOND ANGULAR RATE IN ORBIT

TABLE XV. TOTAL SWITCH CHANGES FOR MISSION 2

position changes for Mission 2 is seen to be approximately 1300. Also, the average time between changes and the minimum update period is given.

An examination of the data in Section V shows that the maximum orbital angular roll rate of 2° per second will require an update period of approximately 2.4 seconds without exceeding the 5° overlap limit. For the worst case conditions of launch and landing the required update period is reduced to 0.55 seconds and 1 second respectively. With an update of 2.4 seconds the associated Orbiter computer will be required to make a line-of-sight look angle calculation, a TDRS selection and an antenna selection approximately 248,000 times during Mission 2. For an update period of 1 second (worst case landing) 596,000 computer calculations would be required and for a 0.55 second update period (worst case launch) 1,083,000 calculations would be required. Since launch and landing are rather precisely defined, it is probably unreasonable to specify an update based on the worst case conditions of launch and landing. The use of a preprogrammed switching sequence or ground commands for antenna control are recommended for this period.

Another factor to be considered is that a 2° per second roll accounts for only a very small part of the mission and the required update period during the great majority of the activities is in the range of 30-50 seconds. Thus, the possibility of a variable update period should be considered. The shorter update period of 2.4 seconds could

be used when angular rates exceed a certain value. The variable update period would require the additional Orbiter computer input of angular rate.

After the development and use of an extensive computer program tool to simulate automatic switching of the S-Band Quad Antennas, the following conclusions may be reached. A 2.4 second update period should be used for S-Band Quad Antenna switching assuming a fixed update rate. If a variable update period is found to be practical, then the update period would be approximately 40 seconds during most activities with a change to 2.4 seconds during activities involving larger angular rates.

Future efforts involving the S-Band Quad Antennas should logically involve a more detailed study of the associated Orbiter computer interfaces and the further analysis for simulation of Missions 1, 3A and 3B along with a feasibility study for implementing a variable updated period.

## REFERENCES

1. Symonds, R. J., "S-Band Quad Antenna Specification" North American Rockwell No. MC481-0069, Feb. 26, 1974
2. Lindsey, J. F., "Antenna and Propagation Evaluation Monthly Monthly Report", MDTSCO No. 1.2-WP-B0103-009, Nov. 18, 1974
3. Candidate Coordinate Systems for the Space Shuttle Program, JSC Internal Note No. 74-FM-15, March 1, 1974, page 17
4. Zelon, M. and W. S. Dwindell, "S-Band Equipment Specification", North American Rockwell No. MC478-0106, July 19, 1974
5. Space System Baseline Reference Mission Vol II-Mission 2, Revision I, JSC Internal Note No. 73-FM-47 (revised JSC-07896) dated May 29, 1974
6. Guderian, L. and P. Poston "Preliminary Reference Mission 2 Attitude and Pointing Time Lines" MDTSCO No. 1.4-MIB-6, October 30, 1974
7. Shuttle Operational Data Book Vol I, JSC-08934 (Vol. I), June 1974

# APPENDIX I

```
      COMMON/ANGLES/ YAWTAR,PTCTAR,SBQANT(2),NCOUNT                    *NEW
      COMMON  /ALONG/ SCLON,VARR2,WRTFLG                               *NEW
CD1                  *** PROGRAM SAPT ***
CD1  THE SHUTTLE ATTITUDE AND POINTING TIMELINE PROCESSOR (SAPT) IS THE
CD1  BASIC ATTITUDE AND POINTING TIMELINE GENERATION PROGRAM FOR
CD1  SHUTTLE. SAPT CAN GENERATE ATTITUDE AND POINTING TIMELINE TABLES
CD1  FOR DOCUMENTATION AND AT THE SAME TIME ALSO GENERATE ATTITUDE
CD1  TAPES FOR SUBSYSTEM EVALUATIONS. THE BASIC INPUT IS IN THE FORM
CD1  OF ATTITUDE AND POINTING DESCRIPTOR CARDS DEFINING THE NAME OF
CD1  THE EVENT, THE EVENT TIME, AND DESCRIPTORS DEFINING THE ATTITUDE
CD1  AND POINTING REQUIREMENTS FOR THE EVENT. THE PROGRAM REQUIRES
CD1  A TRAJECTORY TAPE MOUNTED ON UNIT F, AN EPHEMERIS TAPE MOUNTED ON
CD1  UNIT K, AND A PCF TAPE INCLUDING SAPT. IF AN ATTITUDE TAPE IS ALSO
CD1  TO BE GENERATED, A SAVE TAPE MUST BE MOUNTED ON THE TAPE UNIT
CD1  DEFINED BY ITAPE. THE FIRST INPUT CARD AFTER THE XQT CARD MUST BE
CD1  A BASE CARD GIVING THE BASE DATE TO MEASURE G.E.T. FROM AND THE
CD1  TAPE UNIT AND PRINT INTERVAL IF A ATTITUDE TAPE IS TO BE GENERATED
CD1  THERE IS ALSO AN INPUT FLAG WHICH DEFINES A TAPE UNIT TO WRITE A
CD1  DESCRIPTOR TIMELINE. AFTER THE BASE CARD, THE ATTITUDE AND POINT-
CD1  ING DESCRIPTOR CARDS FOLLOW. THERE MAY BE UP TO 4 CARDS REQUIRED
CD1  TO DEFINE EACH EVENT. THE FIRST CARD IN EACH EVENT SET IS THE
CD1  EVENT NAME CARD. UP TO 4 LINES OF EVENT DESCRIPTION CAN BE DEFINED
CD1  WITH 18 CHARACTERS TO EACH LINE. THE NEXT CARD IS THE ATTITUDE
CD1  REQUIREMENTS CARD GIVING THE EVENT TIME AND ATTITUDE ONLY REQUIR-
CD1  MENTS. IF THERE ARE NO POINTING REQUIREMENTS, THIS IS THE LAST
CD1  CARD OF THE SET. IF THERE ARE POINTING REQUIREMENTS, 1 OR 2 MORE
CD1  CARDS ARE REQUIRED DEPENDING ON THE NUMBER OF POINTING REQUIRE-
CD1  MENTS. EVENT SETS SHOULD BE STACKED IN CHRONOLOGICAL ORDER. THE
CD1  LAST CARD OF THE DECK IS LABELED 'END CARD' STARTING IN CC 1.
CD1  THE INPUT PARAMETER DEFINITIONS FOR THE BASE CARD ARE GIVEN BELOW.
CD1  THE INPUT DEFINITIONS FOR THE EVENT SETS ARE GIVEN IN SUBROUTINE
```

REPRODUCIBILITY OF THE
ORIGINAL PAGE IS POOR

1.2-DN-B0203-001
Page 46

```
CD1   'CARDIN'
CD2  BASE CARD DEFINITIONS -
CD2   NBASYR,NBASMT,NBASDY,NBASHR,NBASMN,BASSEC
CD2          - BASE G.M.T. THAT G.E.T. IS MEASURED FROM (NOMINALLY THE
CD2            LAUNCH G.M.T.
CD2   ITAPE  - UNIT ON WHICH THE COMMON FORMAT ATTITUDE TAPE IS TO BE
CD2            WRITTEN. IF ZERO, NO TAPE IS REQUIRED.
CD2   GMTINT - TIME INCREMENT BETWEEN PRINT POINTS DESIRED FOR THE
CD2            COMMON FORMAT TAPE. (MINUTES)
CD2   IUREAD - UNIT ON WHICH THE INPUT ATTITUDE DESCRIPTOR FILE WILL BE
CD2            MOUNTED. IF ZERO, ALL INPUT WILL BE MANUAL.
CD2   IUWRT  - UNIT ON WHICH THE REVISED ATTITUDE DESCRIPTOR FILE IS TO
CD2            BE WRITTEN. IF ZERO, NO TAPE IS TO BE WRITTEN.
CD2   IHRST,MINST,SECST
CD2          - GET TO START ATTITUDE TIMELINE IF A DESCRIPTOR FILE HAS
CD2            BEEN PROVIDED. IF NOT INPUT, THE START OF THE DESCRIPTOR
CD2            FILE, OR THE FIRST MANUAL INPUT, WHICHEVER IS EARLIER.
CD2            WILL BE USED.
CD2   IHREND,MINEND,SECEND
CD2          - GET TO END ATTITUDE TIMELINE IF A DESCRIPTOR FILE HAS
CD2            BEEN PROVIDED. IF NOT INPUT, THE END OF THE DESCRIPTOR
CD2            FILE, OR THE LAST MANUAL INPUT, WHICHEVER IS LATER,
CD2            WILL BE USED.
C
      INTEGER AITSYS,ALIGN
      REAL IANG1,IANG2,IANG12,IANG22
      DOUBLE PRECISION BASEJD,BASTIM,TGET,GMT,GMTP
      DOUBLE PRECISION GMTNXT,TSMCAL,TNEXT,TIMTAB
      DOUBLE PRECISION XIMUDP,YIMUDP,ZIMUDP,RKMDP(3),VKMDP(3),DV(3)
      DOUBLE PRECISION GET
      DOUBLE PRECISION RSUNDP(3)
      REAL LIFTKG,ISPSEC
      REAL KX,KY,KZ,NUZ,MINTIM
      DIMENSION DUMMAT(15),R(3),V(3),RSUN(3),VSUN(3),RMOON(3),VMOON(3)
      DIMENSION TARGET(3),TDVEC(3),ATTLV(3,3),ATTI(3,3),SUNVEC(3),
     * PB(3),COEVEC(3),ATTECI(3,3)
      DIMENSION RKM(3),VKM(3),RKMU(3),RSUNU(3)
      DIMENSION ATTSP(3,3)
      DIMENSION SPARE(14),RSUNKM(3)
      COMMON/BASDT/ BASEJD,BASTIM,NBASYR,NBASMT,NBASDY,NBASHR,NBASMN,
     * BASSEC
      COMMON/ATPCOM/ GMTP,ATTP(3,3)
      COMMON/IERRCM/ IERR
      COMMON / VEHLB / KX,KY,KZ,NUZ,BETA,RASUN,DECSUN,RAMOON,DECMON
      COMMON/SMCALL/ TSMCAL,RSUN,VSUN,RMOON,VMOON
      COMMON/CARDS/IHR,MN,SECS,ATTSYS,IMUNUM,IVMS,ANG1,ANG2,ANG3,
     * IHOLD,XRATE,YRATE,ZRATE,IPTFLG,ALIGN,INSTID,IANG1,IANG2,
     * ITYPE1,IDEF1,VAR1,VAR2,VAR3,ITARG1,VAR4,IDIN2,IANG12,IANG22,
     * ITYPE2,IDEF2,VAR12,VAR22,VAR32,ITARG2,VAR42
      COMMON/TVCOM/ ITARG,ALPHAT,BETAT,WVEC(3),ALPHAC,BETAC,AT,
     * TLON,TLAT,ITYPE,IDEF
      COMMON/EVNCOM/NEVENT(12),NAMTAR
      COMMON / REVST / REV
C     REV - REV NUMBER OF VEHICLE FROM START OF MISSION
      COMMON /TRJCNV /A,E,DINC,ARGPER,ASCNOD,AM,DMEAN,TRUEAN,PERIOD
      DATA RTD/57.2957795/,SECPHR/3600.0/
      DATA DUMMAT / 15 * 0.0 /,MINTIM / -1.0 /
      DATA ITAPE / 15 /
```



1.2-DN-B0203-001
Page 47

```
      DATA NBLANK/6H      /,MAXLIN/56/,NUMLIN/56/
      DATA NCARD / 6H      /
C     EGRAVC - GRAVITATIONAL CONSTANT OF THE EARTH ( KM**3 / SEC**2 )
      DATA EGRAVC / 398.60119999 /
C     DV - SENSED VELOCITY CHANGE OVER TIME INTERVAL BETWEEN PRESENT
C          AND PREVIOUS RECORD
      DATA DV / 0.000,0.000,0.000  /
      DATA SPARE / 14 * 0.0 /
      DATA NUMENT/1/
      ORR = 1                                                          *NEW
      WRTFLG = 0.0                                                     *NEW
      SBOANT(1) = 0.0                                                  *NEW
      PRTFLG = 0.0
      LIFTKG = 0.0
      DYNPR = 0.0
      DRAGKG = 0.0
      WGTKG = 0.0
      THRKG = 0.0
      ISPSEC = 0.0
      CALL INTMSG(0,0,0)                                               *NEW
C  BASE CARD VALUES AND FORMAT FOLLOW                                  **-1
C
      READ(5,910) NBASYR,NBASMT,NBASDY,NBASHR,NBASMN,BASSEC,
     * ITAPE,GMTINT,IUREAD,IUWRT,IHRST,MINST,SECST,IHREND,MINEND,SECEND
     *,IASTP
  910 FORMAT(1X,I4,4(1X,I2),1X,F5.2,1X,I2,1X,F6.0,2(1X,I2),
     *  2(1X,I4,1X,I2,1X,F5.2),12X,I1)
C
      WRITE(6,900)
  900 FORMAT(1H1)
      CALL DATEC
      GETST = IHRST + MINST/60.0 + SECST/3600.0
      GETEND = IHREND + MINEND/60.0 + SECEND/3600.0
      IF(GETEND .LE. GETST) GETEND = 200.0
      CALL INPROC(IUREAD,GETST,GETEND,NUMENT)
  100 CONTINUE
C  THE CALL TO GETDES OBTAINS THE FIRST EVENT SET
C
      CALL GETDES(IUREAD,ISTOP)
C
      CALL CROFIL(1)
      IF(ISTOP .GT. 0) GO TO 350
      IF(IERR .GT. 0) STOP
  120 CONTINUE
      JPCARD = 1
      TGET = IHR + MN/60 + SECS/3600
      GMT = TGET + BASTIM
  150 CONTINUE
      CALL TIMEC(GMT,IDAYN,IHRN,MINN,SECN)
      TIMTAP = GMT - BASTIM
      CALL TIMEC (TIMTAP,IDT,IHT,IMT,ST)
      IHT = IDT*24 + IHT
      TTAPE = SNGL(TIMTAP)
      IF(IHRN .GT. 23 .AND. (IDAYN - IDCALL) .EQ. 1) IDCALL = IDCALL-1
      IF((IDAYN - IDCALL) .GE. 0 .AND. (IDAYN - IDCALL) .LT.2) GO TO 200
      IDCALL = IDAYN
      IF(IHRN .LT. 2) IDCALL = IDAYN - 1
      CALL INITAL(IDCALL,ISTOP)
```



REPRODUCIBILITY OF THE ORIGINAL PAGE IS POOR

1.2-DN-B0203-001
Page 48

```
      IF(ISTOP .GT. 0) STOP
  200 CONTINUE
      IF(ALIGN .NE. 1) GO TO 220
      CALL CRDFIL(2)
      CALL ATTDEF(GMT,ATTP)
      GMTP = GMT
      CALL CRDFIL(1)
  220 CONTINUE
      IF (ATTSYS .EQ. NBLANK) IBLANK = 1
      IF(ATTSYS .EQ. NBLANK) CALL CRDFIL(2)
      CALL ATTDEF(GMT,ATTECI)
      CALL CRDFIL(1)
      IF(ATTSYS .NE. NBLANK) GO TO 225
      DO 223 I=1,3
      DO 223 J=1,3
      ATTI(I,J) = ATTECI(I,J)
  223 CONTINUE
      CALL EULER(ATTI,IVMS,ANG1,ANG2,ANG3,ATTECI)
  225 CONTINUE
      CALL NADIR(GMT,SCLON,GDLAT,ALT)
      IF(IPTFLG .EQ. 0) GO TO 250
      CALL FILTYC(1)
      IF(ATTSYS.EQ.NBLANK) CALL CRDFIL(2)
      CALL TARVEC(GMT,NEWVEL,TARGET,TDVEC)
      CALL BPCR(1,ATTECI,TARGET,PB)
      CALL YWPTCH(2,YAWTAR,PTCTAR,PB)
  250 CONTINUE
      ITYPE =1
      IDEF = 0
      CALL TARVEC(GMT,NEWVEL,SUNVEC,TDVEC)
      CALL BPCR(1,ATTECI,SUNVEC,PB)
      CALL YWPTCH(2,YAWSUN,PTCSUN,PB)
      ITYPE = 1
      IDEF = 1
      CALL TARVEC(GMT,NEWVEL,COEVEC,TDVEC)
      CALL BPCR(1,ATTECI,COEVEC,PB)
      CALL YWPTCH(2,YAWCOE,PTCCOE,PB)
      CALL ACP(1,2,2,4,1,3,3,IMUNUM,IMUNUM,GMT,GMT,ATTECI,TDVEC,
     * OMG,0.0,0.0,0.0,0.0,YRATE,ZRATE,XRATE,ATTLV,YOFF,ZOFF,XOFF)
      ZLVLH = ZOFF*RTD
      YLVLH = YOFF*RTD
      XLVLH = XOFF*RTD
      IF(ZLVLH .LT. -0.05) ZLVLH = 360.0 + ZLVLH
      IF(YLVLH .LT. -0.05) YLVLH = 360.0 + YLVLH
      IF(XLVLH .LT. -0.05) XLVLH = 360.0 + XLVLH
      IF(IHOLD .NE. 1) GO TO 260
      CALL ZLVDOT(7,YLVLH,YLVLH,ZLVLH,XRATE,YRATE,ZRATE)
      XRATE = XRATE*(SECPHR/RTD)
      YRATE = YRATE*(SECPHR/RTD)
      ZRATE = ZRATE*(SECPHR/RTD)
  260 CONTINUE
      IF(IMUNUM .EQ. 0) IMUNUM=1
      M=3
      IF(IASTP.EQ.1) M=2
      CALL ACP(1,2,2,4,3,3,M,IMUNUM,IMUNUM,GMT,GMT,ATTECI,TDVEC,
     * OMG,0.0,0.0,0.0,0.0,YRATE,ZRATE,XRATE,ATTI,YOFF,ZOFF,XOFF)
      ZIMU = ZOFF*RTD
      YIMU = YOFF*RTD
```



1.2-DN-B0203-001
Page 49

```
206*          XIMU = XOFF*RTD
207*          IF(ZIMU .LT. -0.05) ZIMU = 360.0 + ZIMU
208*          IF(YIMU .LT. -0.05) YIMU = 360.0 + YIMU
209*          IF(XIMU .LT. -0.05) XIMU = 360.0 + XIMU
210*          YAWTAR = YAWTAR*RTD
211*          PTCTAR = PTCTAR*RTD
212*          YAWSUN = YAWSUN*RTD
213*          PTCSUN = PTCSUN*RTD
214*          YAWCOE = YAWCOE*RTD
215*          PTCCOE = PTCCOE*RTD
216*          IF(SCLON .GT. 180.0) SCLON = SCLON - 360.0
217*          NUMCOM = 1
218*          DO 280 I=2,4
219*          DO 280 J=1,3
220*          IJ =(I-1)*3 + J
221*          IF(NEVENT(IJ) .NE. NBLANK) NUMCOM = I
222*      280 CONTINUE
223*          CALL TRAJCI (GMT,R,V,JERR)
224*          IF (JERR .GT. 0) STOP
225*          RMAG = VECMG(R)
226*          IF (ITAPE .EQ. 0) GO TO 288
227*          RECFLG = 1.0
228*    C     RECFLG- LAST RECORD IN FILE FLAG. IF LESS THAN 0.0 THIS IMPLIES
229*    C             LAST RECORD IN FILE
230*    C     PRTFLG- FLAG INDICATING TYPE OF PRINT POINT
231*          CALL GMTCAL (GMT,NBASYR,YEAR,GMONTH,GDAY,GHR,GMIN,GSEC )
232*    C     SUBROUTINE GMTCAL WILL COMPUTE GREENWICH MEAN TIME IN YEAR,
233*    C     MONTH,DAY,HOUR,MINUTES, AND SECONDS FROM THE BEGINNING OF THE
234*    C     BASE YEAR (NBASYR).
235*          GET = GMT - BASTIM
236*    C     GET - TIME IN HOURS FROM LAUNCH
237*          DO 281 J=1,3
238*          RKM(J) = R(J) * 6378.16
239*    C     RKM - VEHICLE RADIUS VECTOR (ECI) IN KM
240*          VKM(J) = V(J) * (6378.16 / 3600.0 )
241*    C     VKM - VEHICLE VELOCITY VECTOR (ECI) IN KM/SEC
242*          RSUNDP(J) = DBLE(RSUN(J)) * 6378.16D0
243*          RSUNKM(J) = SNGL(RSUNDP(J) )
244*    C     RSUNKM - SUN VECTOR IN KM (ECI)
245*      281 CONTINUE
246*          DO 285 I=1,3
247*          RKMDP(I) = DBLE (RKM(I) )
248*    C     RKMDP -  VEHICLE RADIUS VECTOR (DOUBLE PRECISION )
249*          VKMDP(I) = DBLE (VKM(I) )
250*    C     VKMDP -  VEHICLE VELOCITY VECTOR (DOUBLE PRECISION)
251*      285 CONTINUE
252*          XIMUDP = DBLE (XIMU) / 57.2957795D0
253*          YIMUDP = DBLE (YIMU) / 57.2957795D0
254*          ZIMUDP = DBLE (ZIMU) / 57.2957795D0
255*    C     YIMUDP,ZIMUDP,XIMUDP- PITCH, YAW, AND ROLL GIMBAL ANGLES (RADIANS)
256*    C                           WITH RESPECT TO INPUT REFSMMAT
257*          RMAGKM = VECMG (RKM)
258*    C     RMAGKM - VEHICLE GEOCENTRIC RADIUS (KM)
259*          CALL UNVEC (RKM,RKMU)
260*    C     RKMU - VEHICLE UNIT  RADIUS  VECTOR (ECI)
261*          DECGCN = ASIN  (RKMU(3))
262*    C     DECGCN - VEHICLE GEOCENTRIC DECLINATION (RADIANS)
263*          RASGCN = ATAN2 (RKMU(2),RKMU(1) )
```



REPRODUCIBILITY OF THE ORIGINAL PAGE IS POOR/

1.2-DN-B0203-001
Page 50

```
C     RASGCN - VEHICLE GEOCENTRIC RIGHT ASCENSION (RADIANS)
      VMAGKM = VECMG(VKM)
C     VMAGKM - VEHICLE INERTIAL VELOCITY VECTOR MAGNITUDE (KM/SEC)
      VALTKM = ALT * (6378.16 / 3443.9308855)
C     VALTKM - VEHICLE ALTITUDE ABOVE OBLATE EARTH (KM)
      VEHGDL = GDLAT / RTD
C     VEHGDL - VEHICLE GEODETIC LATITUDE (RADIANS)
      VEHLON = SCLON / RTD
C     VEHLON - VEHICLE LONGITUDE (RADIANS)
      CALL FPAZ (GMT,GAMI,PSII,VELREL,GAMREL,PSIREL,GRAS )
C     GAMI - INERTIAL FLIGHT PATH ANGLE (RADIANS)
C     PSII - INERTIAL AZIMUTH (RADIANS)
C     VELREL - RELATIVE VELOCITY VECTOR MAGNITUDE (KM/SEC)
C     GAMREL - RELATIVE FLIGHT PATH ANGLE (RADIANS)
C     PSIREL - RELATIVE AZIMUTH (RADIANS)
C     GRAS - RIGHT ASCENSION OF GREENWICH (RADIANS)
      AKM = A * ( 1.0 / 3280.833 )
C     AKM - SEMIMAJOR AXIS (KM)
C     E - ECCENTRICITY
      RADINC = DINC / RTD
C     RADINC - INCLINATION TO ORBITAL PLANE (RADIANS)
      ASCNR = ASCNOD / RTD
C     ASCNR - RIGHT ASCENSION OF ASCENDING NODE (RADIANS)
      ARGPR = ARGPER / RTD
C     ARGPR - ARGUMENT OF PERIGEE (RADIANS)
C     TRUEAN - TRUE ANOMALY (RADIANS)
C     PERIOD - ORBITAL PERIOD (SECONDS)
C     SHADOW = 1.0  VEHICLE IN DIRECT SUNLIGHT
C            =-1.0  VEHICLE IN DARKNESS
      SHADOW = 1.0
      CALL UNVEC (RSUN,RSUNU)
      COSANG = DOT (RKMU,RSUNU)
      IF ( ABS(COSANG) .GE. 1.0) COSANG = SIGN (1.0,COSANG)
      IF ( ACOS(COSANG) .GE. ( 180.0 - ASIN(1.0/ RMAG)) ) SHADOW = -1.0
C     ATTECI - DIRECTION COSINES OF THE X,Y, AND Z BODY AXES WITH
C              RESPECT TO THE ECI COORDINATE SYSTEM
      CALL ACP (1,2,2,4,5,3,3,IMUNUM,IMUNUM,GMT,GMT,ATTECI,TDVEC,
     * OMG,0.0,0.0,0.0,0.0,0.0,0.0,0.0,ATTSR,ALSR,BTSR,GMSR )
C     ALSR - PITCH FROM SOLAR REFERENCE SYSTEM (ZYX EULER)
C     BTSR - YAW FROM SOLAR REFERENCE SYSTEM (ZYX EULER)
C     GMSR - ROLL FROM SOLAR REFERENCE SYSTEM (ZYX EULER)
      YLVLHR = YLVLH / RTD
C     YLVLHR - VEHICLE PITCH ANGLE FROM LOCAL VERTICAL IN RADIANS.
C              (ZYX EULER) YAW-PITCH SEQUENCE
      ZLVLHR = ZLVLH / RTD
C     ZLVLHR - VEHICLE  YAW  ANGLE FROM LOCAL VERTICAL IN RADIANS.
C              (ZYX EULER) YAW-PITCH SEQUENCE
      XLVLHR = XLVLH / RTD
C     XLVLHR - VEHICLE  ROLL ANGLE FROM LOCAL VERTICAL IN RADIANS.
C              (ZYX EULER) YAW-PITCH SEQUENCE
      PTSUNR = PTCSUN / RTD
C     PTSUNR - LOOK ANGLE THETA FROM VEHICLE TO SUN (YAW-PITCH SEQUENCE)
      YWSUNR = YAWSUN / RTD
C     YWSUNR - LOOK ANGLE PHI FROM VEHICLE TO SUN (YAW-PITCH SEQUENCE)
      PTCOER = PTCCOE / RTD
C     PTCOER - LOOK ANGLE THETA FROM VEHICLE TO CENTER OF EARTH.
      YWCOER = YAWCOE / RTD
C     YWCOER - LOOK ANGLE PHI FROM VEHICLE TO CENTER OF EARTH.
```



1.2-DN-B0203-001
Page 51

```
C     SPARE - MATRIX FOR SPARE WORDS TO BE RESERVED FOR FUTURE USE
C
C  THE ATTITUDE TAPE RECORDS ARE WRITTEN BELOW
C
      WRITE (ITAPE)                    RECFLG,PRTFLG,YEAR,GMONTH,GDAY,
     *GHR,GMIN,GSEC,GET,(RKMDP(I),I=1,3),(VKMDP(I),I=1,3),(DV(I),I=1,3),
     * YIMUDP,ZIMUDP,XIMUDP,RMAGKM,DECGCN,RASGCN,VMAGKM,GAMI,PSII,
     * VALTKM,VEHGDL,VEHLON,VELREL,GAMREL,PSIREL,GRAS,RFV,AKM,E,RADINC,
     * ASCNR,ARGPR,TRUEAN,PERIOD,DYNPR,DRAGKG,LIFTKG,WGTKG,THRKG,ISPSEC,
     * EGBAVC,SHADOW,(ATTECI(1,J),J=1,3),(ATTECI(2,J),J=1,3),
     * (ATTECI(3,J),J=1,3),YLVLHR,ZLVLHR,XLVLHR,ALSR,BTSR,GMSR,PTSUNR,
     * YWSUNR,PTCOER,YWCOER,(RSUNKM(I),I=1,3),(SPARE(I),I=1,14)
  288 CONTINUE
C
      IF (JPCARD .EQ. 1) GO TO 290
      NUMCOM = 1
  290 CONTINUE
      IF((NUMLIN + NUMCOM) .LE. MAXLIN) GO TO 300
      WRITE(6,950)
  950 FORMAT(1H1,43X,'SHUTTLE ATTITUDE AND POINTING TIME LINE'//
     * 90X,'LOOK ANGLES  LOOK ANGLES    LOOK ANGLES'/
     * 34X,'VEHICLE POSITION    LVLH ATTITUDE',7X,'ECI ATTITUDE',6X,
     * 'TO SUN',6X,'TO EARTH',8X,'TO TARGET'/5X,'GET',
     * 25X,'ALT',3X,'LAT',4X,'LON',4X,'YAW  PITCH  ROLL   YAW  PITCH  ',
     * 'ROLL   YAW  PITCH   YAW  PITCH  TARG  YAW  PITCH'/
     * 1X,'HRS MN SECS',7X,'EVENT',9X,'N MI  DEG',4X,'DEG    DEG   DEG',
     * 3X,'DEG    DEG   DEG   DEG    DEG   DEG    DEG   DEG    ID',
     * 3X,'DEG    DEG'/)
      NUMLIN = 7
  300 CONTINUE
      VARR2 = VAR2                                                      *NEW
C  THE ATTITUDE AND POINTING TABLE IS WRITTEN BELOW.
C
      IF (JPCARD .EQ. 0) GO TO 305
      IF(IPTFLG .EQ. 0) WRITE(6,960) IHT,IMT,ST,(NEVENT(J),J=1,3),
     * ALT,GDLAT,SCLON,ZLVLH,YLVLH,XLVLH,ZIMU,YIMU,XIMU,YAWSUN,
     * PTCSUN,YAWCOE,PTCCOE
  960 FORMAT(1X,I3,1X,I2,1X,F4.1,1X,3(A4),2(1X,F6.1),1X,F6.1,
     * 2(1X,3(1X,F5.1)),2(1X,2(1X,F5.1)))
      CALL TDRSIF(ORB)                                                  *NEW
      IF(WRTFLG) 306,303,303                                            *NEW
  303 CALL SWITCH                                                       *NEW
      IF(SBQANT(2) - SBQANT(1)) 301,306,301                             *NEW
  301 NCOUNT = NCOUNT + 1                                               *NEW
      GOTO302                                                           *NEW
  304 CALL SWPRNT                                                       *NEW
      SBQANT(1) = SBQANT(2)                                             *NEW
      GOTO306                                                           *NEW
  302 IF(IPTFLG .NE. 0) WRITE(6,970) IHT,IMT,ST,(NEVENT(J),J=1,3),      *NEW
     * ALT,GDLAT,SCLON,ZLVLH,YLVLH,XLVLH,ZIMU,YIMU,XIMU,YAWSUN,         **-1
     * PTCSUN,YAWCOE,PTCCOE,NAMTAR,YAWTAR,PTCTAR
  970 FORMAT(1X,I3,1X,I2,1X,F4.1,1X,3(A4),2(1X,F6.1),1X,F6.1,
     * 2(1X,3(1X,F5.1)),2(1X,2(1X,F5.1)),2X,A4,2(1X,F5.1))
      GOTO304                                                           *NEW
  305 CONTINUE                                                          **-1
      IF (IPTFLG .EQ. 0) WRITE (6,960) IHT,IMT,ST,NCARD,NCARD,NCARD,
     *ALT,GDLAT,SCLON,ZLVLH,YLVLH,XLVLH,ZIMU,YIMU,XIMU,YAWSUN,
     *PTCSUN,YAWCOE,PTCCOE
```



REPRODUCIBILITY OF THE ORIGINAL PAGE IS POOR.

1.2-DN-B0203-001
Page 52

```
      CALL TDRSIF(ORB)                                                  *NEW
      IF(WRTFLG) 306,307,307                                            *NEW
  307 CALL SWITCH                                                       *NEW
      IF(SBOANT(2) - SBOANT(1)) 308,306,308                             *NEW
  308 NCOUNT = NCOUNT + 1                                               *NEW
      GOTO309                                                           *NEW
  311 CALL SWPRNT                                                       *NEW
      SBOANT(1) = SBOANT(2)                                             *NEW
      GOTO306                                                           *NEW
  309 IF(IPTFLG .NE. 0)WRITE(6,960)IHT,IMT,ST,NCARD,NCARD,NCARD,        *NEW
     *ALT,GDLAT,SCLON,ZLVLH,YLVLH,XLVLH,ZIMU,YIMU,XIMU,YAWSUN,          **-1
     *PTCSUN,YAWCOE,PTCCOE,NAMTAR,YAWTAR,PTCTAR
      GOTO311                                                           *NEW
  306 CONTINUE
      IF(NUMCOM .EQ. 1) GO TO 350
      DO 320 J=2,NUMCOM
      IJ =(J-1)*3
      WRITE(6,980) NEVENT(IJ+1),NEVENT(IJ+2),NEVENT(IJ+3)
  980 FORMAT(13X,3(A4))
  320 CONTINUE
C
  350 CONTINUE
      GETWRT = IHR + MN/60.0 + SECS/3600.0
C  THE DESCRIPTOR TAPE IS WRITTEN BELOW.
C
      IF(IUWRT .GT. 0) WRITE(IUWRT) GETWRT,ATTSYS,IMUNUM,IVMS,
     * ANG1,ANG2,ANG3,IHOLD,XRATE,YRATE,ZRATE,IPTFLG,ALIGN,INSTID,
     * IANG1,IANG2,ITYPE1,IDEF1,VAR1,VAR2,VAR3,ITARG1,VAR4,IDIN2,
     * IANG12,IANG22,ITYPE2,IDEF2,VAR12,VAR22,VAR32,ITARG2,VAR42,
     * (NEVENT(J),J=1,12),NAMTAR
C
      NUMLIN = NUMLIN + NUMCOM
      IF (GMTINT .GT. 1.E-4) GO TO 400
      IF (IBLANK .NE. 1) CALL CRDFIL(3)
      IBLANK = 0
      IF(IERR .EQ. 0) GO TO 100
      IF(IUWRT .GT. 0) ENDFILE IUWRT
      STOP
  400 CONTINUE
      GMT = GMT + GMTINT/60.0D0
      IF (JPCARD .EQ. 0) GO TO 450
      CALL CRDFIL(1)
      IF (ATTSYS .NE. NBLANK ) CALL CRDFIL(3)
C  THE CALL TO GETDES OBTAINS THE NEXT EVENT SET
C
      CALL GETDES(IUREAD,ISTOP)
C
      IF (ITAPE .GT. 0 .AND. IERR .LT. 0) RECFLG = -1.0
      IF(RECFLG .LT. 0.)WRITE(ITAPE) RECFLG,PRTFLG,YEAR,GMONTH,GDAY,
     *GHR,GMIN,GSEC,GET,(RKMDP(I),I=1,3),(VKMDP(I),I=1,3),(DV(I),I=1,3),
     * YIMUDP,ZIMUDP,XIMUDP,RMAGKM,DECGCN,RASGCN,VMAGKM,GAMI,PSII,
     * VALTKM,VEHGDL,VEHLON,VELREL,GAMREL,PSIREL,GRAS,REV,AKM,E,RADINC,
     * ASCNR,ARGPR,TRUEAN,PERIOD,DYNPR,DRAGKG,LIFTKG,WGTKG,THRKG,ISPSEC,
     * EGRAVC,SHADOW,(ATTECI(1,J),J=1,3),(ATTECI(2,J),J=1,3),
     * (ATTECI(3,J),J=1,3),YLVLHR,ZLVLHR,XLVLHR,ALSR,BTSR,GMSR,PTSUNR,
     * YWSUNR,PTCOER,YWCOER,(RSUNKM(I),I=1,3),(SPARE(I),I=1,14)
      IF (RECFLG .LT. 0.)ENDFILE ITAPE
      IF (IERR .NE. 0 ) STOP
```

SAPT PROGRAM (CONTINUED)

```
@        FOR,G   SAPT,SAPT                                    DATE  181274  PAGE   405

438*          CALL CRDFIL(1)
439*          JPCARD = 0
440*          TNEXT = IHR + MN/60 + SECS/3600
441*          GMTNXT = TNEXT + BASTIM
442*      450 CONTINUE
443*          IF ( (GMTNXT-GMT) .LE. 1.E-5 ) CALL CRDFIL(1)
444*          IF ( (GMTNXT-GMT) .LE. 1.E-5 ) GO TO 120
445*          ATTSYS = NBLANK
446*          ALIGN = 0.
447*          IF ( IERR .EQ. 0) GO TO 150
448*          STOP
449*          END

END OF COMPILATION:        NO  DIAGNOSTICS.
    @        MAP,G   SAPTP,SAPTP
```



1.2-DN-B0203-001
Page 54

# APPENDIX II

```
      SUBROUTINE SWITCH
      COMMON/ANGLES/ YAWTAR,PTCTAR,SBQANT(2),NCOUNT

      IF(PTCTAR .EQ. 0) PTCTAR=360.
      IF(PTCTAR .GT. 0 .AND. PTCTAR .LE. 90 ) GOTO10
      IF(PTCTAR .GT. 90 .AND. PTCTAR .LE. 180) GOTO20
      IF(PTCTAR .GT. 180 .AND. PTCTAR .LE. 270) GOTO30
      IF(PTCTAR .GT. 270 .AND. PTCTAR .LE. 360) GOTO40
   10 IF(180. - YAWTAR) 17,15,15
   15 SBQANT(2) = 1.0
      GOTO100
   17 SBQANT(2) = 2.0
      GOTO100
   20 IF(180. - YAWTAR) 15,17,17
   30 IF(180. - YAWTAR) 37,35,35
   35 SBQANT(2) = 4.0
      GOTO100
   37 SBQANT(2) = 3.0
      GOTO100
   40 IF(180. - YAWTAR) 35,37,37
  100 RETURN
      END
```

SUBROUTINE SWITCH

# APPENDIX III

REPRODUCIBILITY OF THE
ORIGINAL PAGE IS POOR



```
      SUBROUTINE TDRSIF(ORR)
      COMMON /ALONG/ SCLON,VARR2,WRTFLG

      IF(ORR .EQ. 1) GOTO35

      IF(ORR .EQ. 2) GOTO40

      IF(ORR .EQ. 0) GOTO48
   35 VARR2 = -41.0

      IF(VARR2 .EQ. -41.0) GOTO60
   48 VARR2 = -41.0
      ORR = ORR + 2
      GOTO50
   40 VARR2 = -171.0
      ORR = ORR - 2
      GOTO50
   60 ORR = ORR + 1
   50 IF(SCLON .GE. -106. .AND. SCLON .LE. 74.) GOTO 10
      GOTO20
   10 IF(VARR2 .LT. -170. .AND. VARR2 .GT. -172.) WRTFLG= -1.
      IF(VARR2 .LT. -40. .AND. VARR2 .GT. -42.) WRTFLG = 1.
      GOTO30
   20 IF(VARR2 .LT. -40. .AND. VARR2 .GT. -42.) WRTFLG = -1.
      IF(VARR2 .LT. -170. .AND. VARR2 .GT. -172.) WRTFLG = 1.
   30 RETURN
      END
```

SUBROUTINE TDRSIF

# APPENDIX IV

```
      SUBROUTINE SWPRNT
      COMMON/ANGLES/ YAWTAR,PTCTAR,SBQANT(2),NCOUNT
      IANT=SBQANT(2)
      GO TO(10,20,30,40),IANT
   10 PRINT 11, NCOUNT
   11 FORMAT(14X,'SBQANT IS UPPER RT',5X,I5,' SWITCH POS CHANGES')
      GOTO50
   20 PRINT 21, NCOUNT
   21 FORMAT(14X,'SBQANT IS UPPER LT',5X,I5,' SWITCH POS CHANGES')
      GOTO50
   30 PRINT 31, NCOUNT
   31 FORMAT(14X,'SBQANT IS LOWER RT',5X,I5,' SWITCH POS CHANGES')
      GOTO50
   40 PRINT 41, NCOUNT
   41 FORMAT(14X,'SBQANT IS LOWER LT',5X,I5,' SWITCH POS CHANGES')
   50 RETURN
      END
```

SUBROUTINE SWPRNT

# APPENDIX V

```
Z RUN 400177,EE3,BETA,[redacted],M045,C,10,5
 ASG S=V06283
 ASG F=V05655
 ASG K=V04866
 XQT CUR
TRN F,S,K
IN S
IN S
TRI S
 XQT SAPTP
1986 12 01 13 59 59.9
    TDRS -41
  50 00 00.0 LVLH 1 321  0.0    0.0    0.0        .50                    1
 2 SEXTAN 0.0      147.5   G GRDTGT 5.61074 -41.0   0.0
    TDRS -171
  50  0   .0       1 321                                                  1
 2 SEXTAN 0.0      147.5   G GRDTGT 5.61374 -171.0  0.0
    TDRS -41
  50  0 30.0       1 321                                                  1
 2 SEXTAN 0.0      147.5   G GRDTGT 5.61074 -41.0   0.0
    TDRS -171
  50  0 30.0       1 321                                                  1
 2 SEXTAN 0.0      147.5   G GRDTGT 5.61374 -171.0  0.0
    TDRS -41
  50  1   .0       1 321                                                  1
 2 SEXTAN 0.0      147.5   G GRDTGT 5.61074 -41.0   0.0
    TDRS -171
  50  1   .0       1 321                                                  1
 2 SEXTAN 0.0      147.5   G GRDTGT 5.61374 -171.0  0.0
    TDRS -41
  50  1 30.0       1 321                                                  1
 2 SEXTAN 0.0      147.5   G GRDTGT 5.61074 -41.0   0.0
    TDRS -171
  50  1 30.0       1 321                                                  1
 2 SEXTAN 0.0      147.5   G GRDTGT 5.61374 -171.0  0.0
    TDRS -41
  50  2   .0       1 321                                                  1
 2 SEXTAN 0.0      147.5   G GRDTGT 5.61074 -41.0   0.0
    TDRS -171
  50  2   .0       1 321                                                  1
 2 SEXTAN 0.0      147.5   G GRDTGT 5.61374 -171.0  0.0
    TDRS -41
  50  2 30.0       1 321                                                  1
 2 SEXTAN 0.0      147.5   G GRDTGT 5.61074 -41.0   0.0
    TDRS -171
  50  2 30.0       1 321                                                  1
 2 SEXTAN 0.0      147.5   G GRDTGT 5.61374 -171.0  0.0
    TDRS -41
  50  3   .0       1 321                                                  1
 2 SEXTAN 0.0      147.5   G GRDTGT 5.61074 -41.0   0.0
    TDRS -171
  50  3   .0       1 321                                                  1
 2 SEXTAN 0.0      147.5   G GRDTGT 5.61374 -171.0  0.0
    TDRS -41
  50  3 30.0       1 321                                                  1
 2 SEXTAN 0.0      147.5   G GRDTGT 5.61074 -41.0   0.0
    TDRS -171
  50  3 30.0       1 321                                                  1
 2 SEXTAN 0.0      147.5   G GRDTGT 5.61374 -171.0  0.0
```

RUN DECK FOR SAPT/SWITCH/SWPRNT/TDRSIF

REPRODUCIBILITY OF THE
ORIGINAL PAGE IS POOR

```
    TDRS -41
  50  4   .0        1 321                                                    1
 2 SEXTAN 0.0       147.5   G GRDTGT 5.61074 -41.0   0.0
    TDRS -171
  50  4   .0        1 321                                                    1
 2 SEXTAN 0.0       147.5   G GRDTGT 5.61374 -171.0  0.0
    TDRS -41
  50  4 30.0        1 321                                                    1
 2 SEXTAN 0.0       147.5   G GRDTGT 5.61074 -41.0   0.0
    TDRS -171
  50  4 30.0        1 321                                                    1
 2 SEXTAN 0.0       147.5   G GRDTGT 5.61374 -171.0  0.0
    TDRS -41
  50  5   .0        1 321                                                    1
 2 SEXTAN 0.0       147.5   G GRDTGT 5.61074 -41.0   0.0
    TDRS -171
  50  5   .0        1 321                                                    1
 2 SEXTAN 0.0       147.5   G GRDTGT 5.61374 -171.0  0.0
    TDRS -41
  50  5 30.0        1 321                                                    1
 2 SEXTAN 0.0       147.5   G GRDTGT 5.61074 -41.0   0.0
    TDRS -171
  50  5 30.0        1 321                                                    1
 2 SEXTAN 0.0       147.5   G GRDTGT 5.61374 -171.0  0.0
    TDRS -41
  50  6   .0        1 321                                                    1
 2 SEXTAN 0.0       147.5   G GRDTGT 5.61074 -41.0   0.0
    TDRS -171
  50  6   .0        1 321                                                    1
 2 SEXTAN 0.0       147.5   G GRDTGT 5.61374 -171.0  0.0
    TDRS -41
  50  6 30.0        1 321                                                    1
 2 SEXTAN 0.0       147.5   G GRDTGT 5.61074 -41.0   0.0
    TDRS -171
  50  6 30.0        1 321                                                    1
 2 SEXTAN 0.0       147.5   G GRDTGT 5.61374 -171.0  0.0
 END CARD
 EDIT
```

RUN DECK FOR SAPT/SWITCH/SWPRNT/TDRSIF