General Disclaimer

One or more of the Following Statements may affect this Document

- This document has been reproduced from the best copy furnished by the organizational source. It is being released in the interest of making available as much information as possible.

- This document may contain data, which exceeds the sheet parameters. It was furnished in this condition by the organizational source and is the best copy available.

- This document may contain tone-on-tone or color graphs, charts and/or pictures, which have been reproduced in black and white.

- This document is paginated as submitted by the original source.

- Portions of this document are not fully legible due to the historical nature of some of the material. However, it is the best reproduction available from the original submission.

Produced by the NASA Center for Aerospace Information (CASI)

NASA TECHNICAL MEMORANDUM

NASA TM X-71913

NASA TM X-71913

(NASA-TM-X-71913) A SUMMARY OF THE ECAS PERFORMANCE AND COST RESULTS FOR MHD SYSTEMS (NASA) 22 p HC $3.50 CSCL 10B

N76-22668

Unclas

G3/44 26873

A SUMMARY OF THE ECAS PERFORMANCE AND COST RESULTS FOR MHD SYSTEMS

by G. R. Seikel, R. J. Sovie, R. K. Burns, G. J. Barna, J. A. Burkhart, J. J. Nainiger, and J. M. Smith
Lewis Research Center
Cleveland, Ohio 44135

MAY 1976
RECEIVED
NASA STI FACILITY
INPUT BRANCH

TECHNICAL PAPER to be presented at the Fifteenth Symposium on the Engineering Aspects of Magnetohydrodynamics
Philadelphia, Pennsylvania, May 24-26, 1976

A SUMMARY OF THE ECAS PERFORMANCE AND COST RESULTS FOR MHD SYSTEMS

G. R. Seikel, R. J. Sovie, R. K. Burns, G. J. Barna,
J. A. Burkhart, J. J. Nainiger, and J. M. Smith
NASA Lewis Research Center
Cleveland, Ohio

REPRODUCIBILITY OF THE
ORIGINAL PAGE IS POOR

Abstract

The interagency-funded, NASA-coordinated Energy Conversion Alternatives Study (ECAS) has studied the potential of various advanced power plant concepts using coal and coal-derived fuel. Principle studies were conducted through prime contracts with the General Electric Company and the Westinghouse Electric Corporation. The results indicate that open-cycle coal-fired direct-preheat MHD systems have potentially one of the highest coal-pile-to-bus-bar efficiencies and also one of the lowest costs of electricity (COE) of the systems studied. Closed-cycle MHD systems may have the potential to approach the efficiency and COE of open-cycle MHD. The 1200-1500 F liquid-metal MHD systems studied do not appear to have the potential of exceeding the efficiency or competing with the COE of advanced steam plants.

I. Introduction

Using common ground rules, the Energy Conversion Alternatives Study (ECAS) has studied various advanced power plant concepts using coal or coal-derived fuel. This unique effort combines resources of three U.S. agencies (NSF, ERDA, and NASA) and the contracted expertise and experience of teams led by the General Electric Company and the Westinghouse Electric Corporation. Independent comparative evaluation studies and overall coordination were provided by NASA's Lewis Research Center.

ECAS involved a broad base of both U.S. Federal and private sector participation. An Interagency Steering Committee provided to NASA the necessary guidance and direction for study execution. The steering committee received advice and counsel from two supporting panels: An Interagency Technical Review Panel and a Utility Advisory Panel with members drawn from the utilities, the Electric Power Research Institute, and the Sierra Club. In addition, NASA received direct technical support from ERDA for coal and coal-derived fuel data and from EPA for guidance on environmental constraints. In support of the MHD studies, an advisory panel of ERDA MHD experts served as consultants to the Lewis in-house MHD staff.

ECAS included three primary tasks, parametric analysis (Task 1), conceptual design (Task 2), and implementation assessment (Task 3). In Task 1[1-4], ten types of power plant concepts were analyzed parametrically: three types of MHD systems (open-cycle, closed-cycle, and liquid-metal), two open-cycle turbine systems (simple and combined cycle), four closed-cycle turbine systems (advanced steam, gas turbine, liquid metal Rankine, and supercritical CO_2), and fuel cells.

On the basis of the parametric results, 11 specific power plants were selected for conceptual design (Task 2)[5-7] and for assessment of the resources required to implement development of the first commercial plant (Task 3). The plants studied in Tasks 2 and 3 include an open-cycle MHD/steam plant, three advanced steam plants, four combined-cycle plants, a closed-cycle gas turbine plant, a potassium topping plant, and a high-temperature fuel-cell/steam plant.

The two contractors took different approaches in forming their respective ECAS teams. General Electric Corporate Research and Development formed a core team to insure comparable treatment of systems. The core team included the Bechtel Corporation, the Foster Wheeler Energy Corporation, and various departments of the General Electric Company. In addition, the G.E. team included an advocate for each type power plant. Avco Everett Research Laboratory, G.E. Space Products Division, and Argonne National Laboratory served as advocates for the open-cycle, closed-cycle, and liquid-metal MHD systems, respectively.

In contrast, Westinghouse Electric Corporation Research Laboratories organized their team primarily by power-plant type with responsibility for each type being assigned to a specified division of Westinghouse. The responsible divisions in turn received assistance from a common components, balance of plant, and materials supporting team, which includes Chas. T. Main, Inc. The research laboratories were responsible for all-type MHD systems.

The supporting Lewis Research Center ECAS team received assistance from Burns and Roe, Inc. and subcontractors to them. Relevant to MHD systems, the major subcontractors were: the FluiDyne Engineering Corporation who provided data on ceramic high-temperature preheaters, the Magnetic Corporation of America (MCA) who provided data on superconducting magnets, and the Westinghouse Electric Corporation (Chemical Engineering Research) who provided data on an oxygen blown intermediate BTU gasifier. Other companies that participated were: Airco, Inc. (oxygen plants, argon purifiers), Air Products and Chemicals, Inc. (oxygen plants), ASEA Ltd. (DC-AC inverters), Combustion Engineering, Inc. (combustors), CTI-Cryogenics (helium and oxygen plants), Elliott Company (compressors), Linde Division of Union Carbide (oxygen plants), Petrocarb, Inc. (coal-feed systems), Research-Cottrell (precipitators), and Zurn Industries (metallic heat exchangers). The ERDA Pittsburgh Energy Research Center and the University of Tennessee Space Institute also contributed technical and costing data on their respective multi-stage and single-stage MHD coal combustors.

This paper first briefly presents a general introduction to MHD power plants and then describes the ground rules the contractors used in performing ECAS. It summarizes:

1. The ECAS Task 1 results for all three type

MHD systems studies by the G.E. team, the Westinghouse team, and the supporting Lewis Research Center team.

2. The Task 2 open-cycle MHD/steam plant performance and cost results by the G.E. team.

3. How the MHD systems studied in each task compare in performance and cost of electricity with the alternative plants studies. The sensitivity of the comparison to various economic ground rules will also be discussed.

For convenience, the discussion is organized by type of MHD system. The open-cycle MHD Task 1 and 2 results are considered first followed respectively by the closed-cycle and liquid-metal MHD results.

MHD Power Plants

Magnetohydrodynamic generators produce electric power by passing a high-velocity conducting fluid through a strong magnetic field. The conducting fluid may be either a conducting gas, a plasma, or a liquid metal. Two types of plasma MHD systems have been studied as part of ECAS. The simplest of these in concept is the open-cycle MHD system. In it an alkali-metal compound is added directly to very high-temperature combustion products and used as the MHD generator fluid. The other plasma MHD generator system is closed-cycle MHD, in which a very pure inert gas is raised to high temperature in a heat-exchanger system and seeded with a pure alkali-metal to produce the MHD generator fluid. The interest in closed-cycle systems stems from the fact that, if the working fluid can be kept sufficiently pure, equivalent conductivities of the working fluids can be obtained at only 3000°F compared with approximately 4500°F for the open-cycle systems.

Two types of liquid-metal MHD (LMMHD) systems have also been proposed. In both, a mixture of a liquid metal and a gas is raised to a high temperature and expanded to high velocity in a nozzle as a foamlike substance. In one type of liquid-metal system, this foamlike mixture is used directly as an MHD working fluid. After exiting the MHD generator, the gas and liquid metal are then separated. In the alternative scheme, the gas and liquid metal are separated at a high velocity after leaving the nozzle and only the liquid metal is passed through the MHD generator. In ECAS only the foamlike MHD generator system was investigated. The alternative concept, which had been previously studied in some detail[8] by the Jet Propulsion Laboratory (JPL), was not included. This decision was based upon consultations with the leading U.S. experts in liquid-metal MHD, including JPL. It was unanimously agreed that the foamlike MHD generator systems had a higher probability than the alternative LMMHD concept of being competitive within the ECAS ground rules in terms of both cost of electricity and performance.

The MHD power systems are of interest for advanced power plants primarily because of their high performance potentials. Their performance potential is directly related to their maximum temperatures. Since open-cycle systems operate with the highest temperatures, they have the highest level of performance potential. Closed-cycle systems have the next highest performance potential, and liquid-metal systems have the most limited potential.

In all types of MHD generator systems, the MHD working fluid exits the generator at a relatively high temperature. To obtain high-performance power plants, the sensible heat in the MHD exhaust must be utilized. This is accomplished both by transferring it to a bottoming cycle, generally a steam plant, and by utilizing it in recuperative and/or regenerative heat exchangers. From the standpoint of mating the MHD topping cycles with steam bottoming cycles, it is generally not advantageous to use steam bottoming plants that are as efficient as the best free-standing steam plants.

Specifically, the best combined plants will use less regenerative feedwater preheating than is used in a conventional steam plant. As a result the MHD systems generally cannot take advantage of the higher performance bottoming plant. This is particularly significant in the coal-fired liquid-metal-type systems.

The MHD systems have a number of general features that pose economic penalties on them. Because they are more complex than steam plants, construction times for MHD systems are estimated to be longer than for steam plants. This results in large escalation and interest costs during construction for the MHD systems. Because the MHD systems produce direct-current power, they require costly inverter systems to convert this power for alternating-current transmission. In addition, the MHD systems are one of the least developed concepts considered in ECAS. Because of the additional unknowns concerning components and plant design, design allowances in either major components or balance-of-plant costs were included in some cases. In the Task 1 studies, General Electric added a 10 percent design allowance in balance of plant, and Westinghouse added an additional contingency to some specific components such as magnets. Equivalent additional costs were not charged to the systems that use lower temperature and less exotic working fluids and have a higher state of development.

Clearly, there are major uncertainties in estimating cost and performance for system components that have never been built and tested or for which only small-scale experimental results exist. Thus in order to practically carry out the MHD portion of ECAS, a number of fairly pragmatic assumptions were required. Some of these may seem quite optimistic in terms of performance and cost; others may be conservative from the standpoint of underestimating future development.

On the conservative side, a conscious effort was made to favor system concepts and to limit component temperatures to those that could be best defined and costed and for which there was the least stretch of existing technology. Thus for a system such as MHD, which is in its early stages of development and more than a decade away from being a commercial power plant, possible technology developments may be underestimated. Specifically, some potentially attractive concepts were not included, not because of their lack of potential, but because they could not be sufficiently well defined for adequate performance and cost estimating.

REPRODUCIBILITY OF THE ORIGINAL PAGE IS POOR

Because of the time limits on the study, Task 1 performance and cost estimates were done in parallel except for a few points. As a result, most points selected were based on the collective judgment at the start of the study as to which points would be most attractive. This limitation led to the choice of better points for those systems for which more prior parametric studies had been performed. Among the three types of MHD systems studied, this tended to favor the open-cycle systems, but in general this restriction penalized the more advanced systems for which extensive studies had not been previously conducted. Even in selecting the Task 2 open-cycle system to be studied, the system characteristics and operating conditions were not optimized but were based on only slightly modifying one of the more attractive Task 1 G.E. points.

On the optimistic side, it was assumed that there are no unsolvable MHD development barriers despite the lack of any real operating life data on critical components. Performance estimates have been made based on theory and extrapolation from relatively small-scale experiments. In Task 1 questions associated with power plant life and maintenance were addressed only in a limited manner, both economically and in terms of the materials problems they posed. In Task 2, a somewhat more detailed examination of these problems was made.

The attractiveness of the MHD systems relative to alternative advanced systems is affected by the basic economic ground rules used in comparing the systems. The ground rules used by the ECAS contractors are summarized briefly in the following section. The impact of using various alternative assumptions in calculating COE is discussed in the last section of this paper.

II. ECAS Ground Rules

To achieve common and consistent treatment of systems in ECAS, the contractors were given a common set of specifications and ground rules. Table 1 summarizes a number of the more important of these. Except as noted, these ground rules were specified by the Lewis Research Center with the assistance of the supporting agencies and the Utility Advisory Panel.

It is important to note that the economic ground rules chosen can significantly affect the apparent relative attractiveness of alternative systems. Therefore, the raw contractor results must be viewed in this perspective.

The contractors were requested to present their results in a common format from which the results can easily be translated to alternative economic ground rules for alternative interpretations. The impact on the results of four possible alternatives will be illustrated in the last section of this paper.

In summary, the contractors results assume that construction of all plants is initiated in the base year (mid 1974 for Task 1, mid 1975 for Task 2). Interest during construction and escalation are included in the plant capital costs; thus, these are also included in the cost of electricity capital charges. Operating and maintenance cost and fuel costs used to calculate cost of electricity were, however, specified and held fixed at the specified cost. Thus, they do not include any increases due to inflation.

TABLE 1. - GROUND RULES USED BY CONTRACTORS FOR TASKS 1 AND 2 OF THE ECAS STUDY

	TASK 1	TASK 2
Common Ground Rules		
Capacity factor	0.65	Same
Plant availability target	0.90	Same
Site	Middletown, USA	Same
Cooling	Once through, wet (emphasized), dry	Wet
Ambient condition Coals	59° F, 60% relative humidity Illinois #6, Mont. Sub-bituminous, North Dakota Lignite	Same Illinois #6
Emission standards	Present EPA "New Source Performance Standards"	Same
Economic Factors		
Economic base year	Mid 1974	Mid 1975
Escalation	6.5%	Same
Interest during construction	10.0%	Same
Labor rate (avg)	$10.60/hr	$11.75/hr
Fixed charge rate	18%	Same
Coal cost as delivered to site (base value)	$0.85/million BTU	$1.00/million BTU
Assumed date for start of power plant construction	Mid 1974	Mid 1975
Contractor cash-flow/interest compounding curves during construction	Contractor specified	NASA specified
Inflation rates for fuel, and for operation and maintenance	Zero	Same
Indirect charges as a percentage of direct charges	Contractor specified	Same
Architect-engineer services	Contractor specified	Same
Construction contingency	Contractor specified	Same

The contractor overall efficiency results do include all processes required to convert from coal to appropriate high voltage AC power for transmission (500 kV 60 Hertz for large plants). Thus, for systems using clean or semi-clean coal-derived fuels, the efficiency of the coal to fuel conversion has been included in the overall energy efficiency.

The intention of having independent and parallel contractor studies in ECAS Task 1 was well served. For although the common ground rules were used by both contractors, substantial capital cost differences were obtained for equivalent power plants. Generally the G.E. team estimated higher capital costs. This was in part related to higher estimates for balance of plant costs.

In reference 3, NASA examines for comparative purposes various cost estimated using the ECAS Task 1 ground rules for equivalent steam power plants. Capital cost for G.E. and Westinghouse are $675/kW$_e$ and $468/kW$_e$, respectively, a difference of $207/kW$_e$. NASA, in addition, developed three other cost estimates. In conjunction with Hollifield National Laboratory an estimate of $521/kW$_e$ was made using the "CONCEPT" program. Burns and Roe, Inc. adapted a recent plant budget estimate to the ECAS ground rules and desired equivalent plant; the resulting capital cost estimate was $507/kW$_e$. A final alternative estimate of $516/kW$_e$ was obtained by NASA by estimating the cost of modifying the TVA Bull Run plant to make it equivalent to the contractors' plants.

In summary, because of the relatively large

differences in Task 1 costing, caution must be exercised in comparing the results of the G.E. and the Westinghouse studies with each other. Each contractor's Task 1 study should, however, be generally self-consistent. The level of detail in Task 1 was structured to obtain broad parametric coverage of the ten conversion systems and focused on obtaining comparisons on a relative not absolute basis. In Task 2 the greater level of detail permitted a more definitive plant design cost.

III. Open-Cycle Magnetohydrodynamic Systems

Open-cycle MHD power systems are of interest for advanced power plants primarily because of their high performance potential. This potential is the direct result of their high maximum operating temperature. The MHD working fluid exiting the generator is also at a relatively high temperature, and this heat must be utilized in order to obtain high efficiency. This is accomplished by using the MHD generator exhaust to preheat the oxidizer (and sometimes the fuel) and to produce additional power in a bottoming plant. In addition to a large number of possible MHD operating parameters, there are many different configurations for such an MHD plant. These involve a variety of bottoming cycle types and their integration with the MHD cycle, a variety of methods of preheating the oxidant, and a range of possible fuels and oxidants. A representative sample of such variations has been studied in ECAS.

Summary of Results

Task 1. General Electric studied 30 parametric cases, 23 of which used direct-coal firing and 7 of which used solvent-refined coal (SRC) as the fuel. All but one case used a steam bottoming cycle; that exception used a gas-turbine bottoming cycle. All but two cases used a high-temperature (2000°F and higher) regenerative heat exchanger to preheat the air with MHD generator exhaust gas (i.e., direct air preheat). One used lower temperature (1500°F) direct air preheat with oxygen enrichment, and the other assumed the air to be preheated by a separate clean fuel gas from a coal gasifier (i.e., indirect air preheat).

Westinghouse studied 39 parametric cases, 34 of which were direct-coal fired and 5 of which used a low-BTU fuel gas obtained from an integrated gasifier. Half of their direct-coal-fired cases used direct air preheat to about 2400°F, the others assumed direct air preheat to as high as 2400°F, followed by additional heating in an indirect air preheater. The fuel for the indirect air preheater was the volatiles obtained by carbonizing the coal before using it in the main combustor. All the Westinghouse cases used a steam bottoming cycle.

The G.E. coal-fired cases ranged from 44 to 53 percent in overall efficiency and their SRC cases ranged from 40 to 46 percent. The efficiency of SRC fuel cases is reduced by the 78 percent fuel conversion efficiency; their power plant efficiency, not including this fuel conversion efficiency, ranged from 52 to 59 percent. The costs of electricity (COE) ranged from 41 to 48 mills/kw-hr.

The Westinghouse coal-fired, direct-air-preheat cases range from 44 to 49 percent in efficiency and 27 to 31 mills/kw-hr in COE. The coal-fired cases with direct and indirect air preheat range from 44 to 54 percent in efficiency and 27 to 35 mills/kW-hr in COE. The higher efficiency was obtained by air preheat to about 3500°F. With indirect air preheat to about 3000°F, 50 percent efficiency was obtained. The cases using low-BTU fuel gas ranged from 46 to 54 percent in efficiency and 34 to 42 mills/kW-hr in COE.

For nearly comparable conditions, both G.E. and Westinghouse obtained efficiencies of 48-49 percent. This is for a direct-coal-fired plant using direct-air preheat to 2400°-2500°F and a 3500 psi/1000°F/1000°F steam bottoming cycle. The results indicate that by using the best features of each, the efficiency could reach 50 percent. The cost estimates, however, are substantially different. The G.E. COE for these conditions is 43.9 mills/kw-hr, and the Westinghouse COE is 27 mills/kw-hr. Most of this difference is due to a difference in plant capital cost estimates. The G.E. and Westinghouse results were $1102/kWe and $642/kWe, respectively. The Westinghouse cost estimates for several of the major components were higher than G.E.'s. General Electric's estimates for balance-of-plant materials and installation costs, however, were higher than Westinghouse's estimates. Differences in the estimates of major component costs can be resolved only after further technology development. The conceptual design completed in Task 2 essentially eliminated the balance-of-plant cost differences.

Both contractors show a loss in efficiency of about 3 percentage points associated with seed reprocessing when high-sulfur coal is used. Alternative reprocessing concepts with lower performance penalties should be investigated. The system with an integrated gasifier and in-bed sulfur removal appears to have the potential to be competitive with direct-coal-fired MHD systems when high-sulfur coal is used.

Task 2. General Electric examined in greater detail and developed a conceptual plant design for a modification of one of their more attractive Task 1 points. This was a nominal 2000 MWe direct-Illinois #6 coal-fired system with direct-air-preheat to 2500°F, 9 atm. MHD combustor, and 0.8 MHD generator load parameter. It differed from Task 1 Base Case 1 in that a diagonal wall generator was used to decrease inverter cost, and a split economizer was used to increase the steam bottoming plant efficiency. The resulting thermodynamic cycle efficiency was increased to 54% or 1.2 percentage points over the Task 1 value. The overall efficiency, however, remained at 48.3% because after closer examination, a larger loss in efficiency was estimated for seed reprocessing.

In the Task 2 conceptual plant design, a substantial effort was made to develop a plant layout with lower balance-of-plant costs. This plus other cost improvements resulted in a Task 2 power plant capital cost of $718/kWe, a reduction of $384/kWe from the Task 1 value which was, in addition, estimated for a year earlier economic base year. The corresponding cost of electricity for the Task 2 plant is 31.8 mills/kw-hr compared to 43.9 mills/kw-hr for the corresponding Task 1 plant.

REPRODUCIBILITY OF THE ORIGINAL PAGE IS POOR

Two major system components with significantly higher Task 2 cost are the radiant-heat exchanger or furnace and the low-temperature-metallic-air heater. Upon more detailed examination, it was concluded that these components would be significantly more expensive (a factor of 3 to 4 times) than had been estimated in Task 1.

TABLE 2. - PERFORMANCE RESULTS FOR ILLINOIS #6 - BITUMINOUS-COAL-FIRED, OPEN-CYCLE MHD POWERPLANTS

[Nominal plant output power, 2000 MWe; air preheated by direct firing.]

	Task 1		Task 2
	Westinghouse base case 2, point 17	General Electric base case 1	General Electric results
Net output power, MWe	1988	1895	1932
Coal thermal input to combustor, MWt	3870	3700	3688
Air preheat temperature, °F	2400	2500	2500
MHD inlet temperature, °F	4503	4634	4634
MHD diffuser exit temperature, °F	3655	3625	3662
MHD inlet pressure, atm	7.0	9.0	9.0
Compressor exit pressure, atm	7.6	10.5	10.7
Airflow, lb/sec:			
Primary	2653	2486	2492
Secondary	2.9	187	189
MHD inverter output power, MWe	1230	1399	1406
Compressor power required,[a] MWe	307	361	377
Steam turbine-generator output, MWe	821	555	587
Plant gross power output, MWe	2051	1954	1993
(MHD power - Compressor power/Plant gross power	0.45	0.53	0.52
Auxiliary power required, MWe	63	55.6	50.7
Auxiliary power/Plant gross power	0.031	0.028	0.025
Coal thermal input to seed processing, MWt	213	231	311
Coal for seed processing/Total coal	0.052	0.059	0.078
MHD efficiency = (MHD power - Compressor power)/Coal to combustor	0.238	0.281	0.279
Steam-cycle efficiency (including generator)	0.420	0.400	0.420
Thermodynamic efficiency = (Gross power/Coal to combustor	0.530	0.528	0.540
Overall efficiency = (Net power/Total coal)	0.487	0.483	0.483

[a]Given in electric power even if shaft driven.

TABLE 3. - CAPITAL COST DISTRIBUTIONS FOR OPEN-CYCLE MHD POWERPLANTS USING ILLINOIS #6 BITUMINOUS COAL AND DIRECT-FIRED AIR PREHEATERS

[Nominal plant output power, 2000 MWe.]

Component of capital cost	Task 1		Task 2
	Westinghouse base case 2, point 17	General Electric base case 1	General Electric
	Capital cost, $/kWe		
Direct cost:			
Major components and balance-of-plant materials	214	292	210
Direct site labor	78	94	62
Indirect site labor cost	40	84	55
Subtotal	332	470	327
Architect and engineering services	23	50	29
Contingency cost	29	104	71
Escalation and interest during construction	257	480	290
Total	642	1103	718
Construction time, yrs	7	7	6.5

TABLE 4. - GENERAL ELECTRIC TASK 2 OPEN-CYCLE MHD COST DISTRIBUTION

Cost associated with expensive major components (> 10$/kWe)	Installed cost 10^6 $
Coal processing and injection equipment	23
Magnet system	44
Air heaters:	
High temperature	27
Low temperature	59
Seed recovery and reprocessing	24
Radiant furnace	23
Steam furnace - SH/RH	28
Steam turbine/generator	25
Inversion equipment	47
Subtotal	300
All other components and balance-of-plant materials plus additional direct and indirect site labor	332
Total 10^6 $	632
$/kWe	327

TABLE 5. - COST OF ELECTRICITY FOR OPEN-CYCLE MHD POWERPLANTS USING ILLINOIS #6 BITUMINOUS COAL AND DIRECT-FIRED AIR PREHEATERS

[Nominal plant output power, 2000 MWe.]

Component of cost of electricity	Task 1		Task 2
	Westinghouse base case 2, point 17	General Electric base case 1	General Electric
	Cost of electricity, mills/kW-hr		
Capital cost	20.3	34.9	22.7
Operating and maintenance cost	0.8	2.8	1.7
Fuel cost for MHD generator and seed reprocessing	6.0	6.2	7.3
Total	27.1	43.9	31.8

Open-Coal-Fired MHD Cycle

Figure 1 shows a representative MHD cycle. After proper preparation, the primary coal is supplied to the MHD combustor along with compressed air that has been preheated to a high temperature. Generally, a large fraction, 80 to 90 percent of the coal slag is assumed to be rejected directly from the MHD combustor system. The combustor is assumed to operate fuel rich to reduce NOX production. The alkali-metal seed, a potassium compound, is added to the nominally 4500°F exhaust of the combustor.

The flow is expanded at a high subsonic Mach number through the MHD generator with its superconducting magnet. Since the MHD generator electrical output is direct current, this power is taken through an inverter system to be converted to alternating current for transmission. After the MHD flow is diffused, it is taken into a radiant heat exchanger. Heat losses in the combustor system, the MHD generator, and the diffuser are used in the steam bottoming plant to heat supercritical steam.

In the radiant heat exchanger, the flow is further cooled and additional slag is removed. Secondary air is also added to complete the combustion. Residence time in the radiant heat exchanger must be sufficiently long for the nitrogen oxides (NOX) concentration to approach its acceptable equilibrium level. Typically, seconds of residence time are required at approximately 3000°F. The addition of the secondary cooling air to complete combustion actually causes a cooling of the flow at these conditions.

REPRODUCIBILITY OF THE
ORIGINAL PAGE IS POOR

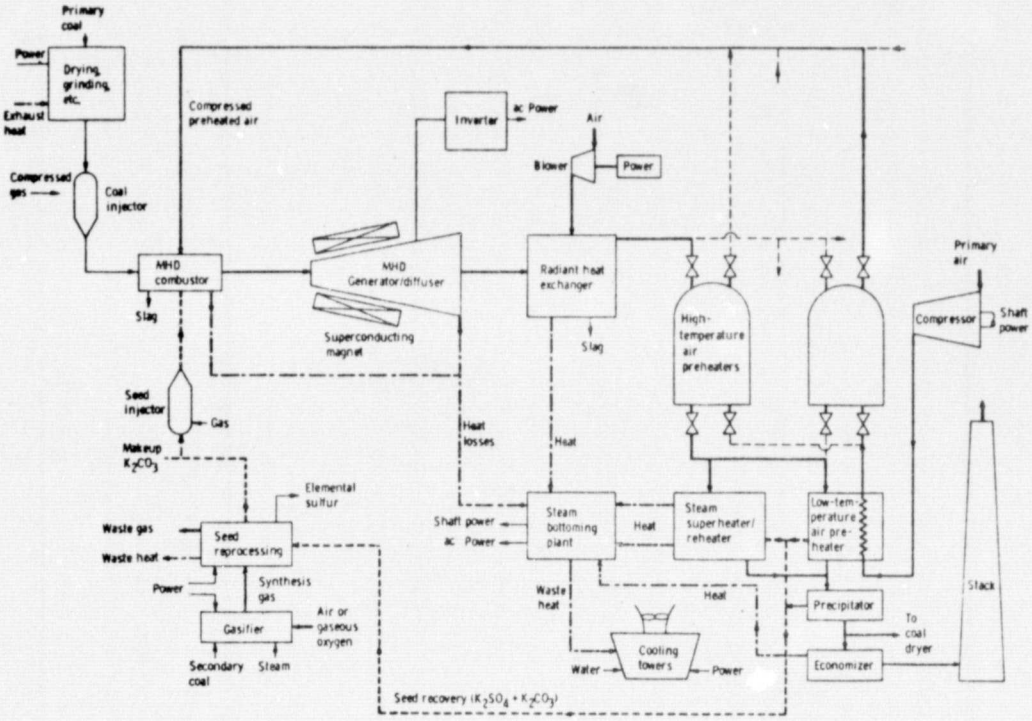

Figure 1. - Schematic diagram of open-cycle coal-fired MHD powerplant.

After leaving the radiant heat exchanger, the flow is conventionally assumed to enter a periodic refractory cored-brick regenerative heat-exchanger system that is used to provide the high-temperature air preheat. The G.E./Avco team assumed such a configuration and made use of a water-walled radiant heat exchanger designed by Foster Wheeler to provide heat to the steam bottoming plant. The Westinghouse team, on the other hand, assumed that a radiant high-temperature-recuperative-air-preheat heat exchanger could be constructed using superalloy tubes at its lower temperatures and silicon carbide tubes at the higher temperatures. Although interesting in concept, caution must be exercised because of the lack of any data on such a device.

General Electric splits the exhaust gases after they leave the high-temperature air preheaters, as illustrated in figure 1, to provide input into the low-temperature air preheater and the steam plant superheater and reheater. This is necessary in order to avoid a pinch-point problem. The low-temperature air preheater heats air to 1400°F. Westinghouse chose an alternative location for the low-temperature air preheater and used a radiant heat exchanger upstream of the high-temperature air heater.

The combustion products are taken through an electrostatic precipitator and the economizer before being exhausted via the stack. The alkali-seed compounds are recovered by collecting them both via the precipitator and via soot-blowing techniques from the various low-temperature heat exchangers. A small fraction of the hot exhaust may typically be diverted to a coal dryer which is in parallel to the plant economizer.

Since potassium can readily combine with any sulfur in the combustion products, it is predicted that such an MHD plant could meet sulfur oxides (SOX) emission standards even using high-sulfur coals as long as adequate seed is injected as either potassium carbonate or potassium hydroxide. To meet this requirement, a large fraction of the seed that is collected as potassium sulfate must be processed in a seed-reprocessing plant to remove the sulfur. Although the concept described is an attractive method of eliminating SOX emission from such power plants, operation of the seed reprocessing plant does pose a significant performance penalty for high-sulfur coal, reducing overall efficiency by approximately 3 percentage points. Seed reprocessing is discussed in more detail later in this section.

Some of the components that are unique to MHD cycles are estimated to be particularly costly. The three most costly are, the high-temperature air preheaters, the inverter system, and the superconducting magnet system. Other components which may be costly are the low-temperature air heater, the primary steam heat exchangers, (the radiant furnace and the superheater/reheater), the steam generator/turbine, the coal processing and injection equipment, and the seed reprocessing system.

For typical cases, approximately two-thirds of the net electrical output of an MHD plant is from the MHD generator. The steam bottoming plant is sized to have a gross output approximately one-half of the net cycle power. Part of this steam turbine power is used to drive the air compressors for the MHD topping cycle.

Results of Analysis

Figure 2 summarizes the Task 1 and 2 overall efficiency and cost of electricity results for 2000-MWe open-cycle MHD plants with steam bottoming cycles. Only plants that use direct high-temperature air preheaters and either Illinois #6 or SRC are shown in this figure. Other cases are discussed in references 1, 2, and 3.

On the top of the figure, at high cost of electricity, are the G.E. Task 1 Base Case 1 coal-fired plants. At the bottom of the figure at relatively low cost are the Westinghouse Base Case 2 direct coal-fired plants. Clearly there are significant differences in terms of cost of electricity between the two sets of results. The G.E. Task 2 point is also at the lower cost level. The cause of these differences is discussed later in terms of how the cost breaks down for representative points.

The agreement between the contractors in terms of efficiency is very good. Both teams show that direct-coal-fired MHD plant efficiencies in the neighborhood of 50 percent (coal pile to bus bar) can be obtained. Even closer agreement than is apparent in figure 2 was obtained by the contractors. This is also discussed later in terms of representative points.

Other types of Task 1 plants shown in figure 2 are the G.E. Base Case 2 solvent-refined coal-fired plants, the Westinghouse Base Case 1 direct-plus-indirect-preheat-coal-fired plants, and the Westinghouse Base Case 3 plants fired by the gas from an integrated LBTU fluidized bed gasifier.

Discussion and Assessment

Three general categories of specific cases are summarized in figure 2. These categories are based upon the relative heat-exchanger technology required. The four points that are solid are judged to be well within present heat-exchanger technology: 2000°F for slag- and seed-laden flows and 2500° to 2600°F for relatively clean flows. The four points that are half solid form a second category. These are judged to require heat exchangers that significantly exceed present technology: 3100°F for dirty flows and 3500° to 3600°F for relatively clean flows. The remaining points are judged to be within or at least only slightly exceeding present heat-exchanger technology.

As indicated in figure 2, for different systems and contractors, different parameters were varied in Task 1. The only type of plant studied in common by both contractors was the direct-coal-fired type. Westinghouse varied the coal moisture

REPRODUCIBILITY OF THE ORIGINAL PAGE IS POOR

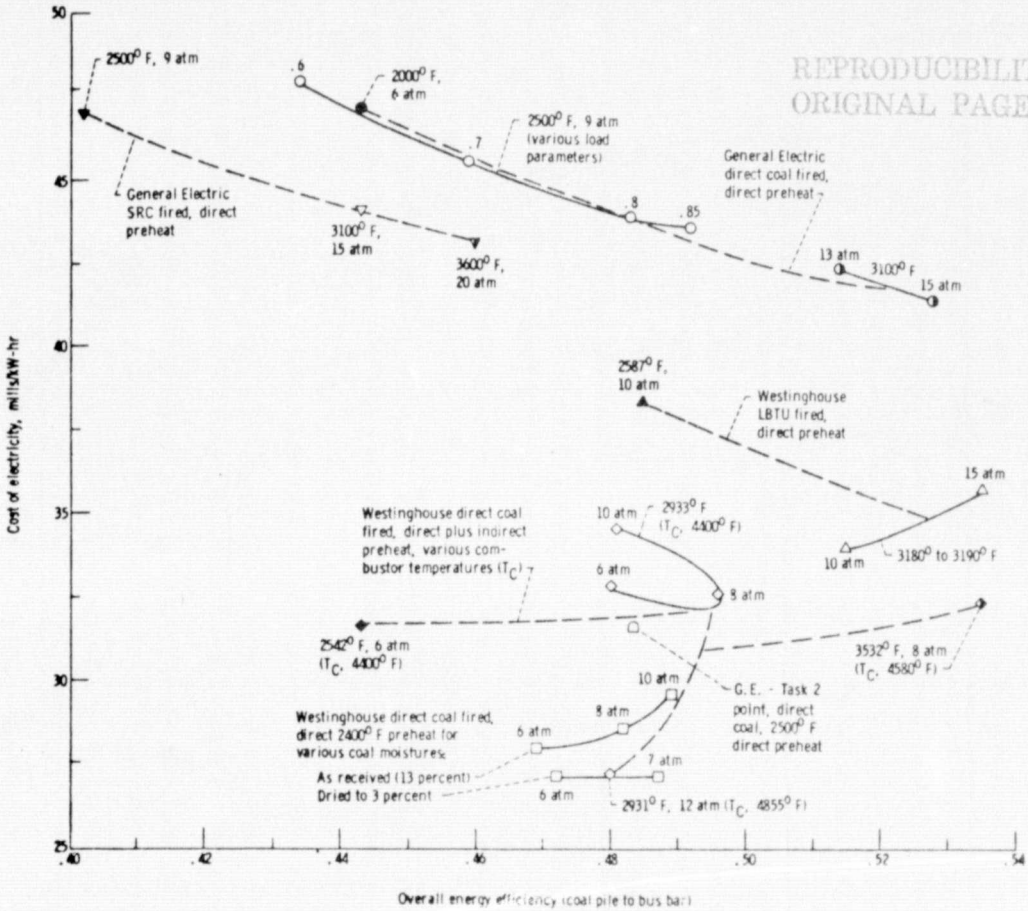

Figure 2. - Comparison of direct-preheated 2000-MWe open-cycle MHD powerplants. Preheat temperature and combustor pressure are indicated. Data for Task 1 and 2 are shown.

and pressure at a preheat temperature of 2400°F. Their results show the desirability of drying the coal from the 13 percent as received moisture level (Illinois #6) to 3 percent and demonstrate that there is a pressure level that minimizes cost of electricity. There is also a pressure level that would maximize efficiency, but the range of parametric variations was not sufficient to define the value.

The G.E. direct-coal-fired cases examined the effect of generator electrical loading for a 9-atmosphere combustion pressure and a preheat temperature of 2500°F. They also examined the effect of varying preheat temperatures at pressure levels that were judged reasonable. All the G.E. cases were for coal dried to 2 percent moisture.

The results show that the efficiency is very sensitive to the generator loading, the ratio of the generator voltage to its open-circuit value. A load parameter of 0.8 to 0.85 appears desirable for the case studied. In the Westinghouse study, a variable rather than a constant loading parameter was used; they assumed a loading parameter at the MHD channel inlet of 0.82, which varied down to a value of 0.7 at the channel exit.

The G.E. Task 2 plant is also direct-coal-fired with direct 2500°F preheat and 0.8 load parameter. It has been modified from the similar Task 1 point to lower cost and improved efficiency. No net efficiency improvement was, however, obtained because performance increase resulting from using split economizers to improve steam bottoming plant was offset by larger estimated energy requirements for seed reprocessing. This will be discussed more fully in the comparison of representative systems section.

The G.E. Task 1 data also show that efficiency is a strong function of preheat temperature. The 2000°F and 3100°F cases are all for a generator loading parameter of 0.8. Also indicated in the data is the desirability of raising combustor pressure with the preheat temperature.

A large range of efficiency and cost is shown for Westinghouse's direct-plus-indirect-preheat-coal-fired cases. Generally, the data show that the direct-plus-indirect-preheat concept may offer potential for small performance improvements over the direct-preheat-coal-fired case. The economic penalties associated with this more complex system having two series high-temperature heat-exchanger trains would, however, reduce interest in further consideration of this direct-plus-indirect-preheat concept. Of particular interest is the curve of various pressures for which the combustor temperature was maintained at 4400°F by diluting the combustor air with stack gases before it was compressed and preheated to 2933°F. This curve is of particular interest to Westinghouse since they feel that the use of their ceramic-line cyclone combustor design philosophy is uncertain when the combustor temperature exceeds the 4400° to 4500° range. For the lower pressure levels and lower preheat temperatures of the direct-preheat-coal-fired Westinghouse cases, this is not felt to be a problem since combustor temperatures are in the 4400° to 4500°F range.

The G.E./Avco team assumed a significantly different combustor design philosophy. The Avco concept is more advanced. Their approach utilizes concepts more familiar to rocket technology than present coal-burning technology. The G.E. coal-fired systems had combustion temperatures in the 4600° to 4700°F range.

As indicated in figure 2, the Westinghouse LBTU-fired plants appeared to offer the highest efficiency potential. These plants remove the sulfur from the Illinois #6 coal in their integrated fluidized bed gasifier. As a result, they are not forced to pay the large energy requirement that the direct-coal-fired plants must pay to remove the sulfur in a seed-reprocessing plant. The only type of seed reprocessing that has been considered in ECAS are plants that produce elemental sulfur. Future studies should consider alternative configurations that would not produce elemental sulfur and would have a much lower penalty for seed reprocessing.

Although Westinghouse does estimate that the cost of electricity for the LBTU-fired cases will be above the cost for the direct-coal-fired cases, caution should be exercised. As shown in reference 3, Westinghouse tends to be significantly higher in its cost estimates for both magnets and high-temperature heat exchangers than either G.E. or Burns and Roe's subcontractors. The capital cost of the Westinghouse LBTU-fired cases is dominated by the combined cost of the high-temperature heat exchangers and the magnets, which comprises approximately 60 percent of the major component cost.

Parametric studies for LBTU-fired plants consisted of only three cases and some power level variations. Since no previous gasifier plant studies were available on which to base parameters of cases selected for study, these cases may be far from optimum. The Westinghouse studies did, however, indicate that LBTU gas may be a marginal MHD fuel because of its low heating value. Any additional studies should consider the possibility of using oxygen enrichment of the air for either the gasifier or the MHD combustor or both. The effect of oxygen enrichment would be (1) to cut the mass flow of the gas to be preheated and thus reduce the preheater cost; (2) to increase the combustor temperature, which in turn would increase the average MHD channel power density and lower the magnet cost; and (3) to slightly lower the required preheat temperatures.

The G.E. studies of solvent-refined-coal-fired plants showed that, because of its high-BTU content, SRC is an excellent MHD fuel. The power plant efficiencies for the SRC-fired cases range from 52 to 59 percent, but because of the energy losses associated with producing the fuel from coal, the overall energy efficiencies range from only 40 to 46 percent. The cost of electricity for the SRC-fired plants is, however, estimated in Task 1 by G.E. to be competitive with the coal-fired plants. The SRC-fired plants have higher fuel cost but lower capital cost than the coal-fired plants; therefore, in any future studies, particularly of peaking MHD systems, fuels such as SRC deserve further consideration.

Before discussing the results for representative points, a few general observations are warranted. Detailed analysis of the MHD generator is important for two reasons: first, to

determine what level of isentropic efficiency can be obtained when the heat losses and friction are included; second, to determine the size of superconducting magnet required for the MHD generator.

The Westinghouse channel calculation and the core flow portion of the Avco channel calculation were checked with NASA's own channel program. In both cases the agreement was within 5 percent. Avco considered all of the important unavoidable channel loss mechanisms, that is, boundary layers, voltage drops, heat transfer, and friction. They found that approximately 8 percent of the power generated was lost due to these factors. Westinghouse did not calculate these losses, but on the basis of their prior experience assumed them to be 10 percent. NASA therefore concludes that the two calculations are consistent to within 5 percent and realistically predict channel sizes within limitations of ones ability to extrapolate the presently available "small" channel experiments to large-scale power-plant designs.

Considerations having to do with the MHD combustor system primarily deal with the question of how much slag can or should be rejected directly from this system. This in turn is connected with questions having to do with seed-slag solubility and how well the seed and slag can be separated by the differences they have in temperatures of condensation and solidification. Many believe that some slag will be required in the MHD generator to replenish the electrodes in order that long operating life channels can be obtained. It is uniformly recognized that recuperative and regenerative heat exchangers will not be tolerant of large slag carryovers. Therefore, a high fraction of slag must be removed before the flow enters these components.

If the combustion gases are to be cooled to a low temperature before entering the stack, this must be accomplished in the economizer since it is the lowest temperature heat exchanger in the system. As a result, there is a trade-off between regenerative feedwater preheating in the steam bottoming plant and the economizer exit temperature. In the G.E. Task 2 study, use of multiple economizer sections with additional regenerative feedwater heating between the economizer sections was used to minimize this problem.

Since a plasma MHD generator produces its electrical output from a large number of electrically isolated electrode pairs, this poses some special consideration on the inverter system. Of particular note is the necessity of costly protection of the inverter system from potentially large short-circuit currents, even though it is designed to operate near open-circuit voltage. This is discussed in more detail in reference 3.

Comparison of Representative Systems

This section compares three similar direct-preheat coal-fired systems on the basis of performance, capital cost, and cost of electricity.

Performance. In general the performance results of the two contractors for the direct-coal-fired cases are quite close. A comparison is displayed in Table 2 for Westinghouse Base Case 2, point 17 and the General Electric Task 1 Base Case 1 and Task 2 plants. These cases are shown because they are closest in terms of power level, preheat temperature, MHD generator inlet pressure, and fuel. All use Illinois #6 coal dried by exhaust gases prior to combustion. Westinghouse assumed coal dried to 3 percent moisture, and General Electric assumed coal dried to 2 percent moisture. Westinghouse used 95 percent of stoichiometric air input to the combustor, and General Electric used 93 percent of stoichiometric air. In both cases the secondary air to complete combustion was injected into the gas stream in the component downstream of the diffuser.

The thermodynamic efficiencies obtained by the contractors, shown near the bottom of the table, are nearly the same for Task 1 but a point higher for G.E. Task 2. Ordinarily it would be expected that the General Electric results, with slightly higher MHD inlet temperature and pressure, would have a higher efficiency than the Westinghouse result. As shown, the efficiency of the MHD part of the cycle (defined here as inverter output minus compressor power requirement divided by combustor thermal input) is higher for the General Electric cases. However, in Task 1 Westinghouse used a higher steam-cycle efficiency, which in this case compensates for their lower topping-cycle efficiency. This is also reflected in the power split between the MHD topping cycle and the steam bottoming cycle. With a lower MHD topping cycle efficiency, more heat is available to the steam bottoming cycle in the Westinghouse case. This together with the higher steam-cycle efficiency results in more steam turbine-generator power output for the Westinghouse case. As shown for Task 1 in the table, 53 percent of the total output power is attributable to the MHD topping cycle for the General Electric case; for the Westinghouse conditions, only 45 percent of the total power is due to the MHD topping cycle. In Task 2, G.E. used a steam-cycle feedwater heater arrangement which resulted in higher efficiency, 42 percent; this reduced the faction of the total power due to the MHD topping cycle to 52 percent.

As mentioned earlier, both contractors used a 3500 psi/1000°F/1000°F steam cycle. Westinghouse analyzed the system assuming all exhaust gas to steam heat exchangers are downstream of the combustion air preheaters. They used a steam cycle with 42 percent efficiency. General Electric analyzed a configuration that included a radiant steam boiler section downstream of the diffuser, followed by the high-temperature air heater, then the steam superheater/reheater section and the low-temperature air preheater, and finally an exhaust gas to feedwater economizer. They used a steam cycle in Task 1 with regenerative feedwater heating to 232°F, which results in a 40 percent cycle efficiency. In analyzing the system in Task 2 of ECAS, General Electric considered a steam cycle with more regenerative feedwater heating by using a split economizer which allowed additional regenerative feedwater heating to be used between the high and low-temperature economizers. In this way a 2 percentage point higher steam-cycle efficiency was attained while the exhaust gases were still reduced to the desirable stack inlet temperature of about 300°F.

The difference between the thermodynamic efficiency and the overall energy efficiency shown in the table is due to the effects of plant auxiliary power and seed-processing requirements.

REPRODUCIBILITY OF THE ORIGINAL PAGE IS

The thermal inputs for seed processing are shown in the table in terms of coal-thermal input required to produce the carbon monoxide and hydrogen used in processing the seed. Westinghouse used an on-site intermediate-BTU (IBTU) gasifier, while General Electric assumed the use of over-the-fence LBTU gas in Task 1 and IBTU gas in Task 2. As shown in the table, the Westinghouse approach required a little over 5 percent of the total thermal input for seed processing coal, but in the General Electric approach the 5.9 percent required in Task 1 increased to 7.8 percent upon more detailed examination in Task 2. The difference between contractors is in part due to the difference in gasifier type and is associated with locating it on or off site. The difference in gasifier location also affects the comparison of plant auxiliary power requirements. Of the 62 MWe shown for the Westinghouse case, 14 is required for the oxygen production for the IBTU gasifier. Without this power the Westinghouse auxiliary power requirements would have been 2.4 percent of the gross plant output (rather than the 3.1 percent shown in the table) and would have been slightly lower rather than slightly higher than the 2.8 and 2.5 percent required, respectively, in the General Electric Task 1 and Task 2 cases.

The ratio of auxiliary power required to gross plant power (or the ratio of seed processing coal to total coal) is equal to the percentage loss in efficiency due to the auxiliary requirement. The product of this ratio and the thermodynamic efficiency is then approximately equal to the loss in percentage points due to this requirement. The auxiliary power requirements account for about 1.6, 1.5, and 1.4 percentage points loss in efficiency for Westinghouse and General Electric Task 1 and 2, respectively. The losses due to seed processing are about twice as high, about 2.8, 3.1, and 4.2 percentage points, respectively, for the same Westinghouse and General Electric cases.

Capital Cost. Table 3 shows a comparison of the capital cost distributions for the representative MHD plants. The total direct materials costs (the sum of the cost of the major components and other materials) is slightly higher for G.E. Task 1 than for Westinghouse or G.E. in Task 2.

For the unique MHD components, Westinghouse has higher costs for two of the three most expensive major components: the high-temperature preheater system and the magnet system. In Task 1, General Electric had higher inverter system costs even though both contractors base their estimates on essentially the same technology bases. This resulted from their use of a Faraday generator with a large number of independent relatively low power loads. The Westinghouse study used some external diagonal connections to lower their inverter costs. G.E., in Task 2, used a diagonal wall generator with few loads to significantly reduce inverter system cost.

In reference 3 the costing of MHD inverters, MHD superconducting magnets, and high-temperature heat exchangers is discussed in a common components sub-section of the open-cycle MHD system section. In summary, there is general agreement on costing inverters. Cost estimates for superconducting MHD magnetics by Magnetic Corporation of America (MCA) and G.E./Avco are in good agreement, but Westinghouse's estimates are approximately a factor of two higher. Cost estimating methods for refractory-cored-brick high-temperature regenerators by FluiDyne and G.E./Avco are in general agreement except for basic cost per pound of the refractory brick for direct-preheat-coal-fired cases. G.E./Avco estimates the brick cost for these cases to be 25¢/lb. FluiDyne judges that higher quality refractory brick will be required for these direct-coal-fired systems and estimates a brick cost of $1.15/lb. As a result the overall high-temperature-preheater cost estimates of FluiDyne are double those of G.E./Avco. The Westinghouse studies assumed a silicon carbide and superalloy recuperator which was estimated to be approximately 25 percent higher in cost than the FluiDyne regenerator estimates.

In some of the other less expensive components including the coal-handling system, the MHD combustor, and the MHD generator, G.E. has higher costs. The overall G.E. Task 1 materials and labor costs are higher, primarily because substantially larger costs for balance of plant were estimated by G.E.'s architectural engineer, Bechtel. This balance of plant includes all material and labor for plant construction after the major components have been delivered to the site. In Task 2, the G.E. team was able to re-examine the plant layout with an effort to reduce cost and was able to substantially lower the balance-of-plant cost.

Although both contractors give reasonable detail in their Task 1 breakdown of cost, each uses their own system of breaking down and categorizing cost. It was, therefore, not possible to make a detailed item-by-item cost comparison between the contractors. For the level of detail examined in Task 1 of ECAS, the total direct-cost comparison for the two contractors is reasonably good.

In Task 2 a significantly greater level of detail was provided by the contractors. Table 4 shows, for the Task 2 MHD plant, the installed cost for the nine components with a cost greater than $10/kWe. The sum of these nine components comprises approximately one half of the total direct-plus-indirect plant costs. These component costs show the expected large reduction in the inverter cost (almost a factor of two lower than the Task 1 results), but also show that the low-temperature air heater and radiant furnace have increased significantly (a factor of 3 to 4 higher than their Task 1 values). The low-temperature air heater has become the most expensive component in the system. Altering the cycle to reduce the cost of this air heater may be possible.

In calculating total capital cost from the total direct cost, the two contractors have major differences in procedure (as discussed in the previous section on study ground rules). To calculate escalation and interest, both contractors estimated the construction time of the Task 1 plants to be 7 years. G.E. in Task 2 refined its construction time estimate to 6.5 years.

Cost of Electricity. Table 5 shows a comparison of the cost of electricity for the three direct-preheat-coal-fired-open-cycle MHD plants. The capital charges are higher for G.E. because of their higher capital cost. The total fuel charges are also higher for G.E. because they used over-the-fence higher cost gas to operate their

seed-processing plants, and this was included in the fuel charges. The operating and maintenance (O and M) charges were also higher for G.E. since they included additional costs above the normal steam plant maintenance charges for portions of the MHD plant. In Task 1, the increase to O and M cost used by G.E. was equal to 20 percent per year of the initial capital costs of the MHD generator, diffuser, combustor, slagging boiler, and high-temperature air preheaters. These additions, however, did not significantly raise the O and M. Upon a more detailed examination in Task 2, G.E. determined that the O and M should be reduced as indicated in Table 5. Westinghouse's O and M charges were essentially equivalent to those for their steam plants. As indicated in the table, the total effect of the difference in costing between G.E. and Westinghouse causes G.E.'s estimated cost of electricity to exceed Westinghouse's by approximately 50 percent for Task 1. The cost of electricity for the Task 2 G.E. plant is in relative close agreement with the previous Westinghouse result if one takes into account the increase in fuel and labor costs between Tasks 1 and 2 and escalation associated with the change of one year in the base year of the plants.

IV. Closed-Cycle, Inert-Gas Magnetohydrodynamic Systems

Summary of Results

This study represents the first serious attempt to mate the closed-cycle, inert-gas MHD system with fossil-fuel-fired heat sources for utilities application. Since there was no data base of results from previous studies, a variety of power plant configurations were considered, and some of the initially chosen configurations did not result in attractive systems. The contractors differed in both the power-plant configurations considered and in their approach to evaluating the systems performance. The initial configurations chosen in the G.E. study were an MHD topping cycle using a clean over-the-fence fuel and a direct-coal-fired parallel cycle. The majority of the clean-fuel cases used solvent-refined coal with a conversion efficiency of 78 percent. As the study progressed, G.E. added two direct-coal-fired MHD topping cycles.

The MHD topped steam cycle was the only configuration considered by Westinghouse. The fuel used in the majority of cases was a low-BTU gas derived from an on-site gasifier that was closely coupled. Westinghouse evaluated the system performance by doing efficiency calculations for a wide range of generator parameters and then optimizing the thermodynamic efficiency for a given generator inlet temperature. The costs were then calculated for these optimum efficiency points. The costs were not optimized however.

Besides the different power-plant configurations considered, variations in coal type, generator inlet temperature (2400° to 3800°F), generator inlet pressure (10 to 20 atm), generator turbine effectiveness (0.6 to 0.8), and power level were also studied.

The G.E. results for the parallel cycle and the clean over-the-fence fuel MHD topping cycle indicate that these are not attractive systems. The overall energy efficiencies for the parallel cycle ranged from 35.2 to 39.1 percent, the capital costs varied from $1654/kWe to $1886/kWe, and the COE from 66 to 73 mills/kW-hr. The power plant efficiencies for the clean-fuel MHD topping cycles are much higher (35 to 46 percent), but the overall energy efficiencies are from 26.4 to 35.9 percent when the coal-to-clean-fuel conversion efficiency is considered. The capital costs and COE range from $1300/kWe to $1535/kWe and from 58 to 66 mills/kW-hr for this configuration. The COE's for the above systems are 2 to 2.5 times that of the G.E. advanced steam cases. The best G.E. results were obtained for the direct-coal-fired MHD topping systems. Two of these cases were considered. The first case, with an inlet temperature of 3000°F, an MHD generator adiabatic efficiency of 0.7, and magnetic field strength of 3.5 tesla, resulted in an overall energy efficiency of 41.8 percent, a capital cost of $1551/kWe, and a COE of 61.6 mills/kW-hr. An iteration made on this configuration, in which temperature is 3121°F, MHD generator adiabatic efficiency is 78 percent, magnetic field is 4.5 tesla, and the power-plant layout was considerably modified, improved the efficiency, capital cost, and COE to 46 percent, $1109/kWe, and 45.6 mills/kW-hr, respectively. At the request of NASA, the effect of pressurizing the combustion system of the above case was investigated by General Electric. Pressurization of the combustion system to 4 atmospheres was found to change the efficiency, capital cost, and COE to 47.4%, $1015/kWe and 42 mills/kw-hr, respectively.

The Westinghouse overall energy efficiencies for the LBTU gasifier configuration were 46.1 percent at an inlet temperature of 3800°F and 42.2 percent at 3100°F. This includes an effective efficiency of the gasifier/combustion loop combination of about 79.6 percent. The capital costs and COE at 3800°F range from $2228/kWe to $2434/kWe and from 77 to 85 mills/kW-hr. At 3100°F, the capital costs were $1912/kWe and the COE was 68 mills/kW-hr.

There are no unresolvable differences between the G.E. and Westinghouse efficiencies. However, the Westinghouse capital costs for a nearly equivalent system were approximately $400/kWe higher than G.E.'s. This difference is mainly due to the differences in the costs of the refractory regenerative heat-exchanger system. Their COE could probably be reduced to approximately 44 mills/kW-hr by using a more compact heat-exchanger system.

The best configuration considered was the direct-coal-fired MHD topping cycle using a pressurized combustion system with an overall energy efficiency of 47.4% and a COE of 42 mills/kw-hr. The LBTU gasifier cases have lower efficiencies and generally higher costs than the direct-coal-fired systems at equivalent generator inlet temperatures. More closely integrating the gasifier, pressurizing the combustion loop, and optimizing the economics could significantly improve the initial results obtained for this configuration.

Power Plant Configurations

Three basic power-plant configurations were considered for this system: an MHD topped steam cycle, a parallel MHD steam cycle, and an all MHD recuperative Brayton cycle. A typical

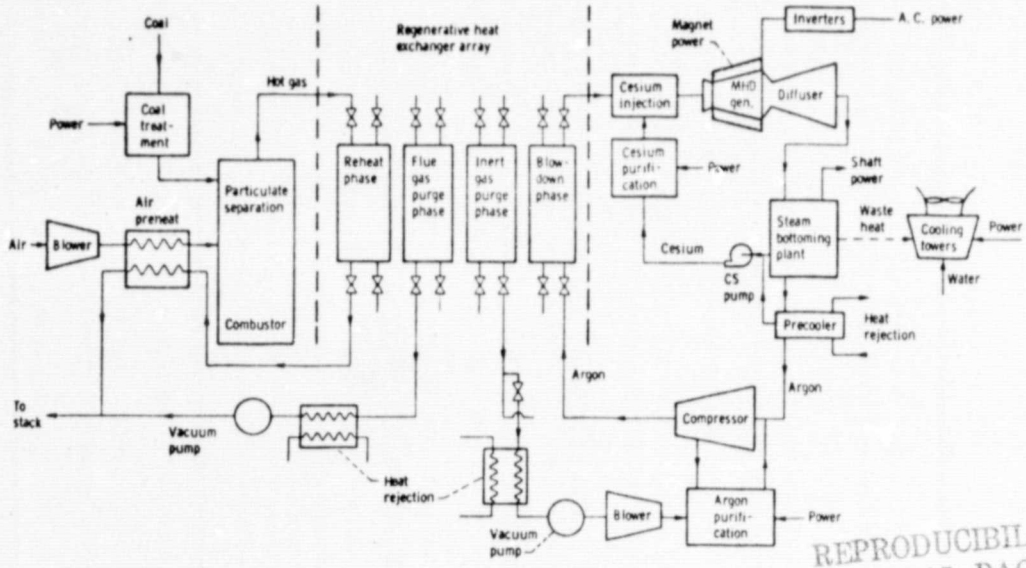

REPRODUCIBILITY OF THE ORIGINAL PAGE IS POOR

Figure 3. - Closed cycle inert gas MHD topping cycle.

schematic of a direct-coal-fired MHD topping cycle is shown in figure 3. In this system the coal is dried, pulverized, and combusted with preheated air in a combustor which has a 90% ash removal capability. The hot combustion gases then flow through the regenerative refractory heat exchanger array and the air preheater to the stack where they are cleaned and exhausted to the atmosphere. The refractory regenerative heat exchanger array transfers the combustion energy to the inert gas. In this array a given heat exchanger is first heated by the combustion gases (reheat phase) and then the residual combustion gases are evacuated (flue gas purge phase). The heat exchanger is then cooled by the flow of high pressure argon (blowdown phase), the residual argon is reclaimed (inert gas purge phase), and the reheat phase is begun again. At any instant some of the heat exchangers are in the reheat phase, others in the purge phase, and the rest in the blowdown phase thus supplying a continuous flow of energy from the combustion loop to the inert gas loop. Once the inert gas is heated, it is seeded with cesium, flows through the nozzle, MHD generator and diffuser, the steam boiler, and pre-cooler. The cooled argon is then compressed and returned to the heat exchanger array. The cesium is removed in the steam boiler and argon precooler, is purified, and then re-injected into the inert gas. A fraction of the inert gas is passed through a purification system and then returned to the main loop during each cycle.

General Electric considered the direct-coal-fired MHD topping cycle and topping cycles using clean-coal derived over-the-fence type fuels. These over-the-fence fuels were solvent-refined coal (SRC, conversion efficiency η_c = .70), an intermediate BTU gas (IBTU, η_c = 0.70), and a high BTU gas (HBTU, η_c = 0.50). General Electric also considered an all MHD recuperative Brayton cycle and an MHD steam parallel cycle in which a fraction of the combustion energy is transferred to a recuperative MHD cycle via a refractory heat exchanger array, and the remaining combustion energy is transferred directly to the steam boiler.

Westinghouse considered MHD topping cycles fueled by an LBTU gas supplied by an on-site gasifier incorporating a pressurized fluidized bed and hot gas clean-up. The gasifier is not integrated into the power plant, but is closely coupled in the sense that the power system benefits from the sensible heat of the fuel gas. The fuel conversion efficiency is therefore much higher than those for the over-the-fence fuels.

Both contractors used a 3500/1000/1000 steam plant. General Electric used a number of regenerative feedwater heating temperatures in their study. Final feedwater temperatures of 99°F and 232°F were used for their topping cycles and 510°F was used for the parallel cycles. The thermodynamic efficiencies of the steam plant at these levels of regenerative feedwater heating are 38, 40, and 45%, respectively. Westinghouse assumed a steam plant with a 45% efficiency. The level of regenerative feedwater heating was not given in their study.

Using these power-plant configurations, cases were run for a variety of coal types, generator inlet temperatures and pressures, inlet Mach numbers, turbine efficiencies, power levels, and cooling methods. The results are given in the next section.

Results of Analysis

Representative results for the various systems studied are presented in figure 4 in which the cost of electricity (COE) in mills/kw-hr is plotted versus the overall energy efficiency. A breakdown of the performance results and cost distributions for two representative cases are also given in Tables 6 and 7, respectively.

The areas identified on figure 4 delineate the results for the various system configurations or fuel types. The solid points represent the

results for the reference conditions listed on the figure and the identifications given for the other points represent variations about the reference conditions. The figure shows that the highest efficiencies are obtained for the General Electric direct-coal-fired cases and the Westinghouse LBTU closely-coupled gasifier cases. The General Electric SRC cases yield the lowest cost of electricity for the clean-fuel cases, but the overall energy efficiencies are quite low because of the .70 coal to clean-fuel conversion efficiency. The figure also shows that the parallel cycle concept and all MHD Brayton cycle are not viable concepts and that there are no benefits to be derived from using an over-the-fence LBTU gas. Considering the results for a given system configuration, the results on the figure indicate that increases in the overall energy efficiency are realizable at constant temperature if one can operate at higher values of turbine effectiveness (η_τ) of the MHD-generator-diffuser combination, or at constant, η_τ, if one can operate at higher temperatures. The results also show that operation at higher temperatures generally results in an increased COE. The results show that the best overall system is the General Electric direct-coal-fired topping cycle. The Westinghouse LBTU gas cases have equivalent efficiencies, but there is a large difference in costs.

TABLE 6. - PERFORMANCE RESULTS FOR CLOSED CYCLE INERT GAS MHD POWERPLANTS

	General Electric case 102	Westinghouse case 6
Power output, MWe	930	962
Coal type	Illinois #6	Illinois #6
Coal conversion process	Direct combustion	LBTU
Effective furnace efficiency	0.865	0.796
MHD inlet temperature, °F	3120	3100
MHD inlet pressure, ATM	10	10.8
MHD inlet Mach number	1.5	0.9
Isentropic efficiency	0.78	0.68
Steam bottom plant efficiency	0.38	0.45
MHD power output, MWe	1000	989
Compressor power, MWe	455	648
Net steam poweroutput, MWe	0	11
Auxiliary power requirements, MWe	70	38
Thermodynamic efficiency, η_t	55.9	55.1
Powerplant efficiency, η_{pp}	46	42.2
Overall energy efficiency, η_{oA}	46	42.2

TABLE 7. - CAPITAL COST DISTRIBUTION AND COST OF ELECTRICITY FOR CLOSED CYCLE INERT GAS MHD POWERPLANTS

	General Electric case 102	Westinghouse case 6	NASA modification of Westinghouse case 6
	Capital cost, $/kWe		
Direct cost:			
Major components and balance-of-plant materials	375.3	680.0	391.2
Direct site labor	75.3	150.0	105.1
Indirect site labor	67.8	76.5	53.6
Architect and engineering services	46.2	65.4	39.7
Subtotal	564.6	973	589.7
Contingency	112.9	91.3	54.6
Escalation	193.7	372.6	225.5
Interest	238.7	474.4	287.3
Total	1109.9	1912	1157
	Cost of electricity, mills/kW-hr		
Capital	35.1	60.5	36.6
Fuel	6.3	6.8	6.9
Operation and Maintenance	4.2	1.2	1.2
Total	45.6	68.5	[illegible]

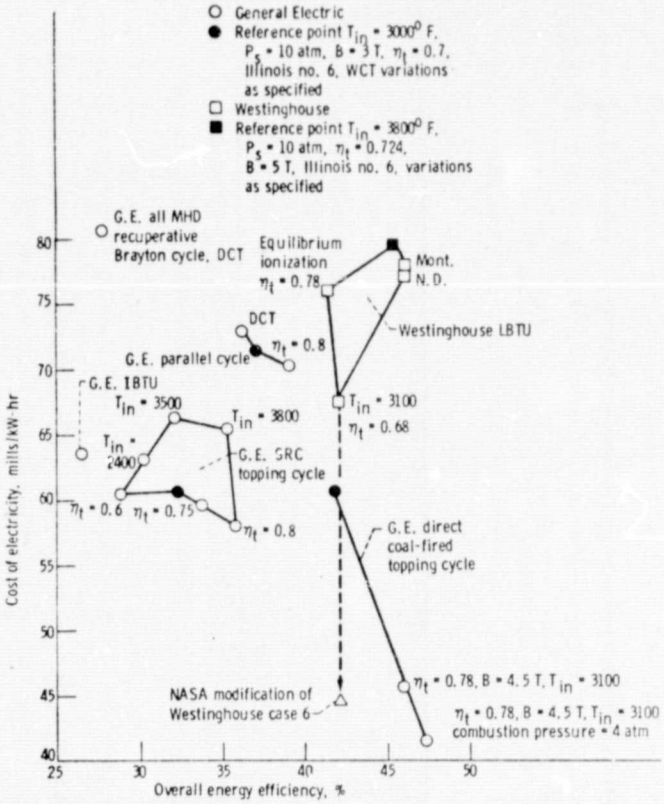

Figure 4. - Cost of electricity versus overall energy efficiency for closed cycle inert gas MHD systems.

Discussion and Assessment

The performance and cost results for two representative cases (General Electric Case 102 and Westinghouse Case 6) are given in Tables 6 and 7, respectively. These cases were chosen because of their comparable power levels and generator inlet temperature.

The data in Table 6 indicates that the thermodynamic efficiencies are about equal even though the generator-diffuser isentropic efficiencies are different. These differences are reconciled in reference 3. Westinghouse's assumed higher steam plant efficiency and waste heat recovery were found to compensate for General Electric's higher isentropic efficiency. Westinghouse was able to operate at the optimum pressure ratio and still obtain a net power output from the steam plant. The steam plant used by General Electric was selected to supply the required compressor power; this resulted in operation at a pressure ratio below the optimum. The different auxiliary power requirements and effective furnace efficiencies are the cause of the overall energy efficiency difference.

The capital cost distribution and cost of electricity for these cases are compared in Table 7. Results for a NASA modification of Westinghouse Case 6 are also presented and will be discussed presently. The data listed show a large difference in costs of major components and materials of construction, and direct labor between the contractors. A detailed breakdown of these costs[3] has shown that the major difference is in

the refractory heat exchanger systems. The Westinghouse heat exchanger system is a clean fuel system incorporating 56 units and a matrix hole size of $2\frac{1}{2} \times 2\frac{1}{2}$". The materials and labor costs are $\$417 \times 10^6$ or $230,000 per megawatt thermal transferred to the inert gas. The use of such a large matrix hole size appears unwarranted for the clean fuel used in this case. In contrast to this approach, General Electric uses $\frac{1}{4}$" diameter hole sizes for their clean fuel heat exchangers and an equivalent system would incorporate 11 heat exchangers and would cost $36,000/$MW_{TH}$. In addition, a refractory regenerative heat exchanger was designed for a 1000-MWe, inert-gas MHD system as part of the NASA in-house ECAS program. This system was designed by FluiDyne under NASA contract with Burns and Roe[4]. The system consisted of 24 units and was designed with a 3/4-inch hole size for an argon outlet temperature of 3100°F. Estimated costs were $\$93.5 \times 10^6$ or $53,000/$MW_{TH}$. The Westinghouse costs are thus 4 to 6 times higher on a per MW_{TH} basis as two other estimates made for equivalent heat exchanger systems. The results of calculations made to determine the effect of using the FluiDyne heat exchanger system in Westinghouse Case 6 are shown in Table 7. The results show that the capital costs are reduced to $1157/kWe and 44.7 mills/kw-hr and are comparable to the General Electric costs.

The data in Table 7 also shows that there is a difference in operation and maintenance costs. The operation and maintenance costs used by Westinghouse seem unduly low, however, considering the power-plant complexity. The costs are about the same or even lower than those for an advanced steam plant. The detailed Westinghouse data indicate that operation and maintenance costs were included only for such items as the gasifier, the coal and waste handling systems, and the heat rejection system, with no estimate included for the components unique to MHD. General Electric, on the other hand, did include a factor for the MHD generator diffuser and the refractory input heat exchangers.

Now let us consider the direct-coal-fired cases which yielded the best results for the closed-cycle inert-gas MHD systems. The data on figure 4 shows that there is a significant difference between the reference point and the two variations considered. There were a number of changes that contributed to this improvement in performance. In order to assess the full potential of these systems, the generator inlet temperature was increased to 3100°F and the turbine effectiveness to 0.78. The pressure drops in the combustion loop and argon loop were lowered to 9 and 7.5%, respectively. In addition to these changes, significant cost reductions were also obtained by modifying the plant layout. The more important modifications were:

(1) To reduce the plant size by shortening the MHD generator and diffuser by a factor of about 3. This allowed vertical mounting of these components instead of horizontal mounting.
(2) To reduce the number of large (greater than 10 ft. diam.) ducts by rearranging the overall plant layout.
(3) To redesign the heat exchangers and to compute the cost of the bricks separately for each operating condition.
(4) To increase the average magnetic field from 3 tesla to 4.5 tesla.
(5) To remove all feedwater heating from the steam plant.

The change in the steam plant regenerative feedwater heating level lowers its efficiency by ~ 2 percentage points, but the overall system efficiency is increased because the argon waste heat is recovered to a lower temperature.

These modifications resulted in an overall energy efficiency of 46% and COE of 45.6 mills/kw-hr.

The final variation was to pressurize the combustion system to 4 atmospheres using a balanced gas turbine-air compressor set. This change resulted in lower costs, because the number of heat exchangers and size of the combustion gas ducts was reduced and increased efficiency because the furnace efficiency is increased and the auxiliary power requirements are reduced.

It is anticipated that further study of this system would result in lower costs and perhaps higher efficiencies. For example, the capital costs could be lowered by $52/kWe by incorporating the three terminal MHD generator power output connections used for the open-cycle MHD systems in Task 2. This change greatly reduces the system's inverter costs.

The realization of these systems requires the development of direct-coal-fired heat exchangers that operate at temperatures of 3100°F and highly efficient MHD generators. The .78 turbine effectiveness (which includes the supersonic diffuser loss) used in the best direct-coal-fired cases is quite optimistic and requires the suppression of plasma turbulence (plasma turbulence factor = 0.2). This problem may be somewhat alleviated, however, at subsonic Mach numbers. The Westinghouse results show that the optimum performance is obtained at M = 0.9.

The poor results for the clean over-the-fence fuel cases indicate that if one wants to consider alternatives to the direct-coal-fired approach or to take advantage of the higher efficiencies attainable at higher temperatures, a coal-to-clean-fuel conversion system must be incorporated into the power plant.

The Westinghouse cases treating an on-site closely-coupled LBTU gasifier represent an initial evaluation of this concept. The situation is similar to that when General Electric had obtained their initial results for the direct-coal-fired system. There is considerable potential for improvement. Westinghouse calculated high thermodynamic efficiencies, but the overall energy efficiencies are considerably lower because of the .796 effective furnace efficiency of their heat input system. The cost of electricity was also prohibitively high. In order to assess the full potential of this concept, the LBTU gasifier must be fully integrated with the power plant. Results obtained in the ECAS combined-cycle turbine cases indicate that careful integration of the gasifier with the power plant could result in effective furnace efficiencies of .88-.89. In addition to the potential increase in the efficiency of the heat input system, the ability to use low-grade heat to generate steam for the gasifier gives one more flexibility concerning items such as the level of regenerative feedwater heating, use of compressor intercooling, etc., that can affect the prime

REPRODUCIBILITY OF THE
ORIGINAL PAGE IS POOR

cycle efficiency.

NASA estimates that a 35% reduction in the COE is possible by modifying their heat exchanger system. Further reductions could result from pressurization of the combustion loop and heat exchanger system.

With this potential for significant improvements in efficiency and reduction in costs, the closed-cycle inert-gas MHD system using a fully integrated LBTU gasifier should be looked at in more detail. It offers an attractive alternative to the direct-coal-fired cases, and perhaps the best potential for these systems lies in this concept.

V. Liquid-Metal Magnetohydrodynamic Systems

Summary of Results

The two-phase flow liquid-metal MHD (LMMHD) power cycle which uses an inert gas as the primary thermodynamic working fluid and a liquid metal as the electrodynamic fluid in the MHD generator was the only type of LMMHD system treated in this study. Temperature ranges from 1200-1500°F were considered and the working fluids were Ar/Na and He/Na in the 1200-1300°F range and Ar/Na and He/Li in the 1400-1500°F range.

The majority of cases studied by both contractors included the use of a binary LMMHD/steam cycle, the use of a steam cycle with little regenerative feedwater heating, and the use of pumps to recirculate the liquid metal. Cases were included, however, to determine the effect of eliminating the liquid-metal pumps.

Both contractors used modularized MHD generators that are operated hydraulically in parallel and electrically in series. The series connection is required to attain a reasonable voltage level for the inverters.

The contractors approach to the parametric variations differed somewhat. The majority of the Westinghouse cases used a cyclone combustor, Illinois #6 coal, a power level of approximately 1000 MWe, and various liquid-metal system parameters. The G.E. cases treated variations in combustors, fuels, and power level as well as some system parameters.

The overall energy efficiencies ranged from 33.6 to 37.3 percent for the 1200-1300°F temperatures and from 37 to 39.5 for the 1400-1500°F cases. The contractors costs differed significantly. For the lower temperature cases, the General Electric costs ranged from $1450/kWe-$2750/kWe and 77-93 mills/kw-hr. The Westinghouse costs were in the range $790/kWe-$1177/kWe and 33.9-46.2 mills/kw-hr.

At the 1400-1500°F temperatures, the General Electric costs were $2500-$3000/kWe and 92-100 mills/kw-hr; Westinghouse's were $1165-2140/kWe and 45-78 mills/kw-hr.

A detailed analysis of these costs showed major differences in nearly every item. Differences in the costs of some components such as the MHD generator, magnet, and inverters have been reconciled. However, there are still large unresolved differences in the contractors costs.

The highest overall energy efficiency obtained by the contractors at the temperature limits dictated by the present sodium technology (1200° to 1300°F) was 37.3 percent. Their results indicate that the maximum potential efficiency at these temperatures would be approximately 40 percent, because at these temperatures the liquid-metal MHD system cannot be effectively coupled to an advanced steam plant.

At the higher temperature considered in this study (1500°F), these problems may be alleviated. Westinghouse has calculated an overall energy efficiency of 43 percent by assuming that the sodium technology can be extended to 1500°F and that the system can be coupled to a 45 percent steam plant. The sodium vapor carryover could be a considerable problem at these temperatures. However, only a few of the higher temperature systems were considered by the contractors in this study, and the potential for improvement from better coupling with an advanced steam plant at higher temperature is indicated. Resolution of the large differences in cost estimates requires more detailed component design and plant integration optimization.

Power Plant Configurations

The basic power plant configuration studied was to use the two-phase LMMHD concept in a binary LMMHD/steam cycle. A typical schematic of this cycle is shown in figure 5. In this cycle the coal is dried and pulverized and combusted with preheated air in an atmospheric fluidized bed combustor with in-bed desulfurization. The exhaust gases flow through the electrostatic precipitator and air preheater after which part of the flow goes directly to the exhaust stack and the rest is diverted to the coal treatment system. The helium inert gas and sodium liquid metal are separately heated in the combustor and flow through the manifolding to the mixers. The gas and liquid metal are then mixed and the mixture enters the MHD generators as a foamlike substance. The expansion of the gas drives the liquid metal across the magnetic field and electric power is generated. The two phases are then separated and the sodium is pumped back to the combustor. The inert gas flows through the steam boiler and inert gas cooler, is then compressed, heated, and returned to the mixers. A distinctive feature of this system is that a number of MHD generators are used. They are operated hydraulically in parallel and electrically in series. The series connection is necessary to attain a reasonable voltage level for the inverters. It should also be noted that the steam reheat energy is supplied by the combustor.

General Electric used the atmospheric fluidized bed (AFB) in the majority of their cases. They also considered pressurized furnaces burning a LBTU gas supplied by an integrated gasifier or an over-the-fence HBTU gas, and a pressurized fluidized bed burning coal directly as alternative combustion systems. Westinghouse used a direct-coal-fired cyclone combustor in the majority of their cases.

Other variations in the basic power plant configuration include replacing the liquid-metal pumps with a more efficient nozzle-separator-diffuser and an all LMMHD system in which the steam plant is replaced by a recuperative heat exchanger and gas turbine.

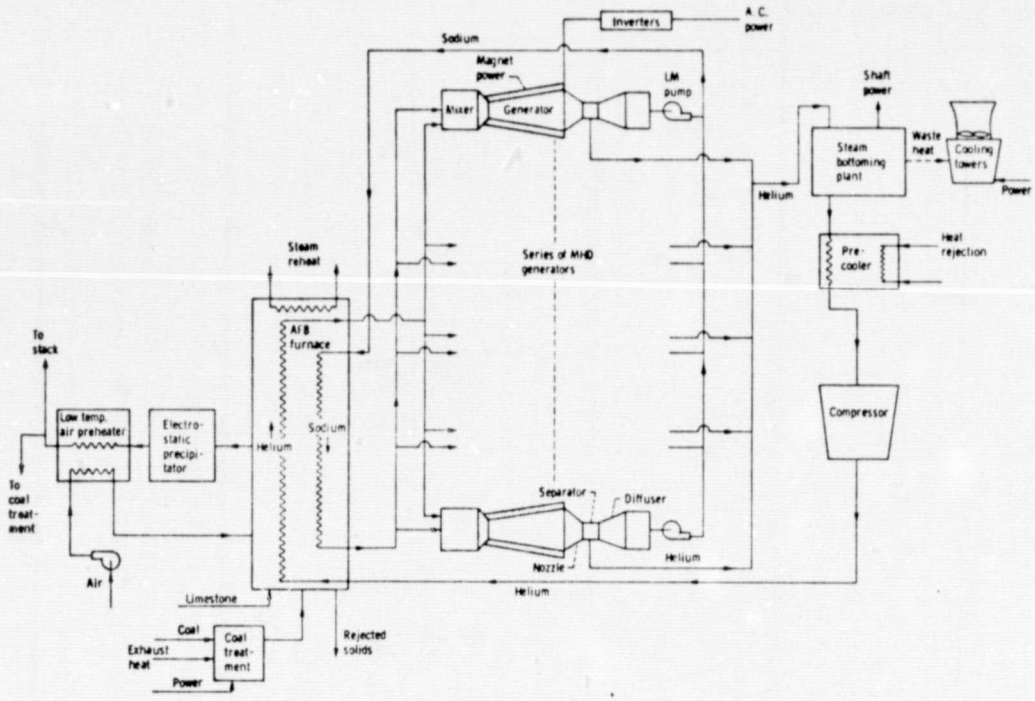

Figure 5. - Closed cycle liquid metal MHD topping cycle.

REPRODUCIBILITY OF THE ORIGINAL PAGE IS POOR

Using these power-plant configurations, cases were run for a variety of temperatures, pressures, power levels, coal types, working-fluid combinations, and component efficiencies. The results are given in the next section.

Results of Analysis

Representative results for the various systems studied are presented in figure 6 in which the COE is plotted versus the overall energy efficiency. A breakdown of the performance results and cost distributions for two representative cases are also given in Tables 8 and 9, respectively.

The solid points on the figure represent the results for the reference conditions identified on the figure. The identifications of the remaining points represent the variations about the reference conditions. The figure shows that the overall energy efficiencies range from 28 to 39.4%, that the contractors' efficiencies are comparable, and the costs differ significantly between the contractors. General Electric's lowest cost of electricity (58 mills/kw-hr) was obtained for the case in which the LBTU gas from an integrated gasifier was burned in a pressurized furnace. However, in this case more than half the total power output is generated by gas and steam turbines in the gasifier-combustor combination and the power produced by the combined cycle of the furnace is relatively inexpensive compared to that of the effectively parallel LMMHD cycle. The all LMMHD cases are seen to result in lower efficiencies and higher costs than the reference points. The figure also shows that the higher efficiencies obtained in the high temperature He/Li systems are accompanied by higher costs of electricity. The results of both contractors show that both performance and economic improvements are realizable if an efficient

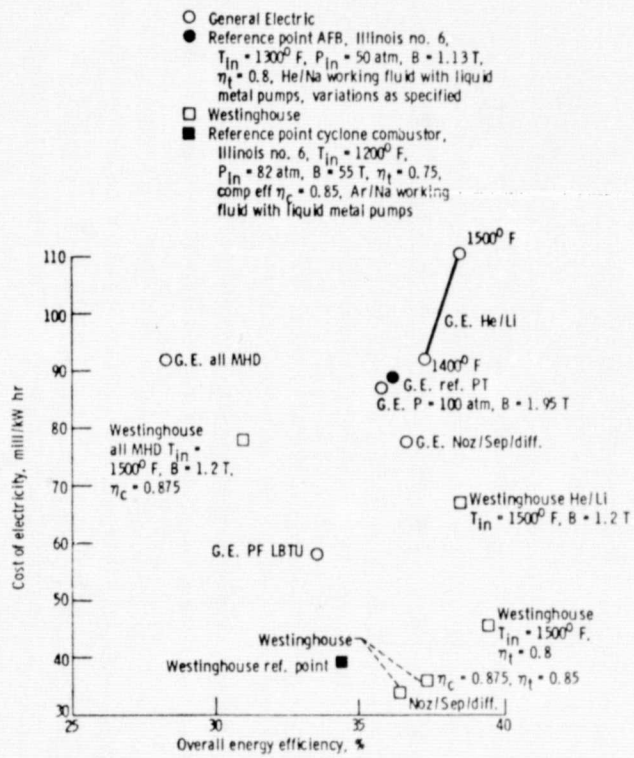

Figure 6. - Cost of electricity versus overall energy efficiency for liquid metal MHD systems.

TABLE 8. - PERFORMANCE RESULTS FOR LIQUID METAL MHD SYSTEMS

	General Electric case 3	Westinghouse case 9
Power output, MWe	972	950
Coal type	Illinois #6	Illinois #6
Furnace type	AFB	Fluid bed cyclone
Furnace efficiency	0.888	0.894
MHD working fluid	He/Na	Ar/Na
MHD inlet temperature, °F	1300	1200
MHD inlet pressure, atm	50	82
MHD isentropic efficiency	0.80	0.85
Steam plant efficiency	0.38	0.395
MHD power output, MWe	1045	765
Compressor power, MWe	826	577
Net steam power output, MWe	0	235
Auxiliary power requirements, MWe	73.7	50
Thermodynamic efficiency	43.8	43.9
Powerplant efficiency	36.2	37.3
Overall energy efficiency	36.2	37.3

nozzle/separator/diffuser combination can be developed and the need for the liquid-metal pumps is eliminated.

Considering the results in Tables 8 and 9, it is seen that the thermodynamic and overall energy efficiencies are comparable for the cases considered and that there is a difference of $1725/kWe between the contractors' costs. The cases chosen (General Electric Case 3, Westinghouse Case 9) have similar power levels and most of the component efficiencies are identical. The General Electric case has a generator inlet temperature of 1300°F, the Westinghouse temperature is 1200°F. The higher MHD generator and steam plant efficiencies used by Westinghouse compensates for the 100°F temperature difference and the thermodynamic efficiencies are nearly identical. The slightly different furnace efficiencies and auxiliary power requirements result in a 1.1 percentage point difference in overall energy efficiency. The Westinghouse cycle arrangement results in a net power output from the steam plant, whereas General Electric matches the steam plant output to the compressor power requirements. The cost data shows that there is a $600/kWe difference in the major component and materials of construction costs and 2.9 mills/kw-hr difference in the operation and maintenance costs.

Discussion and Assessment

The overall energy efficiencies obtained by the contractors for the LMMHD systems are relatively low for an advanced energy conversion system, but they are in good agreement. The real problem is to reconcile the difference in the major component and balance of plant materials costs. A detailed breakdown of these costs[3] shows large differences in nearly every component. Some costs can be reconciled. There are differences of $52/kWe, $161/kWe, and $62/kWe in the costs of the MHD generator-magnet combination, the inverters and primary piping, respectively.

The cost differences for the MHD generator and magnet combinations are mainly due to the different design philosophies used by the contractors. In the General Electric approach, each MHD generator has its own superconducting magnet. A conceptual design for each generator-magnet module was arrived at and costed. The total cost for the system is obtained by multiplying by the number of modules required. In Case 3, 14 modules are sited parallel to each other.

TABLE 9. - CAPITAL COST DISTRIBUTION AND COST OF ELECTRICITY FOR LIQUID METAL MHD POWERPLANTS

	General Electric case 3	Westinghouse case 9
	Capital cost, $/kWe	
Direct cost:		
Major components and balance-of-plant materials	834	266
Direct site labor	150	93
Indirect site labor	135	49
Architect and engineering services	95	29
Subtotal	1214	437
Contingency	243	39
Escalation	488	166
Interest	632	210
Total	2577	852
	Cost of electricity, mills/kW-hr	
Capital	81.5	26.9
Fuel	8.0	7.8
Operation and maintenance	3.8	0.9
Total	93.3	35.6

Westinghouse approached the MHD generator-magnet design in a manner that minimized the major component cost and the amount of liquid metal and high-temperature piping. The MHD generators are arranged in pods concentric to the steam generators. Each pod consists of 4 MHD power modules in a superconducting magnet. The magnetic field uniformity required for each MHD generator is obtained by using iron pole pieces to shape the magnetic fields. The pole pieces are intimately connected to the MHD duct insulating walls and also serve as part of the pressure containment structure. Westinghouse also used a reinforced (ribbed) plate construction for the structured housing for all pressurized components in order to obtain minimum weight designs. Considering the different materials used for the MHD generator structure, the different magnetic fields considered and the design approaches used, the costs of the MHD generator-magnet combinations are understandably different. For an equivalent magnetic field strength, the Westinghouse magnet cost would be about half the cost of the General Electric magnet configuration.

The contractors' inverter costs were $39/kWe for Westinghouse and $200/kWe for General Electric. The main difference between the contractors' inverter costs is that General Electric required the inclusion of direct-current circuit breakers as a protection against short-circuit currents that may accidentally occur. Westinghouse did not require them. The use of these circuit breakers results in smaller power inverter modules which significantly increases the cost per kilowatt inverted. Whether or not these DC breakers are required should be studied in more detail. It is possible that the DC interrupters may not be required for the LMMHD systems, because a short-circuit current could cause the MHD generator to "choke" and hence turn itself off until the problem is rectified. If inverter costs of $200/kWe are truly required for LMMHD systems, they would be at a severe disadvantage when compared with other systems in the same efficiency and temperature range.

It is difficult to reconcile the remaining cost differences. The Westinghouse approach of minimizing the component sizes and amount of high

temperature and liquid-metal piping should result in lower power-plant costs. The General Electric approach with the 14 parallel MHD module arrangement would require excessive amounts of liquid-metal piping and manifolding. However, since the Task 1 effort did not attempt an extensive delineation of the total balance of plant, the cost differences remain unreconciled.

The data in Table 9 shows that the Westinghouse O and M costs are significantly lower than General Electric's. In the Westinghouse calculation of operation and maintenance costs, operation costs are included for the heat rejection, fuel handling and storage, and water treatment systems only. Consequently, it is felt that the Westinghouse operation and maintenance costs are underestimated for a power plant as complex as the LMMHD systems considered in this study. Indeed, the O and M costs listed in Table 9 are the same as those for the Westinghouse advanced-steam systems.

The General Electric costs can be reduced by optimizing the design and arrangement of the system components and even eliminating some of the components. For instance the helium precooler and recuperator could be eliminated from the General Electric system with little effect on the overall system efficiency. The net effect of the economic optimization cannot be ascertained at this time. However, it's reasonable to assume that this plant will not be cheaper than a steam plant. Consequently, it must be shown that higher overall energy efficiencies can be obtained if this system is to warrant further consideration.

At the temperature limits dictated by present sodium technology (1200-1300°F), the highest overall energy efficiency presented by the contractors was 37.3%. An inspection of the contractors' results indicates that the maximum potential efficiency at these temperatures would be 40%. This is assuming a generator isentropic efficiency of .80, the development of a highly efficient nozzle/separator/diffuser, and optimistic system component efficiencies. The overall energy efficiency is limited to this value at these temperatures because the liquid-metal MHD system cannot be effectively coupled to an advanced high efficiency steam plant. Due to a pinch point problem in the steam boiler, both contractors found that the highest LMMHD/steam system efficiencies were obtained by using a steam plant with minimal regenerative feedwater heating and with the steam reheat energy being supplied by the combustor. The adverse effect of this coupling is twofold. The thermodynamic efficiency of the steam bottoming plant is limited to 39%, and the system does not derive the full benefit of the topping cycle, because a portion of the combustion energy is transferred directly to the steam plant.

At the higher temperatures considered in this study (1500°F), these problems may be alleviated. Westinghouse has calculated an overall energy efficiency of 43% assuming that the sodium technology was extended to 1500°F, and that the system could be coupled to a 45% steam plant. The sodium vapor carryover, however, could be a considerable problem at these temperatures. This problem can be avoided by using lithium. The 1400-1500°F Li/He plants studied had slightly lower efficiency than a Na/A plant at the same temperature and also significantly higher COE.

VI. Comparison of MHD Systems With Alternative Plants Studied

In this section the MHD systems studied in Task 1 and the open-cycle MHD system studied in Task 2 are compared with the other plants studied in the two respective tasks. Data are taken from the contractors' Task 1 final reports[1,2], the NASA Task 1 final report[3], and the contractors' "briefing documents" for Task 2[5-7].

Figure 7 is a plot of the COE (mills/kw-hr) vs. overall energy efficiency (coal pile to a.c. bus bar) for the Task 1 data. Since Task 1 involved hundreds of parametric data points, only ranges of costing and performance are shown. A Task 1 reference steam system (conventional furnace with 3500 psi/1000°F/1000°F steam conditions) is also cited on the graphs of figure 7 and a set of coordinate axis drawn through this reference point. Data are plotted on two separate graphs, one for G.E. and one for Westinghouse.

Power plants located in the lower right-hand quadrant of the graphs of figure 7 are the most desirable, being lower in COE and higher in efficiency than the reference steam plant. Only a few combined cycle (LBTU integrated gasifier) points by G.E. (figure 7a) actually fall in this quadrant. The Westinghouse LBTU combined cycle has a COE slightly above the reference steam plant. In the two cases, the efficiency is, respectively, one and five percentage points above the conventional steam plant.

Points in either the lower left-hand quadrant or the upper right-hand quadrant of figure 7 are the next most attractive points. Additional points for the G.E. combined cycle (LBTU gasifier) appear within the lower left quadrant at COE values lower than the reference steam plant and at efficiencies competitive with steam. Both G.E. and Westinghouse have advanced steam plants which essentially surround the reference steam plants. G.E. has both open-cycle gas turbine (high BTU fuel) and combined cycle (clean fuel) points in the lower left quadrant with low COE, but efficiencies much lower than the reference steam.

In the upper right-hand quadrant, four plants are shown with efficiencies better than the advanced steam and with COE's not much greater than the reference steam. These plants are: liquid metal rankine/steam plant, OCMHD/steam bottoming plant, CCMHD/steam plant, and high-temperature fuel cell with steam bottoming (Westinghouse). The LMMHD system appears in this quadrant, but with efficiency values lower or at best comparable to the advanced steam plant and COE's that are much higher.

In the Westinghouse data of figure 7b, the molten carbonate fuel cell/steam bottoming plant is in the desirable range of the upper right-hand quadrant. Westinghouse examined the molten carbonate fuel cell in much greater detail than G.E. However, the 31 mill/kw-hr point shown in figure 7b was calculated by NASA[3] using the technical and costing base of Westinghouse, but assuming that a 30,000 to 50,000 hour operating life could be achieved in molten carbonate fuel cell operation. Westinghouse assumed that maximum life was 10,000

REPRODUCIBILITY OF THE ORIGINAL PAGE IS POOR

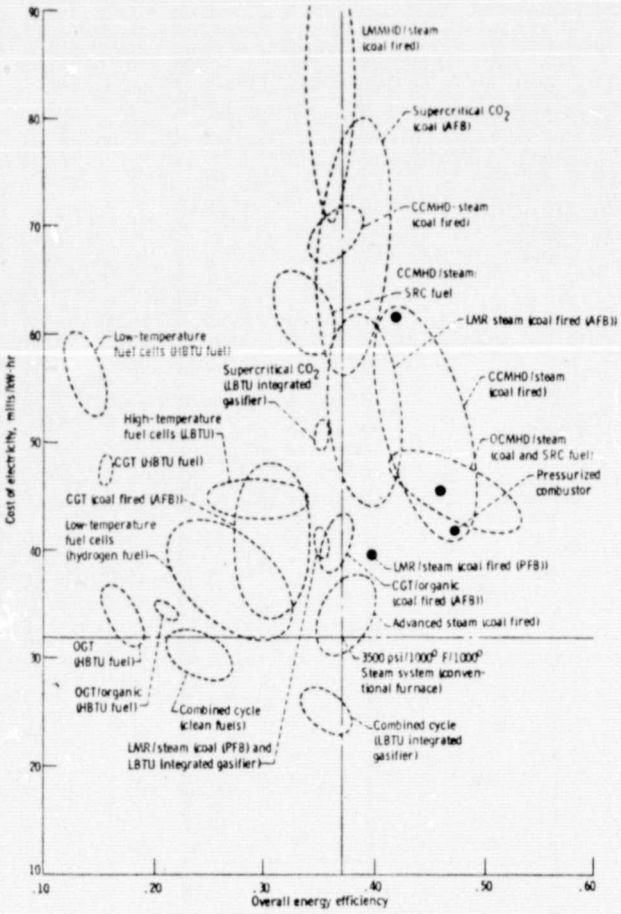

(a) General Electric results.

Figure 7. - Effect of overall energy efficiency on cost of electricity - comparison of systems for Task I.

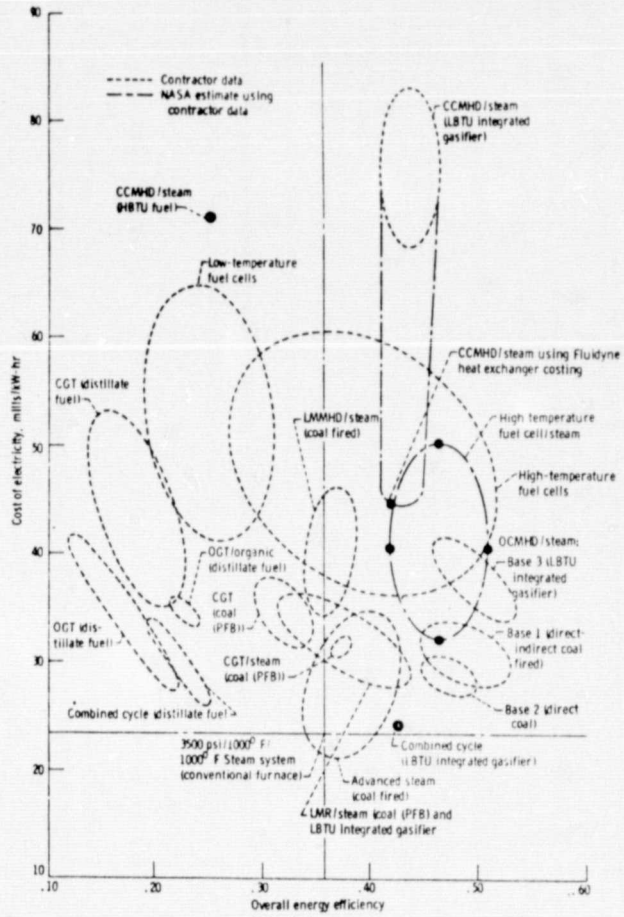

(b) Westinghouse results.

Figure 7. - Concluded.

hours which is the highest level of actual operating life achieved to date. No technical barriers are foreseen in achieving 30,000 to 50,000 hours of life.

From the data of figures 7a and 7b, the advanced steam plants, the combined-cycle plants (LBTU integrated gasifier), the high-temperature fuel cell/steam plants, the open-cycle MHD/steam plants and closed-cycle MHD/steam plants appear to offer the promise of improved efficiency with a very moderate increase or decrease in the COE compared to the reference steam plants. All of these systems were carried into Task 2 with the exception of closed-cycle MHD/steam plant. The more attractive G.E. CCMHD points were generated as part of an iteration of the Task 1 studies which was conducted in conjunction with the Task 1 review. This occurred concurrently with the Task 2 effort. The re-examination by NASA of the ceramic heat exchanger costs of Westinghouse in their CCMHD was also completed during the Task 1 review.

The data presented in this section indicates that CCMHD/steam bottoming needs to be analyzed at a Task 2 level of effort. The data has also shown that the 1200-1500°F LMMHD is much higher in COE than advanced steam plants and either a slight bit lower or at most competitive in efficiency.

In figures 8a through 8d the data for the 11 Task 2 conceptual plants are presented showing the sensitivity of COE to the various economic ground rules. Analysis and evaluation of the data from the three contractors represented (G.E., Westinghouse, United Technologies Corp./Burns and Roe) is presently underway at NASA. Differences in cost due to different costing and account procedures are present in the figure 8 data. The reader should, therefore, be cautious in comparing plant COE's, particularly between plants estimated by different contractors.

In figure 8a the data is displayed as costed by the contractors. A common "start-of construction" date (1975½) is assumed for all power plants. One plant, the Westinghouse combined cycle with semi-clean liquid fuel appears to offer a lower COE than the various steam plants displayed and with no penalty in overall energy efficiency. Three other plants, the OCMHD/steam bottoming, the Westinghouse combined cycle/LBTU integrated gasifier and the UTC molten carbonate fuel cell/steam bottoming plant have the potential of high efficiency (46.8% to 50%) with a COE (nominally 30 mills/kw-hr) very competitive with the steam systems shown. Both the closed-cycle gas turbine/organic bottoming and the potassium topping plants have significantly higher COE's. Potassium topping plants do, however, have an overall energy efficiency of 44.3 percent.

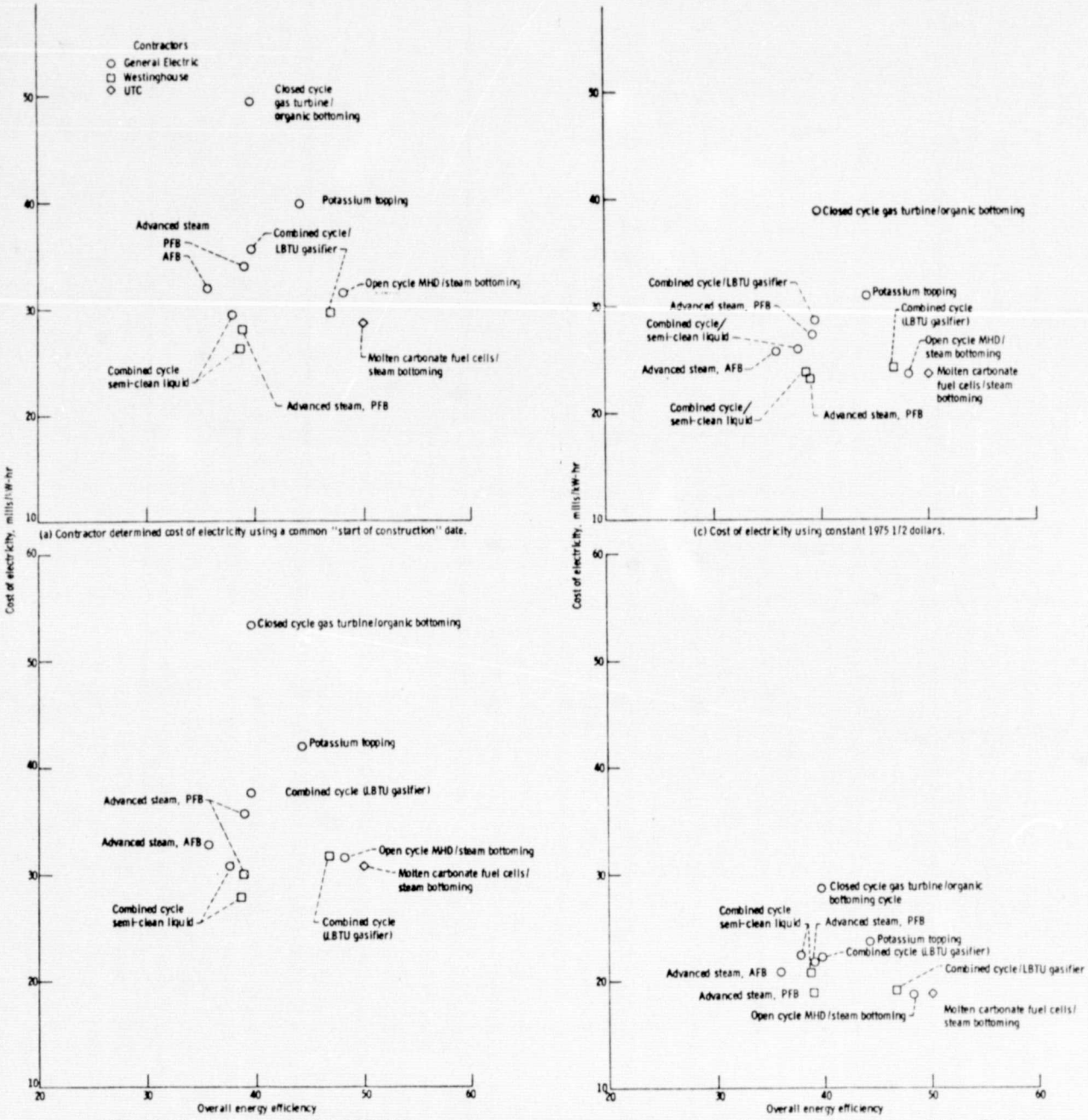

(a) Contractor determined cost of electricity using a common "start of construction" date.

(b) Cost of electricity using a common "end of construction" date.

(c) Cost of electricity using constant 1975 1/2 dollars.

(d) Average cost of electricity for 30 year plant lifetime in constant dollars (1975 1/2) assuming an inflation rate of 0.0325 per year.

Figure 8. - Effect of economic ground rules on the cost of electricity for ECAS - Task 2 results.

Figure 8. - Concluded.

Figure 8b when compared to 8a shows the sensitivity of COE to "construction time" assumptions. In figure 8b a common "end-of-construction" time (1982) is assumed compared to the common "start-of-construction" used in figure 8a. This assumption postpones start of construction longer for the shorter construction time plants and thus raises their COE. As a result, the COE's of the Westinghouse combined cycle/LBTU gasifier and the UTC molten carbonate fuel cell/steam plants increase to the level of the G.E. OCMHD/steam plant. These former two systems have 5-year construction times compared to $6\frac{1}{2}$ years for OCMHD. Using a common "end-of-construction" date results in relatively more attractive COE for capital intensive plants having longer construction time since procurement actions are initiated at earlier (less inflationary) times.

In figure 8c COE is plotted using constant $1975\frac{1}{2}$ dollars. This removes the escalation from capital cost (the ECAS study has no escalation for fuel or for operation and maintenance). Hence both the higher capital cost and more efficient

REPRODUCIBILITY OF THE ORIGINAL PAGE IS POOR

plants appear relatively more attractive. The OCMHD, the Westinghouse combined cycle/LBTU gasifier and the molten carbonate fuel cell/steam bottoming plants remain tightly competitive with each other, and are in the low 20 mill/kw-hr range. This is competitive with the Westinghouse PFB steam and the Westinghouse combined cycle/semi-clean liquid fuel plants. This latter plant is higher in COE in figure 8c than the Westinghouse PFB steam plant because it is low in capital cost compared to the PFB advanced steam.

Figure 8d assumes a plant life of 30 years and that, after construction, fuel and operation and maintenance inflate at the rate of 3.25% per year. The COE shown is the average over the 30-year plant lifetime, expressed in 1975½ dollars. Again the three high efficiency plants appear to offer a COE competitive with each other and nearly identical to the Westinghouse advanced (PFB) steam plant.

The G.E. OCMHD/steam plant, the Westinghouse combined cycle/LBTU integrated gasifier plant, and the UTC molten carbonate fuel cell/steam plant have overall energy efficiencies between 46.8 and 50% and similar COE. This holds true even as the economic ground rules are varied as shown in figure 8. For the average 30-year COE case (figure 8d), these high-efficiency systems appear to have particularly attractive COE's. The reader is again strongly cautioned from making other than very gross comparisons in COE values generated by different contractors. A detailed study of the relative comparability of contractors' costs has not been completed. As previously indicated, comparability between contractors in Task 2 should be somewhat better than in Task 1, but in Task 1 Westinghouse costs were generally substantially lower than G.E. costs.

COE for various plants studied by a single contractor should be comparable on a common basis. For the seven plants studied by G.E., the OCMHD plant had the highest overall efficiency. It was four percentage points higher than the next highest efficiency plant, the potassium topping cycle. For both the constant 1975½ dollar case and the average lifetime COE case (figures 8c and 8d), the G.E. OCMHD plant had the lowest G.E. COE. For these cases the G.E. AFB advanced steam had the next lowest COE (1.9 and 2.2 mills higher than OCMHD, respectively). This AFB plant was, however, 12.5 percentage points lower in efficiency than the OCMHD plant. For the other cases shown in 8a and 8b, common start and common end of construction, the OCMHD plant had the second lowest COE. For these cases, the G.E. semi-clean liquid-fuel water-cooled combined-cycle plant had the lowest COE (2.0 and 0.7 mill lower than OCMHD, respectively). This combined cycle plant was, however, 10.5 percentage points lower in efficiency than the OCMHD plant.

VII. Conclusions

1. The open-cycle MHD system appears to have the potential of approaching a 50 percent coal-pile-to-bus-bar efficiency with a competitive cost of electricity: An efficiency of 48.3% was obtained for the G.E. Task 2 conceptual plant with the average plant lifetime COE being the lowest of all plants studied in Task 2.

2. The Task 1 and 2 open-cycle MHD studies have identified a number of specific subsystems for which additional technology development is required to reduce costing uncertainties and for which additional studies of alternative approaches may have a high probability of increasing the plant efficiency or lowering COE.

3. The closed-cycle MHD studies, particularly those completed during the Task 1 review, indicate that these systems may have the potential of approaching the open-cycle MHD systems in both efficiency and cost. These results indicate that additional closed-cycle MHD investigations appear warranted and also which general types of plants should be investigated in future system studies.

4. The liquid-metal MHD studies indicate that these plants have a somewhat limited efficiency and cost of electricity potential. For the temperature range studied (1200-1500°F), they have significantly higher cost of electricity and at best only equal efficiency to the advanced steam plants investigated. Higher temperature Li/He systems would have higher efficiency, but even the 1400-1500°F Li/He plants studied have COE's substantially above the low temperature Na/A plants.

5. The Task 2 studies indicate that only the combined-cycle plant with an advanced well integrated gasifier and the high-temperature fuel cell topped steam plant appear to have the potential of achieving both overall energy efficiencies and COE's in a range competitive to the open-cycle MHD plant.

VIII. References

1. "Energy Conversion Alternatives Study - ECAS - Phase 1", 1976, General Electric Company, also CR-134948, NASA.

2. "Energy Conversion Alternatives Study - ECAS - Phase 1," Volumes 1-12, 1976, Westinghouse, also CR-134941, NASA.

3. "Comparative Evaluation of Phase 1 Results from the Energy Conversion Alternatives Study (ECAS)", TM X-71855, 1976, NASA.

4. "Energy Conversion Alternatives Study - Utilities Practices Handbook", Vols. 1 and 2, 1975, Burns and Roe, Inc., Hempstead, NY.

5. "Study of Advanced Energy Conversion Techniques for Utility Applications Using Coal or Coal-Derived Fuels - Oral Briefing Document on the Results of Task 2", 1976, General Electric Company, Schenectady, NY.

6. "Energy Conversion Alternatives Study (ECAS) Westinghouse Phase 2 Oral Report", 1976, Westinghouse Electric Corporation.

7. King, J. M.: "Energy Conversion Alternatives Study (ECAS) Integrated Coal Gasification/Molten Carbonate Fuel Cell Power Plant Conceptual Design Briefing," 1976, United Technologies, South Windsor, Conn.

8. Phen, R. L.; Hays, L. G.; and Alper, M. E.: "Liquid Metal Magnetohydrodynamics (LMMHD) Technology Transfer Feasibility Study. Volume 1: Summary", JPL-1200-59-Vol-1, 1973, Jet Propulsion Lab., Pasadena, California; also CR-136197, NASA.

REPRODUCIBILITY OF THE ORIGINAL PAGE IS POOR